

CH 6

Compact Handler

ENGINEERED ACCESS & LIFTING

One machine. Multiple jobs.

Attachments replace the manual pull-out. The rated load limiter detects which attachment is installed and sets the load parameters itself.



Hook
6,000 lb



Forks
2,500 lb



Glass lifter
1,100 lb



Jib
1,000 lb



Man basket
500 lb



Winch
3,000 lb



Pipe handler
Load chart available upon request

Machine specifications.

Two telescoping sections and a manual pull-out, 34.5 in wide for single-door access.

6,000 lb
HOOK CAPACITY
BOOM AND PULL-OUT
FULLY RETRACTED

15′ 10″
HOOK HORIZONTAL REACH
BOOM LEVEL, FULLY EXTENDED,
PULL-OUT EXTENDED

24′
MAX HOOK HEIGHT · VERTICAL
BOOM FULLY RAISED,
FULLY EXTENDED,
PULL-OUT EXTENDED

7
ATTACHMENTS
AUTO-DETECTED

24 V
ALL ELECTRIC

1.75 mph
DRIVE SPEED, UP TO

SPECIFICATIONS

Boom	3 sections · 1 fixed, 2 telescoping · manual pull-out
Hook horizontal reach	about 15′ 10″ · boom level and fully extended, pull-out extended
Hook height	about 24′ vertical · boom fully raised and extended, pull-out extended
Power	24 V electric · 7 HP motor drives the hydraulic pump
Drive	2 front wheels · hydraulic motors
Drive speed	up to 1.75 mph (2.8 km/h)
Steering	Rear wheel · turns ±80° from straight ahead
Brakes	2 · spring applied · hydraulic release
Weight	5,700 lb (2,590 kg)

CONTROLS & SAFETY

Rated load limiter
Shows rated and actual load. At rated load, an alarm sounds and boom raise and boom extend stop.

Progressive function control
Slows drive and lift with steering angle, boom height and reach, and load near limit.

Enhanced stability package
Option. Required for the man basket, and for forks above 12 ft vertical fork height.

Attachment auto-detect
Sets the load parameters for the attachment installed.

Radio remote control
Proportional joysticks, 2-speed HI/LOW for slow, precise moves.

Class I, Division 2
Option. EE certification for hazardous locations.

Hook

6,000 lb RATED CAPACITY

CH 6 · Hook

RAISE & EXTEND

↑	BOOM	+20°
	EXTEND	0.0 ft
	PULL-OUT	0.0 ft

The hook hangs plumb · the pinned pull-out adds 5 ft of boom



WATCH VIDEO · 0:25

Hook
up to 6,000 lb

Versatile lifting in tight corners. Max 2,300 lb on the extended pull-out.

HOOK

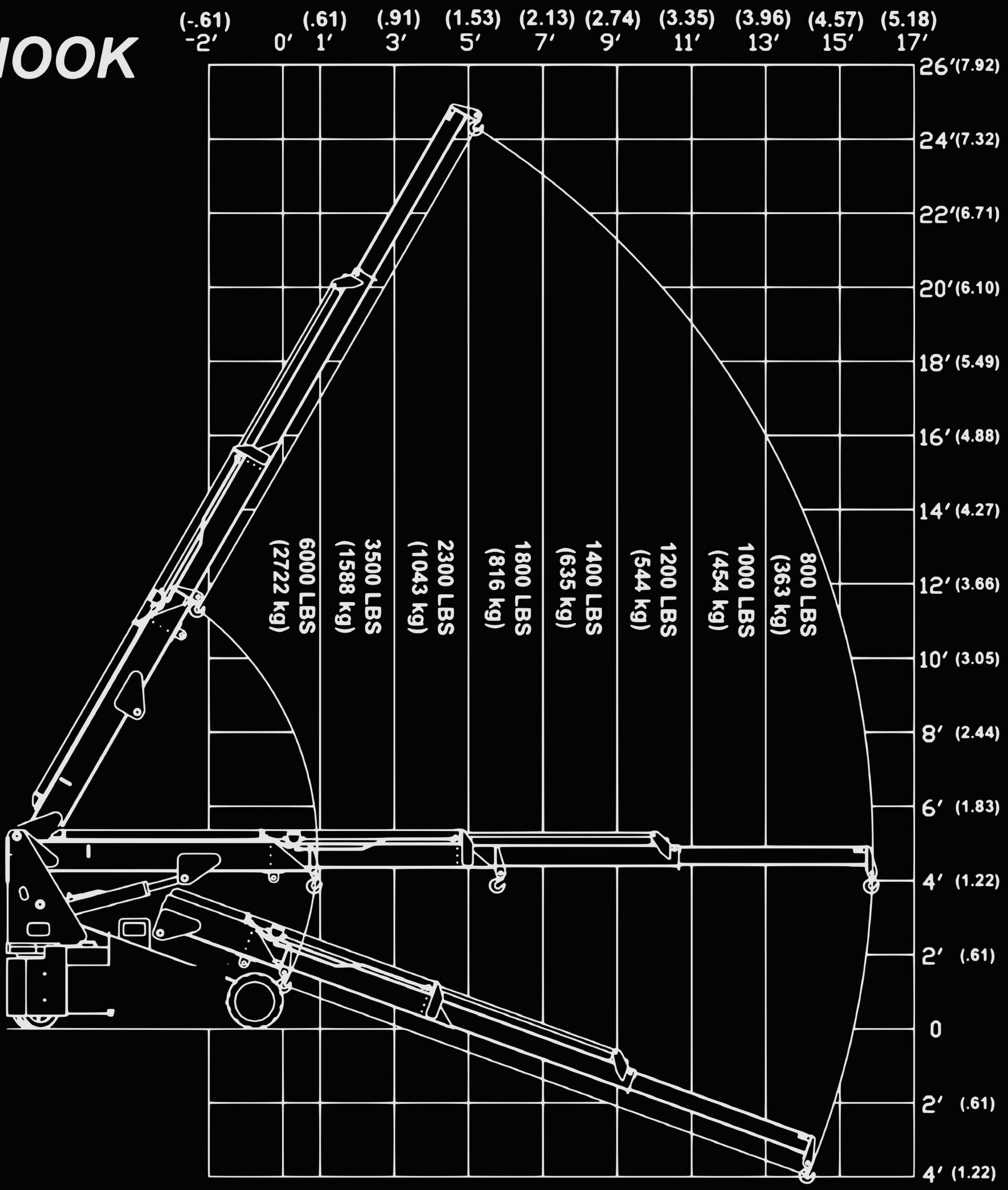

Rated capacity by horizontal reach (across, from the front of the tire) and vertical height (up). The rated load limiter shows the capacity at the current boom position.

Max load on the pull-out when extended: 2,300 lb (1,043 kg).

Forks

2,500 lb RATED CAPACITY

CH 6 · Forks

AUTO-LEVEL

↑	BOOM	+20°
	EXTEND	0.0 ft
↓	TIP TO BOOM	−20°
	FORKS	0° · LEVEL

The power tip keeps the forks level as the boom moves



WATCH VIDEO · 0:19

Forks
up to 2,500 lb

42 in forks. Enhanced stability package required above 12 ft vertical fork height.

FORKLIFT

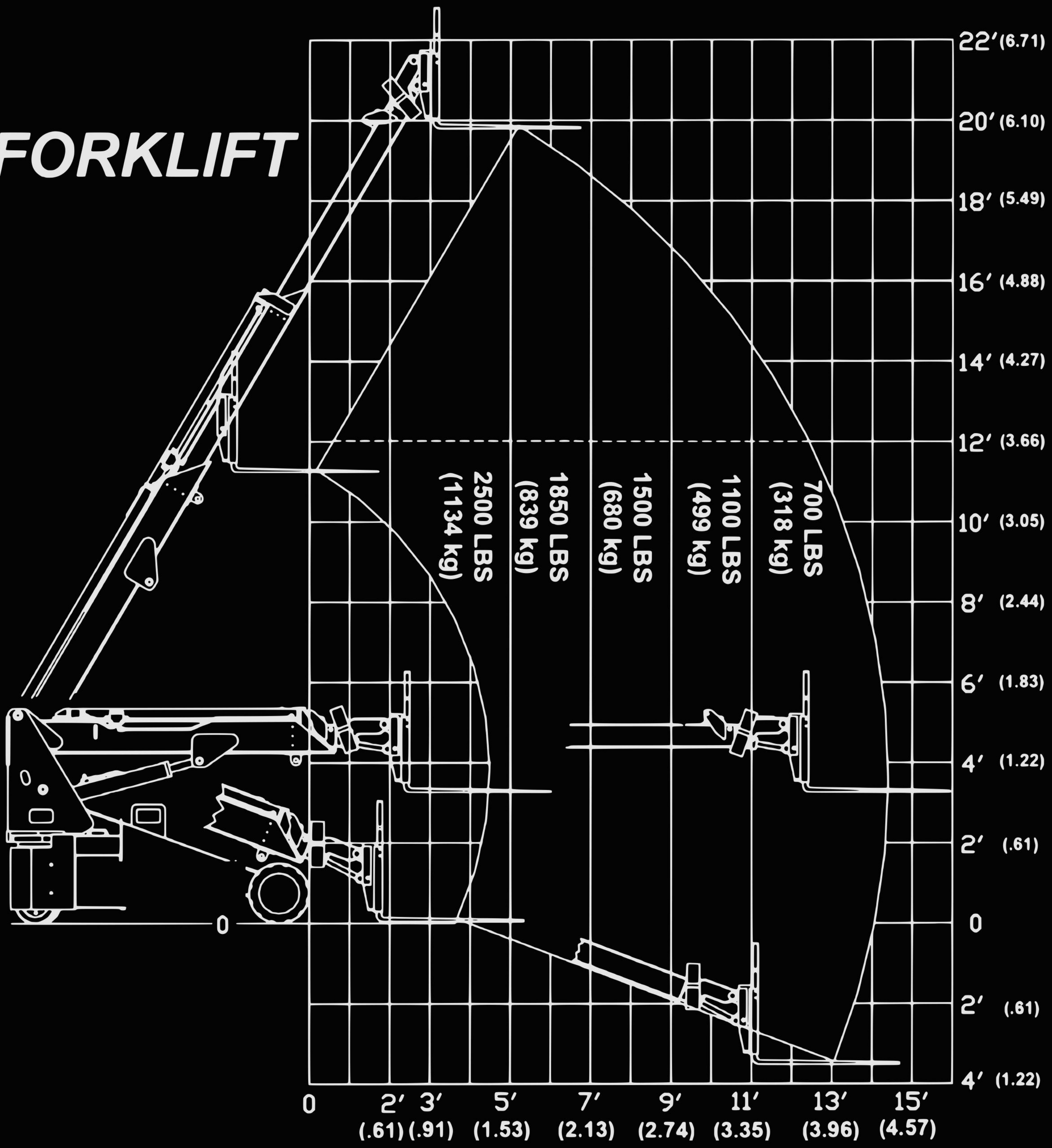

Rated capacity by horizontal reach (across, from the front of the tire) and vertical height (up). The rated load limiter shows the capacity at the current boom position.

Above the dashed line (12 ft vertical fork height), the enhanced stability package must be installed.

Glass lifter

1,100 lb RATED CAPACITY

CH 6 · Glass lifter

AUTO-LEVEL

↑ BOOM	+20°
EXTEND	0.0 ft
↓ TIP TO BOOM	−20°
GLASS	0° · LEVEL

The power tip keeps the glass level as the boom moves



WATCH VIDEO · 1:09

Glass lifter
up to 1,100 lb

3-axis manipulator: raises and lowers the glass 90° each way, turns it 90° left and right at the wrist, and spins it 90° each way (180° total). Free-rotate valves for hand positioning.

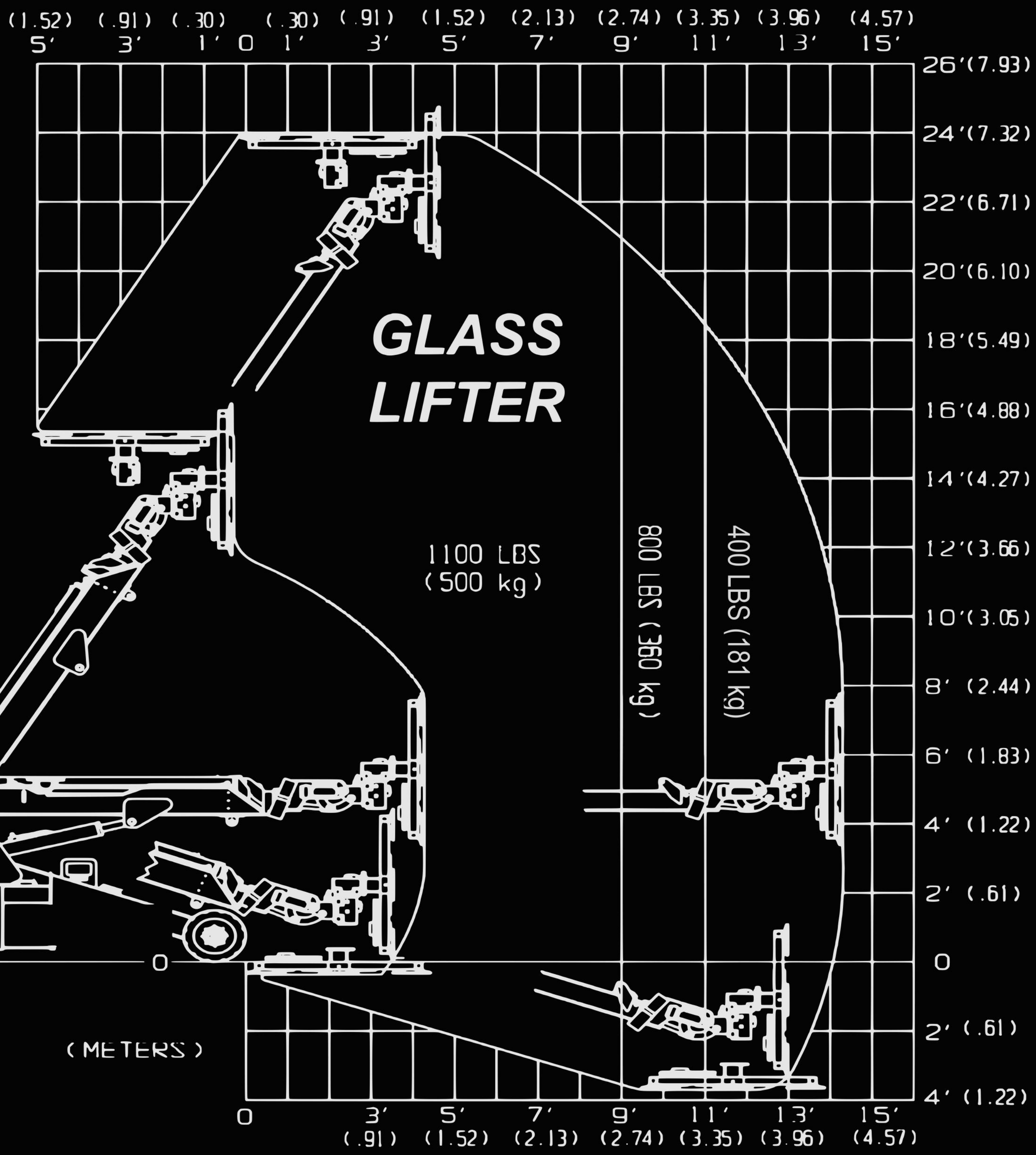

Rated capacity by horizontal reach (across, from the front of the tire) and vertical height (up). The rated load limiter shows the capacity at the current boom position.

Jib

1,000 lb RATED CAPACITY

CH 6 · Jib

AUTO-LEVEL

↑	BOOM	+20°
	EXTEND	0.0 ft
↓	TIP TO BOOM	−20°
	JIB	0° · LEVEL

The power tip keeps the jib level as the boom moves



Jib
up to 1,000 lb

WATCH VIDEO · 0:19

JIB

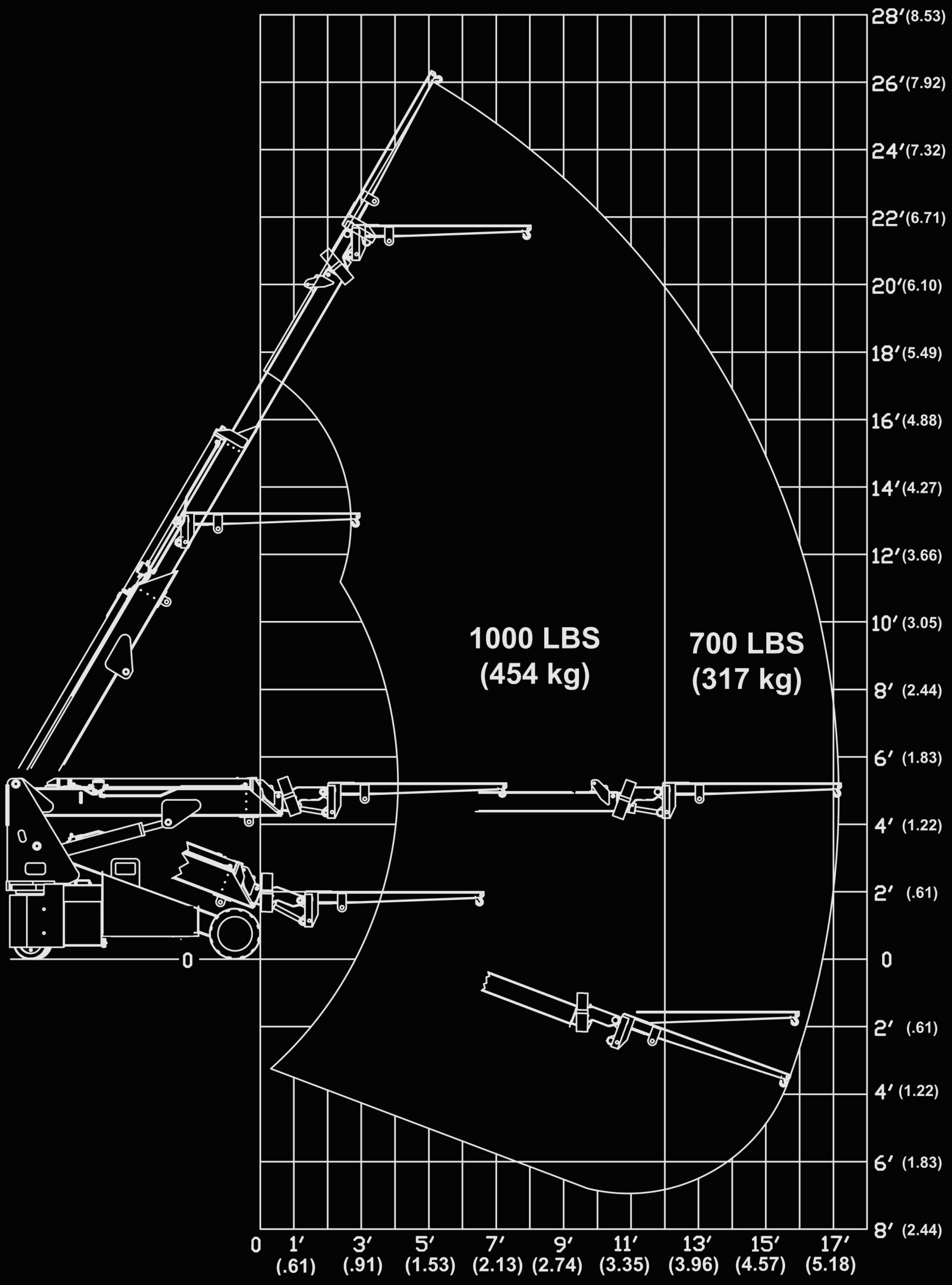

Rated capacity by horizontal reach (across, from the front of the tire) and vertical height (up). The rated load limiter shows the capacity at the current boom position.

Man basket

500 lb RATED CAPACITY

CH 6 · Man basket

AUTO-LEVEL

↑	BOOM	+20°
	EXTEND	0.0 ft
↓	TIP TO BOOM	−20°
	BASKET	0° · LEVEL

Basket stays level · enhanced stability package required



WATCH VIDEO · 0:19

Man basket
500 lb

Enhanced stability package required.

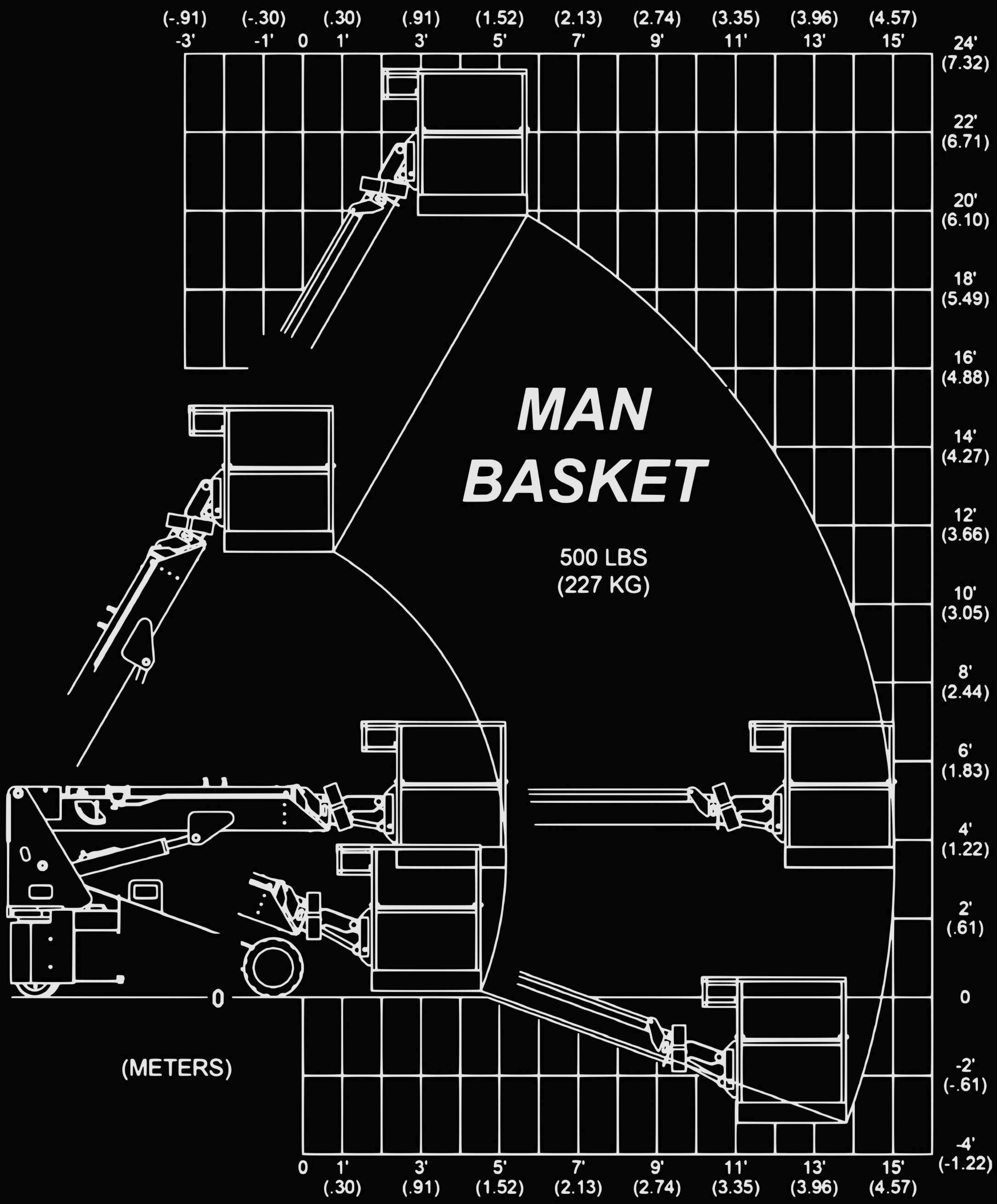

Rated capacity by horizontal reach (across, from the front of the tire) and vertical height (up). The rated load limiter shows the capacity at the current boom position.

The enhanced stability package must be installed.

Winch

3,000 lb RATED CAPACITY

CH 6 · Winch

RAISE · EXTEND · HOIST

↑	BOOM	+21°
	EXTEND	0.0 ft
	ROPE OUT	0.0 ft

The winch pays out and hauls in the wire rope



Winch
up to 3,000 lb

WATCH VIDEO · 0:27

HOIST WINCH

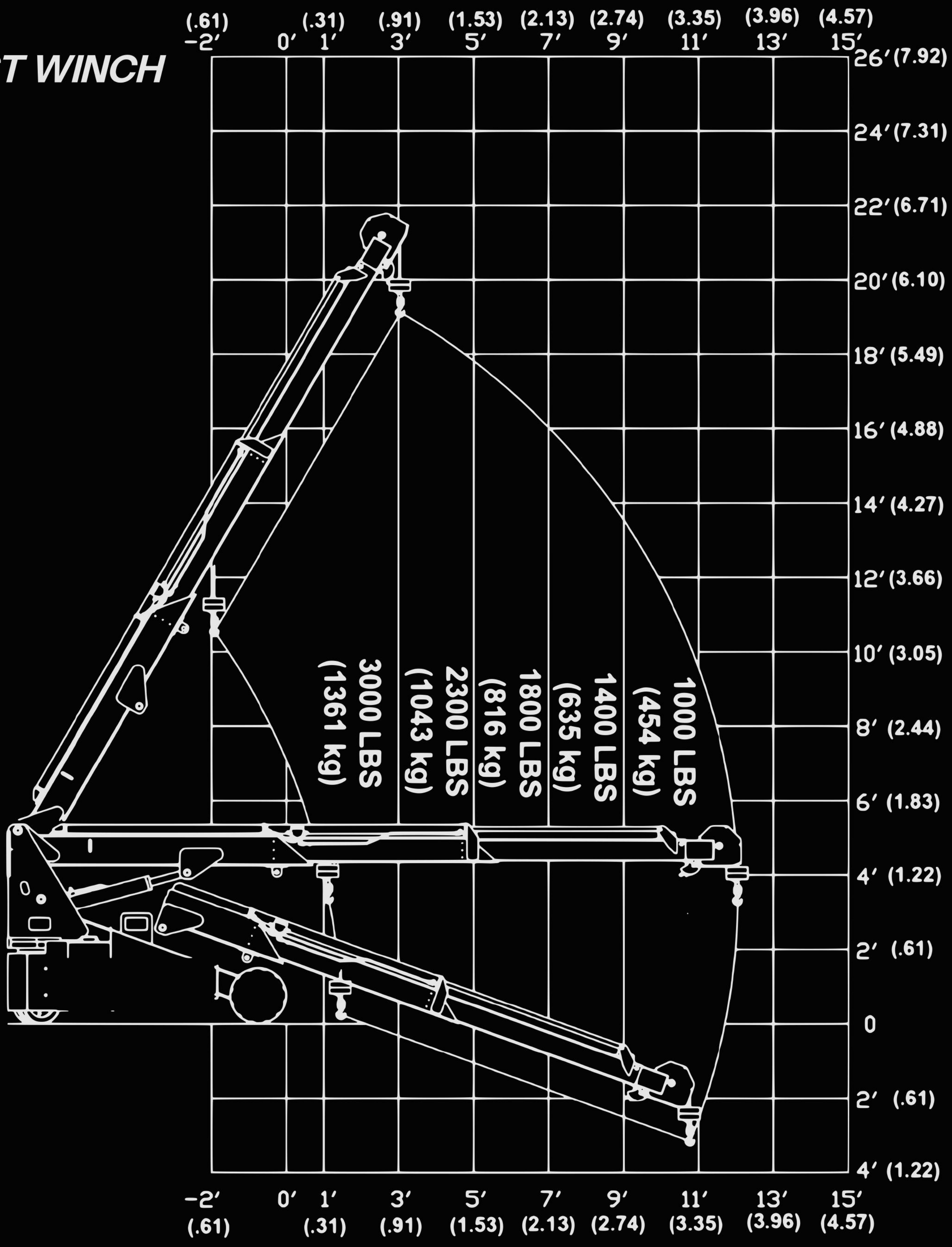

Rated capacity by horizontal reach (across, from the front of the tire) and vertical height (up). The rated load limiter shows the capacity at the current boom position.

Pipe handler

Load chart available upon request.

CH 6 · Pipe handler

AUTO-LEVEL

↑	BOOM	+20°
	EXTEND	0.0 ft
↓	TIP TO BOOM	–20°
	HANDLER	0° · LEVEL

The power tip keeps the pipe handler level as the boom moves



WATCH VIDEO · 1:16

Pipe handler

Grips pipe, light poles, mullions and beams. 3-axis head: raise / lower, wrist and spin, plus clamp / unclamp.

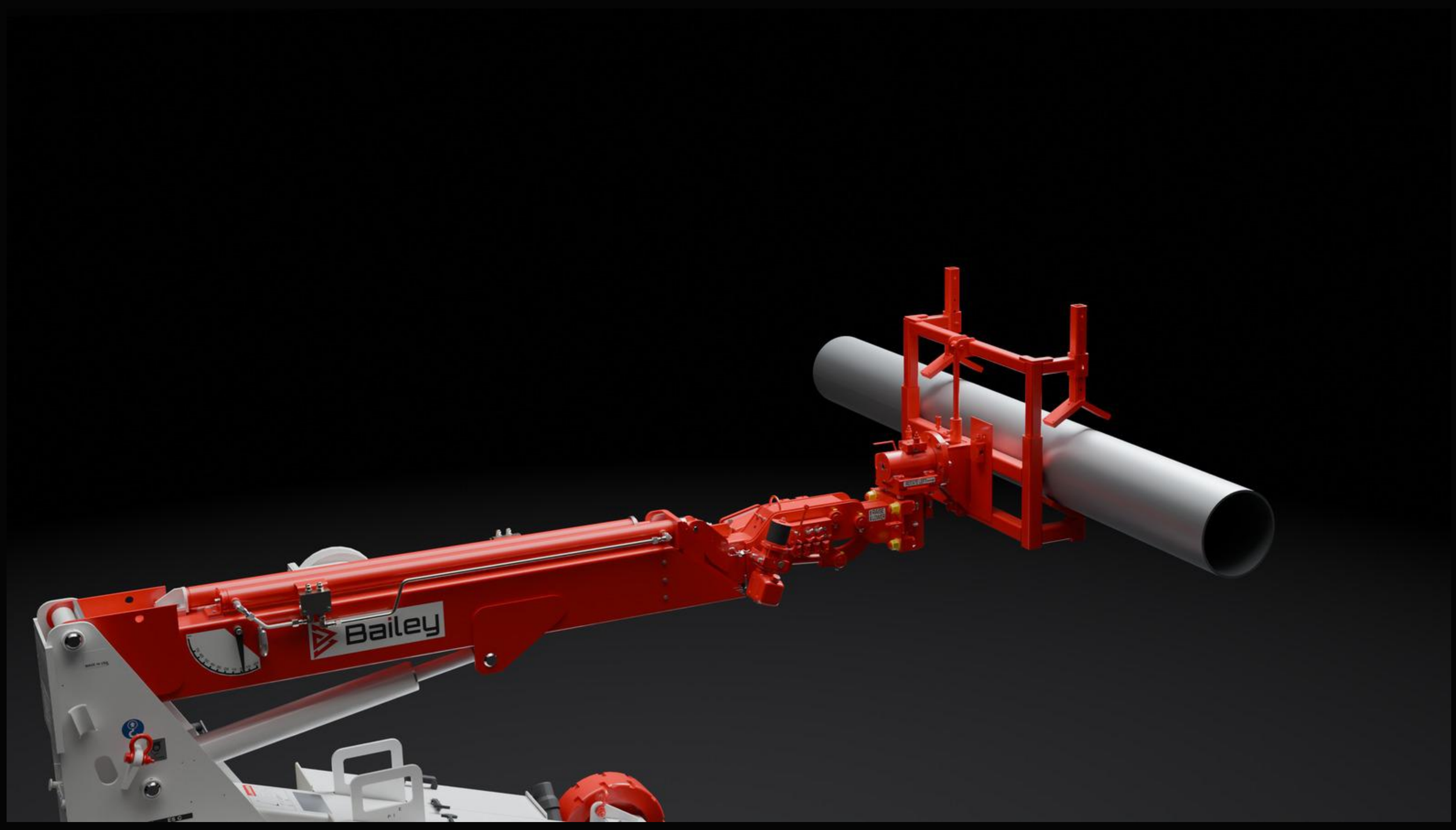



Load chart available upon request.

Bailey | Engineered Access & Lifting

TRUSTED BY

BOEING · DPR CONSTRUCTION · NASA · LOCKHEED MARTIN · NORTHROP GRUMMAN · Raytheon An RTX Business · U.S. AIR FORCE · AIRBUS



20+ years

Engineered lifting solutions for more than two decades.

Custom built

Built for what standard equipment can't handle.

Mission critical

Aerospace, defense, cleanroom and industrial sites.

Let's get to work.

Tim Cooley

262-744-7893 · tim@baileycranes.com

baileycranes.com

Bailey | Engineered Access & Lifting

SBA U.S. Small Business Administration — SERVICE-DISABLED VETERAN-OWNED CERTIFIED

ISO 9001:2015 REGISTERED MANUFACTURER · MUSKEGO, WISCONSIN

Specifications subject to change