gear TECHNOLOGY INDIA

VOLUME 4, ISSUE 5, 2026
September Edition

www.geartechnologyindia.com

LMT TOOLS INDIA – STRENGTHENING INDIA'S GEAR MANUFACTURING CAPABILITIES

An Exclusive Conversation with
Mr Ramakant Reddy, Managing Director,
LMT Tools India Pvt. Ltd.

COVER STORY- CUTTING TOOLS

MOTION + POWER
MANUFACTURERS ALLIANCE™
American Gear Manufacturers Association
ABMA American Bearing Manufacturers Association

LMT • TOOLS

BELIN
FETTE
KIENINGER
ONSRUD

High Performance Gear Cutting Tool Solutions

lmt.in@lmt-tools.com
+91 2135 614960

www.lmt-tools.com

India's only trade fair for Maintenance, Reliability & Asset Management

MRAM EXPO 2026

7 8 9 October 2026

Hall 2, Bombay Exhibition Center, Mumbai

EXPO ⬧ CONFERENCE ⬧ WORKSHOP

Find
Solutions.

Build
Connections.

Transform
Operations.

Concurrent Events

- Conference
- Buyer Seller Programme
- Workshops

Our Partners

Diamond Partners

IRISS ENGINEERED RELIABILITY | ABB

Gold Partners

ImageGrafix Computer Solutions for Engineers | SPM condition monitoring solutions

Knowledge Partner

COUNCIL OF VIBRATION SPECIALISTS

Podcast Partner

RED TALKS

Supporting Associations

AOCP Association of Corrosion Professionals | IAM The Institute of Asset Management India | iipe | MSI | SOPEP | ESARA

Scan to Visit

www.mramindia.com

For More Info Contact :

Niketh Kumar Mandal | Project Director
+91 99452 16539 | niketh@virgo-comm.com

Organised By

virgo COMMUNICATIONS AND EXHIBITIONS (P) LTD

250 Virgo House, 7th Main, Amarjyoti Layout,
Domlur Extension,Bangalore 560 071
www.virgo-comm.com

Anitha Raghunath
Director / Publisher
Virgo Communications and Exhibitions Pvt.Ltd

Dear Readers,

Gear and allied industries continue to evolve with new technologies, smarter processes and innovative approaches to production. In the current edition of Gear Technology India, we bring together the ideas, innovations, and industry developments driving this evolution.

With Cutting Tools as the central theme, our cover story features an exclusive conversation with Mr Ramakant Reddy, Managing Director, LMT Tools India Pvt. Ltd., offering insights into strengthening India's gear manufacturing capabilities and addressing the changing requirements of modern production.

This edition also introduces a New Column, adding a fresh perspective to our editorial coverage. Our Campus to Industry section continues to connect academic learning with real-world manufacturing, highlighting emerging ideas and opportunities for the next generation of engineers.

We also highlight a significant industry milestone as Bevel Gears India (BGI) celebrates 50 years, marking five decades of growth and engineering expertise. Its new dedicated aerospace facility in Bengaluru reflects the company's expanding capabilities and growing focus on the aerospace sector.

The issue further covers developments across aerospace, heat treatment, inspection and metrology, AI-driven quality control, machining, research and technology innovation, and industry events.

Through this edition, we aim to bring our readers closer to the technologies, people and ideas driving progress across the gear and power transmission industry.

Warm regards,

Sushmita Das
Associate Editor
Gear Technology India

Precision, productivity and process reliability remain central to modern gear manufacturing. From tool geometry and coating technology to heat treatment, inspection and process monitoring, every stage of production has a direct bearing on gear accuracy, surface quality, tool life and manufacturing cost.

In this edition of Gear Technology India, Vol 4, Issue 5(2026), we focus on **Cutting Tools** and the technologies supporting improved machining performance. Our **cover story features an exclusive conversation with Mr Ramakant Reddy, Managing Director, LMT Tools India Pvt. Ltd.**, covering the changing requirements of gear manufacturers and the importance of tool technology in achieving higher productivity and consistent quality.

The issue features technical articles straight from the experts on **PVD coatings, vacuum heat treatment of cutting tools, and ceramic machining and honing, covering wear resistance, thermal stability, tool life, surface finish**, and process efficiency. We also look at AI-driven inspection and its application in quality control for gear manufacturing, along with research into early gear-wear detection using topological methods.

Another notable feature is **Bevel Gears India's 50-year journey**, along with its new dedicated aerospace facility in Bengaluru. The development reflects the increasing requirements for precision gearing in aerospace applications, where dimensional accuracy, material performance and process consistency are critical.

Readers can also find a **New Column** in this edition, while **Campus to Industry** continues to provide a link between engineering education and industrial applications.

With contributions covering cutting tools, aerospace, heat treatment, inspection, metrology, machining and manufacturing technology, this issue brings together practical knowledge and technical perspectives from across the industry.

We hope this edition provides useful information and meaningful technical insights for engineers, manufacturers and professionals working across the gear and power transmission sector.

Happy Reading!

gear TECHNOLOGY INDIA

Gear Technology India is a bimonthly publication created in collaboration between the Motion + Power Manufacturers Alliance (MPMA) and Virgo Communications & Exhibitions. It serves as the premier platform in the industry, offering latest innovations, information, interviews and technical articles related to gears.

PUBLISHER
Anitha Raghunath
anitha@virgo-comm.com

CONTENT CONTRIBUTOR
editorial@geartechnologyindia.com

ASSOCIATE EDITOR
Sushmita Das

TECHNICAL WRITERS
Nishant Kashyap
Neha Basudkar
Vishwajit Kothari
Sudhanshu Nayak
Vivek Singh

TECHNICAL EXPERTS
Soundararajan KP
Mahendran Muthu
Vishwajit Kothari

DESIGNER
Aneena AS

ADVERTISING, MARKETING & SALES
Raghunath G
raghu@virgo-comm.com | M: +91 98450 95803

CIRCULATION / SUBSCRIPTION
Selva Kumar
selvakumar@virgo-comm.com

ACCOUNTS
C Mahesh
accounts@virgo-comm.com

MANAGEMENT
Raghunath G
Matthew Croson

STAY CONNECTED

Join the Gear Technology India group at
www.facebook.com/geartechnologyindia

Follow us on Instagram
www.instagram.com/geartechnologyindia/

Connect with us on LinkedIn
www.linkedin.com/showcase/gear-technology-india

In Partnership With

MOTION + POWER MANUFACTURERS ALLIANCE™

virgo COMMUNICATIONS AND EXHIBITIONS (P) LTD

FOUNDER

Michael Goldstein founded Gear Technology in 1984 and served as Publisher and Editor-in-Chief from 1984 through 2019.
Thanks to his efforts, the Michael Goldstein Gear Technology Library, the largest collection of gear knowledge available anywhere will remain a free and open resources for the gear industry.
More than 38 years' worth of technical articles can be found online at geartechnology.com. Michael continues working with the magazine in a consulting role and can be reached via e-mail at michael@geartechnology.com.

DISCLAIMER

Gear Technology India is a registered trademark. All rights reserved.

For permission to republish any portion of the magazine, please contact the publishers at Gear Technology India.

The views and opinions expressed in the articles published in the magazine belong to the respective authors and contributors. These views and opinions do not necessarily represent those of the publisher / management.

While we take utmost care and caution, the responsibility for the content of the articles published in the magazine and the opinions expressed on the website are exclusively of the authors(s) concerned. We do not assume any responsibility or liability for the accuracy, suitability or validity of the articles, or for any loss, damage or consequences arising from the same.

We make no representation that information published in the magazine and on the website is correct and accurate.

All copyright over the articles and connected artwork published in the magazine and on the website rests absolutely with, and belongs to Gear Technology India. Any publication or use of the whole or any part of the published content without prior written consent will violate the copyright of Gear Technology India and is actionable.

All disputes are subject to jurisdiction of courts in Bangalore only, and laws of India will prevail.

Table Of CONTENTS

COVER STORY- CUTTING TOOLS

08 LMT Tools India – Strengthening India's Gear Manufacturing Capabilities
An exclusive conversation with Mr Ramakant Reddy, Managing Director, LMT Tools India Pvt. Ltd.

13 INDUSTRY UPDATE- AEROSPACE
Bevel Gears India (BGI) marks 50 years with new dedicated aerospace facility in Bengaluru, targets ₹500 crore in revenue by 2029

CUTTING TOOLS

15 PVD Coatings: Enabling Higher Performance and Longer Tool Life in Modern Cutting Tools

24 Vacuum Heat Treatment of Cutting Tools: Engineering Tool Life, Wear Resistance and Dimensional Stability

56 Why Ceramic Machining Doesn't Follow Carbide Rules

18 INTERVIEW
SKF's Technology Vision: Connecting Bearings, Data and Intelligent Manufacturing

22 INSPECTION
AI-Driven Inspection: Transforming Quality Control in Gear Manufacturing

30 INDUSTRY UPDATE
TaeguTec India Marks 25 Years of Advancing Manufacturing Excellence

INDUSTRY EVENT

34 MRAM Expo 2026: Building a Dedicated Platform for India's Maintenance, Reliability and Asset Management Ecosystem

45 Gleason Gear Technology Seminars 2026: Advanced Gear Technology Solutions for India

38 RESEARCH & TECH INNOVATION
Beyond Vibration: A Topological Proof for Early Gear Wear in Heavy-Duty Transmissions

41 CAMPUS TO INDUSTRY
Lightweight Gearing: Engineering Efficiency Driving the Future of Power Transmission

47 HEAT TREATMENT
SECO/WARWICK Marks a Milestone with Its Tenth Vacuum Furnace for Global Energy Leader

48 EXPERT COLUMN
Beyond the Involute: Tooth forms tuned for EV power density, and a production suite that now spans compound planetary design, linked skiving-honing simulation, and on-machine measurement

CUTTING TOOL & MACHINING

51 Smarter Honing, Better Returns: How Process Intelligence, Integrated Expertise, and Strategic Machine Selection Pay Off

PRODUCT UPDATE

57 NORD Strengthens Aluminium Drives for Harsh Wash-Down Applications

PRODUCT UPDATE - METROLOGY

59 OGP Introduces SmartScope E18 High-Capacity Benchtop Video Measurement System

LMT Tools India – Strengthening India's Gear Manufacturing Capabilities

An exclusive conversation with Mr Ramakant Reddy, Managing Director, LMT Tools India Pvt. Ltd.

-

By Sushmita Das

Ramakant Reddy
Managing Director
LMT Tools India Pvt. Ltd.

LMT Tools has steadily expanded its presence in India, evolving from a sales and customer-support organisation into a significant manufacturing and technology centre for the LMT Group. With its expanded facility in Pune, the company is strengthening its capabilities in high-precision gear cutting tools while also positioning India as an important part of its global manufacturing network.

In this exclusive interview, Sushmita Das, Associate Editor, Gear Technology India, speaks with Mr Ramakant Reddy, Managing Director, LMT Tools India Pvt. Ltd., about the company's journey in India, the expansion of its Pune facility, growing demand for high-precision gear cutting solutions, and the changing needs of industries such as automotive, EVs, aerospace, wind energy and railways. He also discusses LMT Tools' focus on productivity, tool life, process reliability and India's growing role in the company's global supply chain.

1. LMT Tools has been present in the Indian market for several years. How would you describe the company's journey in India, and how has the market evolved during this period?

Answer:

LMT Tools has had a very strong and progressive journey in India. What started in the year 2000 primarily as a sales and customer support presence has evolved into a significant manufacturing, engineering, and technology centre for the LMT Group.

A major milestone was the establishment of our manufacturing facility in Pune in 2013. At that time, the objective was very clear — to be closer to our customers, improve responsiveness and establish India as an important manufacturing base. Over the years, we have continuously expanded our manufacturing capabilities to produce gear cutting tools and SC round tools in India. Now we have India's largest state-of-the-art gear cutting tools manufacturing facility in Pune.

The Indian market itself has undergone a significant transformation. Customers today are much more focused on productivity, tool life, cycle time, quality consistency, machine utilisation, process reliability and cost per component, rather than simply the purchase price of a tool. We see this evolution as a major opportunity for LMT tools to bring our global gear-cutting expertise together with strong local application engineering and manufacturing capabilities.

In gear manufacturing particularly, we see a clear movement towards high-speed machining, tighter gear quality requirements, complex geometries and more sophisticated manufacturing processes. The growth of automotive, EVs, aerospace, wind energy and industrial transmission applications is further accelerating this transformation.

The Indian market has evolved from buying tools to buying productivity, process reliability and measurable manufacturing value.

2. What are the key factors driving the growing

demand for high-precision gear cutting tools in India, particularly across automotive, aerospace, railways, wind energy and general engineering?

Answer:

The fundamental driver is the transformation of Indian manufacturing from a cost-focused industry into a productivity- and technology-driven manufacturing ecosystem.

Across these industries, the expectations from gears are increasing at the same time; manufacturers are under constant pressure to reduce cycle time and manufacturing cost.

In automotive applications, for example, gearboxes are becoming more compact and quieter, which places greater demands on gear quality and manufacturing accuracy. EVs are also bringing new gear architectures and manufacturing requirements.

At the same time, aerospace applications demand extremely high levels of accuracy and process reliability. Wind energy and railways present a different challenge — larger components, demanding operating conditions and very high expectations for reliability and tool performance. General engineering is similarly moving towards higher productivity and greater flexibility.

This is where application-specific tool design becomes important. LMT Fette's portfolio ranges from PM-HSS and SpeedCore hobs to solid-carbide and inserted-type gear-cutting solutions, GearSkiving, ChamferCut and specialised gear-cutting systems covering a very broad range of gear-cutting requirements.

3. LMT Tools India recently inaugurated the expansion of its Chakan facility, making it the country's largest gear cutting tool manufacturing plant. What was the strategic vision behind this major investment?

Answer:

The investment represents much more than an increase in capacity. It is a long-term strategic investment in India's growing manufacturing potential and in LMT Tools' commitment to the Indian market. We see India as an important manufacturing and engineering base for the LMT Group. The vision was therefore to create a facility capable of supporting the next phase of growth. By strengthening our local manufacturing capabilities, we can respond faster to domestic customers and, more importantly, the Pune plant is evolving beyond a manufacturing facility into a centre of competence for gear-cutting technology.

The expanded facility incorporates modern machinery, optimised production workflows, automation and stringent quality systems designed for high-precision manufacturing. More importantly, it creates the infrastructure required for future technology and capacity expansion.

This investment is not just about expanding our plant; it is about strengthening India's role in LMT's global growth story.

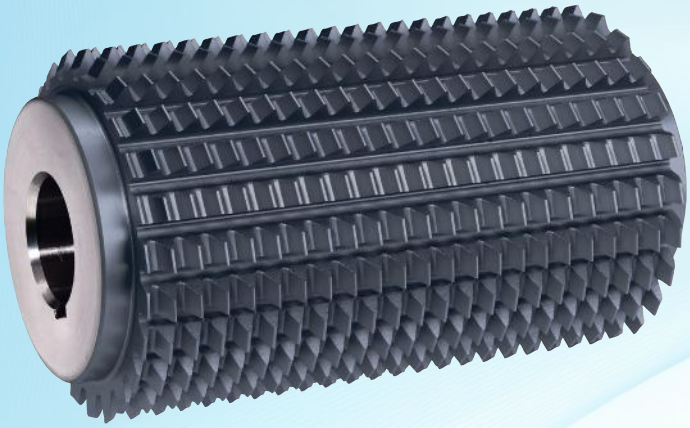

4. The expansion has increased the plant's production capacity. What specific capabilities or manufacturing technologies have been added, and how will this additional capacity benefit your customers?

Answer:

The increased production capacity strengthens our ability to manufacture high-precision gear-cutting tools across different sizes and applications. Also, there is the addition of modern production technologies such as an in-house coating facility, increased automation and enhanced manufacturing infrastructure. Hence, the expansion has boosted our capabilities to manufacture small, medium and large gear hobs and other advanced gear-cutting solutions, while maintaining LMT's stringent global quality standards.

For Indian customers, the most tangible benefits will be shorter lead times, greater performance reliability, and quicker tool service. At the same time, increased manufacturing scale improves our ability to support export markets from India.

The facility is also designed to support future growth, so we are not simply adding capacity for today's requirements—we are creating a platform for the next phase of India's gear manufacturing growth.

5. With Pune plant positioned as a strategic global manufacturing hub, what role will the Indian facility play within LMT Tools' global manufacturing and supply chain network?

Answer:

Within LMT Tools Group, Pune is increasingly becoming much more than an Indian manufacturing plant. It is a strategic node in LMT Tools' global manufacturing network, being an important global manufacturing and competence centre.

The Pune facility will therefore serve two purposes simultaneously: supporting the Indian market and contributing to the global supply chain through exports. Our engineers and production teams are trained to LMT's global standards, enabling us to manufacture products that can serve international customers as well. The Indian team members work within LMT's global technology network, which allows knowledge, processes and application expertise to move in both directions.

The Pune facility will therefore have a dual responsibility — support the rapidly growing Indian market and contribute to LMT's global supply chain. This approach is consistent with LMT's broader global model of connecting competence centres in India, China, the USA and Europe so that product development, application engineering and customer support can be brought closer to the markets they serve. Our Indian facility has already developed export capabilities and has been recognised for performance excellence. The expansion takes this philosophy to the next level.

6. How much of the production from the expanded facility is currently focused on the Indian market, and how significant is the export potential from India going forward?

Answer:

India is our primary growth market, and serving Indian customers remains a key priority. At the same time, we have deliberately designed the Pune facility with a global perspective.

We therefore do not look at the Pune plant simply as a manufacturing facility producing for India. It is an important part of LMT Tools' international manufacturing

network. At present, nearly 60% of the production is oriented towards export markets. This is an important indicator of the quality, competitiveness and global acceptance of the products manufactured at Pune.

Going forward, we see substantial headroom for exports, particularly for high-precision gear-cutting tools. Our ambition is to make India an increasingly important sourcing and manufacturing location within LMT Tools' global network.

The opportunity is therefore not simply "Made for India", but increasingly "Made in India for the world."

7. The Indian manufacturing sector is increasingly looking for higher productivity, tool life and process reliability. How is LMT Tools helping customers address these requirements through its gear cutting solutions?

Answer:

This is precisely where LMT's strength lies. The productivity comes from the combination of tool design, cutting material, geometry, coating, process parameters and application engineering.

For example, our SpeedCore technology enables

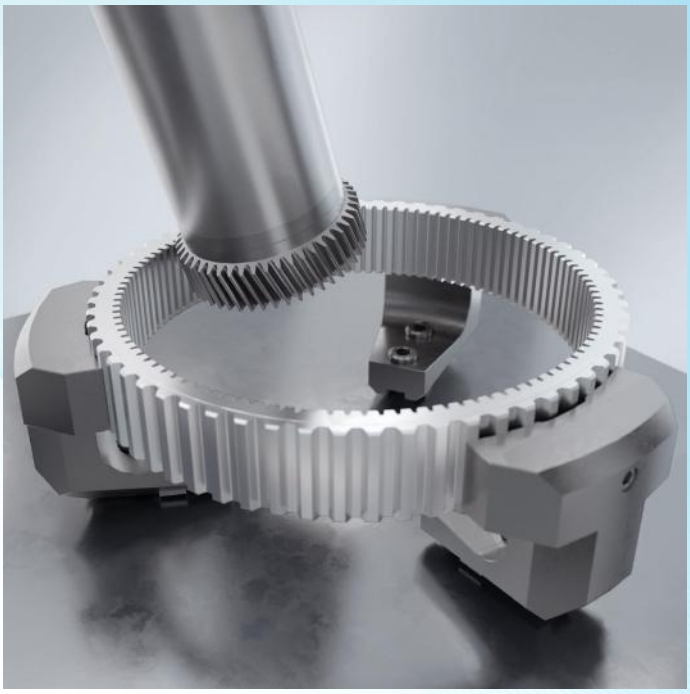

significantly higher cutting speeds than conventional PM-HSS, with LMT stating potential increases of up to 50% depending on the application. This can translate directly into higher machine utilisation and productivity. Similarly, the CarbideLine family provides different solutions depending on the customer's requirement — solid carbide

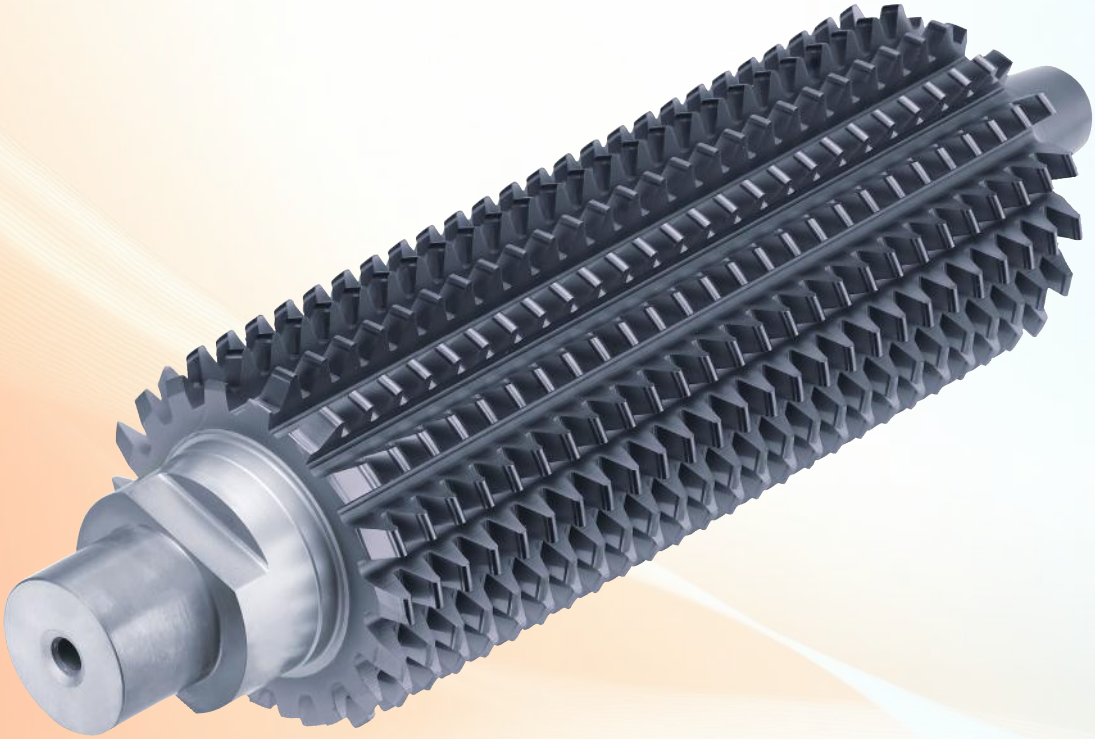

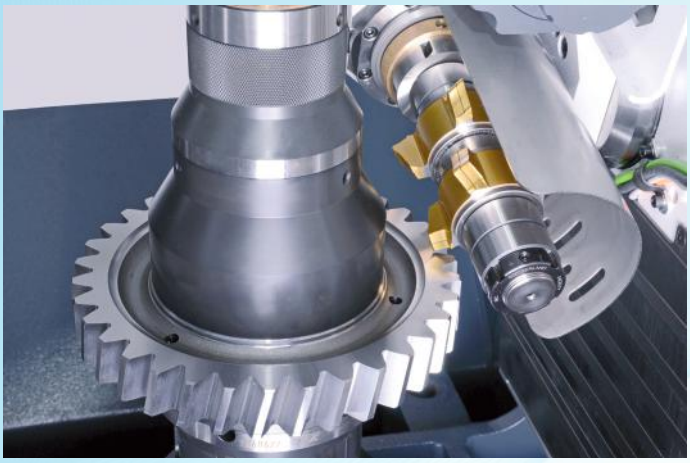

and indexable technologies.

Our GearSkiving technology is another important example. We combine high-performance tools with process simulation, allowing the process to be assessed during the design stage before the tool reaches production. This significantly improves process reliability and reduces the risk associated with complex skiving applications.

And our support does not end when the tool is delivered. Through our tool-service capabilities, including regrinding and coating, we help customers maximise the complete life cycle of their gear-cutting tools.

Our ultimate focus is to deliver higher productivity, longer tool life, and lower cost per component.

8. With the rapid growth of EVs, aerospace manufacturing, renewable energy and advanced mobility, how is LMT Tools adapting its product portfolio to meet the changing requirements of these industries?

Answer:

The changes in these industries are fundamentally changing the requirements placed on cutting tools.

In automotive and EVs, for example, we are seeing new gear architectures, compact transmissions, enhanced quality requirements, and increasing demands for productivity. LMT's advanced gear-cutting technologies are being developed around these requirements. Our GearSkiving, hobbing, and ChamferCut technologies are particularly relevant because they provide manufacturers with alternatives to conventional processes and enable higher productivity and process flexibility.

For aerospace, the focus is more on precision and process reliability. In wind energy and other heavy industries, the challenge can shift towards very large modules and demanding component sizes. Our gear-cutting tools portfolio covers applications ranging from small automotive gears to very large gears used in wind-energy applications.

We are developing flexible technology platforms that can address emerging manufacturing requirements across industries.

Bevel Gears India (BGI) marks 50 years with new dedicated aerospace facility in Bengaluru, targets ₹500 crore in revenue by 2029

- By Gear Technology India

Mushtaq Jamal, Director – Engineering & Business Development, Bevel Gears India, along with Sulaiman Jamal, Managing Director, Jamal Group

The new facility is BGI's first purpose-built aerospace unit and is a key part of its growth strategy as the company targets ₹500 crore in revenue by 2029, while continuing to serve established motorsport, mining, steel and industrial customers worldwide.

Bevel Gears India Pvt. Ltd. has inaugurated a new 70,000 sq ft manufacturing facility near Kempegowda International Airport, dedicated exclusively to aerospace and defence gearing.

"This is our first plant built from the ground up for aerospace," said Mushtaq Jamal, Director – Engineering & Business Development, Bevel Gears India. "The facility has been designed around the requirements of flight-critical gearing, with dedicated manufacturing, inspection and quality infrastructure to support demanding tolerances, process control and complete traceability."

The plant will manufacture spiral and straight bevel gears, zero and angular bevels, beveloids, hypoid and high-ratio hypoid gears, curvic couplings and precision parallel-axis gearing. These capabilities support aero-engine, helicopter, UAV, actuation and aerospace gearbox programmes from development through serial production.

Located within Bengaluru's growing aerospace corridor, the facility places BGI close to aircraft and aerospace OEMs, MRO companies, Tier-1 suppliers and other companies that make up the region's aerospace ecosystem.

The new facility comes as more global aerospace companies increase sourcing from Indian manufacturers, while India's precision-manufacturing capabilities continue to grow to meet the requirements of the sector.

"India's aerospace sector is growing rapidly, with global engine and airframe makers expanding their supplier base in the country. Demand is also increasing for the complex, flight-critical gearing we have specialised in for five decades," said Sulaiman Jamal, Managing Director, Jamal Group. "This plant allows us to take programmes from prototype and development quantities through to serial production across multiple platforms. We also offer reverse engineering services for legacy and obsolete parts, enabling customers to maintain their equipment."

The new unit houses Gleason and Klingelnberg CNC bevel and hypoid gear grinding lines, including India's first Gleason 275G CNC hypoid grinder with a special straight bevel grinding option and India's first Klingelnberg Oerlikon G80 CNC hypoid grinder. The facility is complemented by DMG 5-axis machining centres and a climate-controlled metrology room equipped with ZEISS coordinate measuring machines and Gleason gear inspection systems. Gear design and tooth-contact analysis are supported by industry-standard Gleason software reinforced by SolidWorks. Material handling is supported by a 10-tonne EOT crane.

The facility operates under AS9100D-certified aerospace quality systems and holds ISO 9001:2015 certification. Heat treatment capabilities and NADCAP accreditation for special processes are planned as the next phase.

About Bevel Gears India

Founded in 1976 and part of the Jamal Group, Bevel Gears (India) Pvt. Ltd. is a Bengaluru-based specialist in high-precision bevel gears, manufacturing straight, spiral, zero, angular and hypoid gears from a few millimetres to nearly two metres in diameter.

Operating on a high-mix, low-volume model, BGI serves aerospace, space, motorsport, mining, steel and industrial customers across international markets. The

company was among the first in India to install CNC bevel gear grinding technology.

BGI's products have also supported India's space programme, including gears aboard Pragyan, India's lunar rover on the Chandrayaan-3 mission.
https://bevelgearsindia.com/

gear TECHNOLOGY INDIA

Your gateway to India's exclusive magazine for the Gear & Allied sectors

Gear Technology India is India's first and only multifaceted Web Platform catering to the Indian Gear Industry

Scan To Subscribe

For Advertisement:
Raghunath G | raghu@virgo-comm.com | +91 98450 95803
For Editorials: editorial@geartechnologyindia.com

www.geartechnologyindia.com

PVD Coatings: Enabling Higher Performance and Longer Tool Life in Modern Cutting Tools

- By Ajit Patil, CEO,
Unitherm Nova Coating

How advanced surface engineering is helping cutting tools withstand higher speeds, temperatures and demanding machining conditions

The cutting tool industry is undergoing a continuous shift toward higher productivity, shorter cycle times and machining of increasingly difficult materials. Higher cutting speeds, greater feed rates, dry machining and demanding workpiece materials are placing greater thermal, mechanical and tribological loads on cutting edges.

While advances in carbide, cermet, ceramic and other tool substrates have significantly improved cutting performance, the surface of the cutting tool remains one of the most critical factors determining tool life and machining efficiency.

This is where Physical Vapour Deposition (PVD) coatings play an important role.

Modern PVD coatings can provide a combination of wear resistance, hot hardness, oxidation resistance and controlled friction characteristics, helping cutting tools operate under demanding machining conditions. Research has demonstrated the performance advantages of PVD-coated tools across different machining applications and difficult-to-machine materials.

The Changing Demands on Cutting Tools

The objective of modern machining is no longer simply to remove material. Manufacturers increasingly need to achieve:

- Longer and more predictable tool life
- Consistent surface finish
- Reduced machine downtime
- Greater process stability
- Improved productivity per tool
- Efficient machining of difficult-to-cut materials

These requirements create a challenging environment at the tool–workpiece interface.

During cutting, the tool edge is exposed simultaneously to high temperatures, friction, mechanical loading, abrasion, adhesion and chemical interactions. Depending on the application, these conditions can lead to flank wear, crater wear, chipping, built-up edge formation and progressive degradation of the cutting edge.

A coating therefore cannot be viewed simply as an additional layer on a tool. It needs to function as an engineered surface that interacts with the substrate, workpiece material, cutting parameters and machining environment.

How PVD Coatings Improve Cutting Tool Performance

PVD is a vacuum-based coating technology capable of depositing thin, hard protective films onto cutting tools.

The coating acts as a functional interface between the tool substrate and the machining environment. Depending on its composition and architecture, it can provide several performance advantages.

1. Improved Wear Resistance

A major function of a cutting-tool coating is to delay abrasive and adhesive wear.

During machining, continuous contact between the tool and workpiece can progressively damage the cutting edge. Hard PVD coatings can provide a protective surface capable of resisting these wear mechanisms.

Studies comparing coated cutting tools have

demonstrated the importance of coating composition in determining wear behaviour and tool life. In particular, TiAlN and AlCrN-based coatings have demonstrated strong performance under demanding cutting conditions.

2. Thermal Stability for High-Speed Machining

As cutting speeds increase, the temperature generated near the cutting edge becomes increasingly important.

Coatings with high hot hardness and oxidation resistance can help maintain the functional properties of the cutting edge at elevated temperatures. This becomes particularly relevant in high-speed cutting and dry machining, where the thermal load on the tool can be substantial.

The development of Al-containing nitride coatings, for example, has been closely associated with the requirements of high-performance cutting applications and improved resistance to elevated-temperature conditions.

3. Reduced Friction

Friction between the cutting tool and workpiece or chip contributes to heat generation and can accelerate tool degradation.

Appropriately engineered coatings can reduce friction and minimise the tendency of workpiece material to adhere to the tool surface. This is particularly valuable when machining materials such as aluminium alloys, titanium alloys and high-alloy steels, where adhesion and thermal loading can significantly influence tool performance.

Research on PVD-coated tools has shown that coating selection can influence work-material adhesion and wear behaviour at the tool–chip interface.

4. Enabling Difficult-to-Cut Materials

Modern industries such as aerospace, automotive, medical and energy increasingly use materials that present significant machining challenges.

Titanium alloys, nickel-based alloys, hardened steels and high-alloy materials can generate substantial heat and mechanical loading during machining.

For such applications, the coating has to be selected according to the specific combination of tool substrate, workpiece material, cutting speed, feed, depth of cut and machining environment. Research on Cronova-check to include coated carbide tools, for example- has investigated their effectiveness in machining titanium alloys under high-temperature cutting conditions.

Coating Selection Is Application-Specific

One of the most important developments in modern PVD coating technology is the move away from a "one coating fits all" approach.

A coating that performs exceptionally well in one machining application may not necessarily provide the same results in another.

The appropriate coating architecture and chemistry depend on factors such as:

Workpiece material → Tool substrate → Cutting parameters → Machining operation → Thermal load → Wear mechanism → Required tool life
For example, the requirements for a high-speed milling application can be very different from those of drilling, threading or gear cutting.

This makes coating selection an engineering decision rather than simply a purchasing decision.

PVD Coatings Across Cutting Tool Applications

The versatility of PVD technology allows coatings to be developed for a broad range of cutting applications.

These include:

- **Turning:** Improved resistance to flank and crater wear under continuous or interrupted cutting.
- **Milling:** Enhanced resistance to cyclic mechanical and thermal loading.
- **Drilling:** Protection of cutting edges subjected to high friction and heat generation.
- **Reaming:** Supporting dimensional accuracy and surface-finish requirements.
- **Threading:** Improving edge durability and resistance to wear.
- **Gear Cutting:** (Hob/Shapers/Blades) Enhancing the service performance of complex cutting geometries used in gear manufacturing.

This broad application range makes advanced PVD coatings an important part of the modern cutting-tool ecosystem.

Unitherm Nova Coating: Engineering the Surface for the Application

Unitherm Nova Coating (UNC) brings advanced PVD coating technology to the cutting-tool industry with

a focus on performance-oriented surface engineering.

UNC's cutting-tool coating solutions are designed to address the requirements of demanding machining operations, with emphasis on wear protection, thermal stability, hot hardness, oxidation resistance and controlled friction. The solutions are applicable across turning, milling, drilling, reaming, threading and gear-cutting applications.

A key aspect of this approach is the ability to develop coating solutions around the application rather than treating the coating as an isolated component.

For cutting-tool manufacturers and reconditioning specialists, this means considering the complete machining system — from substrate and tool geometry to workpiece material and cutting parameters.

From Tool Coating to Process Performance

The real value of a PVD coating should ultimately be measured by its impact on the machining process.
A high-performance coating can contribute to:

Longer tool life
↓
Fewer tool changes
↓
Lower machine downtime
↓
More consistent machining
↓
Higher productivity

However, achieving these benefits requires more than simply applying a hard coating. Surface preparation, substrate condition, coating adhesion, coating architecture and process control are all critical to achieving consistent performance.

For this reason, the future of cutting-tool coatings lies in application-specific engineering — matching the coating technology to the actual demands imposed on the tool.

Looking Ahead

The cutting-tool industry will continue to move toward higher cutting speeds, increased automation, dry and minimum-quantity lubrication machining, and the processing of advanced materials.

As these demands increase, surface engineering will become even more important.

The next generation of PVD coatings will not be defined solely by hardness. Thermal behaviour, toughness, oxidation resistance, friction, adhesion, coating architecture and compatibility with the tool substrate will increasingly determine coating performance.

For cutting-tool manufacturers, the objective is therefore not simply to make the surface harder. It is to engineer a surface that performs reliably under the specific conditions in which the tool operates.

Unitherm Nova Coating (UNC) is a joint venture between Unitherm Engineers and Nova Coating GmbH, Germany, specialising in advanced PVD coating solutions. Its coating technologies serve applications including cutting tools, dies and moulds, & components with solutions engineered to enhance wear resistance, tool life and process performance.

Looking to improve cutting-tool life, machining consistency or productivity? Talk to the Unitherm Nova Coating team to evaluate the right PVD coating for your tool substrate, workpiece material and machining conditions.

Ajit Patil,
CEO, Unitherm Nova Coating

Ajit Patil is the Chief Executive Officer of *Unitherm Nova Coating (UNC)*, a joint venture bringing together Unitherm Engineers' expertise in India with Nova Coating's advanced German surface-coating technology. With extensive leadership experience and a strategic business approach, Ajit focuses on driving customer value, business growth and operational excellence. At UNC, he is leading the company's growth in advanced PVD coating solutions for demanding industrial applications, with a strong emphasis on technology, quality and long-term customer partnerships.

Contact: Unitherm Nova Coating | info@unc-india.com
Website: www.unc-india.com
LinkedIn: https://www.linkedin.com/company/unitherm-nova-coating

SKF's Technology Vision: Connecting Bearings, Data and Intelligent Manufacturing

- By Sushmita Das

AI, IoT, connected technologies and sustainability are reshaping modern manufacturing, while traditional components such as bearings are evolving into smarter, data-driven solutions that improve machine reliability and efficiency.

Sushmita Das, Associate Editor, Gear Technology India, interacted with Mr Sanoj Somasundaran, Chief Technology Officer, SKF India (Industrial), and Director, Technology Development, ISEAM, to discuss these developments and their implications for the gear and power transmission industry. With over 28 years of experience in engineering, product development and digital technologies, Mr Somasundaran shares his insights on predictive maintenance, advanced materials, energy efficiency, SKF's Bengaluru Global Technical Centre, and the future of intelligent manufacturing in India.

Sanoj Somasundaran

Chief Technology Officer, SKF India (Industrial), and Director, Technology Development, ISEAM (India, SE Asia, Middle East)

1.How is SKF India Industrial integrating AI, IoT, and connected technologies into bearing solutions for modern gear-driven systems?

At SKF India Industrial, we are redefining modern gear-driven systems by transforming the traditional bearing from a purely mechanical component into an intelligent, data-generating unit. Through our advanced sensor integration and wireless frameworks, we are embedding digital technology directly into rotating equipment, creating a real-time digital loop between physical assets and cloud analytics. Our connected technology platforms, such as Aptitude Insight, capture critical operational metrics, including thermal behaviours and vibration signatures, converting raw data into clear, actionable intelligence that helps in predictive & preventive maintenance. We also have Aptitude Reliability, which helps with data visualisation and provides insights into the overall health condition through a multi-level dashboard, which would further strengthen the response to queries related to integrating AI, IoT, and connected technologies. In complex gear systems, this enables continuous health monitoring, ensuring heavy machinery does not operate in isolation. This intelligent connectivity is vital as India targets rapid infrastructure expansion, enabling operators to optimise heavy rotating assets. By leveraging these digitalisation levers, we move beyond component supply to become a true problem-solving partner, providing solutions helping industries eliminate premature wear and maximise system performance.

2.What emerging trends are shaping the future of bearings and power transmission technology?

The industrial rotating landscape in India is experiencing an intense transformation driven by rapid technological evolution, automation, and structural macro trends like digitalisation and decarbonization. We see a shift where standard mechanical assemblies are giving way to high-efficiency, sensor-equipped rotating technologies have a better predictive & preventive maintenance. One of the most prominent localised trends is the rapid adoption of Industry 4.0 and smart manufacturing across Indian factories, creating an urgent demand for bearings that seamlessly integrate with automated systems and IoT-enabled machinery. This is critical to minimising industrial downtime, enhancing productivity, and lowering overall maintenance costs.

At SKF India Industrial, we are actively leading these trends by focusing on closing the energy efficiency gap in industrial operations. For instance, the aggressive acceleration of electrification in industrial motors demands specialised solutions like our newly optimised hybrid ceramic bearings. These bearings eliminate electrical erosion and offer up to eight times longer grease life and 25% higher operating speeds than standard steel bearings, enabling highly compact and energy-efficient motor designs. Concurrently, to support India's massive expansion in high-tech infrastructure and data centres, we have introduced frictionless magnetic bearing solutions for centrifugal chillers, allowing oil-free operations and maximum energy efficiency. These deep engineering trends align perfectly with India's macro momentum, where high-tech manufacturing has surged to contribute a substantial 46.3% of the manufacturing sector's value added, demanding highly specialised, future-ready rotating infrastructure.

3.How is SKF's Global Technical Centre in Bengaluru contributing to next-generation industrial solutions for global markets?

Our Global Technical Centre India (GTCI) in Bengaluru is a cornerstone of our global engineering footprint and a vital powerhouse of innovation. Operating with over 15 years of built development expertise, GTCI functions as a crucial hub on two fronts.

1. For India, South-East Asia, Middle East regional markets
2. For global engineering from India.

The centre drives advanced engineering and product adaptations to suit specialised customer and industry needs, helping OEMs design systems focused on sustainability and lower carbon emissions. The technical depth at GTCI is extensive.

Our specialised teams perform sophisticated finite element analysis and complex product investigations, using advanced simulation and calculations to evaluate high-value component behaviours before physical manufacturing begins. We also have state-of-the-art labs & testing at GTCI, where you do physical testing before releasing the product into the market. This local testing and modelling capacity accelerates innovation cycles while enabling a full value chain ecosystem for critical sectors like wind energy, railways, and heavy machinery, etc.

Furthermore, we practice what we preach when it comes to sustainability. The GTCI centre itself stands as an operational benchmark for environmental conservation, utilising high-efficiency Swegon Air Handling Units, solar hot water networks, and smart energy panels that save considerable energy annually. By tightly integrating core engineering with deep digital capabilities and green operations, Bengaluru successfully delivers products to the regional market as well as for the global industrial market requirements.

4.What role does predictive maintenance play in improving the reliability of gearboxes and rotating equipment?

We see predictive maintenance as the absolute cornerstone for transitioning heavy industries from a state of costly reactive repair to proactive machine reliability. Industrial machinery, especially complex rotating equipment and gearboxes, often operates under gruelling, continuous stress where minor internal anomalies can quickly manifest as catastrophic mechanical failure. Our specialised predictive maintenance products detect & give alerts on anomalies. By utilising advanced machine condition-monitoring tools, we continuously track critical health indicators, such as vibration, temperature, humidity, etc.

To make this analysis effortless, we have introduced portable, smart tools like our new QuickCollect sensor CMDT392. This Bluetooth-enabled device delivers faster data collection and features a simple, user-friendly design backed by a rechargeable battery built for a full day of work. Through seamless app connectivity, it allows operators to detect microstructural anomalies, surface wear, and misalignment weeks before any visible damage or performance drop occurs. In capital-intensive sectors like power generation, mining, and cement, this strategic insight minimises unplanned downtime, optimises total maintenance costs, and prevents secondary component damage across the drivetrain. As Indian factories aggressively scale up automation, our predictive framework delivers the operational security required to protect full-scale industrial productivity and extend equipment lifecycles.

5.How are advancements in bearing materials and lubrication technologies helping industries

achieve higher efficiency and longer service life?

SKF India Industrial is firmly committed to the philosophy of less friction, more progress, recognising that the science of tribology, managing friction, wear, and surface interactions, is crucial to elevating industrial performance. As India strives to move higher in global manufacturing indices, achieving true competitive excellence means doing more with less energy, less material loss, and zero unplanned downtime. We are addressing this directly by embedding deep tribological and metallurgical insights into our design processes, preventing unpredictable component deformation and heat build-up under extreme operating conditions.

Our latest high-performance materials and intelligent lubrication systems are breakthroughs in extending asset lifecycles while maximising industrial efficiency. For instance, our newly engineered energy-efficient deep groove ball bearings reduce frictional moment by 25% or more, doubling bearing service life while securing a substantial reduction in carbon emissions. Similarly, our large-size sealed spherical roller bearings engineered for heavy sectors like mining and cement cut grease consumption by an incredible 99% and effectively triple service life. By introducing optimised, specialised lubrication management systems, we eliminate contamination risks and ensure that critical machinery operates with unmatched reliability. These material advancements empower Indian industrial sectors to achieve rigorous productivity benchmarks and advance their decarbonization journeys.

6.What opportunities do you see for Indian manufacturers in the shift toward intelligent and software-defined industrial systems?

SKF India Industrial sees the shift toward intelligent and software-defined industrial systems as a significant opportunity for Indian manufacturers to improve asset reliability, operational efficiency, and competitiveness. As manufacturing environments become increasingly complex, leveraging real-time machine health data and predictive insights will be critical to ensuring uninterrupted operations and maximising productivity.

Through advanced condition monitoring and predictive maintenance solutions, manufacturers can detect potential equipment issues at an early stage, enabling timely interventions before failures occur. This helps reduce unplanned downtime, improve asset availability, and optimise maintenance strategies based on actual equipment condition rather than fixed schedules, as highlighted by SKF's Predictive Maintenance Services. By transforming maintenance from a reactive to a predictive function, intelligent industrial systems enable organisations to make better-informed decisions, improve resource utilisation, and enhance overall operational performance.

As India continues its manufacturing growth journey, the adoption of data-driven and intelligent technologies will help industries build more resilient and efficient operations while supporting sustainable long-term growth.

7.How is SKF India Industrial collaborating with startups to accelerate innovation in industrial technologies?

SKF India Industrial believes collaboration with startups is essential to accelerating innovation and shaping the future of industrial technologies. Through SKF Ventures, we are creating a platform that brings together SKF India Industrial's deep industrial expertise with the agility, creativity, and emerging capabilities of startups and technology innovators.

SKF Ventures focuses on identifying emerging technologies, validating new ideas through open innovation, and scaling promising solutions into sustainable businesses. By engaging with startups, technology partners, and external innovators, SKF India Industrial gains early access to breakthrough technologies and new business models in areas such as digital solutions, energy efficiency, and circularity. This collaborative approach complements our internal R&D efforts, enabling us to accelerate innovation cycles and develop smarter, more sustainable solutions that address evolving customer needs.

As industries continue to transform, partnerships with the startup ecosystem will play a critical role in helping SKF India Industrial drive industrial innovation, strengthen competitiveness, and create long-term value for customers and society.

8.Sustainability is becoming a key manufacturing priority. How is SKF India Industrial aligning its technology roadmap with this objective?

At SKF India Industrial, sustainability is deeply embedded in our innovation strategy and serves as a key driver of our technology roadmap. As manufacturers increasingly focus on improving efficiency while reducing their environmental impact, we are developing intelligent and energy-efficient solutions that help customers enhance performance, optimise resource utilisation, and advance their sustainability goals.

Our innovation efforts are focused on

technologies that improve equipment reliability, extend asset life, reduce energy consumption, and enable more efficient industrial operations. Alongside advancements in bearing technologies, tribology, and lubrication solutions, we are leveraging digital capabilities such as AI-enabled analytics, predictive maintenance, real-time diagnostics, and sensor integration to help customers monitor equipment health, optimise performance, and minimise unplanned downtime. We are also incorporating digital twins and model-based engineering approaches to simulate and enhance product performance before deployment, enabling more efficient use of resources throughout the asset lifecycle.

By combining advanced engineering expertise with digital innovation, we help industries achieve greater productivity while reducing waste, emissions, and overall energy consumption. These initiatives reflect SKF India Industrial's belief that sustainability is deeply embedded in our DNA and central to how we innovate.

9.What skills will engineers need to thrive in an era increasingly defined by digitalisation and smart manufacturing?

As digitalisation and smart manufacturing reshape industrial operations, engineers will need a strong foundation in core engineering principles, combined with skills in data analytics, automation, AI, and Industrial IoT. Equally important will be the ability to translate large volumes of industrial data into meaningful, actionable insights that improve operational performance on the shopfloor. Engineers will also need to work seamlessly across multidisciplinary teams, integrating mechanical, digital, and software-driven perspectives to solve complex manufacturing challenges. As production systems become increasingly connected and intelligent, adaptability, problem-solving, and continuous upskilling will be critical to keeping pace with evolving technologies and ensuring effective adoption of smart manufacturing practices.

Together, these capabilities will enable engineers to lead more efficient, resilient, and future-ready manufacturing systems.

10.What are SKF India Industrial's key technology priorities for the industrial sector over the next five years?

Over the next five years, SKF India Industrial's key technology priorities for the industrial sector will focus on closing the energy efficiency gap by developing solutions that improve energy performance in industrial applications. A key emphasis will be on technologies that help reduce energy losses through improved friction management and more efficient operation of rotating equipment.

SKF India Industrial will also focus on advancing energy-efficient bearing technologies and related innovations that enhance overall machine performance while lowering energy consumption. Alongside this, digital technologies and condition monitoring will play an important role in improving visibility of equipment performance and enabling better operational outcomes. Through these focus areas, we at SKF India Industrial aim to support industries in improving efficiency, reliability, and sustainability in their operations.

AI-Driven Inspection: Transforming Quality Control in Gear Manufacturing

- By Suyog Shelar, Operations Manager, Shelar Automation

The gear manufacturing industry stands at a pivotal crossroads. As someone who has spent years working in automation and industrial solutions, I have witnessed firsthand how the convergence of artificial intelligence and inspection systems is fundamentally reshaping quality control on the shop floor. What was once a labour-intensive, error-prone process is now evolving into a precise, data-driven operation that delivers consistency, speed, and actionable insights.

The Imperative for Change

Traditional inspection methods in gear manufacturing have long relied on manual gauging, visual checks, and operator judgment. While these methods served the industry for decades, they come with inherent limitations—human fatigue, subjective interpretation, and the inability to process large volumes of data in real time. According to a 2023 report by MarketsandMarkets, the global machine vision market, which encompasses AI-driven inspection systems, was valued at USD 12.5 billion and is projected to reach USD 17.2 billion by 2028, growing at a compound annual growth rate (CAGR) of 6.5%.

This growth is not incidental. Industries such as automotive, aerospace, and heavy machinery, where gears are mission-critical components, are demanding higher precision, tighter tolerances, and complete traceability. The cost of a defective gear reaching the end customer can be catastrophic, not just financially but also in terms of safety and brand reputation.

What Is AI-Driven Inspection?

AI-driven inspection refers to the integration of artificial intelligence algorithms, particularly machine learning and deep learning, with vision systems, sensors, and measurement devices to automate the detection of defects, dimensional deviations, and surface anomalies. Unlike rule-based systems that require explicit programming for every possible defect type, AI systems learn from data. They can identify patterns, classify defects, and even predict potential failures based on subtle variations that would escape human observation.

In the context of gear manufacturing, AI-driven inspection can encompass:

- Surface defect detection: Identifying scratches, pitting, cracks, and heat treatment anomalies on gear teeth and flanks.
- Dimensional verification: Automated measurement of pitch, profile, lead, runout, and tooth thickness against tolerances defined by standards such as ISO 1328 or AGMA.
- Assembly verification: Ensuring correct orientation, meshing, and alignment in gearbox assemblies.
- Predictive quality analytics: Using historical inspection data to forecast process drift and prevent batch-level rejections.

The Technology Behind the Transformation

At the core of AI-driven inspection are convolutional neural networks (CNNs), which excel at image recognition tasks. When trained on thousands of images of acceptable and defective gears, these networks can distinguish conforming from non-conforming parts with remarkable accuracy. A study published in the International Journal of Advanced Manufacturing Technology demonstrated that deep learning models achieved defect detection accuracy exceeding 98% in gear surface inspection, significantly outperforming traditional machine vision algorithms.

Beyond imaging, AI is also being applied to data from coordinate measuring machines (CMMs), gear roll testers, and double-flank testing equipment. By analysing measurement trends over time, AI algorithms can detect subtle shifts in manufacturing parameters tool wear, thermal drift, or material inconsistencies before they result in out-of-spec parts.

Real-World Impact: Numbers That Matter

The business case for AI-driven inspection is compelling. According to Deloitte's 2024 Manufacturing Industry Outlook, manufacturers who have implemented AI-based quality systems reported a 20–30% reduction in inspection cycle time and a 15–25% decrease in scrap and rework costs.

In India, the adoption is accelerating. The Indian machine tool industry, valued at approximately USD 1.2 billion, is increasingly integrating smart manufacturing technologies. A survey by the Indian Machine Tool Manufacturers' Association (IMTMA) indicated that over 40% of member companies are exploring or piloting AI and IoT-based solutions for quality and process control. For a typical gear manufacturing unit producing 10,000

components per day, even a 1% reduction in rejection rate translates to significant annual savings. When you factor in the cost of customer returns, warranty claims, and lost business, the return on investment for AI-driven inspection systems becomes self-evident.

Implementation Considerations

Adopting AI-driven inspection is not merely about purchasing a camera and installing software. It requires a systematic approach:

- Data collection and labelling: AI models are only as good as the data they are trained on. Manufacturers must invest in capturing high-quality images and measurements, and in accurately labelling defect types.
- Integration with existing systems: The inspection solution must communicate seamlessly with PLCs, SCADA systems, and enterprise resource planning (ERP) software to enable real-time decision-making and traceability.
- Change management: Operators and quality engineers need training to interpret AI outputs and to intervene when the system flags anomalies. The human element remains critical.
- Continuous learning: Manufacturing processes evolve with new materials, new designs, new suppliers. AI systems must be periodically retrained to maintain accuracy.

The Road Ahead

The future of AI-driven inspection in gear manufacturing is bright. Edge computing is enabling real-time inference directly on the shop floor, eliminating latency and reducing dependence on cloud connectivity. Generative AI is being explored to simulate defect scenarios, augmenting training datasets where real defect samples are scarce. Digital twins, the virtual replicas of physical gear systems, are being used to validate inspection algorithms before deployment.

As India positions itself as a global manufacturing hub under initiatives such as Make in India and the Production Linked Incentive (PLI) schemes, the adoption of advanced quality technologies will be a differentiator. Gear manufacturers who embrace AI-driven inspection today will be better equipped to meet the stringent requirements of international OEMs and to compete on quality, not just cost.

Reference Links-

https://www.marketsandmarkets.com/Market-Reports/industrial-machine-vision-market-234246734.html
https://link.springer.com/journal/170
https://www.deloitte.com/us/en/pages/manufacturing/articles/manufacturing-industry-outlook.html
https://www.imtma.in/

About the Author
Suyog Shelar
Operations Manager
Shelar Automation

Suyog Shelar is the Operations Manager at Shelar Automation and a results-oriented automation engineer with over 25 years of experience in metrology equipment automation. He specialises in improving product quality and reducing rework, with extensive experience across project execution, design, R&D, and commissioning. He has delivered advanced testing systems, CNC solutions, and customised instruments for the automotive, gear manufacturing, and defence sectors.

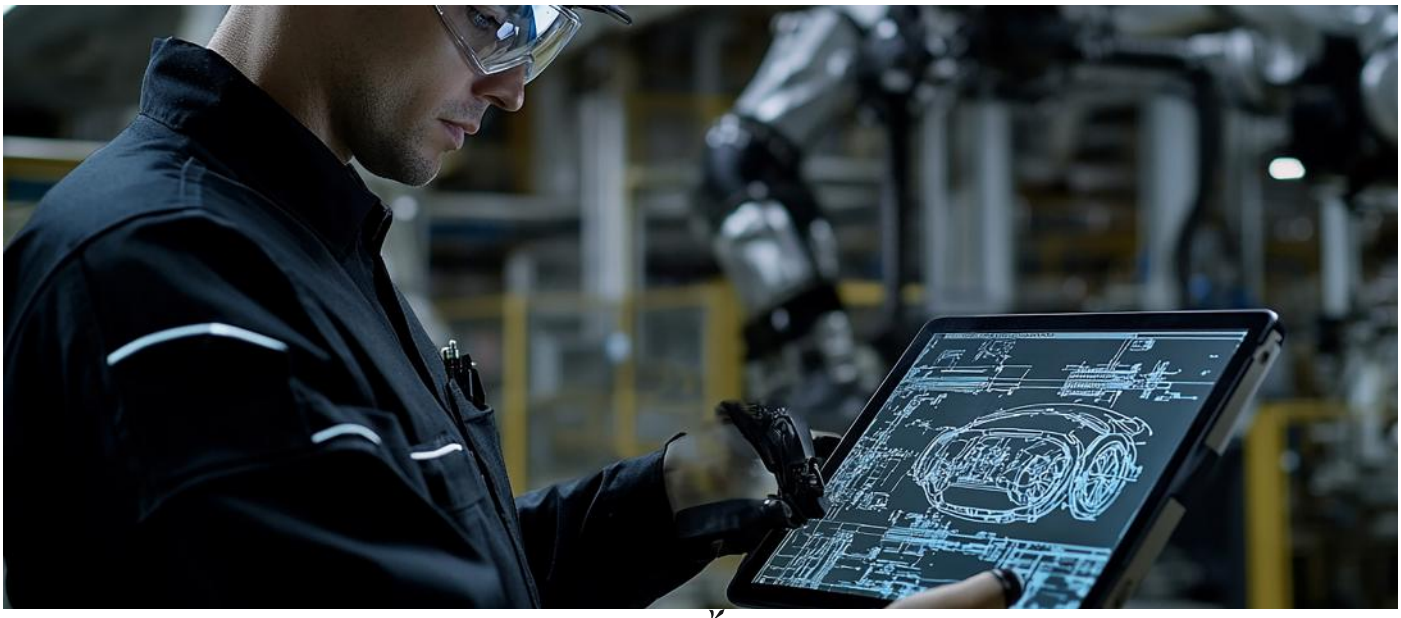

Vacuum Heat Treatment of Cutting Tools: Engineering Tool Life, Wear Resistance and Dimensional Stability

- By Nitin Chaudhari, CEO, Indo German Vacu Treat Pvt. Ltd.

Metallurgical Excellence Through Precision Vacuum Heat Treatment for Consistent Cutting-Tool Performance

The performance of a cutting tool is determined by far more than its geometry and cutting-edge design. Material selection, tool manufacturing processes, heat treatment, surface engineering and application conditions collectively determine how a tool performs in production.

As machining operations move towards higher cutting speeds, increased material removal rates, tighter dimensional tolerances and more demanding workpiece materials, the metallurgical condition of the cutting tool becomes increasingly critical.

For high-speed steels, hot-work tool steels and other tool materials, vacuum heat treatment is not simply a supporting manufacturing operation. It is a performance-defining process that determines hardness, toughness, dimensional stability, wear resistance and ultimately tool life.

For cutting-tool manufacturers, the challenge is therefore not only to achieve the required hardness, but to establish a controlled metallurgical structure that delivers repeatable performance from batch to batch.

This is where advanced vacuum heat treatment and plasma nitriding technologies can make a significant difference.

Why cutting tools demand controlled vacuum heat treatment

Cutting tools operate under a combination of

mechanical, thermal and tribological stresses. During machining, the cutting edge is exposed to high contact pressure, friction, elevated temperatures and cyclic loading.

A tool that is excessively hard may offer good wear resistance but can become susceptible to chipping or premature failure. Conversely, insufficient hardness can result in accelerated flank wear, deformation and loss of cutting-edge geometry.

The objective of heat treatment is therefore to achieve the right balance between:

- Hardness
- Toughness
- Wear resistance
- Dimensional stability
- Resistance to thermal shock
- Microstructural uniformity

For high-speed steel (HSS) tools in particular, achieving the required secondary hardness and controlling retained austenite are important aspects of the heat-treatment cycle. Variations in heating, soaking, quenching or tempering can translate directly into variations in tool performance.

The same principle applies to dies, punches, forming tools and other tooling used in cutting-tool manufacturing and related applications.

Vacuum heat treatment: Clean processing with Metallurgical control

Conventional heat treatment methods can expose tools to oxidation and decarburisation. These effects can be particularly undesirable for precision cutting tools, where surface condition and dimensional accuracy are critical.

Vacuum heat treatment provides a controlled processing environment with minimal exposure to atmospheric contaminants.

During vacuum hardening, the tool is heated under controlled conditions and subsequently quenched using a suitable gas-quenching cycle. The absence of an oxygen-rich atmosphere helps minimise oxidation and decarburisation, while precise control of temperature and cooling parameters supports repeatable metallurgical results.

For cutting-tool manufacturers, this offers several important advantages:

1. Repeatable metallurgical properties

Accurate control of the thermal cycle helps achieve consistent hardness and microstructure across batches.

2. Cleaner surfaces

Reduced oxidation helps maintain the condition of the tool surface and cutting geometry, reducing the need for extensive post-treatment cleaning or correction.

3. Better dimensional control

Precision tooling often requires tight dimensional tolerances. Controlled heating and gas quenching can help reduce distortion compared with less controlled heat-treatment methods.

4. Reduced surface contamination

The controlled vacuum environment is particularly beneficial for high-value tooling where surface quality is critical.

Modern vacuum heat-treatment systems can also employ controlled gas-quenching strategies to manage cooling rates according to component geometry and material requirements. This is particularly relevant for complex cutting tools where uncontrolled cooling can generate distortion or residual stresses.

Hardness alone does not define tool performance.

One of the common misconceptions in tool heat treatment is that higher hardness automatically means better tool life.

In reality, cutting-tool performance depends on the interaction between hardness, toughness, microstructure, retained austenite, carbide distribution and residual stresses.

A well-designed vacuum heat-treatment cycle therefore has to address comprehensive metallurgical aspects.

For example, excessive retained austenite can affect dimensional stability and hardness development. Proper control of austenitising, quenching and tempering conditions is essential to achieve the required transformation and stabilise the final structure.

Multiple tempering cycles, where specified by the tool material and application, are often an important part of establishing the desired combination of hardness and toughness.

The heat treater gives due importance to not just the required hardness specification, but also the tool material, geometry, manufacturing route and final application. That's why vacuum heat treatment cycles are designed at IGVT.

Plasma nitriding: surface engineering beyond bulk hardness

While vacuum hardening establishes the core mechanical properties of the tool, surface engineering can further enhance performance in applications where wear, friction and surface loading are dominant concerns. Plasma ion nitriding is one such technology.

The process introduces nitrogen into the surface of suitable ferrous materials, producing a hardened surface layer while retaining the properties of the underlying substrate.

For appropriate cutting-tool applications, plasma nitriding can provide:

- Increased surface hardness
- Improved wear resistance
- Better resistance to adhesive and abrasive wear
- Improved resistance to surface fatigue
- Enhanced performance under demanding operating conditions

The key advantage is that the treatment is focused on the surface rather than changing the bulk hardness of the entire tool.

This makes plasma nitriding particularly relevant for tooling where the substrate needs to retain sufficient toughness while the surface requires enhanced resistance to wear.

IGVT provides plasma ion nitriding as part of its vacuum and surface-engineering capabilities, supporting tooling applications where surface performance is a critical requirement.

Heat treatment must be designed around the tool—not treated as a standard batch process

Cutting tools come in many forms: drills, milling cutters, reamers, broaches, form tools, hobs, shaper cutters and specialised tooling.

Even when two tools are manufactured from the same steel grade, their heat-treatment requirements may differ because of variations in geometry, cross-section, edge thickness, tolerance and end application.

A robust heat-treatment approach therefore begins with understanding the complete process chain.

Material

The exact steel grade and its chemical composition influence the required austenitising temperature, quenching strategy and tempering cycle.

Geometry

Thin sections and sharp edges respond differently to heating and cooling than larger cross-sections. Complex geometries can also increase the risk of distortion.

Pre-treatment condition

The condition of the material before hardening—including prior annealing, machining and residual stresses—can influence final dimensional stability.

Heat-treatment cycle

Heating rate, austenitising temperature, holding time, quenching pressure and tempering parameters must be controlled according to the material and application.

Final requirements

Hardness, dimensional tolerances, surface condition and subsequent coating or finishing requirements should all be considered while developing the process.

This application-oriented approach is particularly important for precision cutting tools because a small dimensional change at the heat-treatment stage can influence the final cutting geometry.

The connection between heat treatment and PVD coating

Modern cutting tools increasingly combine metallurgical heat treatment with advanced surface coatings.

PVD coatings such as NOVA TiN, MultiNOVA (TiAlN), AltiNOVA (AlTiN) and other engineered coating systems can improve resistance to wear, oxidation and thermal loading. However, coating performance is influenced by the condition of the substrate.

A properly heat-treated substrate provides the foundation for a reliable coating system.

The sequence therefore matters:

Tool steel selection → machining → stress relief/pre-treatment → vacuum hardening → tempering → finishing → surface preparation → PVD coating

Each stage contributes to the final performance of the cutting tool.

An improperly treated substrate can compromise the benefits of even a high-performance coating. Conversely, a correctly engineered substrate and surface treatment can work together to deliver longer and more consistent tool life.

This is why cutting-tool manufacturers increasingly need heat-treatment partners who understand the complete tooling ecosystem rather than simply processing components against a hardness specification.

Managing distortion: a critical requirement for precision tooling

Distortion remains one of the most important concerns in heat treatment.

Cutting tools are often characterised by slender geometries, sharp edges, holes, slots and varying cross-sections. These features can respond differently during heating and quenching.

Residual stresses originating from material production or machining can further influence dimensional changes during heat treatment.

Vacuum processing combined with controlled gas quenching provides an effective route for managing these challenges. However, equipment alone does not eliminate distortion.

Process development, loading orientation, fixturing, heating strategy, quenching parameters and tempering practices all need to be considered.

At IGVT, customer-specific process development and optimisation form an important part of the technical support provided for vacuum heat-treatment applications. The company's capabilities include development and qualification of new vacuum heat-treatment cycles and process-improvement solutions.

Beyond hardness: measuring what actually matters

For cutting-tool manufacturers, successful heat treatment should be evaluated through more than a hardness reading.

A comprehensive quality approach can include:

- Hardness measurement
- Microstructural evaluation
- Retained-austenite assessment where required
- Dimensional inspection
- Case-depth measurement for nitrided components
- Surface inspection
- Process-parameter monitoring
- Traceability and batch documentation

These controls help connect the heat-treatment process with actual tool performance.

The objective should be process capability and repeatability—not simply achieving a number on a hardness tester.

The value of a commercial heat-treatment partner

For tool manufacturers, outsourcing heat treatment to a specialised commercial processor can provide access to dedicated equipment, metallurgical expertise and established process-control systems without the capital investment associated with developing an in-house facility.

For IGVT, this role goes beyond processing.

Indo-German Vacu Treat Pvt. Ltd. is a joint venture between Unitherm Engineers Limited and Systherms GmbH, Germany. Established in 2007, the company has developed capabilities in commercial vacuum heat treatment and surface engineering, with facilities strategically located in Pune, Bengaluru and Chennai. Its portfolio includes vacuum hardening, vacuum brazing, plasma ion nitriding, solution annealing and ageing.

Its focus on tool and die manufacturing makes the company relevant to cutting-tool manufacturers looking for controlled, repeatable and application-oriented heat-treatment solutions.

The company also operates with a qualified metallurgical and technical team and provides customer-specific process support, including development and qualification of vacuum heat-treatment cycles.

Building the next generation of cutting-tool performance

As machining technology continues to evolve, cutting tools will face increasing demands for higher productivity, longer tool life, tighter tolerances and improved consistency.

The response cannot come from tool geometry or coating technology alone.

Performance must be engineered across the complete manufacturing chain.

Precision heat treatment provides the metallurgical foundation. Surface engineering can further enhance wear performance. Advanced coatings can add another layer of protection. Together, these technologies can enable cutting tools to operate more reliably under increasingly demanding machining conditions.

For manufacturers of precision cutting tools, the right question is therefore not simply:

"What hardness should the tool achieve?"

The more important question is:

"What metallurgical and surface condition will allow this tool to deliver the required performance throughout its service life?"

Answering that question requires a combination of material knowledge, process control, heat-treatment expertise and application understanding.

That is where precision vacuum heat treatment becomes more than a manufacturing process—it becomes an integral part of cutting-tool engineering.

About Indo-German Vacu Treat

Indo-German Vacu Treat Pvt. Ltd. (IGVT) is a commercial vacuum heat-treatment and surface-engineering service provider in India, established as a joint venture between Unitherm Engineers Limited and Systherms GmbH, Germany. IGVT offers vacuum hardening, plasma ion nitriding, vacuum brazing, solution annealing and ageing services, supported by facilities in Pune, Bengaluru and Chennai. The company serves tooling, automotive, aerospace and other precision engineering applications with a focus on controlled processes, metallurgical expertise and customer-specific solutions.

Nitin Chaudhari
CEO, Indo German Vacu Treat Pvt. Ltd.

About the Author
Nitin Chaudhari is a seasoned business leader with over three decades of experience in the manufacturing and industrial sector, including more than 12 years in senior general management roles. As Chief Executive Officer of Indo German Vacu Treat Pvt. Ltd. (IGVT), he leads the organisation's strategic growth with a strong focus on customer-centricity, operational excellence, technology, and sustainable business development.
With extensive experience in manufacturing, operations, business transformation, and leadership, Nitin brings a strategic and hands-on approach to building high-performance teams and long-term customer partnerships. His leadership philosophy emphasises reliability, consistency, continuous improvement, and creating sustainable value for customers.
At IGVT, he is focused on strengthening the company's position as a trusted provider of advanced vacuum heat treatment and metallurgical solutions, while driving innovation and supporting India's evolving precision manufacturing ecosystem.

For more details, visit: www.igvtvacutreat.com
LinkedIn: https://www.linkedin.com/company/indo-german-vacu-treat-pvt-ltd

India's Leading Exhibition on Gear, Grinding & Power Transmission Technologies

iptex28
10th INTERNATIONAL POWER TRANSMISSION EXPO

Grindex INTERNATIONAL 2028
8th INTERNATIONAL EXPO ON GRINDING AND FINISHING PROCESS

2 - 4 March 2028

Chennai Trade Centre | Hall no. 1A, 1B, 2 & 3A

CONCURRENT EVENTS

gear TECHNOLOGY INDIA AWARDS

gti SUMMIT

SCAN HERE TO EXHIBIT

ORGANISED BY

virgo COMMUNICATIONS AND EXHIBITIONS (P) LTD

BOOKINGS OPEN

WWW.IPTEX-GRINDEX.COM

TaeguTec India Marks 25 Years of Advancing Manufacturing Excellence

- By Gear Technology India

TaeguTec India marked its 25th anniversary, celebrating a quarter-century of technological advancement, customer partnerships and contributions to India's evolving manufacturing landscape. The silver jubilee represented 25 years of growth since the company established its presence in India in 2000, anchored by the inauguration of its state-of-the-art Bengaluru manufacturing facility on 24 August 2001. Its journey closely mirrors the country's transition towards increasingly precise, automated and globally competitive manufacturing.

Over the years, TaeguTec India established itself as a provider of metal-cutting solutions, application expertise and technical support for manufacturers across a wide range of industries. Its customer base spanned automotive, aerospace, die and mould, energy, heavy engineering, miniature and general manufacturing.

The milestone was significant not only as a corporate anniversary but also as a reflection of the changing requirements of Indian manufacturers. As production environments became more demanding, manufacturers increasingly sought machining solutions that could deliver higher productivity, process stability, precision and cost efficiency.

From Cutting Tools to Machining Solutions

Since its establishment, TaeguTec India had focused on bringing advanced tooling technologies closer to Indian manufacturers. Its portfolio included cutting tools and tooling solutions for turning, milling, drilling, grooving, parting, threading and holemaking applications.

The company's approach extended beyond the supply of individual cutting tools. By combining products with application knowledge and technical support,

TaeguTec India worked with manufacturers to address specific machining challenges and improve overall process performance.

Its comprehensive product portfolio covered a broad range of machining requirements, including turning tools, milling cutters, drilling and holemaking solutions, threading tools, grooving and parting systems, tooling systems and related cutting-tool components. This broad offering enabled the company to support customers across diverse machining applications.

Supporting the Evolution of Indian Manufacturing

TaeguTec India's 25-year journey coincided with a period of significant transformation in the Indian manufacturing sector. Manufacturers increasingly adopted CNC machining, automation, multitasking equipment and flexible manufacturing systems while facing growing pressure to improve productivity and remain competitive in global markets.

These developments changed customer expectations from cutting-tool suppliers. Instead of simply sourcing tools, manufacturers increasingly looked for application-specific solutions capable of reducing cycle times, extending tool life, improving machine utilisation and maintaining consistent machining quality.

TaeguTec India responded to these requirements by strengthening its application engineering and technical support capabilities. Its teams worked closely with customers to understand machining conditions, identify areas for improvement and recommend solutions suited to specific production requirements.

The company's capabilities were particularly relevant to sectors such as automotive, aerospace, energy, mould and die, and heavy engineering, where precision, reliability and productivity remained critical considerations.

Local Capabilities and Global Technology

A key component of TaeguTec India's operations was its manufacturing facility in Bengaluru. The facility, spread across approximately 10,000 sq m, operated with certifications including AS9100 Rev D and ISO 9001:2015. It was also certified to ISO 14001:2015 for environmental management and ISO 45001:2018 for occupational health and safety.

The local manufacturing and technical capabilities – spearheaded by a dedicated Indian R&D team - complemented TaeguTec's global research and development resources in Korea. This combination enabled the company to address Indian market requirements while leveraging international expertise in cutting-tool technology.

Over the years, the company also strengthened its presence through its sales and technical support network, enabling it to engage with manufacturers across major industrial regions in the country.

Customer Trust and Employee Commitment

Reflecting on the silver jubilee, Mr L. Krishnan, Managing Director, TaeguTec India, said, "Our 25th anniversary is a proud moment for everyone associated with TaeguTec India. It reflects the trust of our customers, the commitment of our employees, and our shared determination to continuously raise the standards of manufacturing performance. We thank every customer, partner, and colleague who has been part of this remarkable journey."

L. Krishnan, Managing Director, TaeguTec India

The statement highlighted the importance of customer relationships and employee expertise in TaeguTec India's growth. The company's technical teams, sales personnel and other employees played a key role in developing long-term customer relationships and responding to increasingly complex machining requirements.

For TaeguTec India, the 25-year journey was therefore shaped not only by product and technology development but also by its ability to understand customers' manufacturing challenges and provide responsive technical solutions.

Sustainability in Manufacturing Operations

Alongside productivity and machining technology, TaeguTec India had also incorporated sustainability initiatives into its Bengaluru operations.

The company had implemented measures focused on resource conservation and environmental management, including rainwater harvesting, water reprocessing, a zero-discharge approach and the use

of renewable energy for 98% of its energy consumption. Wind and solar power formed part of its efforts to reduce its environmental impact, while green initiatives such as a Miyawaki-based plantation further contributed to its sustainability efforts.

These initiatives reflected the broader shift in the manufacturing industry towards integrating environmental considerations with operational efficiency and productivity.

A Silver Jubilee and a New Beginning

To commemorate its 25th anniversary, TaeguTec India organised a series of initiatives involving employees, customers, partners and other stakeholders. The celebrations provided an opportunity to recognise the contributions that had shaped the company's journey while reflecting on the opportunities emerging in the Indian manufacturing sector.

The anniversary came at a significant time for the country's industrial ecosystem. The expansion of domestic manufacturing, increasing automation, the growth of electric mobility, and rising opportunities in aerospace and defence were creating new requirements for advanced machining technologies.

These developments presented opportunities for tooling manufacturers to support the next phase of industrial growth by enabling manufacturers to achieve greater productivity, precision and process efficiency.

Looking Towards the Next 25 Years

As TaeguTec India completed 25 years in the country, the company remained focused on building on its established capabilities and responding to the next generation of manufacturing requirements.

Its priorities included advancing metal-cutting technologies, strengthening technical and customer support, and developing solutions aligned with emerging requirements in productivity, operational efficiency and sustainable manufacturing.

The company's silver jubilee thus represented both a celebration of its established presence and a transition into its next phase of growth. From its beginnings in India in 2000 to its position in 2026, TaeguTec India's journey reflected the broader evolution of the country's manufacturing sector.

With Indian manufacturers continuing to pursue greater precision, automation, productivity and global competitiveness, TaeguTec India's next chapter was set to focus on supporting these ambitions through advanced machining technologies, application expertise and long-term customer partnerships.

In this follow-up interview, Sushmita Das, Editor, Gear Technology India, interacted with Mr L. Krishnan, Managing Director, TaeguTec India, on the company's 25-year journey, the evolving needs of Indian manufacturers, and the latest developments in high-performance and application-specific cutting tools. Krishnan also discusses TaeguTec India's vision for the next five years, with a focus on sustainability, tungsten recycling, technological advancement, and supply chain security.

1.TaeguTec India has completed 25 years in India. What have been the key milestones in this journey?

Our foundational ambition was to build a world-class manufacturing organisation in India capable of competing globally. A major early milestone was establishing our state-of-the-art, fully air-conditioned manufacturing facility built strictly to global standards. This commitment allowed us to earn immense customer trust and emerge as one of the top three players in the industry within our first five years.

From a strategic and technological standpoint, our most defining milestone was the transition from a company historically rooted in tungsten powder processing into a highly specialised, cutting tool organisation. This evolution enabled us to consistently launch major, generational technology campaigns every three to five years—moving from our early TOP and Gold Rush lines to our recent high-feed SFEED-TEC and WIN-SFEED families. Furthermore, establishing a dedicated Indian R&D centre was also a crucial turning point; it allowed us to engineer custom solutions for local complexities.

2.How have customer requirements for cutting tools evolved over the past 25 years?

The most profound transformation is the industry's shift from price-sensitivity to risk-mitigation. In our early days, procurement was highly transactional, with customers focusing heavily on the initial acquisition cost of standard tooling. Today, manufacturers operate under compressed product life cycles and evaluate tools based entirely on the total cost of ownership and overall equipment effectiveness.

Customers now recognise the true economics of the shop floor: cutting tools account for merely 1% to 1.5% of the total manufacturing cost of a component. However, if an unreliable, low-cost tool fails, it forces millions of rupees worth of CNC machinery to sit idle, causing devastating financial losses through machine downtime. Consequently, customers no longer evaluate

us strictly on cost per edge; they demand absolute supply chain predictability, unwavering process reliability, rapid application support, and completely custom-engineered solutions to protect their margins.

3.What cutting-tool technologies do you see driving productivity and efficiency in Indian manufacturing?

Productivity today is driven by the seamless marriage of advanced metallurgical science with highly innovative and specialised tool geometries. As industries increasingly adopt difficult-to-machine alloys, high-feed and high-speed machining concepts are becoming essential. Our SFEED-TEC and WIN-SFEED families are prime examples of this, maximising output without sacrificing stability.

Furthermore, resource efficiency is playing a massive role in driving economic gains on shop floors. Technologies that allow customers to "right-size" their cutting tools are fundamentally changing the cost structure per component. For example, our compact Rhino lines provide the exact same rigidity and performance as standard, bulky ISO tools but completely eliminate the waste of oversized carbide.

4.How is TaeguTec India addressing the growing demand for high-performance and application-specific tooling?

Rather than developing a generic tool isolated by industry, we analyse the specific machining operation—like milling or drilling—against the precise workpiece material, such as titanium or superalloys. The core metallurgical challenges remain identical across these applications, whether the component is an aerospace turbine or a medical implant.

To deliver these application-specific tools rapidly, we rely heavily on our localised engineering footprint. Our Indian R&D centre allows us to analyse domestic shop-floor realities and engineer custom solutions locally. Because we are physically close to the customer, our application engineers can intervene early to deliver fully engineered, turnkey setups that help reduce risk in the manufacturing process.

5.What is your vision for TaeguTec India over the next five years, and what role will emerging technologies play?

Our vision is to continually redefine what is possible in Indian manufacturing by aggressively adapting to emerging industrial realities while ensuring absolute supply security for our partners.

Equally critical is our commitment to sustainability and circularity. Building on our achievement of operating our facility on 98% renewable energy, we will expand our vertical integration into tungsten recycling. By recovering high-purity tungsten from used carbide, we are actively building a secure, circular supply chain that mitigates global supply volatility and protects our customers.

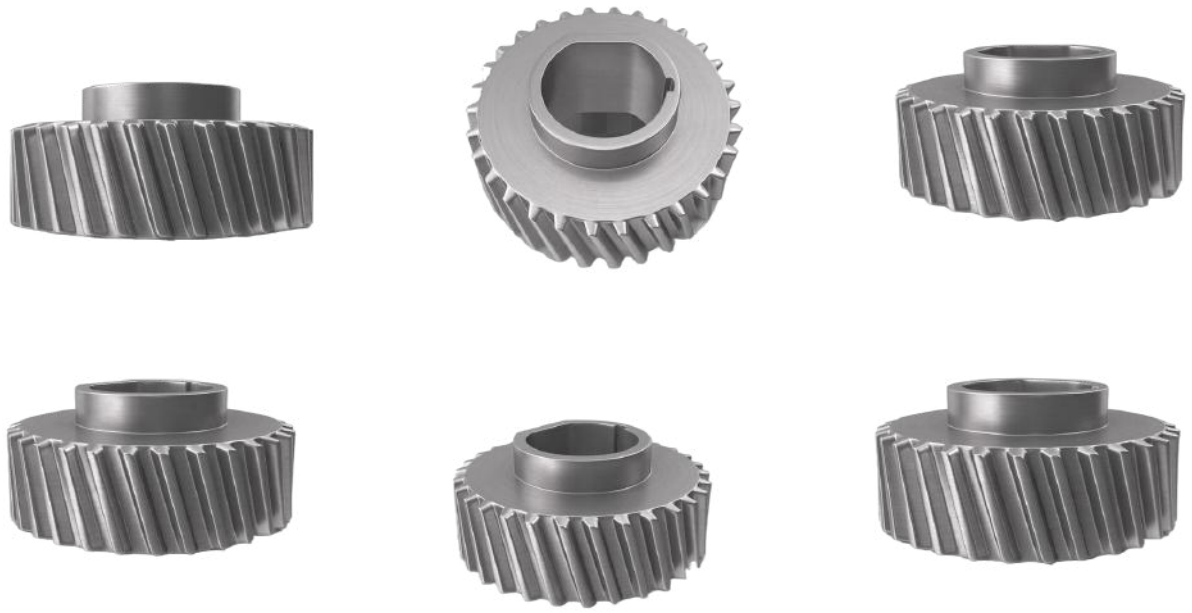

MRAM Expo 2026: Building a Dedicated Platform for India's Maintenance, Reliability and Asset Management Ecosystem

- By Sushmita Das

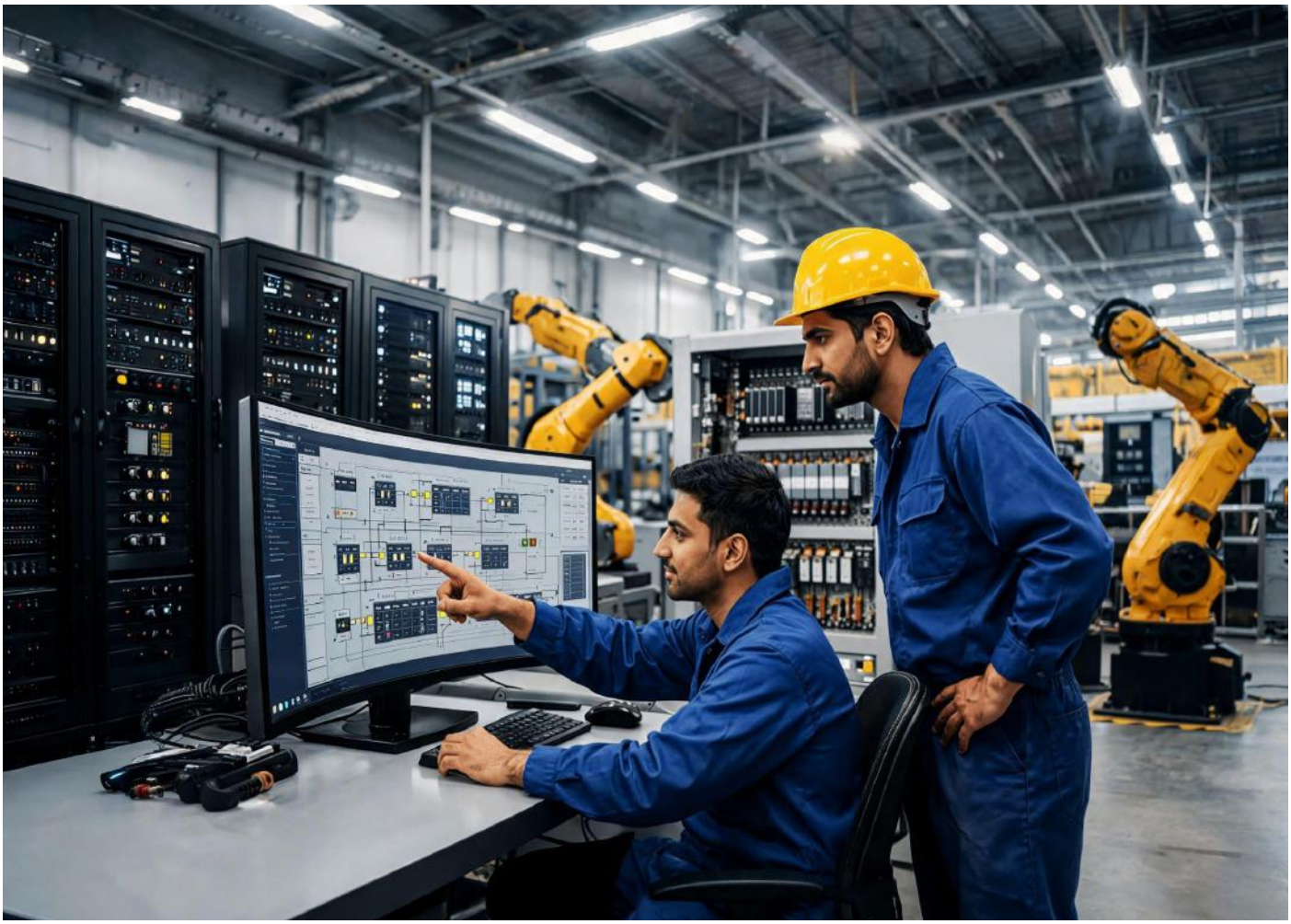

India's manufacturing industry is rapidly embracing smarter, connected and highly automated production systems, making maintenance, reliability and asset performance increasingly critical to operational efficiency and competitiveness. Reflecting this shift, MRAM Expo 2026 will bring together the country's maintenance and reliability ecosystem on a dedicated platform from 7–9 October 2026 at the Bombay Exhibition Centre (BEC), Mumbai.

With Virgo Communications & Exhibitions Pvt. Ltd. as its organiser, MRAM Expo 2026 is being positioned as India's first dedicated exhibition for Maintenance, Reliability and Asset Management (MRAM). The event will serve as a meeting point for technology providers and professionals responsible for plant maintenance, reliability, operations and asset performance across India's industrial sector.

For industries such as automotive, engineering, power, oil & gas, metals, mining and process manufacturing—where equipment availability and production continuity directly influence productivity—the ability to predict failures, optimise maintenance schedules and maximise asset life is becoming increasingly critical.

From Reactive Maintenance to Predictive Reliability

The traditional approach to industrial maintenance is undergoing a fundamental transformation. Instead of relying primarily on scheduled maintenance or responding

after equipment failure, manufacturers are increasingly adopting condition-based, predictive and prescriptive maintenance strategies.

The growing integration of sensors, Industrial IoT, artificial intelligence, machine learning, advanced analytics and connected equipment is enabling companies to monitor asset health in real time and identify potential failures before they lead to costly downtime.

This shift is particularly relevant to the machinery and gear manufacturing ecosystem, where the performance of critical equipment—including machine tools, gear grinding machines, heat-treatment systems, compressors, motors, pumps and production lines—can have a direct impact on productivity and product quality.

MRAM Expo 2026 aims to address this changing industrial landscape by bringing technologies, methodologies and industry expertise together under one roof.

100+ Exhibitors and 1,000+ Solutions

The three-day exhibition is expected to feature 100+ exhibitors showcasing more than 1,000 products and solutions across a wide range of maintenance and asset-management technologies.

The exhibition will cover areas including:

- Predictive and prescriptive maintenance
- Industrial IoT and connected assets
- AI and machine learning
- Digital twin technology
- Remote condition monitoring
- CMMS and Enterprise Asset Management
- Reliability engineering
- Inspection and non-destructive testing
- Lubrication systems
- MRO solutions
- Robotics and automation
- Industrial safety

For manufacturing companies, the convergence of these technologies represents an opportunity to move towards more data-driven maintenance decisions while improving equipment availability, reducing unplanned downtime and extending asset life.

A Focus on Reliability Engineering

Reliability is increasingly becoming a business priority rather than simply a maintenance function. Equipment failures can affect production schedules, energy consumption, product quality, workplace safety and overall operating costs.

MRAM Expo's focus on Reliability Engineering, Reliability-Centred Maintenance (RCM), Total Productive Maintenance (TPM) and Asset Management therefore addresses an important requirement across India's industrial ecosystem.

The event is expected to attract more than 4,000 industry professionals from sectors including manufacturing, automotive, oil & gas, petrochemicals, pharmaceuticals, power, metals, mining, infrastructure, food processing, paper, water treatment, defence and healthcare.

The visitor profile will include maintenance managers, reliability engineers, plant heads, operations leaders, asset managers, project managers, procurement professionals and digital transformation specialists.

Technical Conference to Explore Emerging Practices

Alongside the exhibition, MRAM Expo 2026 will host a Technical Conference featuring 20+ industry speakers and 300+ delegates.

The MRAM Expo 2026 Conference brings together industry leaders, maintenance and reliability experts, asset managers, technology providers, and manufacturing professionals to explore the future of Maintenance, Reliability & Asset Management. Across two days, the conference will focus on asset performance, reliability excellence, digital transformation, AI, predictive maintenance, risk-based strategies, asset integrity, safety, and workforce development.

Through keynote addresses, panel discussions and fireside chats, the conference will offer practical insights into building high-reliability, data-driven and sustainable asset-intensive operations, helping organisations move from reactive maintenance to strategic asset management and long-term business value.

Know the full agenda at: https://mramindia.com/conference/

The conference will focus on practical challenges and emerging approaches in asset management and reliability. Key themes will include Asset Management, ISO 55000, Reliability Engineering, RCM, TPM, predictive maintenance, AI-driven asset strategies, Industry 4.0 and operational excellence.

The programme is expected to provide a platform for industry practitioners to share case studies, experiences and strategies for improving asset performance.

Interactive workshops will further complement

the conference, providing participants with practical learning opportunities around inspection technologies, reliability improvement, digital maintenance tools, asset optimisation and maintenance planning.

Industry-Led Platform

The event is supported by a National Advisory Committee comprising senior professionals from organisations including Reliance Industries Limited, Viraj Profiles, Haldia Petrochemicals, NTPC GE Power Services, HPCL Rajasthan Refinery, Institute of Asset Management (India), JSW JFE Steel, Kalyani Steels, Shapoorji Pallonji Armada and the Council of Vibration Specialists.

The participation of industry leaders and specialists is intended to strengthen the technical relevance of the platform and encourage greater exchange between technology providers and industrial users.

Why Reliability Matters to Modern Manufacturing

For today's manufacturers, reliability is closely linked to competitiveness. A machine that operates consistently with minimal unplanned stoppages contributes not only to higher productivity but also to improved resource utilisation and predictable production planning.

In the gear manufacturing industry, for instance, the reliability of production and inspection equipment can influence machining accuracy, cycle times, tool consumption and overall throughput. Similarly, failures in lubrication systems, bearings, motors, drives or other critical components can result in production interruptions and maintenance costs.

The emergence of digital condition monitoring and predictive analytics is therefore opening new possibilities for manufacturers to understand equipment behaviour and intervene before failures occur.

MRAM Expo 2026 provides a dedicated forum for exploring these developments and understanding how maintenance strategies are evolving alongside Industry 4.0 and smart manufacturing.

Connecting Technology with Industrial Applications

Beyond the exhibition and conference, MRAM Expo will provide opportunities for live demonstrations, B2B meetings, networking and direct interaction with solution providers.

With more than 4,500 sq. m. of exhibition space, the event is designed to facilitate technology discovery as well as business and knowledge exchange.

For industrial users, this could provide an opportunity to evaluate emerging solutions for their maintenance challenges, while technology companies can engage directly with professionals responsible for plant reliability, asset performance and operational efficiency.

Towards More Reliable and Future-Ready Plants

The future of industrial maintenance is increasingly moving towards a model where equipment data, engineering expertise and digital technologies work together to support better decisions.
As Indian manufacturing continues to invest in automation, connected machinery and smart production systems, the importance of reliability and asset management will only increase.

MRAM Expo 2026 aims to provide a dedicated platform for this evolving ecosystem—bringing together maintenance professionals, reliability specialists, technology providers and industrial decision-makers to explore how organisations can build more reliable, efficient and future-ready operations.

MRAM Expo 2026 at a Glance

Dates: 7–9 October 2026
Venue: Bombay Exhibition Centre (BEC), Mumbai
Organiser: Virgo Communications & Exhibitions Pvt. Ltd.
Exhibitors: 100+
Products & Technologies: 1,000+
Expected Visitors: 4,000+
Conference Speakers: 20+
Conference Delegates: 300+
Exhibition Area: 4,500 sq. m.

Gear Technology India is proud to be associated with MRAM Expo 2026 as its Media Partner, supporting the event's vision of bringing greater attention to maintenance, reliability and asset management across India's industrial landscape. Through its editorial and digital platforms, Gear Technology India will help amplify industry insights, technology developments and key conversations emerging from this dedicated platform.

Sushmita Das
Associate Editor
Gear Technology India

4th GSSE GLOBAL STAINLESS STEEL EXPO 2027
EXPO | SUMMIT | WORKSHOPS | AWARDS

Co - Located Expo
STAINLESS STEEL PROMACH EXPO 2027

16 17 18 SEP 2027
HALL 6 | BOMBAY EXHIBITION CENTRE | MUMBAI | INDIA

Co - Organised By
ISSDA STAINLESS STEEL

Supported By
इस्पात मंत्रालय
MINISTRY OF STEEL

International Trade Fair for Stainless Steel Materials, Products & Processing Technologies

Key Highlights

250+	12,000+	20,000+	12+	200+	1000+
GLOBAL EXHIBITORS	TRADE VISITORS	SQM. EXPO AREA	INTERNATIONAL COUNTRIES	CONFERENCE SPEAKERS	BUYER-SELLER MEETINGS

BOOKINGS OPEN NOW!

Contact Us

Augustine J W
Business Vertical Head
Virgo Communications and Exhibitions (P) Ltd
+91 9945695390, augustine@virgo-comm.com

To Exhibit!

Download Brochure!

Concurrent Events
STAINLESS STEEL SUMMIT 2027
WELDING & FABRICATION WORKSHOPS

Organised By
virgo COMMUNICATIONS AND EXHIBITIONS (P) LTD

Official Media Partner
STAINLESS TODAY
The Premier Source of News & Insights

Beyond Vibration: A Topological Proof for Early Gear Wear in Heavy-Duty Transmissions

- By Anureet Das, Marine Engineer, Shipping Corporation of India

Technical Concept Paper | Gear Diagnostics, Nonlinear Dynamics, Topological Data Analysis

Introduction

In the heavy engineering sector—spanning offshore rigs to mining belts—the gearbox is a critical point of failure. Despite advances in metallurgy and machining, drivetrain monitoring remains fundamentally reactive.

Traditional Condition-Based Monitoring (CBM) relies heavily on Fast Fourier Transforms (FFT) to track Gear Mesh Frequency (GMF) and RMS vibration thresholds. This approach has an important limitation: it generally waits for degradation to become energetic enough to produce a measurable vibration signature. By the time a conventional vibration sensor flags a significant anomaly, micro-pitting may already have progressed toward macroscopic spalling, at which point the metallurgical damage is irreversible.

A more sensitive prognostic approach is to move beyond vibration amplitude and examine the geometric structure of the machine's acoustic and vibration signature. Topological Data Analysis (TDA), combined with nonlinear dynamics and multivariate anomaly detection, provides a framework for investigating changes in the underlying dynamical state of a transmission.

The Mechanical Reality: A 50-Ton Hoist Case Study

Consider a heavy-duty crane hoist operating under a 50-metric-ton load, corresponding to approximately 490.5 kN of wire-rope tension. The gearbox uses a 1:30 reduction ratio. A 1500 RPM motor therefore produces an output speed of approximately 50 RPM at the bull gear.

Under this loading, Hertzian contact pressure at the pinion–bull-gear interface can reach the gigapascal range. The system relies on elastohydrodynamic lubrication (EHL) to maintain separation between the contacting surfaces, with ISO VG 150 gear oil (HV-150) assumed for this illustrative case.

At elevated local mesh temperatures, the kinematic viscosity of the lubricant decreases substantially. The temperature dependence can be represented using the ASTM D341 / Walther relationship (often referred to as the Walther equation). At approximately 85°C, the viscosity may fall far below its nominal 150 cSt value, depending on the actual lubricant formulation and viscosity index.

Within the highly loaded contact zone, pressure can significantly increase the effective dynamic viscosity of the lubricant. This pressure–viscosity behaviour is commonly represented by the Barus relationship. The resulting EHL film is essential to maintaining surface separation and preventing excessive asperity interaction.

The Mechanism of Failure: Emulsification and Clearance

Water ingress is a common contamination mechanism in industrial gearboxes. When water enters the lubricant, agitation by the meshing gears can produce a water-in-oil dispersion or emulsion.

Water contamination can reduce lubricant performance and compromise film formation, although the precise mechanism is more complex than a simple change in bulk modulus. Loss of film thickness, additive degradation, corrosion, foaming, and altered rheology can all contribute to increased surface interaction.

As the lubricant film becomes inadequate, asperity contact can increase. Repeated micro-contacts can initiate or accelerate micro-pitting and surface fatigue. Progressive surface damage changes the effective contact geometry and can introduce additional modulation, impulsive components, and changes in the dynamics of the gear mesh.

A key premise of the proposed approach is that these early changes may first appear as changes in the structure of the measured signal rather than as a large increase in its overall RMS amplitude.

The Mathematical Framework: Detecting Changes in Dynamical Structure

To investigate whether gear wear can be detected before a conventional vibration-amplitude alarm is reached, the raw acoustic or vibration signal can be reconstructed into a multidimensional representation of the underlying dynamics.

For an illustrative 1:30 crane-hoist gearbox

sampled at 10 kHz, consider two operating states: State A (healthy lubricant and gear mesh) and State B (water-contaminated lubricant with early micro-pitting). The example assumes that RMS vibration remains below a nominal 4.5 mm/s alarm threshold in both states.

The following methods form a complementary analytical chain: delay-coordinate embedding reconstructs the state space; nonlinear-dynamics metrics quantify trajectory stability; Mahalanobis distance evaluates multivariate deviation; and persistent homology measures changes in geometric structure.

1. Takens' Delay-Coordinate Embedding

Rather than representing the measurement only as a one-dimensional time series or frequency spectrum, the signal can be reconstructed into a multidimensional phase-space representation using Takens' delay-coordinate embedding.

For a scalar signal x(t), the reconstructed state vector is:

2. Jacobian Matrix and Lyapunov Exponents

Once a reconstructed state space is available, local dynamical behaviour can be studied through an estimated Jacobian matrix. The Jacobian describes how small perturbations in the reconstructed state evolve locally.

From an appropriate dynamical model or local linear approximation, Lyapunov exponents characterise the average rate at which nearby trajectories converge or diverge. A positive maximal Lyapunov exponent is commonly associated with sensitive dependence on initial conditions and chaotic dynamics.

In this illustrative scenario:
- State A (healthy): $\lambda_{max} = 0.12$
- State B (micro-pitting): $\lambda_{max} = 1.84$

These values should be treated as simulated/example outputs, not as experimentally established thresholds. Their value is in demonstrating the proposed diagnostic logic: a change in dynamical stability may be detectable even when RMS amplitude remains below an alarm limit.

3. Mahalanobis Distance for Covariant Anomaly Detection

A mechanical anomaly should be distinguished from normal operating changes, such as load or speed variations. Mahalanobis distance provides a multivariate measure of how far an observation lies from a reference distribution while accounting for covariance among variables.

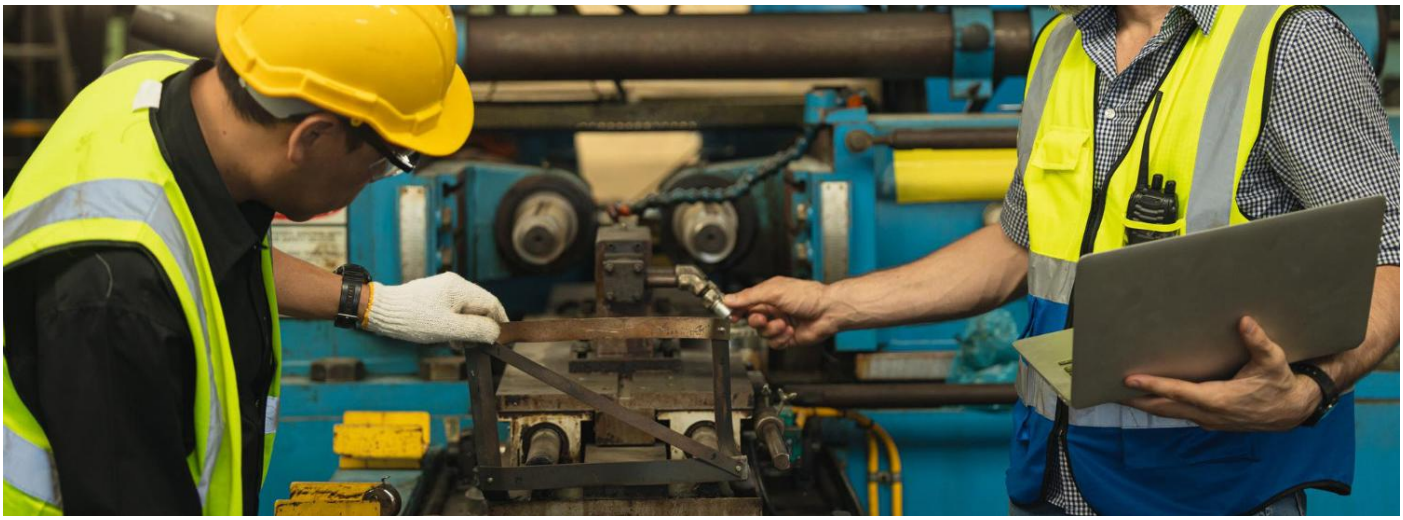

For a feature vector containing quantities such as motor RPM, acoustic amplitude, and structural vibration, the distance is:

4. Topological Data Analysis and Wasserstein Distance

Persistent homology provides a way to characterise the shape of point clouds in reconstructed state space across multiple spatial scales. In particular, H1 features represent loop-like structures in the filtration.

The persistence diagram of a healthy reference state can therefore be compared with that of a potentially worn state. Wasserstein distance provides one quantitative measure of the difference between the two persistence diagrams.

For the illustrative example:
- Baseline Wasserstein-distance variation: 0.02–0.05
- State B Wasserstein distance: 2.84

Again, these numerical values are simulation/example values and must be calibrated against experimental data before being used as an industrial alarm or prognosis threshold.

Conclusion: Toward Deterministic Maintenance

In the illustrative scenario, a large Mahalanobis distance and a substantial Wasserstein distance coincide with a change in the reconstructed dynamical structure. At the same time, conventional RMS vibration remains below the nominal alarm threshold.

The engineering proposition is therefore not that topology replaces FFT, but that topology and nonlinear-dynamics features can complement conventional condition monitoring by exposing structural changes that amplitude-only indicators may miss.

The practical objective is to identify the transition from normal operation to early degradation as close as possible to the onset of the underlying physical change. If validated experimentally, such a framework could support a shift from reactive replacement toward earlier intervention, improved maintenance planning, and higher equipment availability.

The central hypothesis is simple: before a gearbox produces a large vibration alarm, its measured dynamics may already have changed shape. Detecting that change may provide an earlier window for action.

Core Equations

Takens' Delay-Coordinate Embedding
$x_v(t) = [x(t), x(t + \tau), x(t + 2\tau), \ldots, x(t + (d - 1)\tau)]$

MacCoull–Walther Equation (Kinematic Viscosity)
$\log_{10}(\log_{10}(v + 0.7)) = A - B \cdot \log_{10}(T)$

Barus Equation (Dynamic Viscosity)
$\eta_p = \eta_0 \cdot e^{\wedge}(\alpha P)$

Mahalanobis Distance
$D_M(x) = \sqrt{[(x - \mu)^T \cdot \Sigma^{-1} \cdot (x - \mu)]}$

Wasserstein Distance
$W_p(D_healthy, D_worn) = [\inf_\gamma (\Sigma \|x - \gamma(x)\|^p)]^{\wedge}(1/p)$

Anureet Das
Marine Engineer
Shipping Corporation of India

Lightweight Gearing: Engineering Efficiency Driving the Future of Power Transmission

- By Chandrasekaran M

"Lightweight gears are not merely about reducing weight—they represent the convergence of materials science, intelligent design and advanced manufacturing to deliver higher efficiency, greater precision and sustainable mechanical performance."

1. Introduction

Mechanical gearing remains one of the most fundamental technologies enabling modern power transmission. From automotive drivetrains and industrial machinery to robotics, aerospace systems, renewable energy equipment and precision instruments, gears provide accurate transmission of torque, speed and motion with exceptional reliability. The overall efficiency of any transmission system depends not only on gear geometry but also on material selection, manufacturing precision, surface integrity, lubrication and tribological performance.

As industries increasingly pursue electrification, lightweight mobility and sustainable manufacturing, reducing component mass has become a major engineering objective. Among drivetrain components, gears contribute significantly to rotational inertia. Consequently, lightweight gearing has emerged as an advanced design philosophy aimed at minimising weight while preserving strength, fatigue life, dimensional accuracy and operational reliability.

Rather than simply removing material, lightweight gearing integrates optimised geometry, advanced materials, intelligent manufacturing and surface engineering to achieve superior power density and higher transmission efficiency.

2. Fundamentals of Gearing

A gear is a toothed mechanical component designed to transmit rotational motion and torque between shafts through positive mechanical engagement. Unlike friction-based drives, gears provide accurate speed ratios without slip, making them indispensable for high-precision engineering applications.

Modern gear systems perform several critical functions:

- Efficient power transmission
- Speed and torque conversion
- Directional motion control
- Positioning accuracy
- High load-carrying capability
- Long-term operational reliability

3. Common Types of Gears

Depending on application requirements, different gear configurations are employed.

Spur Gears

Simple geometry, high efficiency and economical manufacturing make spur gears suitable for general industrial power transmission.

Helical Gears

Inclined tooth geometry enables smoother engagement, lower vibration and reduced noise, making them widely adopted in automotive and EV transmissions.

Bevel Gears

Used to transfer motion between intersecting shafts, particularly in differential assemblies and right-angle drives.

Worm Gears

Provide extremely high reduction ratios and self-locking capability for lifting and positioning applications.

Planetary Gears

Offer high torque density, compact packaging and excellent load sharing, making them ideal for electric vehicles and aerospace gearboxes.

Precision and Harmonic Gears

Widely used in robotics, semiconductor equipment and aerospace actuation systems where extremely low backlash and high positional accuracy are essential.

4. Why Lightweight Gearing?

Traditional gear systems are primarily designed to withstand heavy mechanical loads. However, increasing performance demands require gears that deliver equal or greater strength while significantly reducing rotating

mass.

Reducing gear weight offers several engineering advantages:

- Lower rotational inertia
- Faster dynamic response
- Improved acceleration and deceleration
- Reduced energy consumption
- Lower bearing loads
- Enhanced NVH (Noise, Vibration and Harshness)
- Increased power-to-weight ratio
- Improved overall drivetrain efficiency

For electric drive systems, where every watt of energy directly influences vehicle range, lightweight gearing has become a key enabling technology.

5. Materials Enabling Lightweight Gear Design

The evolution of lightweight gearing has been driven primarily by advances in materials engineering.

High-Strength Alloy Steels

Carburized alloy steels continue to dominate heavy-duty applications because of their excellent fatigue resistance and core toughness.

Titanium Alloys

Titanium provides an exceptional strength-to-weight ratio together with outstanding corrosion resistance, making it highly attractive for aerospace transmissions despite its higher manufacturing cost.

Aluminum Matrix Composites

These materials significantly reduce component mass while maintaining adequate stiffness for medium-load applications.

Advanced Polymer Composites

Fibre-reinforced engineering polymers are increasingly being investigated for EV auxiliaries, medical devices and low-load robotic transmissions because of their lightweight nature and inherent vibration damping characteristics.

Powder Metallurgy Materials

Near-net-shape manufacturing reduces machining requirements while enabling complex lightweight gear geometries with high material utilisation.

6. Surface Engineering for Lightweight Gears

Reducing gear weight must not compromise wear resistance or fatigue performance. Therefore, modern lightweight gears increasingly rely on advanced surface engineering.

Common surface enhancement techniques include:

- Carburizing
- Nitriding
- Physical Vapour Deposition (PVD)
- Diamond-Like Carbon (DLC) coatings
- hot peening
- Superfinishing

These treatments significantly improve surface hardness, reduce friction, enhance scuffing and micro-pitting resistance and extend service life without increasing component weight.

7. Manufacturing Technologies

Advanced manufacturing methods are redefining the production of lightweight gears.

Additive Manufacturing

Metal additive manufacturing enables lattice structures, internal cooling channels and topology-optimised geometries that are impossible using conventional machining.

Precision Machining

Five-axis CNC machining, skiving, power honing and profile grinding deliver micron-level accuracy while maintaining superior tooth geometry.

Powder Metallurgy

Provides economical production of complex gear profiles with minimal material waste.

Hybrid Manufacturing

Combining additive manufacturing with precision machining offers high-performance gears featuring optimised internal structures and precision-finished tooth surfaces.

8. Lightweight Gearing Across Key Industries

Automotive

Lightweight gears reduce drivetrain inertia, improve fuel economy and enhance vehicle responsiveness. Applications include manual and

automatic transmissions, steering systems, transfer cases and differentials.

Electric Vehicles

Electric motors operate at high rotational speeds with unique torque characteristics, requiring compact and efficient gear systems.

Lightweight planetary and helical gearsets contribute to:

- Extended driving range
- Higher drivetrain efficiency
- Lower transmission losses
- Reduced acoustic noise
- Improved battery utilisation

Robotics and Automation

Industrial robots, collaborative robots, surgical robots and humanoid systems demand extremely compact transmissions.

Lightweight harmonic drives, cycloidal reducers and strain-wave gearing provide:

- High reduction ratios
- Exceptional positioning accuracy
- Minimal backlash
- Reduced actuator loading
- Improved payload-to-weight ratio

Precision Engineering

Semiconductor manufacturing, optical systems, medical devices and measuring instruments require gears with extremely high dimensional accuracy.

Reducing inertia enables:

- Faster positioning
- Higher repeatability
- Reduced vibration
- Improved motion control

Aerospace

Aerospace represents one of the most demanding applications for lightweight gearing.

Aircraft engines, helicopter gearboxes, satellites, UAVs and spacecraft require gears possessing:

- High fatigue strength
- Excellent thermal stability
- Outstanding reliability
- Exceptional strength-to-weight ratio

Every kilogram removed from a transmission contributes directly to fuel savings, increased payload capacity and improved mission efficiency.

9. Digital Engineering and Design Optimisation

The next generation of lightweight gears is increasingly being designed using digital engineering tools.

Modern development integrates:

- Finite Element Analysis (FEA)
- Multi-body dynamics simulation
- Topology optimization
- Digital twins
- Computational tribology
- Machine learning algorithms
- AI-assisted design optimization

These technologies enable engineers to predict stress concentrations, optimise tooth geometry, minimise vibration and improve durability before physical prototypes are manufactured.

10. Smart Gears and Industry 4.0

Future gear systems will evolve from passive mechanical components into intelligent transmission systems.

Embedded sensors integrated within gears and gearboxes will enable:

- Real-time condition monitoring
- Wear detection
- Temperature monitoring
- Lubrication assessment
- Predictive maintenance
- Remaining useful life estimation

Such smart gear systems will significantly improve equipment reliability while reducing maintenance costs and unplanned downtime.

11. Research Directions

Current research focuses on developing transmission systems that combine lightweight construction with higher efficiency and longer service life.

Major research areas include:

- Bio-inspired gear geometries
- Functionally graded materials
- Nanostructured wear-resistant coatings
- Hybrid composite gears
- Advanced tribology
- Noise and vibration optimization

- Sustainable manufacturing
- AI-driven generative gear design
- Self-lubricating gear systems
- Digital manufacturing and virtual validation

These developments are expected to redefine gear design for electric mobility, aerospace, robotics and renewable energy applications.

12. Conclusion

Lightweight gearing is no longer simply a strategy for reducing component mass; it has become a critical enabler of next-generation mechanical power transmission. By combining advanced materials, precision manufacturing, optimised geometry, intelligent surface engineering and digital design methodologies, lightweight gears deliver higher power density, improved efficiency, superior dynamic response and enhanced operational reliability.

As industries continue to embrace electrification, automation and sustainability, lightweight gearing will remain at the forefront of innovation, enabling quieter, smarter and more energy-efficient transmission systems across automotive, electric mobility, robotics, aerospace, industrial automation and precision engineering.

Chandrasekaran M is a Research Scholar (PhD) at the National Institute of Technology Calicut, working on advanced gear steel alloy composites for high-performance power transmission systems. He also serves as an Assistant Professor in the Department of Mechatronics Engineering at SRM Institute of Science and Technology, Chennai. His research interests include gear design, gear failure analysis, rolling contact fatigue, alloy design, and finite element analysis using ANSYS and ABAQUS.

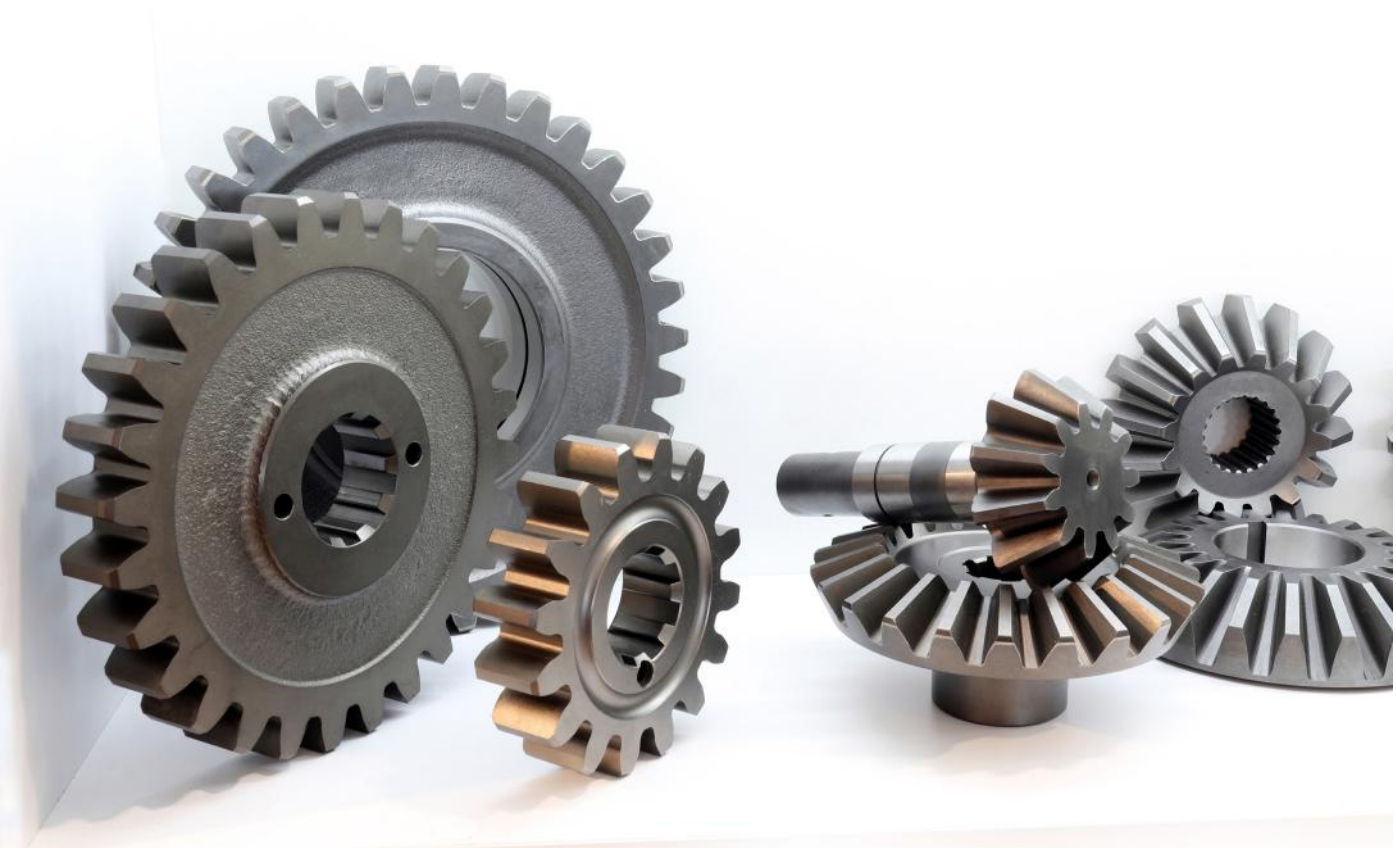

Gleason Gear Technology Seminars 2026: Advanced Gear Technology Solutions for India

- By Gleason Corporation

On August 10 and 12, 2026, Gleason welcomed customers and industry professionals to its India Customer Seminars in Pune and Delhi. Under the theme "Advanced Gear Technology Solutions – Design, Manufacture, Measure," the two events provided a comprehensive overview of current developments across the entire gear manufacturing value chain for cylindrical and bevel gears.

International Gleason experts shared their knowledge and practical experience in gear design, manufacturing, finishing, inspection, tooling and workholding. The program was designed to address both today's production challenges and the increasing demands for productivity, quality and acoustic performance in modern gear applications.

The technical sessions began with a look at gear and transmission design using KISSsoft Design Software, highlighting the growing importance of integrated digital engineering tools in the development and optimisation of gear systems.

Cylindrical gear manufacturing technology lectures covered soft cutting of gears, including current applications, as well as hobbing, chamfering, shaping and power skiving processes, complemented by corresponding cutting tool systems, followed by an in-depth overview of hard finishing technologies, ranging from skive hobbing and gear honing to threaded wheel grinding and profile grinding.

For bevel gear manufacturers, the program addressed state-of-the-art bevel gear production systems, including bevel gear design and optimisation with GEMS Engineering and Manufacturing System, soft and hard machining processes, including bevel gear cutting, grinding, lapping, and testing, as well as latest tool systems.

Quality assurance and metrology represented another important part of the agenda. Experts discussed approaches for ensuring end-product quality as well as the latest developments in gear metrology, including single-flank and double-flank testing, tactile inspection at submicron level, as well as laser measuring of gears. Particular attention was paid to the interpretation and analysis of measurement results and their relationship to the noise and vibration behaviour of manufactured gears—an increasingly important consideration for applications with demanding NVH requirements.

The technical program was completed by an overview of the latest workholding developments, demonstrating how accurate and reliable clamping solutions contribute to process stability, productivity and consistent part quality throughout cylindrical and bevel gear manufacturing.

Beyond the presentations themselves, the seminars were characterised by exceptionally active participation. Both locations attracted a strong attendance and generated very positive feedback. The lively question-and-answer sessions following the presentations created ample opportunity for direct interaction between gear technology experts, detailed discussion of individual applications and clarification of specific technical challenges.

The exchange continued during the evening group dinners, where participants were able to connect in a more informal setting, strengthen relationships and continue many of the technical discussions initiated throughout the day.

For both the participating customers and the presenters, the Pune and Delhi seminars proved to be highly rewarding events. They combined technical expertise, practical manufacturing knowledge and open dialogue while demonstrating how closely design, manufacturing and measurement must interact to achieve competitive gear production.

The next opportunity for gear training will be the Gleason Bevel Gear School, Jan 28-29, 2027, with a focus on bevel gear technology basics and state-of-the-art manufacturing systems, further emphasising the company's commitment to knowledge transfer and technical education.

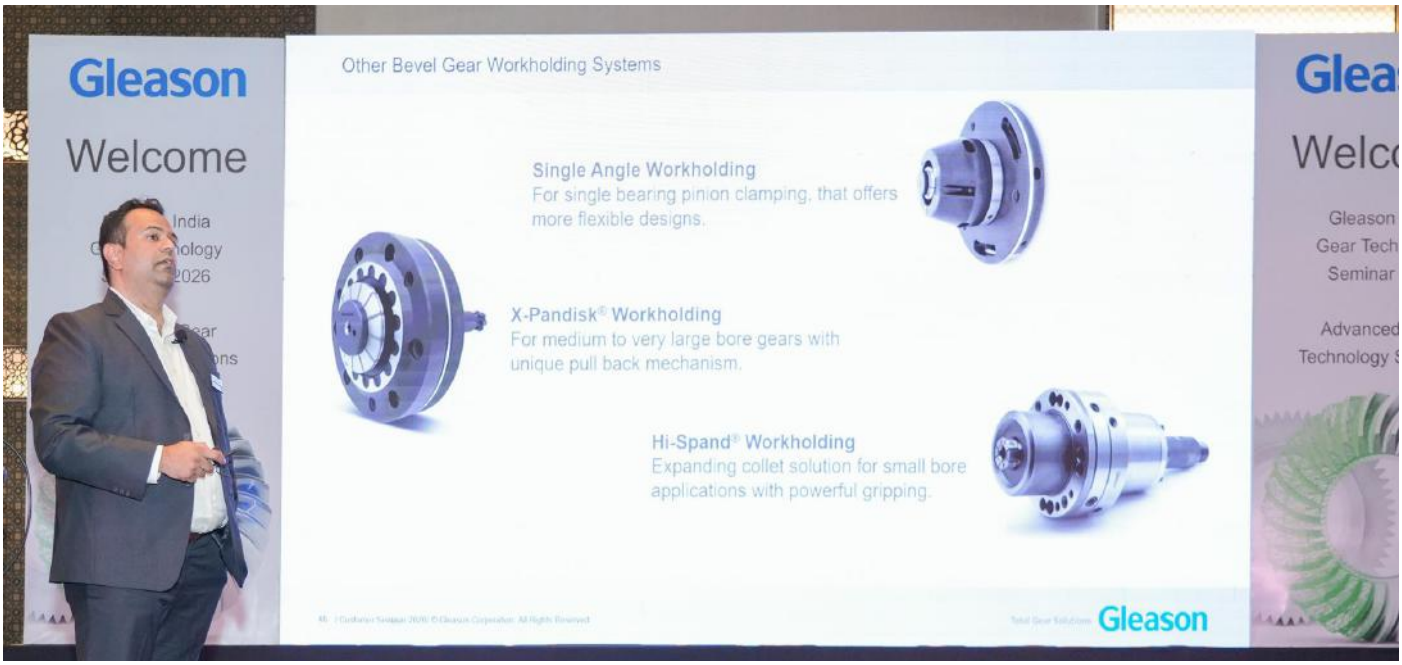

SECO/WARWICK Marks a Milestone with Its Tenth Vacuum Furnace for Global Energy Leader

- By Gear Technology India

A decade-long technology partnership enters its next phase as SECO/WARWICK prepares to supply another Vector vacuum furnace for the heat treatment of high-performance gas turbine components.

SECO/WARWICK is set to deliver its tenth Vector vacuum furnace to a major global energy technology company, marking another milestone in a long-standing partnership focused on the manufacture of high-performance gas turbine components.

The latest order reinforces the growing role of advanced vacuum heat treatment in the energy sector, where turbine components must meet increasingly demanding requirements for temperature resistance, dimensional stability, fatigue life and oxidation resistance.

Built for Extreme Conditions

The new Vector furnace is designed to process large components, with a working space of 1,200 × 1,200 × 1,800 mm. Its capabilities are aimed at the stringent heat-treatment requirements of gas turbine blades and flow-path components, which can face operating temperatures exceeding 1,300°C.

Such components require highly controlled processing environments. Clean vacuum conditions, stable temperature control and repeatable process parameters are critical to achieving the metallurgical properties and performance demanded in modern turbine applications.

The furnace will support processing with hydrogen, argon and nitrogen, while argon and nitrogen will also be available for cooling. Its round heating chamber is designed to deliver temperature uniformity of ±5°C, providing consistent treatment across large and complex components.

"The tenth unit delivered to this location is a special source of satisfaction for us. Our long-standing cooperation with this Partner demonstrates that our technologies perform reliably in one of the most demanding industrial sectors," said Maciej Korecki, Vice President of the Vacuum Segment at SECO/WARWICK.

He added that the continued expansion of the customer's technology park with SECO/WARWICK equipment demonstrates the value placed on process repeatability and high-quality heat treatment.

A Partnership Built on Scale

The scale of the customer's operations underlines the significance of the partnership. Its technology fleet includes approximately 50,000 wind turbines and more than 7,000 gas turbines, placing its equipment at the heart of global power-generation infrastructure.

For SECO/WARWICK, the tenth furnace installation represents more than an equipment order. It demonstrates the ability of its vacuum technology to meet the demanding production requirements associated with critical energy-sector components.

"This is our flagship model, designed for highly demanding production processes. High vacuum, temperature stability, and the ability to operate with various process gases are key here," said Kamil Siedlecki, Sales Manager at SECO/WARWICK.

Heat Treatment for the Energy Transition

The order also comes as gas turbines continue to occupy an important position in evolving power-generation systems. Their efficiency and rapid start-up capabilities allow them to complement renewable energy sources and provide flexibility when electricity generation from wind and solar fluctuates.

The new Vector furnace is therefore expected to support the production of the next generation of gas turbine components, combining large-component processing, process flexibility and high-temperature precision.

For SECO/WARWICK, the tenth furnace at the same location is a clear vote of confidence in its vacuum heat-treatment technology—and a reflection of how advanced thermal processing is becoming increasingly critical to the global energy industry.

Beyond the Involute

Tooth forms tuned for EV power density, and a production suite that now spans compound planetary design, linked skiving-honing simulation, and on-machine measurement

- By Mike Fish, Director, Dontyne Gears

An in-house back-to-back rig built for non-involute gears. (All images: Dontyne)

Editor's Note: Dontyne Gears and Dontyne Systems share Booth 237118 (North Building, Level 3) at IMTS 2026. Dontyne Gears reports on its non-involute gear testing for EV and other automotive applications; Dontyne Systems introduces the GPS 5.9 software series. The Gear Production Suite (GPS) features in both.

Non-Involute Gears for EV Applications

Dontyne has invited several automotive companies to present applications to assess the suitability of non-involute technology. There are not always advantages over involute designs, but EV applications seem especially suited, and 15–25 per cent power-density gains are typical. There are also consequential benefits, such as reduced gearbox housing and transport costs. One client's request for an existing design analysis showed that it was also suited to their final drive design despite the deflection during operation. Dontyne has designed and manufactured its own back-to-back rig to test this application. The British Gear Association has funded further testing and a more detailed report on this extend testing is available through them.

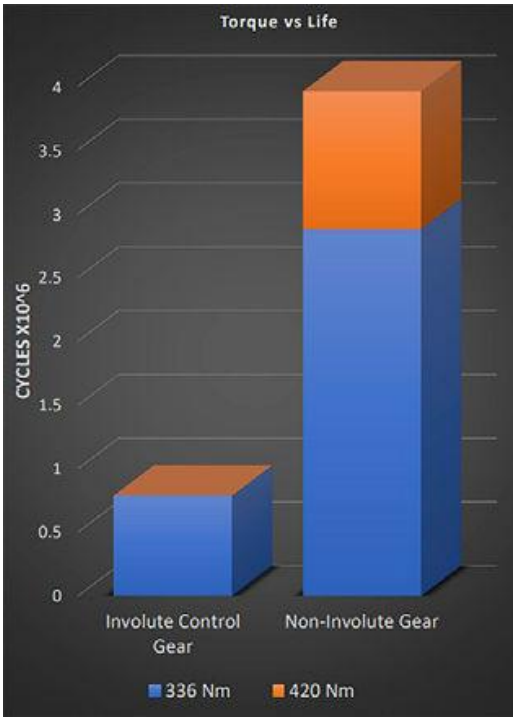

Figure 1—Comparing a typical design of EV using involute (gray) and non-involute (green) and the results of durability testing for a final drive design.

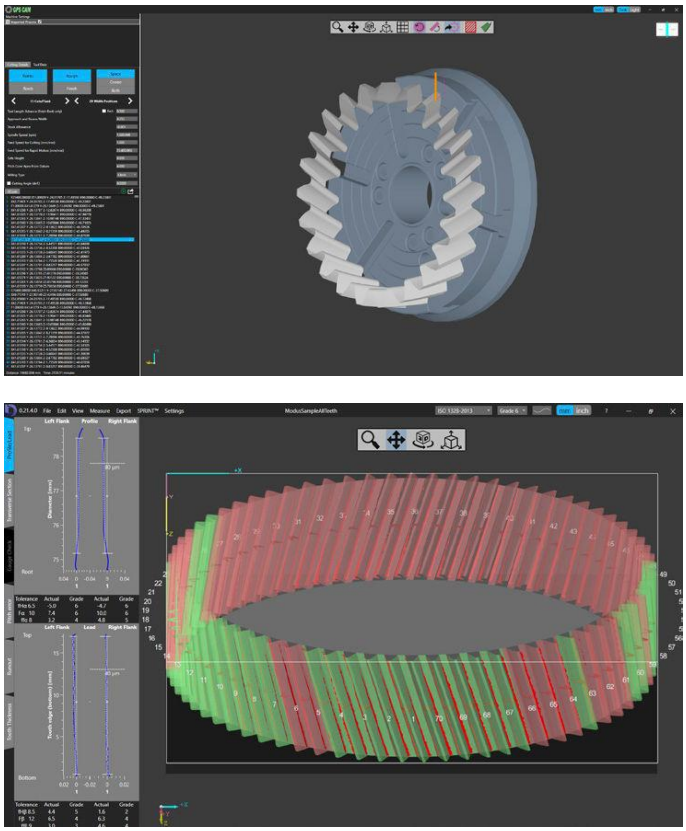

Figure 2—A function has been added to GPS to generate G-Code for gear teeth (top). The DOMMS software (bottom) for evaluating gear measurements on inspection devices includes traditional and modern evaluation displays and can be used with 5-axis CNC Machine production.

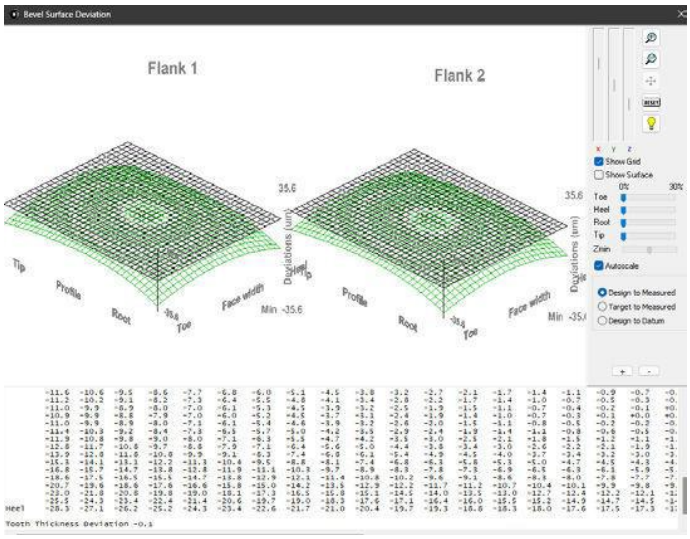

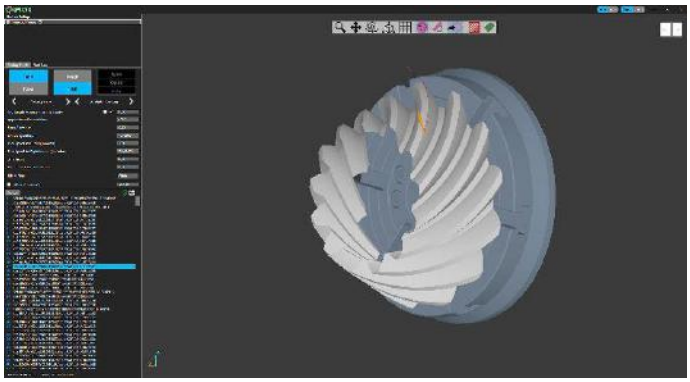

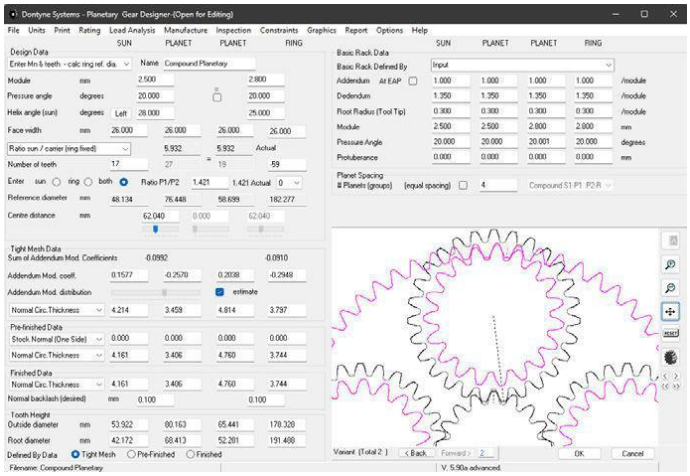

Figure 4—Stepped (or compound) planetary design added to GPS.

The test program has utilised some of the latest developments in Gear Production Suite (GPS), such as GPS CAM, to enable in-house manufacture of test and slave gears on our 5-axis CNC machine, even when hardened. Dontyne Systems has developed a software program, Dontyne On Machine Measuring System (DOMMS), to enable gear evaluation on CMM or other inspection hardware. This also has a link to SPRINT from Renishaw plc for measurement directly on machine tools. As well as the traditional evaluation plots, there are several displays to utilise the possibilities now available in CAD systems.

GPS can use measurement data to correct errors in production, such as deflection, wear, and thermal changes. Measured data can be utilised in GPS to migrate gear production to 5-axis CNC platforms, which enables companies to produce complex gear forms, such as hypoids, in-house. This has been taken up by motorsport and aerospace, and also by Tier 1 to produce test gears without utilising volume production platforms.

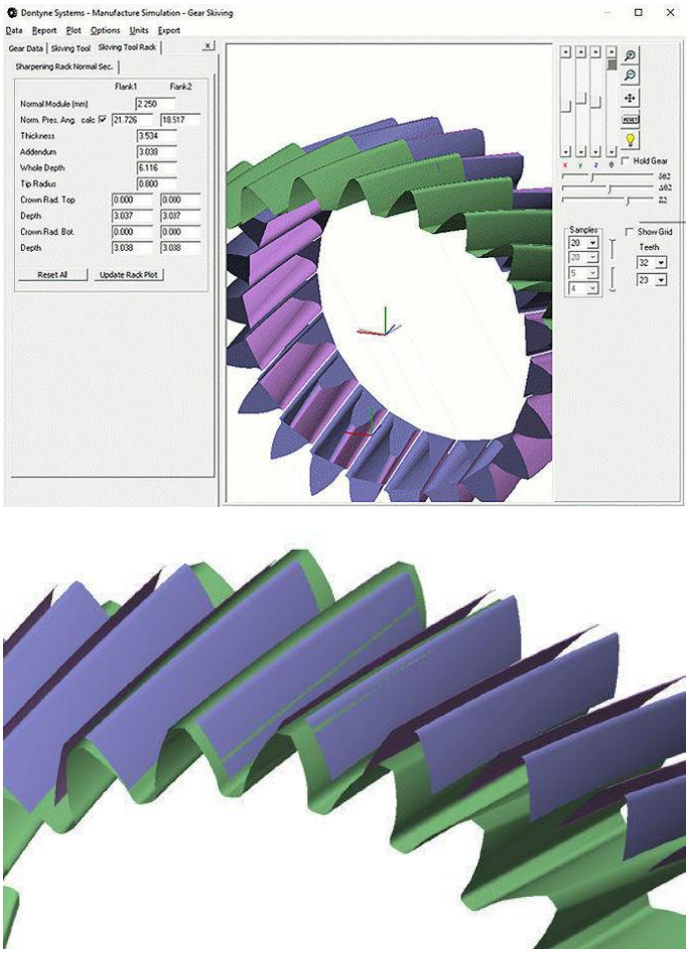

Figure 5—Skiving and honing simulations linked in GPS.

Compound Planetaries and Linked Simulation

Following a large amount of new development over several releases of the GPS 5.8 series in the last two years, this year will see the GPS 5.9 series introduced. The most significant addition is stepped, or compound, planetary design.

The Machine Centre module supports tool design and gear production. The simulations for skiving and honing were improved in GPS 5.8 but are now linked. The results of the skiving simulation, when considered as a pre-finishing process, can now be imported into the honing simulation. The fully finished profile can be defined by the honing simulation for a more accurate picture of the finished gear surface.

dontynegears.com
dontynesystems.com

About the Author

By Mike Fish, Director, Dontyne Gears

Smarter Honing, Better Returns: How Process Intelligence, Integrated Expertise, and Strategic Machine Selection Pay Off

- By Gunter Peersman, Global Distributor & Sales Manager Europe, Sunnen Products Company

In manufacturing, honing rarely commands the same attention as milling, turning, grinding, or robotics. Yet in many precision applications, it may be one of the most consequential processes in the production chain, affecting part performance, throughput, quality, and cost in ways that are often disproportionate to its relatively narrow place in the machine tool world.

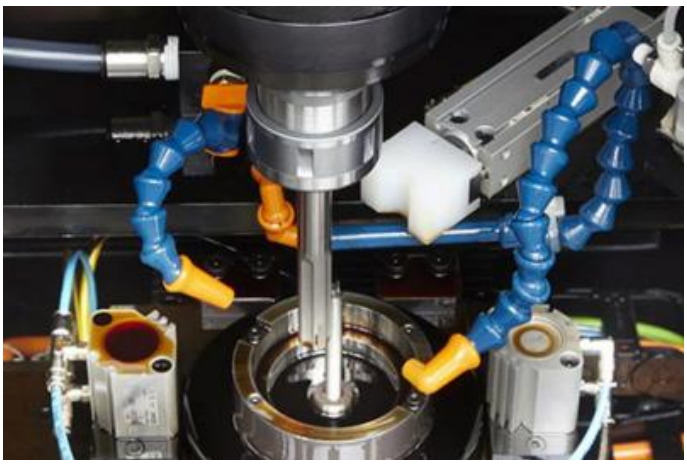

Honing is a precision bore-finishing process that uses abrasive stones to remove small amounts of material while correcting bore geometry, refining surface finish, and achieving ultra-tight tolerances. Because it often occurs near the end of the manufacturing process—when most of a part's value has already been invested—it becomes one of the highest-stakes operations in the production chain, directly affecting final product performance, quality, and yield.

That disconnect exists partly because honing is specialised. It remains a niche process, rarely emphasised in formal engineering education, yet increasingly essential as industries demand tighter tolerances, better bore geometry, and more engineered surface finishes. In many applications, the bore is not just another feature—it is central to how the part performs in the field.

Honing also carries unusual operational weight because it often occurs late in the manufacturing process, after significant value has already been added through material, machining, labour, and scheduling. By that point, inefficiencies are amplified, and mistakes become expensive, making honing far more than a finishing operation.

That reality changes how honing should be viewed. Rather than a straightforward machine purchase, it is better understood as a precision-critical process that deserves strategic planning from the outset, because the decisions made before honing begins often determine how efficiently and consistently it will perform.

Why Honing Is Different

A finishing process with outsized consequences

Unlike drilling or boring, which establish and enlarge a hole, honing is designed to perfect it. The objective is not simply material removal, but the correction and refinement of bore geometry, dimensional accuracy, and surface finish—qualities that directly affect how a part performs in real-world use.

The process uses abrasive stones mounted on an expanding mandrel that rotates and reciprocates inside the bore, or, in single-pass applications, a galvanic diamond-coated single-stroke tool that achieves the finished bore in a single pass. This combined motion removes small amounts of material while improving roundness, straightness, cylindricity, and surface characteristics. In many applications, honing achieves levels of precision and surface control, with a speed that other machining processes cannot match economically.

That precision directly affects downstream performance. In hydraulic cylinders, it affects sealing and leakage. In engine cylinders, it affects lubrication retention and wear. In aerospace and medical applications, it can directly affect reliability, friction, and service life, making the bore a functional performance surface rather than just a machined dimension.

Because honing often occurs late in the manufacturing cycle, those functional gains, or failures, carry disproportionate operational consequences. That makes honing uniquely sensitive to decisions made earlier in production, including stock allowance, tooling strategy, and machine selection.

Why Strategic Honing Decisions Create Value

Strategic honing decisions create value in several

ways: improving labour efficiency, increasing throughput, strengthening process consistency, and supporting future production growth. When these factors are considered together, not just machine price, the financial impact can be significant. Well-designed honing solutions typically achieve payback within three years; when the application volume is substantial, payback within one to two years is not uncommon.

Labor efficiency

Traditional honing depended heavily on operator experience. Skilled operators understood abrasive behaviour, stock-removal patterns, tooling wear, and the subtle adjustments needed to maintain bore geometry throughout the cycle. That expertise remains important, but modern honing systems increasingly embed much of that process knowledge directly into the machine.

Advanced systems now use automatic geometry correction, load sensing, tool overload protection, and stone wear compensation to monitor and adjust the process in real time. Instead of relying on repeated operator intervention, the machine actively manages critical process variables while the cycle continues.

That changes labour economics significantly. When the machine handles more of the process itself, the operator spends less time monitoring the cycle and more time preparing setups, inspecting parts, or supporting adjacent operations. In many production environments, this allows one operator to support multiple machines or stages of production.

The result is not just labour savings, but better labour utilisation. In a manufacturing environment where experienced operators are increasingly difficult to find and retain, reducing dependency on specialised manual intervention can be a major operational advantage.

Throughput and productivity

Automation improves throughput for the same reason it improves labour efficiency: it reduces interruptions.

Automatic geometry correction is one of the most important advances in modern honing because it addresses one of the process's traditional inefficiencies—manual correction during the cycle. As the machine senses load changes and bore conditions, it can make real-time corrections for taper and waviness, while maintaining process continuity. (Roundness correction is achieved by the tool geometry itself rather than by the auto-correction software.)

That improves cycle efficiency in practical ways. Fewer interruptions shorten cycle times, improve machine utilisation, and increase output per shift. In high-volume environments, even small reductions in cycle time can create significant throughput gains over the life of the machine.

Those gains compound.

And over time, they become measurable.

Consistency and quality

In honing, consistency affects far more than final quality. It affects throughput, scheduling, job quoting, and process stability because every manual adjustment introduces variability, and variability creates hidden costs through scrap, rework, inconsistent cycle times, and production delays.

Modern process controls reduce that variability by continuously monitoring tool load, managing stone expansion, and compensating for abrasive wear. These actions create more stable process conditions from part to part and shift to shift, improving both bore quality and operational reliability.

This stability improves more than the finished part. It improves confidence in production planning because cycle times become more predictable, process capability becomes more stable, and delivery schedules become easier to maintain.

Predictability has value.

Capacity and scalability

Strategic honing decisions also affect long-term production capacity. A machine selected only for current demand may become tomorrow's bottleneck, forcing additional shifts, more operators, or earlier capital reinvestment. Those downstream costs often exceed the apparent savings of selecting a smaller machine at the outset.

A more capable machine may require a larger initial investment, but if it absorbs growth, shortens cycle times, or reduces labor dependency, it often creates stronger operational value over its working life. That is one of the most overlooked aspects of strategic machine selection.

Capacity planning is not just about today. It is about ensuring that the process can scale efficiently as business needs change, without creating operational friction or avoidable cost expansion.

Modern Honing Machines Are Smarter

Automation has evolved into process intelligence

State-of-the-art honing systems like Sunnen's SV-3015 embed process intelligence directly into the machine. Features such as patented load-sensing feed control, programmable servo stroking, and automatic bore-straightness correction reduce dependence on operator judgment while delivering faster, more repeatable results and stronger ROI.

The operational gains of strategic honing decisions are increasingly driven by advances in machine technology.

Modern honing systems do far more than automate motion. They actively manage the process itself, embedding process intelligence into the machine and reducing the need for constant operator intervention.

Sunnen has been a leader in that evolution, helping move honing from a largely operator-dependent process to one driven by real-time sensing, adaptive controls, and integrated process intelligence. That shift has improved both the economics and consistency of honing.

Advanced systems now combine automatic geometry correction, integrated gaging, load sensing, and stone wear compensation to monitor bore conditions and make real-time adjustments during the cycle. Instead of stopping to inspect and manually correct, the machine can respond dynamically while cutting, maintaining process continuity and improving repeatability. (sunnen.com)

Closing the loop

One of the most important advances is the integration of in-process gaging and automatic correction. Modern systems can measure bore size and geometry during the honing cycle and automatically adjust, or stop, when specifications are reached.

That creates a closed-loop process, where measurement and correction happen as part of the same cycle rather than as separate manual steps. The result is tighter process control, shorter cycle times, reduced operator dependency, and greater consistency across longer production runs.

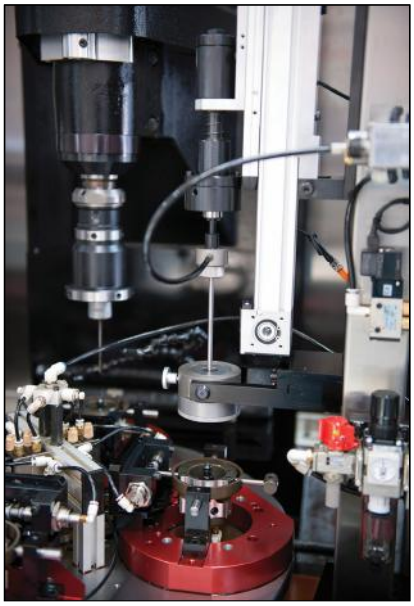

Modern systems can also store job programs, tooling parameters, and machine settings for repeat jobs, reducing setup time and making expertise more repeatable across operators and production runs. That may be one of the most important advances in honing today: the machine is no longer just running the process, but actively helping manage it.

What a Strategic Honing Approach Looks Like

Solution design before machine selection

One of the strongest advantages of working with a specialised honing partner begins before the machine is ever selected. At that stage, the goal is not simply to match a machine to a bore size or tolerance or production volume. It is to define the best process solution based on the facility's production reality.

That means understanding annual volume, labour structure, upstream machining conditions, growth expectations, stock allowance, cycle-time targets, and long-term business requirements. Those variables often reshape the machine decision because the machine a customer initially asks for is not always the machine that creates the best long-term operational result.

A technically capable machine may still be the wrong operational choice if it creates unnecessary labour dependency, reaches capacity too quickly, or lacks automation features that improve consistency and throughput. That is where deep application expertise matters, not simply in honing, but in the customer's application and business realities.

Five Questions to Ask Before Investing in a Honing System

1. Is honing compensating for upstream process variation?

If bores are arriving out of round, misaligned, or with excessive stock variation, the honing process may be doing more corrective work than it should. Improving upstream consistency can dramatically improve honing productivity and reduce tool wear.

2. How much automation and in-process correction does the application require?

Modern honing systems can automatically measure, adjust, and compensate during the cycle. For high-value parts or tight tolerances, these capabilities can reduce operator dependency, improve repeatability, and minimize scrap.

3. What is the real cost of variation at the end of the process?

Because honing is often one of the final machining operations, errors discovered here carry the highest accumulated cost. Evaluate the financial impact of scrap, rework, and bottlenecks—not just machine purchase price.

4. How scalable is the process as production demands change?

A system that performs well at today's volumes may struggle as throughput increases or part mixes change. Consider flexibility, changeover time, tooling adaptability, and the ability to maintain quality under higher production loads.

5. What does success look like beyond cycle time?

The fastest machine is not always the most profitable. Look at total process performance: yield, consistency, consumable life, labor efficiency, machine uptime, and how quickly the investment can produce measurable operational payback.

Designing the full process

A strategic honing solution includes far more than the machine itself. Tooling affects contact stability and expansion behaviour. Abrasives affect stock-removal rates and finish quality. Fluids affect lubrication, cooling, and swarf evacuation. Gaging affects process verification and feedback.

These are not secondary considerations; they are core process variables. Changing one often affects the others, which is why process design works best when these elements are considered together rather than selected separately.

When the machine and the supporting process elements are engineered together, compatibility improves, and process stabilisation happens faster. That shortens development time, reduces trial-and-error, and improves the path to predictable production.

Looking upstream

Some of the most important honing decisions happen before the part ever reaches the honing machine. A common inefficiency occurs when earlier machining operations leave excessive stock as a safety margin, assuming the honing process can simply remove the extra material later.

That often creates downstream inefficiency.

Too much stock entering the honing process increases cycle time, accelerates abrasive wear, increases machine occupancy, and raises labour cost. What appears to reduce risk upstream often expands cost downstream by making the finishing process work harder than necessary.

Honing is highly effective at precision correction and final surface refinement, but it is not the most efficient bulk stock-removal process. When upstream drilling and boring operations are optimised correctly, honing becomes faster, more consistent, and more economical because it can focus on what it does best.

That improves the entire process.

Why guarantees are possible

A supplier that understands the full honing process, not just the machine, but the tooling, abrasives, fluids, incoming bore condition, and production requirements, can define expected outcomes with far greater confidence. That includes cycle time, process capability, tool life, and cost per part.

That level of predictability is difficult to achieve when the process is assembled from disconnected suppliers or developed without deep application knowledge. Honing performance depends on how all of these variables interact, which is why an integrated process model creates a significant advantage.

Just as important, that process knowledge must be combined with a clear understanding of the customer's broader manufacturing reality, including upstream machining operations, stock allowance, labour constraints, production flow, throughput requirements, and long-term growth plans. The best solution is not simply the one that produces the part, but the one that supports the entire manufacturing process as efficiently as possible.

At Sunnen, we take that strategic, integrated approach by working closely with customers to understand not only the bore and the honing requirements, but also the upstream machining process, production challenges, and long-term operational goals before recommending a solution. Critically, that process includes working with the customer to define the expected ROI and to confirm that the right machine is selected for their specific production reality, not simply the machine they initially asked for. To make that ROI concrete, Sunnen uses a structured cost calculation that factors in annual production volume, operator costs, shift structure, and growth potential, turning what can feel like a subjective investment decision into a quantified business case. That allows us to design not just the right machine, but the right process, matching machine capability, automation features, tooling, abrasives, and fluids to the application as a complete system.

That combination of process expertise, upstream process understanding, and application knowledge enables Sunnen to offer something that is still uncommon in machine-tool purchasing: a guarantee of honing time and cost per part. That is not a catalogue promise. It is a commitment built on deep application knowledge, confirmed through a thorough understanding of the customer's specific process, before the machine is ever ordered. Most competitors do not offer this, because making that guarantee requires a level of process confidence that only comes from experience, integration, and genuine investment in the customer's outcome.

Continuous refinement after installation

The process does not stop evolving once production begins. Tooling may be refined, abrasives adjusted, process parameters tightened, and upstream bore conditions improved. These refinements are often incremental, but over time they improve throughput, consistency, and tool life.

Because the supplier remains involved through tooling, abrasives, fluids, and technical process support, the relationship continues to create operational value long after the machine is installed. That continuity matters because honing is not a one-time equipment decision; it is an ongoing production process that benefits from continuous refinement.

That long-term value depends not just on products, but on people. Sunnen's global network spans more than 30 countries, with technical specialists positioned to support customers locally and, critically, in their own language. In honing, a process where operators develop real expertise over time, having access to local technical support that can communicate directly with the production team is a meaningful operational advantage that catalogue suppliers and low-cost competitors rarely match.

The Real Return of Strategic Honing

The value of honing lies not just in the machine, but in the process behind it—how it is designed, integrated, and refined over time. That process begins before machine selection, with a clear understanding of production needs, upstream conditions, and long-term goals.

Modern automation has accelerated those gains through automatic correction, load sensing, wear compensation, and integrated process control. But those technologies create the most value when they are part of a larger process strategy.

That is the real return of strategic honing: better precision, greater predictability, and stronger manufacturing performance.

NORD Strengthens Aluminium Drives for Harsh Wash-Down Applications

- By Gear Technology India

Aluminium drives become "tough" against cleaning chemicals

With NXD tupH® from NORD DRIVESYSTEMS, users of hygiene-sensitive applications in food & beverage and primary packaging industries can benefit from the strengths of aluminium drive solutions. The food-safe surface treatment provides aluminium with properties that make the material comparable to stainless steel in terms of hygiene and corrosion resistance.

With NXD tupH®, NORD DRIVESYSTEMS has developed an effective and food-safe surface protection especially for aluminium housings. The respective gear units, smooth motors and decentralised frequency inverters become particularly corrosion-resistant and withstand extensive cleaning procedures in food processing industries over the long term. NXD means "NORD eXtreme Duty"; tupH combines the English terms "tough" and "pH-value".

Test prove chemical resistance

NXD tupH® combines a special surface treatment with a high-performance sealer. The result is a non-porous surface that can be cleaned hygienically and neither flakes off nor corrodes after numerous cleaning cycles. NXD tupH® has proven its chemical resistance in a long-term test, including the use of Ecolab cleaning agents. NORD drive components with NXD tupH® surfaces are furthermore food-safe in accordance with the requirements of the FDA, EU and Switzerland as well as the MERCOSUR states. They are suitable for food-contact applications in the fields of food & beverage and primary packaging.

Economical alternative to stainless steel drives

With this, NORD provides users with an economical and powerful alternative to stainless steel drives. Drive solutions with aluminium housings are more lightweight and allow for compact design. Since aluminium dissipates heat well, a higher power density and lower surface temperatures can be achieved. With NXD tupH®, aluminium housings now also become chemical-resistant, making the drive solutions durable and increasing the system availability in wash-down applications.

The surface protection from NORD does not require any special design and thus no separate warehousing and installation costs. The manufacturer applies its surface treatment to existing components. This way, it can use the options of its modular products for the drive system design, and supply tailor-made NXD

tupH® drive systems completely from a single source.

NORD-NXD-tupH.jpg: The food-safe NXD tupH® surface protection makes NORD drive systems with aluminium housings more resistant to cleaning chemicals

NXD tupH®-treated complete solutions from a single source

NXD tupH® is available for all NORD aluminium products with a smooth surface, including the integrated DuoDrive gear unit/motor system, the energy-efficient IE5+ smooth motors as well as NORDBLOC.1® helical in-line gear units and NORDBLOC.1® helical bevel gear units. Furthermore, with NORDAC ON PURE, a decentralised frequency inverter with NXD tupH® surface will be available soon. Solution provider NORD can thus supply complete drive systems with food-safe surface treatment from a single source.

OGP Introduces SmartScope E18 High-Capacity Benchtop Video Measurement System

- By Gear Technology India

Compact, fully automatic 3-axis system delivers expanded XY measuring range for manufacturers with limited floor space

Optical Gaging Products (OGP®), a leading manufacturer of precision optical and multisensor metrology systems, has introduced SmartScope® E18, a high-capacity benchtop video measurement system that delivers fully automatic 3-axis measurement performance in a compact footprint.

SmartScope E18 combines a generous XY measuring range with a space-efficient benchtop design for manufacturers that need automated dimensional inspection without dedicating significant floor space to a measurement system. Its compact design makes it well suited for production environments, quality laboratories, and other applications where available space is at a premium.

At the heart of the SmartScope E18 is OGP's IntelliCentric™-E fixed-lens optical system, which provides high-resolution imaging for precise video measurement. VIRTUAL ZOOM™ technology further enhances image detail and measurement capability, helping operators efficiently inspect a wide range of part features.

"With its 300 x 300 mm stage in a benchtop format, SmartScope E18 brings the capabilities manufacturers need for automated video measurement into a compact and cost-effective platform," said Shreyansh B Hippargi, Managing Director, QVI India. "By maximising the available XY measuring range while minimising the system footprint, the E18 gives manufacturers a practical way to increase measurement automation without compromising valuable production space."

Advanced Illumination Comes Standard

SmartScope E18 includes a comprehensive LED lighting system as standard equipment. Coaxial, substage profile, and SmartRing™ illumination provide flexible lighting options for highlighting different part features and optimising image contrast during measurement.

Built for Measurement Stability

A new, compact fixed-bridge design combined with a heavy-duty base provides a rigid, stable structure engineered to support accurate, repeatable measurements. The system's orthogonal construction helps maintain measurement stability while keeping the overall footprint compact.

Multisensor Capability

For applications requiring more than video measurement, SmartScope E18 can be equipped with an optional touch probe, extending the system's capabilities to provide multisensor measurement coverage. This allows manufacturers to combine optical and tactile measurement within a single automated platform.

With its combination of high XY capacity, automated 3-axis video measurement, advanced LED illumination, rigid construction and optional multisensor capability, SmartScope E18 provides manufacturers with a versatile inspection solution when measurement performance and floor space are equally important.

Metrology Software Capability

As with all E-Series systems, the SmartScope E18 comes standard with easy-to-use Measure-X software. For applications requiring full 3D capability and other

advanced software functionality, ZONE3 software is now also available on SmartScope E-Series systems.

SmartScope E18 is available through OGP Authorised Representatives worldwide. To find your local OGP Representative, visit ogp.com/find-a-rep

www.ogp.com

About Optical Gaging Products

Optical Gaging Products (OGP®), a division of Quality Vision International (QVI®), is a world-leading manufacturer of precision optical and multisensor metrology systems for industrial quality control. Since introducing SmartScope® in 1992, OGP has developed innovative measurement solutions that combine optical imaging, video, laser and tactile sensing technologies to help manufacturers improve product quality, increase productivity and meet demanding measurement requirements. OGP systems are designed and manufactured in Rochester, New York, USA.

For more information about SmartScope E18 and OGP's complete line of metrology solutions, visit www.ogp.com

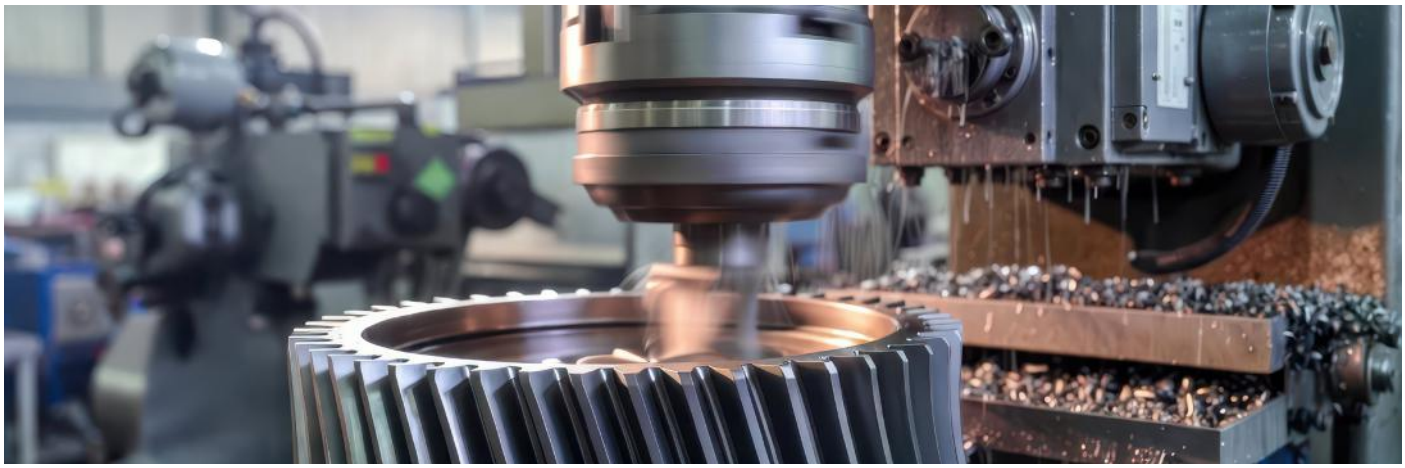

Why Ceramic Machining Doesn't Follow Carbide Rules

- By NTK Cutting Tools

Why many ceramic machining trials fail before they even begin

For most machinists, there is one rule that has been reinforced throughout their entire career:

When in doubt, slow down.

A cutting edge wears too quickly? Reduce the speed.

The process becomes unstable? Reduce the speed.

The insert starts showing signs of failure? Reduce the speed.

For carbide machining, this instinct is often correct.

Then comes the first ceramic insert trial.

An application engineer visits a customer to introduce ceramic tooling for a roughing operation.

The recommendation is straightforward:

"Increase the cutting speed from 250 m/min to 900 m/min."

The operator looks at the machine.

Then at the insert.

Then back at the application engineer.

"You want me to run almost four times faster?"

The recommendation feels wrong.

Everything learned from years of machining with carbide suggests that higher speed means more heat, more wear, and greater risk.

So the operator does what seems sensible.

Instead of 900 m/min, the machine starts at 400 m/min.

The result?

Poor tool life.

Unexpected wear.

Disappointing productivity.

And the conclusion is often:

"Ceramics don't work for us."

The reality is that the ceramic insert was never given the opportunity to perform as intended.

Because successful ceramic machining requires a different mindset.

Why Ceramics Play by Different Rules

The explanation lies in how heat affects both the workpiece and the cutting tool.

In conventional carbide machining, heat is usually considered the enemy. Higher temperatures accelerate wear, shorten tool life, and reduce process stability.

Ceramic machining works differently.

In high-speed machining of heat-resistant superalloys and cast irons, the relationship between heat and cutting performance can be very different from what most machinists are accustomed to.

In nickel-based alloys, the material maintains extremely high strength at room temperature. As temperature rises, however, the material begins to soften. Around 800°C, its resistance to deformation decreases significantly, making it easier to cut.

At the same time, ceramic cutting materials retain their hardness and wear resistance at temperatures that would rapidly degrade conventional carbide grades.

This creates an unusual advantage: as the cutting zone becomes hotter, the material becomes easier to machine

while the ceramic cutting edge retains its strength.

The result is lower cutting forces, higher material removal rates, and greater productivity.

This is why recommended cutting speeds for ceramic tools often appear surprisingly high. The objective is not simply to remove material faster. The objective is to generate the thermal conditions that allow the process to work efficiently.

The Cost of Playing It Safe

Understanding the theory is one thing.

Applying it on the shop floor is another.

When ceramic tools are introduced into production, many users instinctively reduce the recommended cutting speed during the first trial.

It feels like a reasonable precaution.

Unfortunately, it often produces the opposite effect.

At lower cutting speeds, the temperature in the cutting zone may never reach the level required to take advantage of thermal softening. The material remains difficult to machine, cutting forces increase, and productivity suffers.

In one rough milling application on Inconel 718, increasing cutting speed from approximately 400 m/min to over 1,000 m/min reduced machining time significantly while also producing lower wear than the slower cutting conditions.

For users transitioning from carbide to ceramics, this is often the moment where expectations and reality finally align.

It's Not Just About Speed

None of this means that ceramic machining is simply a matter of turning up the spindle and hoping for the best.

Like any advanced cutting tool technology, ceramics require the right application conditions.

Rigidity remains critical. Stable workholding, secure toolholding, minimal overhang, and a vibration-free setup all contribute to successful performance. In milling applications, smooth tool paths and reduced interruptions help minimise impact loads on the cutting edge. In turning operations, stable engagement and consistent cutting conditions allow ceramic grades to perform at their full potential.

Another common question concerns coolant. In milling applications, ceramic machining is typically performed dry. The high temperatures generated during cutting are part of the process, and intermittent coolant application can create thermal shock that may damage the cutting edge. In turning operations, however, coolant can often be applied successfully because the cutting edge remains continuously engaged, avoiding the repeated heating and cooling cycles commonly found in milling.

The key difference is that, unlike carbide, cutting speed is rarely the first parameter that should be reduced when challenges arise.

More often than not, the solution lies in improving process stability rather than slowing the process down.

Rethinking What We Know About Speed

The greatest challenge in ceramic machining is often not the machine, the insert, or even the material being machined.

It is changing habits built over years of successful carbide machining.

One of the most common misconceptions is to view ceramic inserts as simply another grade of carbide.

They are not.
Ceramics are a different cutting technology, designed to operate according to different principles and within a completely different performance window.

With decades of experience in ceramic development, NTK Cutting Tools offers a comprehensive portfolio of solutions for both heat-resistant superalloys and cast iron machining. From SiAlON grades for high-speed HRSA roughing to ceramic solutions optimised for grey and ductile cast irons, these technologies help manufacturers achieve productivity levels that conventional carbide tooling often cannot reach.

The next time a ceramic cutting speed seems surprisingly aggressive, resist the temptation to treat it like carbide.

Ceramics Milling

Ceramics Milling brazed

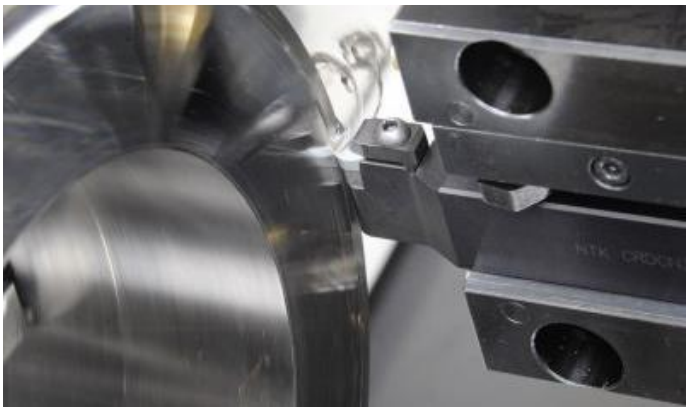

Ceramics Turning 1

Ceramics Turning 2

The recommendation is not high simply because the insert can survive it.

It's high because that's where the technology begins to work.

About NTK Cutting Tools

NTK Cutting Tools, a member of the IMC Group, is a global supplier of advanced cutting tool solutions for the metalworking industry. The company is recognised for its expertise in ceramic tooling for high-temperature machining and as a specialist in miniature and Swiss-type machining applications, where precision and process stability are critical. Supported by a broad range of cutting tool solutions, NTK helps manufacturers increase productivity, ensure process stability, and improve resource efficiency across demanding industries including aerospace, automotive, medical, electronics, and general engineering.

For more information, visit: https://ntkcuttingtools.com

gear TECHNOLOGY INDIA

JOIN US TODAY