 © Copyright Gatemaster 2026

SUPERHINGE HEAVY DUTY GATE HINGE WITH CORNER LUGS



Weld-on **20-year warranty***

Tested up to 500,000 openings

Suitable for metal gate frames.

- Low-friction design makes it ideal for use with automated gates.
- Features adjustable bolt for accurate on-site fitting.
- Offset / Incline version available.

MADE IN BRITAIN

Maximum gate mass depends on the G dimension, a smaller G dimension generally supports more weight. Refer to the table for the recommended maximum gate mass. These figures are based on the distance between the hinges and the width of the gate being equal.

Product code	G= 0-50mm	G= 50-100mm	G= 100-150mm
SH16C	150kg	100kg	x
SH20C	300kg	225kg	x
SH25C	450kg	350kg	x
SH30C	850kg	550kg	425kg

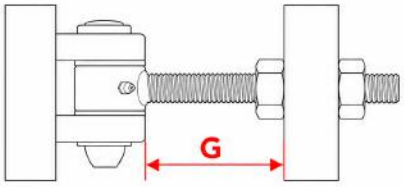

Smaller G
(Higher allowable weight)

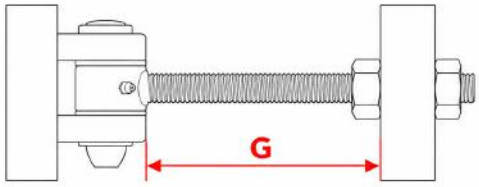

Larger G
(Lower allowable weight)

IMPORTANT: These load values are guidelines only and assume correct installation and normal use. For gates near the stated limits or where suitability is uncertain, consult a qualified structural engineer before installation.

**The warranty covers defects in materials and manufacture and does not cover installation workmanship, including welding, or damage resulting from incorrect installation.*

INSTALLATION INSTRUCTIONS

1. With the hinge still assembled, weld the 2 lugs to the corner of the gate post, then unscrew the break-off nut and disassemble the hinge
2. Drill a hole through the gate frame to suit the thread size
3. Once the gate has been galvanized or painted, reassemble the hinge without the sacrificial 1.8mm washer. Tighten the break-off nut until the hex breaks off.
4. Hang the gate on the threaded portion with a nut on each side and adjust as necessary.

MAINTENANCE: Lubricate during fitting and once every 6 months to ensure maximum product life.

PRODUCT DETAILS

Product code	Thread size	A	B	C	D	E	F	G
SH16C	M16	35mm	26mm	44mm	59mm	50mm	57mm	100mm
SH20C	M20	44mm	30mm	52mm	74mm	15mm	62mm	125mm
SH25C	M24	57mm	30mm	58.5mm	87mm	20mm	78mm	150mm
SH30C	M30	64mm	35mm	67mm	99mm	25mm	92mm	200mm

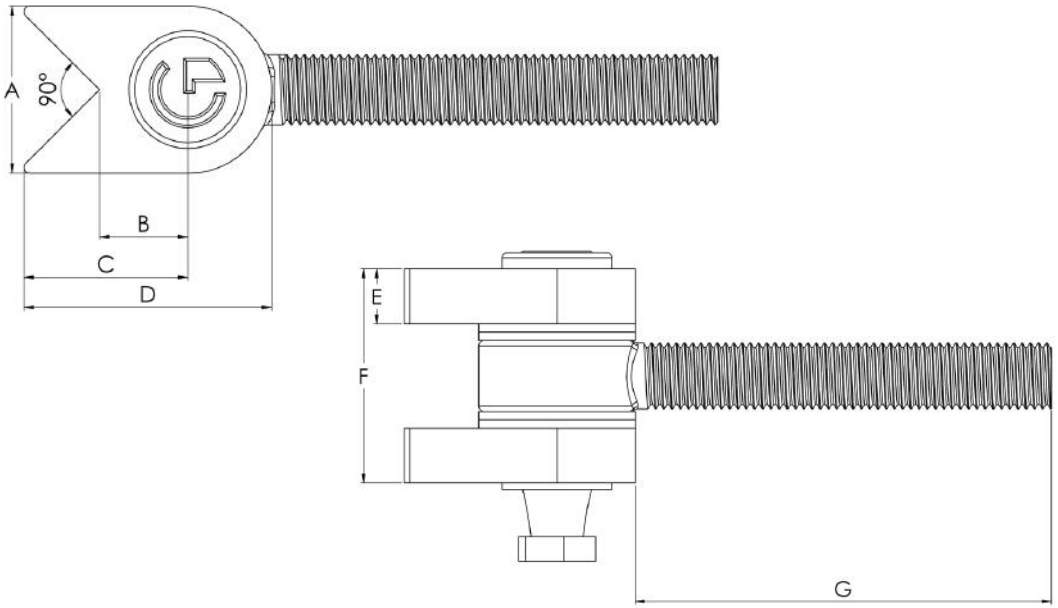

OTHER VARIATIONS OF THE SUPERHINGE



Superhinge 180° Version Opening | 2-Way Adjustable (SH-180-2W)

- Tested for over 500,000 gate openings without any sign of wear, equating to approximately 50 years of daily use at 25 gate openings per day.
- Capable of supporting gates weighing up to 600kg.
- Ideal for both automated and manual gates.
- Available in multiple sizes with adjustable installation options.



Superhinge 180° Version Opening | 3-Way Adjustable (SH-180-3W)

- Features adjustable bolt for accurate on-site fitting.
- Tested for over 500,000 gate openings without any sign of wear, equating to approximately 50 years of daily use at 25 gate openings per day.
- Ideal for both automated and manual gates.
- Available in multiple sizes with adjustable installation options.



Superhinge Standard Version (SH)

- Tested for over 500,000 gate openings without any sign of wear, equating to approximately 50 years of daily use at 25 gate openings per day.
- Capable of supporting gates weighing up to 900kg.
- Ideal for both automated and manual gates.
- Available in multiple sizes with adjustable installation options.

HELP & SUPPORT

Need further assistance? Our customer support team can help with order queries, product identification, spare parts, warranty information and general after-care.

UK: +44 1243 558580 US: +1 214 872 9687

www.gatemasterlocks.com support@gatemasterlocks.com

COMPATIBLE PRODUCTS

© Copyright Gatemaster 2026

To help improve gate security and overall performance, the Inline Superhinge can be paired with a range of Gatemaster products. These options are designed to work alongside your Superhinge, helping create a stronger, safer and more complete gate installation.



Gate Safety Restrainer (GRS)

- Made from stainless steel.
- Easy to fit.
- Fits on any box section gate and can easily be retro-fitted.
- The gate restrainer makes a nice finish to any gate of any colour.
- Depending on the size can withstand 500kg in weight.



Gate Closing Strut (GSB)

- Ideal for closing gates up to 80kg.
- Easy to fit as comes with adjustable brackets meaning there is no need to compress the strut when fitting to a gate.
- Force can be adjusted using the adjustable brackets provided.
- Comes as either a weld-on or screw fix version.



Hydraulic Gate Closer (APS)

- Provides safe, reliable gate closing using a proven hydraulic mechanism, ideal for schools, playgrounds, and other applications where adjustable closing speed is essential.
- Designed to support gates up to 150kg.
- Available with either a standard top hinge or an integrated 90° stop, offering a durable, unobtrusive, and maintenance-free solution.
- Requires no power.