HANDLES INC.



PLAIN T-BAR PULL HANDLE (320MM)

TECHNICAL DATA SHEET



PLAIN

T-BAR PULL HANDLE (320MM)

Overview:
Plain T-bar pull handle in satin brass or black, sold as a pair.

Base Material:
Stainless Steel

Dimensions:
Length: 380mm / CTC: 320mm
Projection: 53mm / Bar Ø: 18mm

Finish:

SKU: CH209, CH210

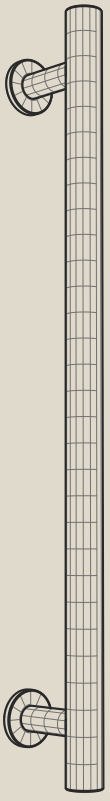

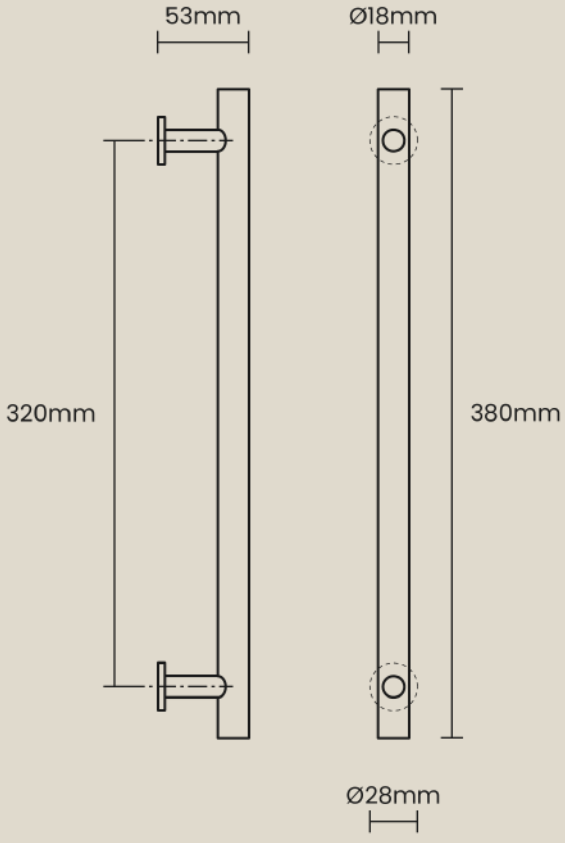

DIMENSIONS