FOLLOW THE RED LINE

EN

STATIONARY WORKHOLDING

A6

GENERAL CATALOGUE

www.omlspa.it

STATIONARY WORKHOLDING

A6

General Catalogue

The ultimate Stationary Workholding

For over thirty years OML has been involved in the design and manufacturing of clamping equipment for mechanical processing on machine tools and boasts the development of a wide range of advanced solutions, both standard and customized.

The high innovative content, the great functionality of its solutions and the specialized know-how, also acquired through the collaboration with some machine tool manufacturers, allow OML, which became part of the SMW Autoblok Group since 1998, to operate in application sectors characterized by high added value mechanical machining, where extreme precision and quick set-up times are required. In October 2021, the company moved to a new headquarters, located in Trivolzio, in the province of Pavia.
The new headquarters covers a total property of approximately 18,000 square meters; of the 8,800 covered square meters, 1,000 are used as offices (executive offices, meeting rooms, design office, sales office, training room), while the remaining are occupied by showroom, workshop, assembly department, metrology room and warehouse.

The current production capacity of OML makes use of an advanced machine tool park, which is constantly engaged in saturation over two working shifts.
Two new machining centers served by a sophisticated palletizing system with 62 pallets, 800x800 mm in size for a payload of over 3,000 kg; the system is designed for the enslavement of two other work centers. The ideal solution to give production greater autonomy at night. Training is an indispensable way of communicating the technologies and technical solutions that are distinctive of OML products compared to other market proposals.

A "training room" was created close to the showroom, precisely to create that immediate correlation between the theoretical part and the practical part.

In the showroom, where all OML products are exhibited, the customer can see and try those products on which an investment is being evaluated.

The technical office and Research & Development activities are aimed at defining innovative products that allow us to offer the market technologically advanced, patented and high performance solutions. ■

Storytelling

Storytelling

Storytelling

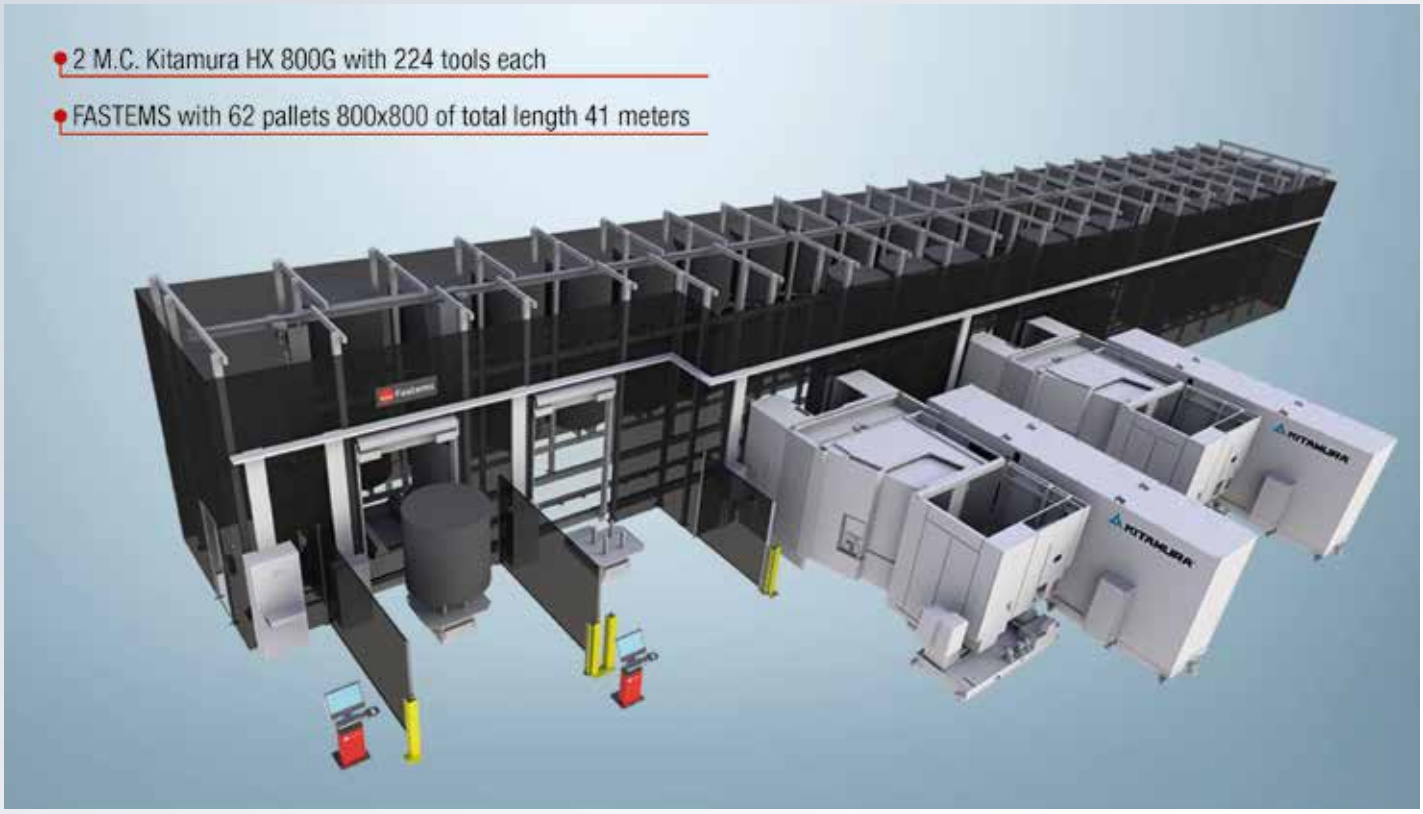

OML and SMW-AUTOBLOK Locations

Argentina	○
Australia	○
Belgium	○
Belarus	○
Brazil	○
Canada	○
China	●
Korea	●
Denmark	○
Finland	○
France	●●
Germany	●
Japan	●
Great Britain	●●
Greece	○
Iceland	○
India	●
Israel	○
Italy	●●●●●
Mexico	●
Norway	○
New Zeland	○
Holland	○
Poland	●
Portugal	○
Czech Republic	●

Romania	○
Russia	●
Slovenia	○
South Africa	○
Spain	●
Sweden	●
Swiss	○
Taiwan	●
Turkey	●
Ukraine	○
U.S.A.	●○

Brands - SMW AUTOBLOK Group production sites

Production sites
Branches
Dealers

Zero Point Innovation

APS, acronym for Automatic Positioning System, identifies a family of products belonging to the Zero Point systems made by OML.

In collaboration with the Autoblok designers, a product has been developed that presents elements of uniqueness, which bases the grip of the pin on 3 jaws arranged at 120°, similar to the concept of the self-centering chuck. The system uses pneumatics only to unlock, while the clamping is mechanical, by means of springs, with repeatability of less than 5 microns.
A flexible product that allows positioning and clamping in a single operation.
Integrated in the APS modules, Premium and Premium Light versions, there is the "Turbo" function which enhances the rigidity of the system itself. In fact, through this function, the compressed air is introduced into the system and helps the compression of the springs, increasing the clamping force which goes from 7.5 N, guaranteed by the springs themselves, up to 45 kN.
The range has some uniqueness that clearly distinguish OML products from those of the competition.
A fundamental part of APS products are the supports, without which the modules could not fully express their potential.
By support we mean the plates, cubes and various special equipment in which these modules are installed. They are products that require a first phase of accurate design and, subsequently, high quality milling and grinding operations carried out by highly specialized labor. Another distinctive element of this product is the use of pneumatics. To be able to transfer the compressed air to the modules, the plate or the cubes need a channel that brings the compressed air at 6 bar to the modules.

Most of the competition uses plastic pipes. On the contrary, OML uses the concept of deep drilling using machinery suitable for making it.
This variable, which is hardly known at the moment, becomes fundamental over time as pipes by their nature have a time limit, while deep drilling is forever. ■

WATCH THE VIDEO

Application examples

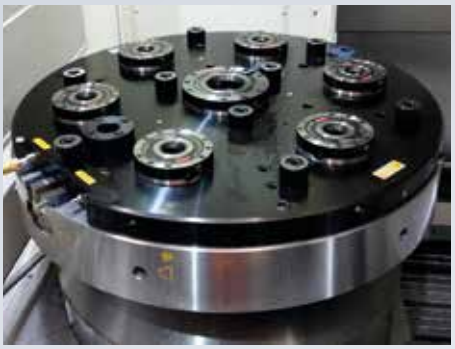

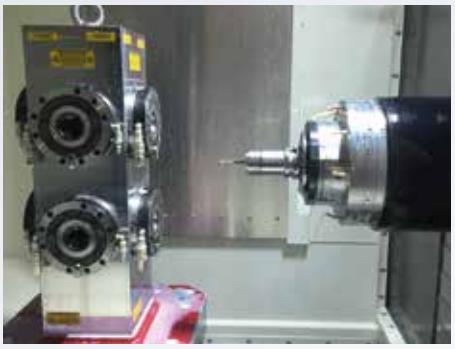
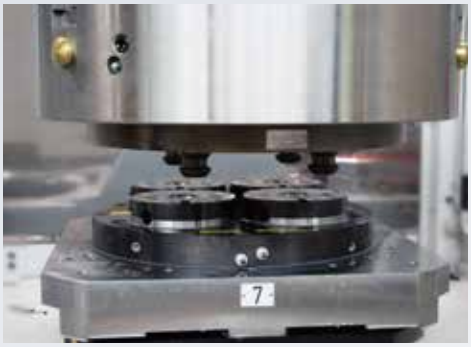

PLUS 5

Mechanical Zero Point system

The symbol below represents the vectorial force transmission system that acts by binding the pins uniformly and in all directions.

PLUS 5 benefits

- Locking and unlocking system of the pins with a rotation of only 180 degrees
- Does not require a torque wrench. The limit switch determines locking / unlocking
- Repeatability < 0.005mm
- Pull down force 7 kN for Plus 5 52 and 8 kN for Plus 5 96
- Holding force 40 kN for Plus 5 52 and 80 kN for Plus 5 96

The mechanism designed for locking the pins consists of a cam which is operated by an eccentric pin.
The system guarantees high performance in terms of precision and clamping force.
This is due in particular to the fact that the cam locks the 4 pins outwards at the same time.

WATCH THE VIDEO

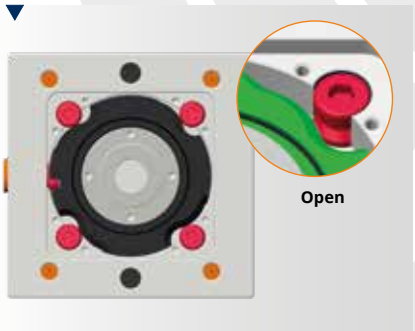

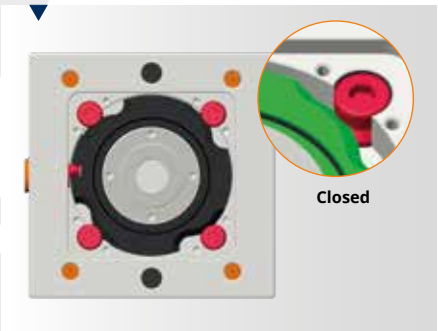

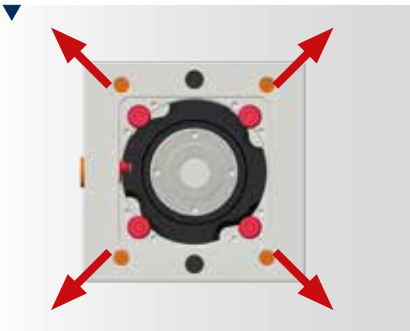

Application examples

IMG
Innovative Solution

IMG is the acronym that identifies a special line of vices that OML offers in the self-centering version, convertible into double clamping and fixed.

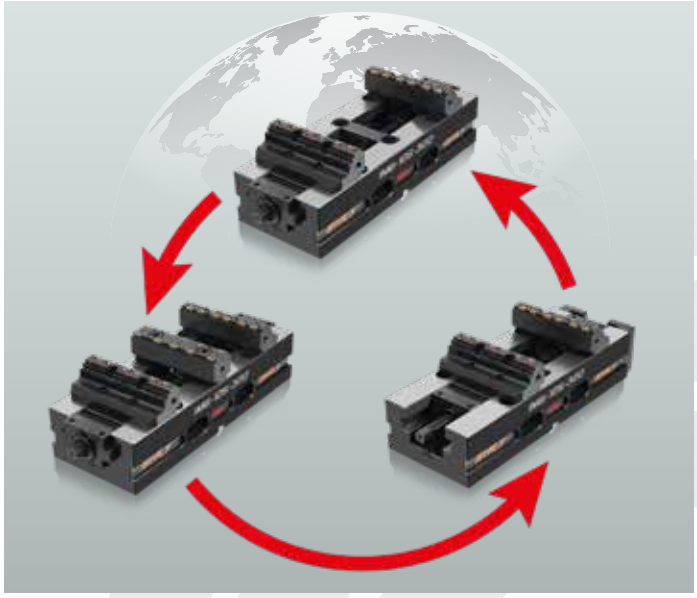

The IMG series guarantees a wide clamping range, as well as maximum flexibility and the possibility of both external and internal clamping.
They are equipped with reversible SinterGrip jaws, that ensure minimal clamping depth and no pre-machining. The mechanical clamping guarantees complete protection, also thanks to the use of a patented telescopic system.
They are equipped with an interface for Zero Point APS / WPS and Lang 96 mm clamping systems and are equipped with mounting holes as standard. In the IMG vices the operating screw is completely protected with a patented telescopic system.

This avoids the need to remove the jaws to find the optimal clamping position. Normally the vices with protected screw use the operating slide way as a protection tool. This solution requires continuous movement of the jaws in the appropriate seat, as the stroke of the same is reduced to a few millimeters.
On the contrary, the IMG vices, while keeping the screw completely protected, allow a continuous opening and closing movement of the vice.
Ideal in the case of automation and the use of palletizing systems, the IMG series vices are simple to install: assembly takes place directly on the machine table through the use of clamps (available as an option).

There is a wide opening for optimized chip exit; maximum precision and repeatability are ensured by the treated and ground guides.
With IMG vices it is possible to reach a maximum clamping force of 50 kN.
To increase its strength is the combination with the patented SinterGrip system, expressly designed to clamps a piece in the smallest possible space (ie 3.5 mm of grip).

Another aspect that identifies IMG vices is their modularity: they can be easily transformed into fixed or double clamping vices. Double clamping vices have a fully compensating mechanism; this means that it is possible to block two pieces of different sizes. ■

WATCH THE VIDEO

Application examples

Stability, Precision and Savings

The SinterGrips are inserts in solid carbide type ISO P30: P35 and coated with the PVD method, that allow you to clamp a piece with only 3.5 mm of grip.

In the mechanical milling and machining centers, needs have come out in recent years, such as being able to machine the piece in a single solution (especially on 5-axis machines), having the guarantee of a secure clamping to increase the quality of the processing and avoid deformation of the piece during processing. Furthermore, it has become essential to be able to exploit the performance of the machine tool and tools with higher cutting speed, higher feed rate, greater volume of chip removed and less time to work the piece.

OML has been able to listen to the needs of users, and, starting from these requests, has created SinterGrip, a solution that avoids having to perform the preliminary drilling of the piece, does not require the creation of a special clamping vice and does not force the operator to perform a pre-machining of the piece (such as dovetail).

SinterGrip allows you to clamp a piece with only 3.5 mm of grip and allows you to obtain exceptional clamping stability with total absence of vibrations.
The insert, with its special truncated pyramid shape and the sharpening of the teeth, engraves the material to be machined and creates couplings with absolute absence of play, discharging forces and vibrations, making the workpiece a sole body with the vice and / or the clamping equipment.
SinterGrip is offered with 3 types of inserts (for steel, for aluminum and for HRC 50-54) which, despite having the same common characteristics, differ in their type of sharpening of the teeth and of the coating.
SinterGrip can be used on any vice or clamping equipment already existing on the market, with the simple addition of a pair of jaws to be applied to the clamps and / or directly only the inserts in the case of special equipment and self-centering chucks. ■

WATCH THE VIDEO

Application examples

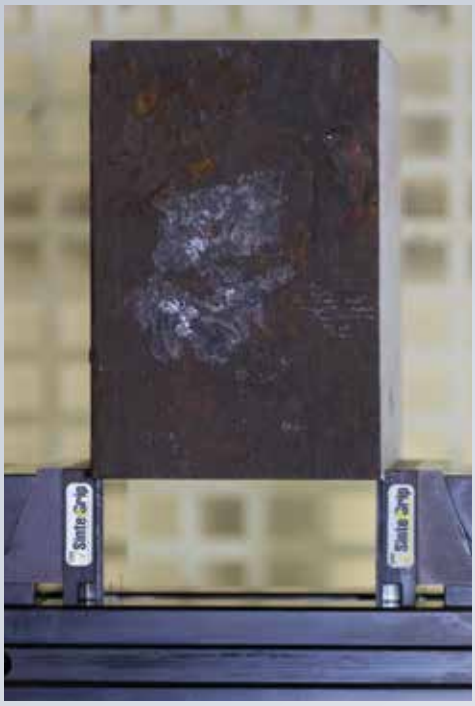

A Solution for the Mold Maker

The continuous research in technological innovation has led to the creation of the TDM (Torque Die & Mold) clamping system, which is an innovative and patented clamping system designed for the mold construction sector.

The TDM system is equipped with self-centering self-compensating clamping jaws and has a large contact surface of the jaws, equal to 210 degrees.
Only 3.5 rotations for opening / locking; repeatability <0.005 mm; clamping force up to 18 kN at 20 Nm of torque; holding force up to 100 kN.
The construction of molds is a sector that has particular locking requirements, which are condensed on the fact that the clamping system must be modular, that the mold should be clamped using standard screws M10, 12, 16 class 12.9, all accompanied by a clamping mechanism that must be extremely precise, but above all reliable, having to support the machining of molds even from 3 to 4 tons.
With the TDM system, starting from a grid plate 50x50 mm or 100x100 mm pitch strictly produced in material 1.2312 and ground, the mold maker manages the TDM clamping element, adapting it to any shape or size of the mold. The position of the modules in the grid is established in advance, based on the mold to be machined, consequently the operator knows exactly where to place the modules and the seat of the clamping pins before starting to work.
The operator places a centering bushing into the grid of the plate, fixes the modules with a common M16 12.9 screw and once the clamping pins are fixed to the mold, the pin is blocked by the TDM system with only 3.5 rotations of the screw.
With TDM, therefore, the set-up times are optimized and the risk of collisions is avoided. The pieces can be machined on the 5 faces and thanks to its patented locking mechanism the piece is machined in total absence of vibrations.
TDM is offered in two models: TDM 88 and TDM 48.
In order to offer the market the widest range of technologically advanced solutions, and thanks to the acquisition of MAG Autoblok Tecnomagnete by the SMW Autoblok Group, a hybrid system has been conceived that uses TDM in combination with a magnetic table. ■

WATCH THE VIDEO

Application examples

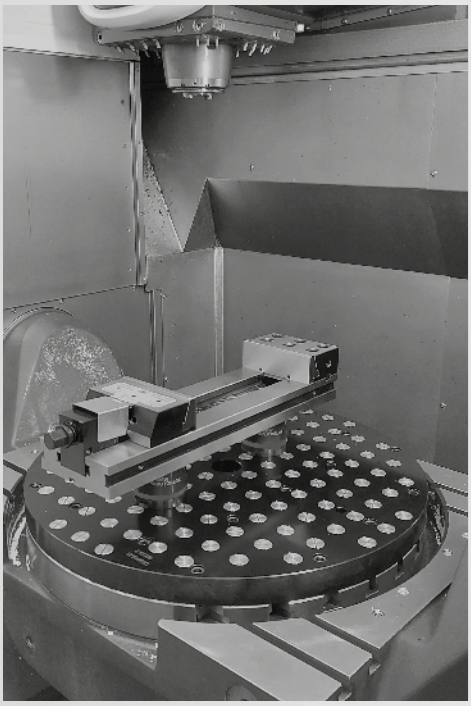

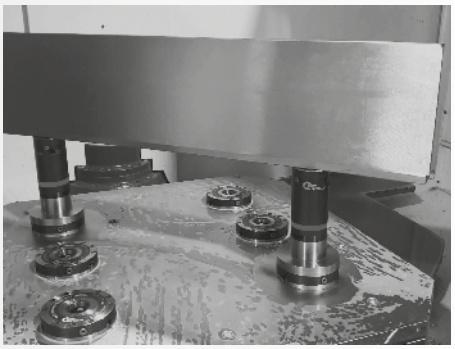
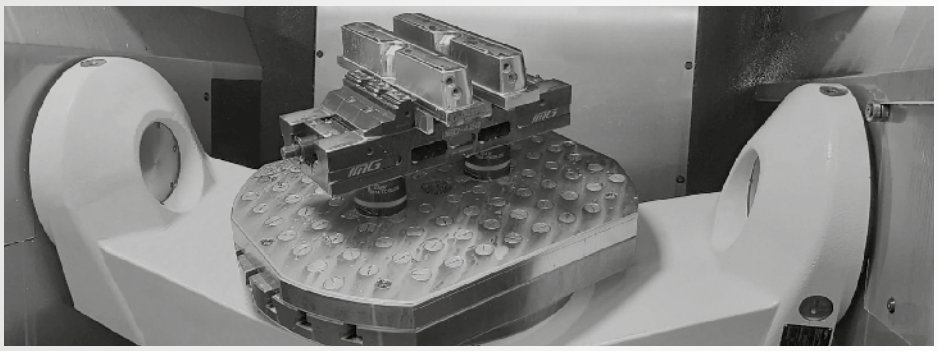

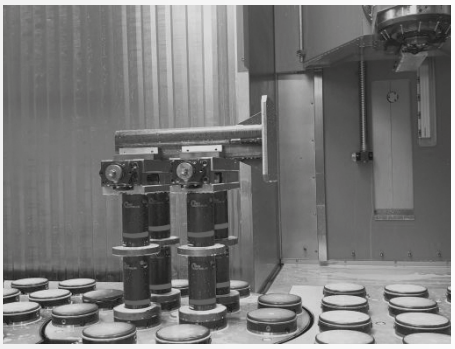
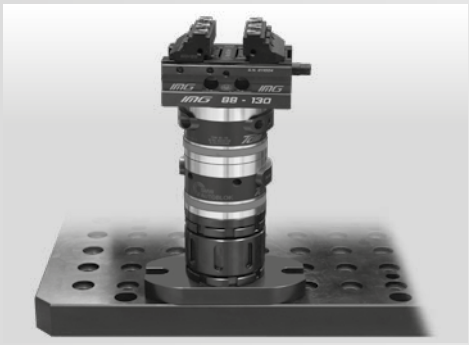

Index

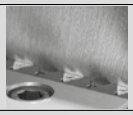	**SINTERGRIP** The New Choice	**S**
	APS Zero Point Clamping System	**0**
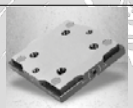	**PLUS 5** Mechanical Zero Point system	**0.1**
	TDM Torque Die & Mold	**0.2**
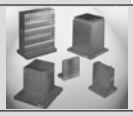	**Tombstone, Crankwebs, Subplates**	**1**
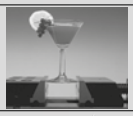	**TC** Modular clamping equipment	**2**
	MC Modular clamping equipment	**3.1**
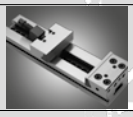	**LC** Modular clamping equipment	**3.2**
	CLAK SYSTEM Modular parallels and soft jaws quick change	**4**
	IMG Self-centering, Double clamping and Fixed Vice	**5.1**
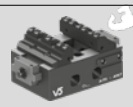	**V5** Self-centering vice for 5 axis machine tools	**5.2**
	E5 Self-centering vice for 5-axis machines	**5.3**
	GENIUS High precision vice for 5 axis machine tools	**5.4**
	VCA 5-Axis machine tools	**5.5**

Index

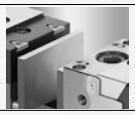

CIVI SINTERGRIP
Multiple clamping systems 6.1

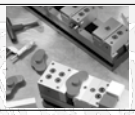

CIVI 2000
Multiple Clamping System 6.2

TETRABLOK
Multiple Clamping System 6.3

CAM SYSTEM
Eccentric self-locking clamping device 7

FORM HOLDING CLAMPS
Clamping equipments for irregular-shaped workpieces 8

VARI CLAMP
Clamping equipment 9.1

VP-N
NC Clamping Vice 9.2

TWIN VISE 10

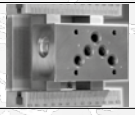

SPECIAL JAWS 11

STATIC CHUCKS
Manual, pneumatic, hydraulic 12

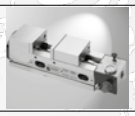

SPEEDY VISE - TC HYDRO
Pneumatic and pneumohydraulic clamping equipments 13

FAST CLAMPS 14

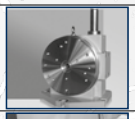

TOUCHDEX
Automatic mechanical indexing tables 15

4-AXIS WORKHOLDING
Clamping systems for rotary tables 16

OPEN

SINTERGRIP

The New Choice

The advantages of the system
SinterGrip: the new choice
Page S.2

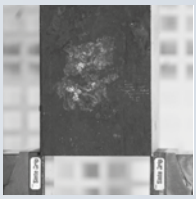

Jaws
All in one, Standard, Starter Kit
Pag. S.12

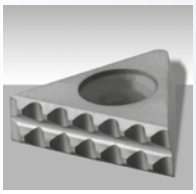

Technical features
Pag. S.4

Products
All in one, Standard, Starter Kit
Pag. S.14

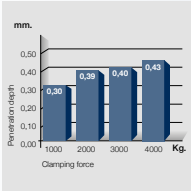

Charts
Penetration depht / clamping force
Pag. S.8

Accessories
Pag. S.18

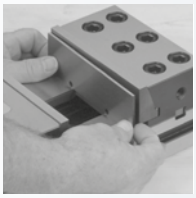

Clak System
Quick change system
Pag. S.10

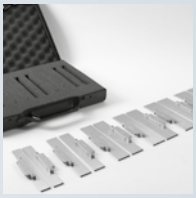

Clak
Modular parallels
Pag. S.19

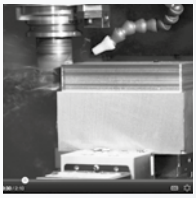

Application examples
Milling on horizontal machining centre, vertical machining centre and 5 axis
Pag. S.11

SinterGrip

Clamping Insert

WATCH THE VIDEO

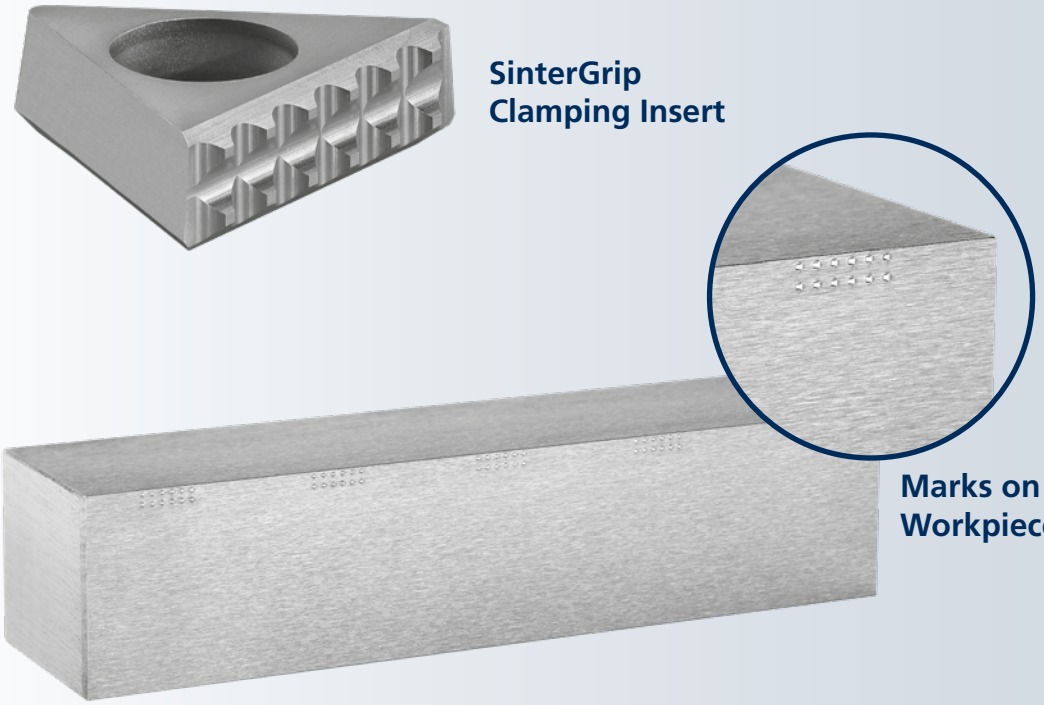

Comparison Clamping Depths

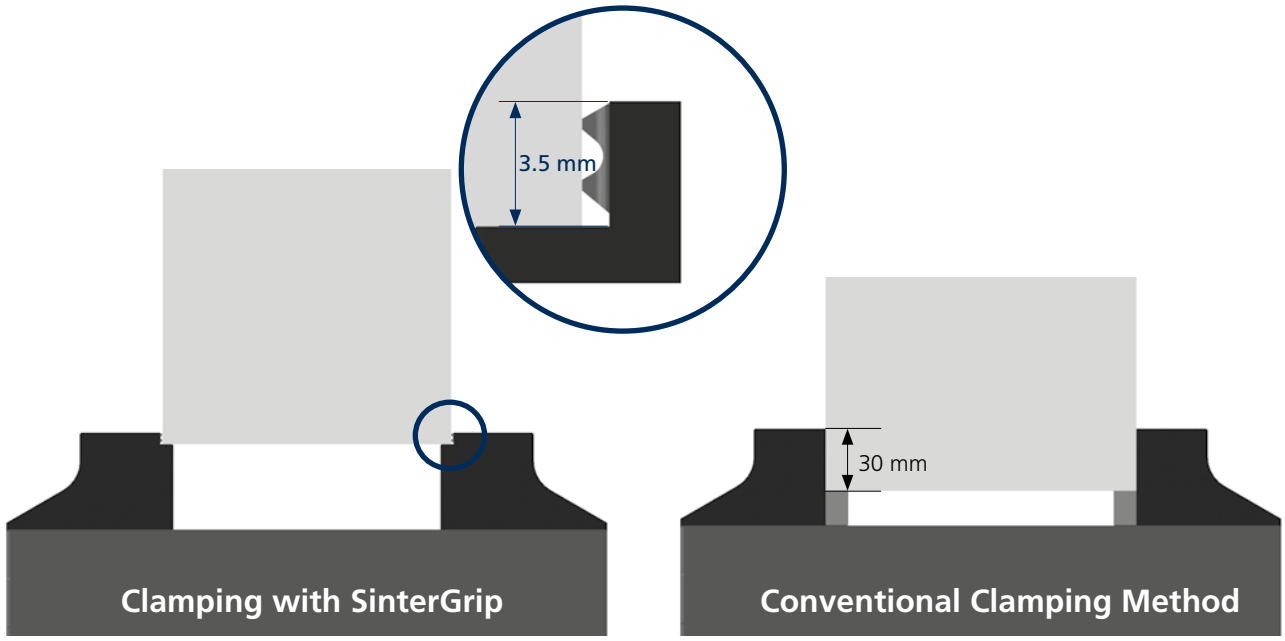

>> Lowest clamping depth of workpieces – no pre-marking

Benefits

1

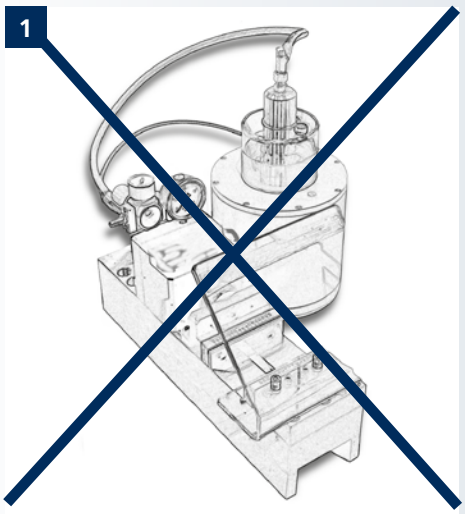

No pre-marking necessary

→ Elimination of the costs for a pre-mark machine and set-up times

2

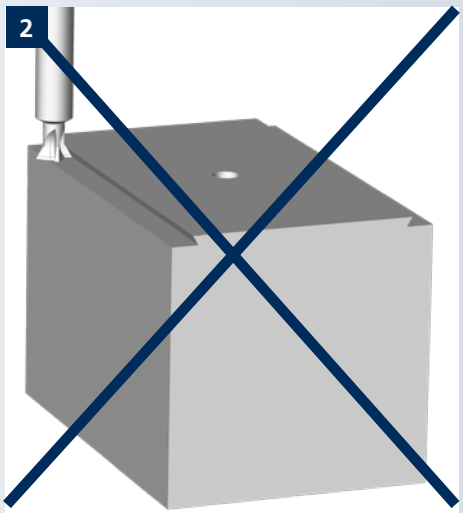

No dove tail pre-machining of the workpiece necessary

→ Elimination of the costs for the pre-machining

3

4 different versions
for all i materials:

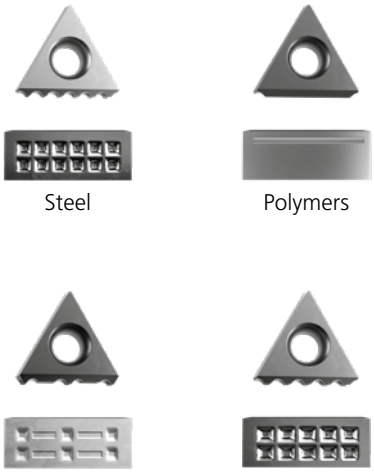

4

Best accessibility and highest holding forces

→ Safe clamping of workpieces
→ Ideal for 5-axis machining
→ High material saving due to lowest clamping depth only 3.5 mm

5

Maximum lifetime | No wear costs
Huge metal removal rate =
less time to machine the workpiece

→ SinterGrip clamping inserts are made from coated carbide steel and have maximum lifetime

6

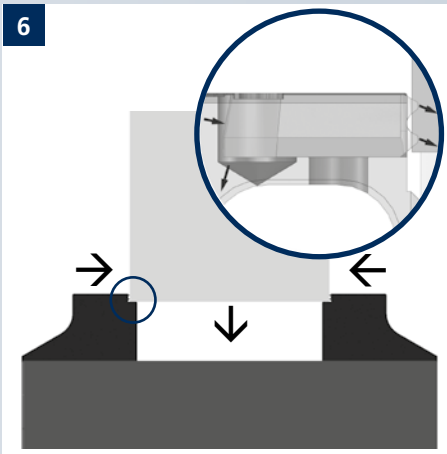

Pull-down effect |
Active vibration absorption

→ Even distribution of the clamping forces and active vibration absorption
→ Geometric couplings without any clearance

SINTERGRIP

The New Choice

Technical features

SinterGrip are solid carbide serrated inserts type ISO P30:P35 and coated with method PVD

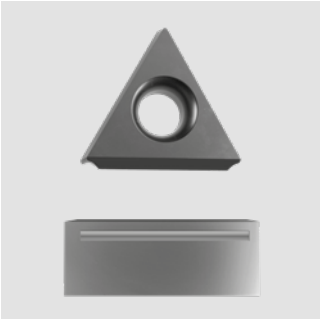
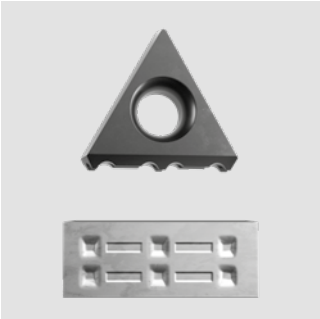

Coated cemented carbide currently represents 80-90% of all cutting tool inserts. Its success as a tool material is due to its unique combination of wear resistance and toughness, and its ability to be formed in complex shapes.

Coated cemented carbide combines cemented carbide with a coating. Together they form a grade which is customized for its application.

The big advantage of **SinterGrip** is therefore the combination of this material together with its own teeth sharpening, the special tapered shape and the special triangular shape, coming from detailed studies by our technical department.

In a general sense, the insert with its own special section of pyramid shape and special teeth sharpening penetrates into the material of the workpiece and creates some coupling without any clearance, unloading the forces and the vibrations, becoming a sole body with the vise and the workpiece.

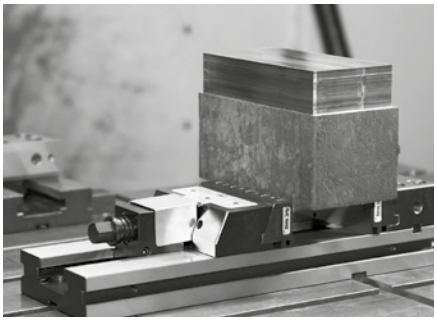
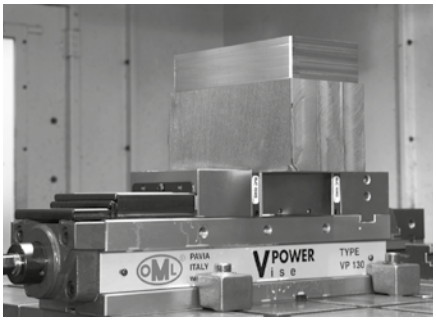

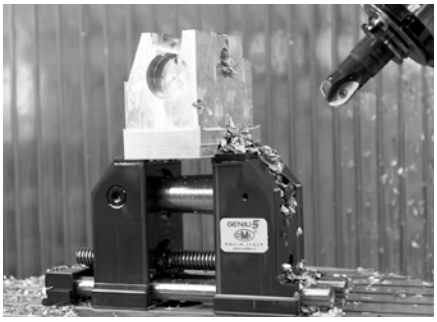

1 The special triangular shape creates a coupling without any clearance, in fact:
- It divides the clamping forces;
- It allows high coupling precision between the gripper (insert) and the jaw of the vise;
- It absorbs the vibrations, allowing high stability.

2 The special tapered shape (5 degrees) of the inserts section: creates pull-down effect into the insert which is transferred to the workpiece, avoiding the lifting of the same.

3 The special teeth sharpening:
- The lower angle is bigger than the upper one. This creates a pull-down effect on the workpiece;
- Permits, after the engraving, to clamp the workpiece with a lower clamping force, avoiding any deformation of the same.

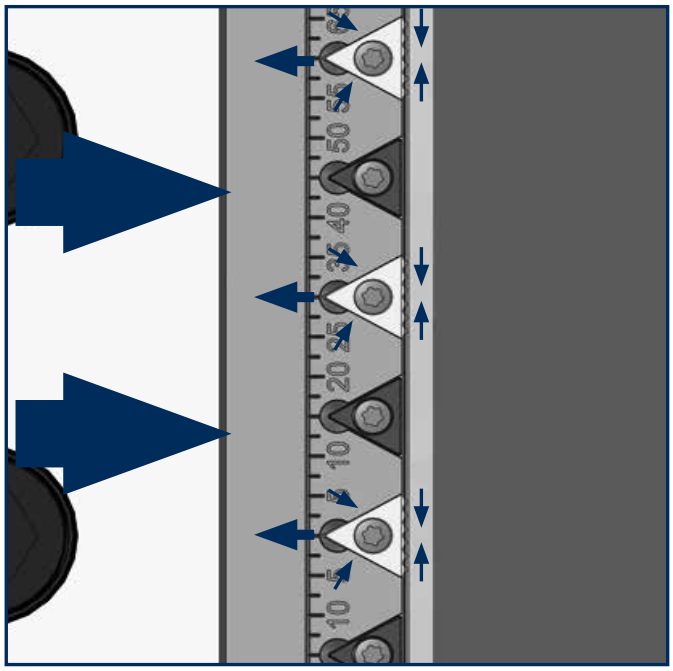

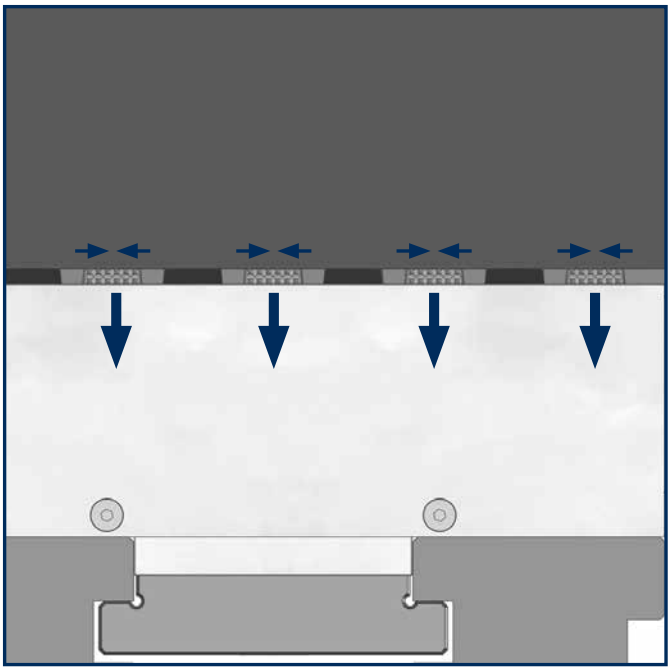

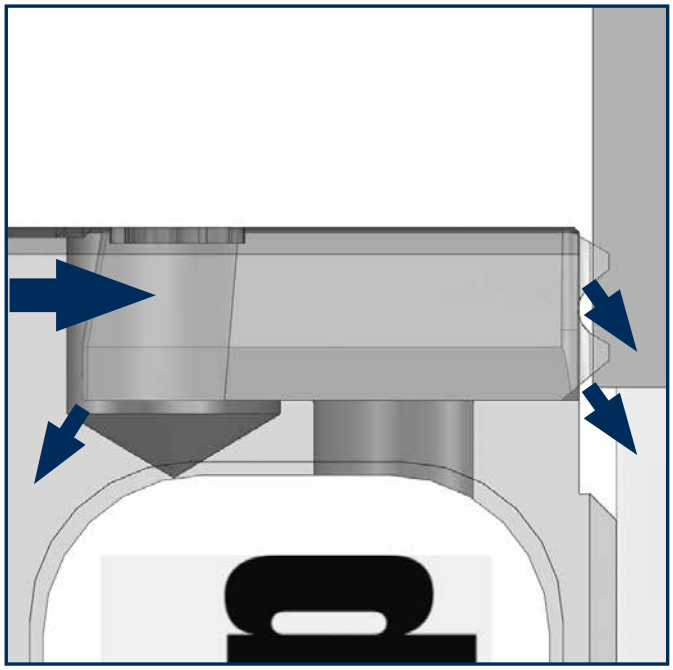

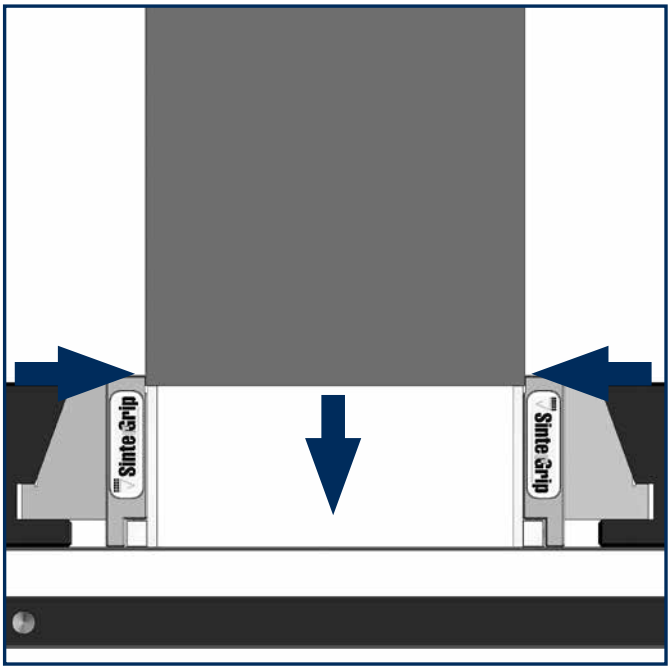

The combination of both elements (the tapered shape and the teeth sharpening) creates a double **pull-down** effect.

SinterGrip insert for steel (STD)

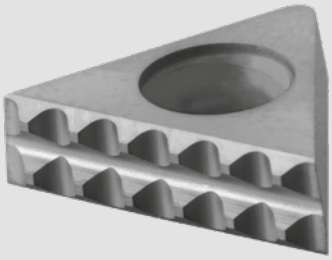

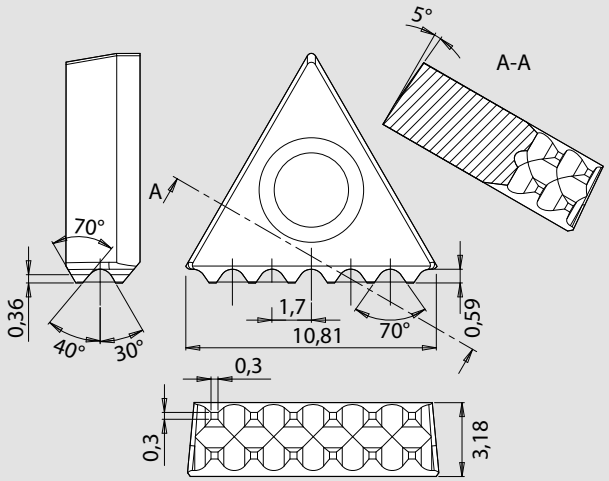

SinterGrip insert for hard steel / titanium (until 50-54 HRC)

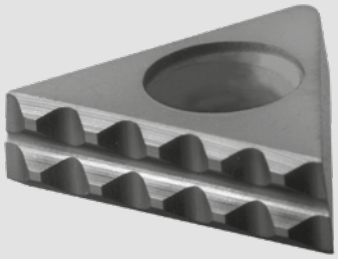

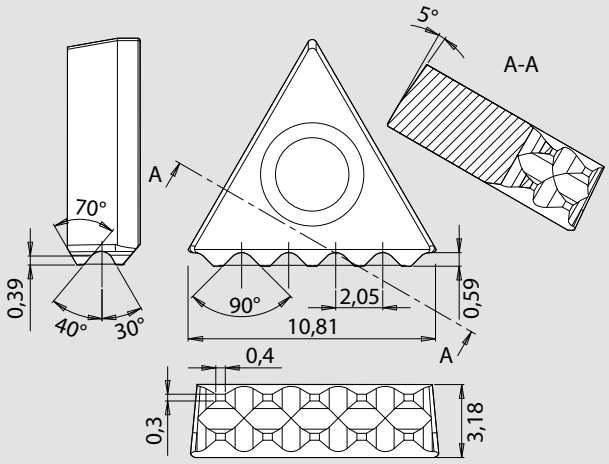

SinterGrip insert for polymeric materials

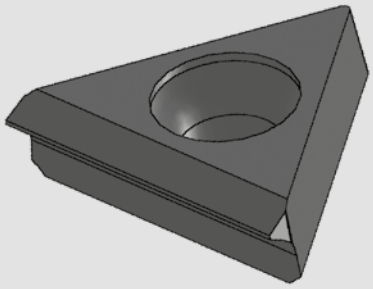

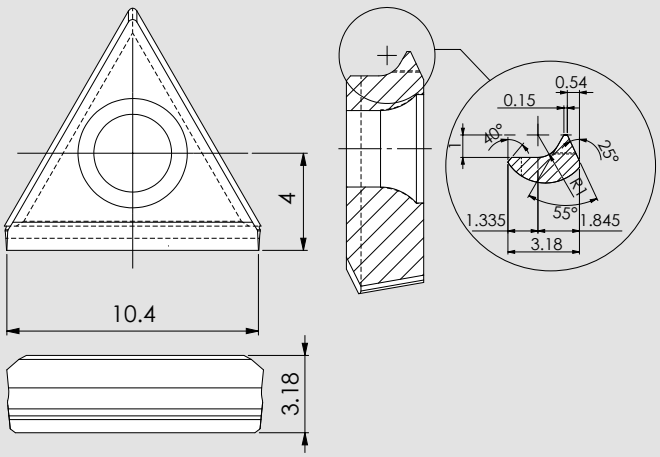

SinterGrip insert for aluminium (ALU)

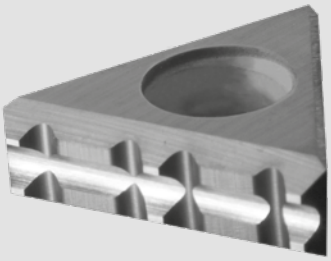

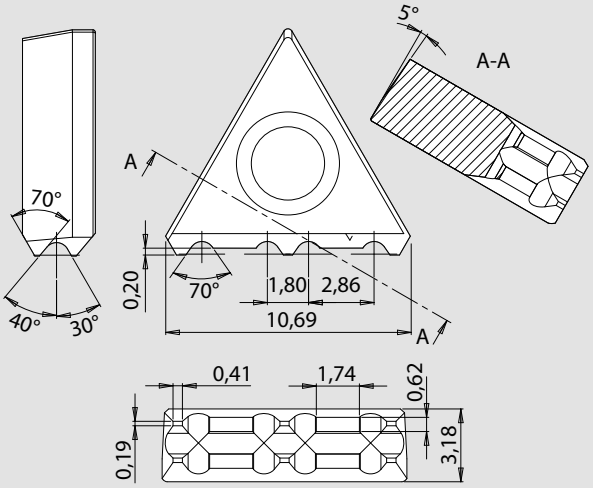

Engraving in aluminium

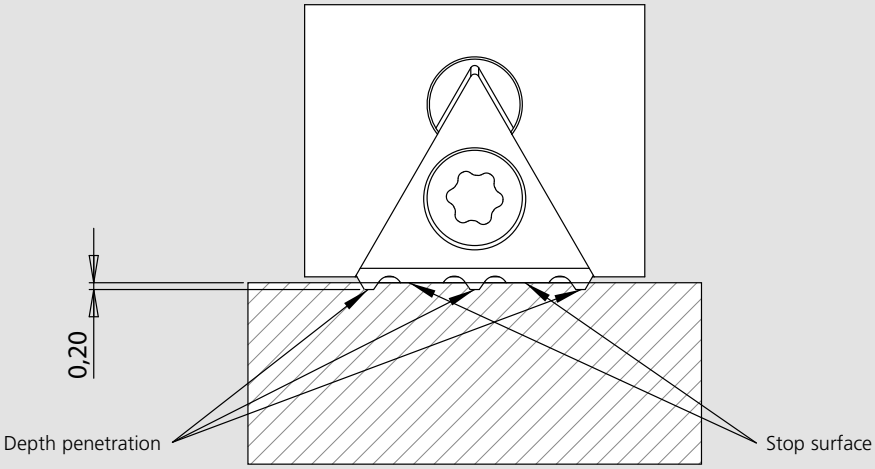

The values indicated in the chart are those of the penetration of each tooth of the insert, in relation to the number of inserts used, the type of material and the clamping force.

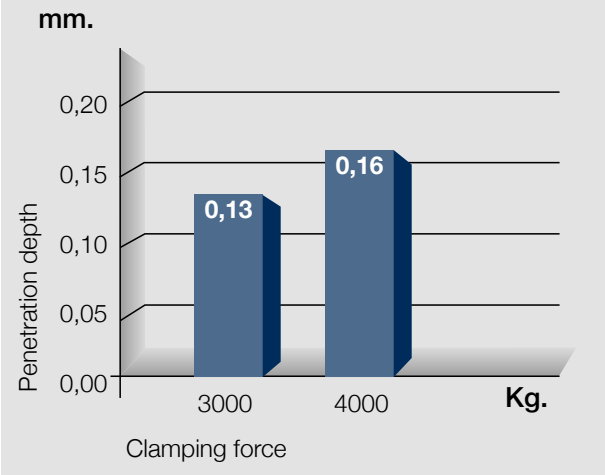

Steel with tensile strength ≈ 980 N/mm²
n. 5 inserts for jaw
10 inserts total
clamping surface 3,5 mm

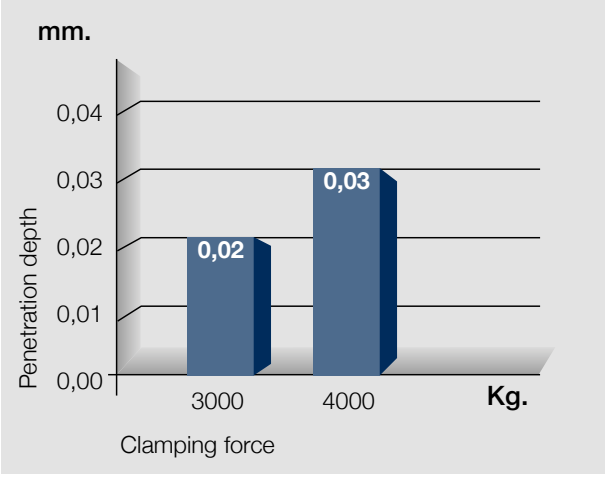

Hardened steel HRC 50-54
n. 5 inserts for jaw
10 inserts total
clamping surface 3,5 mm

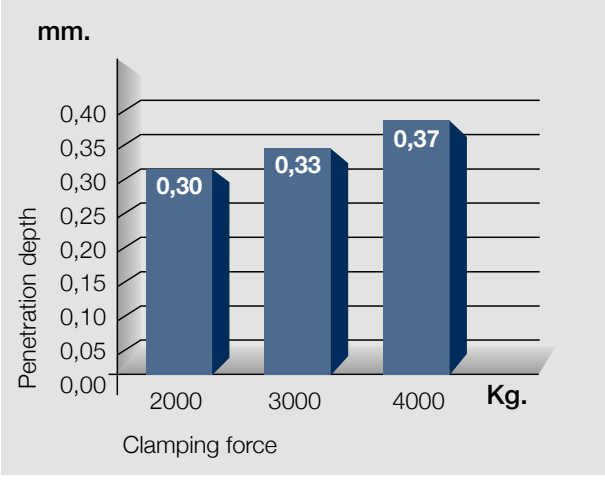

Alluminium
n. 5 inserts for jaw
10 inserts total
clamping surface 3,5 mm

The ratio between inserts and penetration depth is inversely proportional, that is, fewer inserts = more penetration

Steel with tensile strength ≈ 980 N/mm²
n. 1 inserts for jaw
2 inserts total
clamping surface 3,5 mm

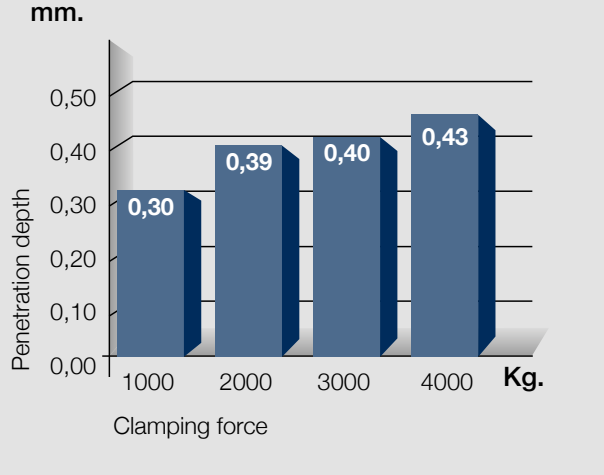

The same proportion is comparable
to the clamping surface for only 2 mm,
that is with one row of teeth per insert (see chart).

Steel with tensile strength ≈ 980 N/mm²
n. 5 inserts for jaw
10 inserts total
clamping surface 2 mm

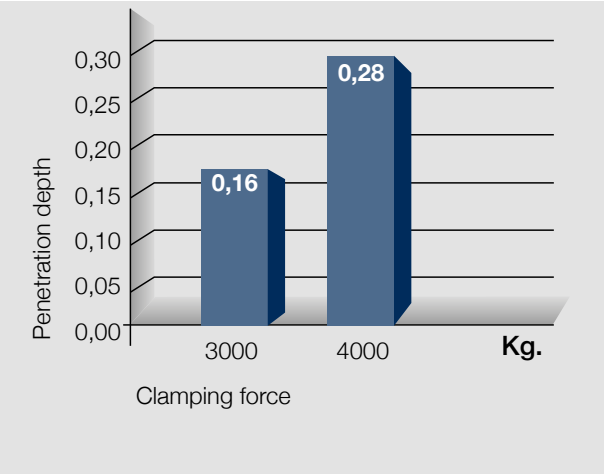

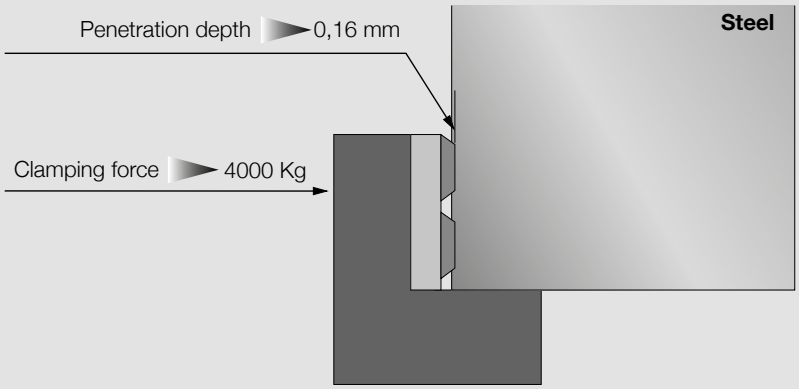

Example
Steel with tensile strength ≈ 980 N/mm²
n. 5 inserts for jaw
10 inserts total
clamping surface 3,5 mm

SINTERGRIP

The New Choice

CLAK SYSTEM

The SinterGrip method is proposed together with our unique quick change **CLAK System** for a perfect combination of performances.

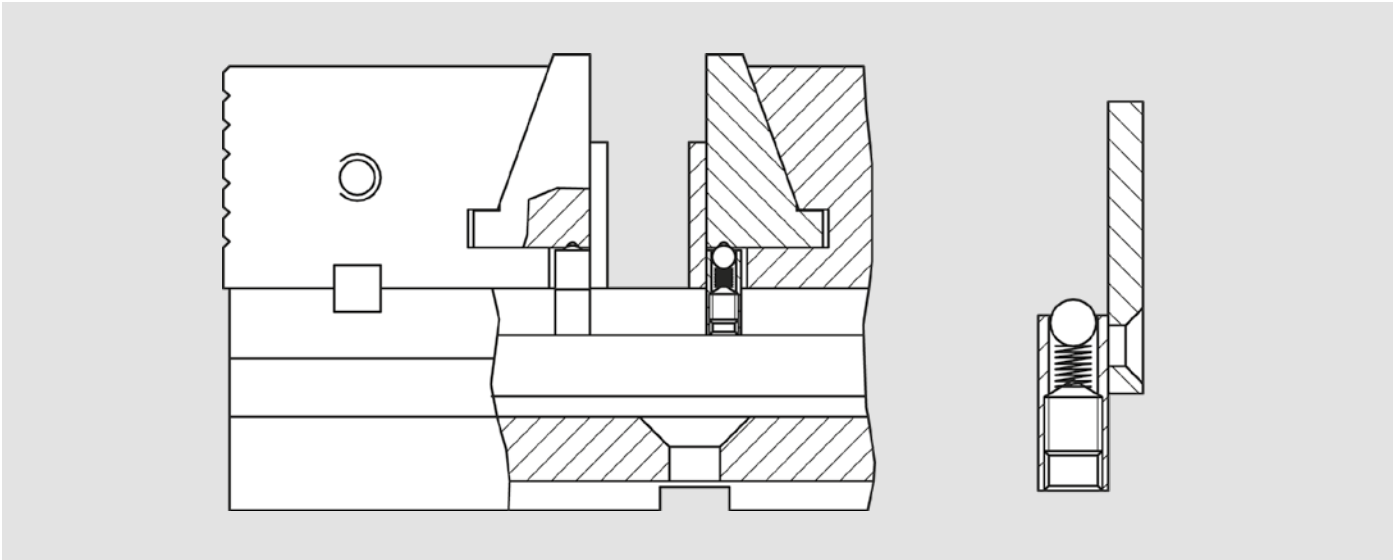

CLAK System for OML vise

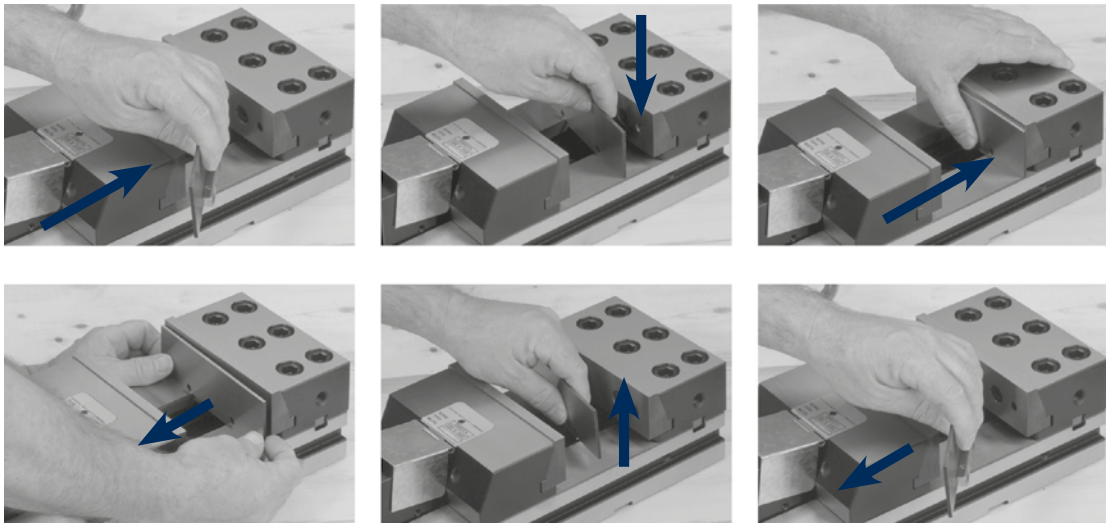

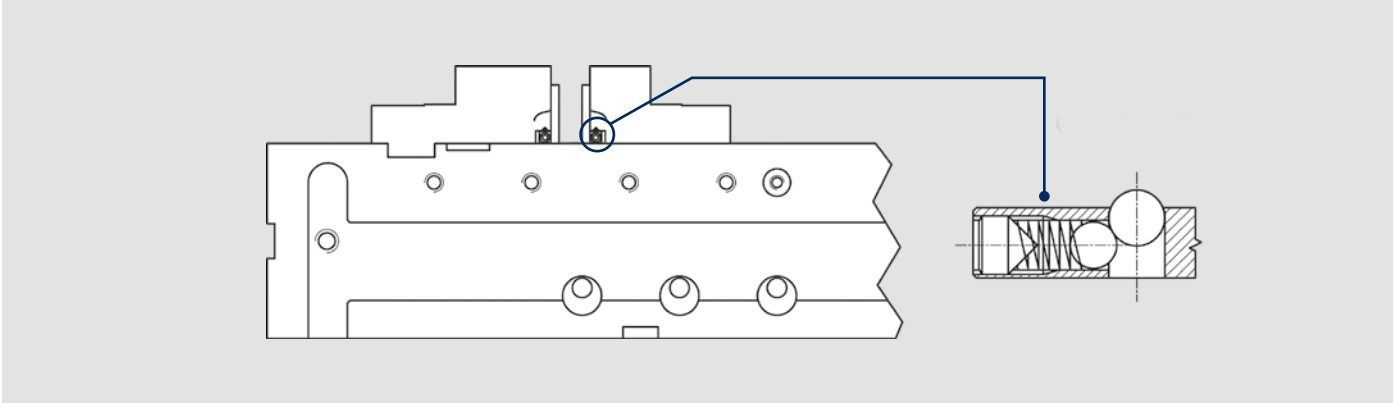

Universal CLAK System

Milling on horizontal machining centre

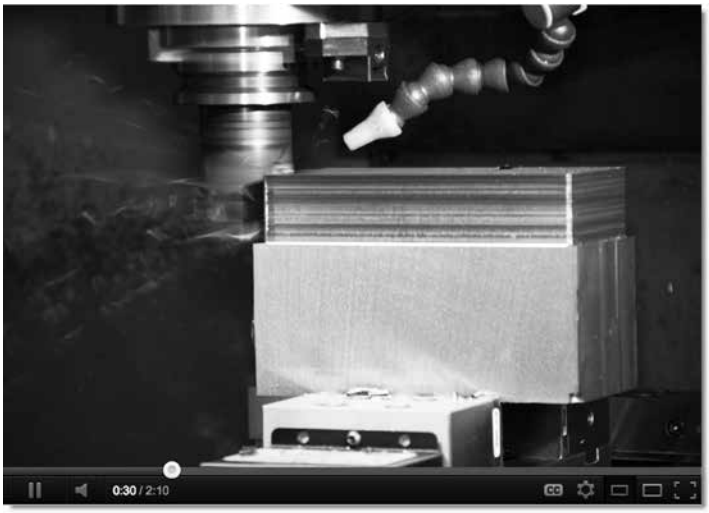

Milling on vertical machining centre

Milling on 5 axis

SinterGrip can be used with all the mechanical, mechanical-hydraulic or hydraulic clamping systems.
For all the other clamping systems, please check the compatibility of these systems with grippers.

SinterGrip is proposed in the following possibilities:

ALL IN ONE

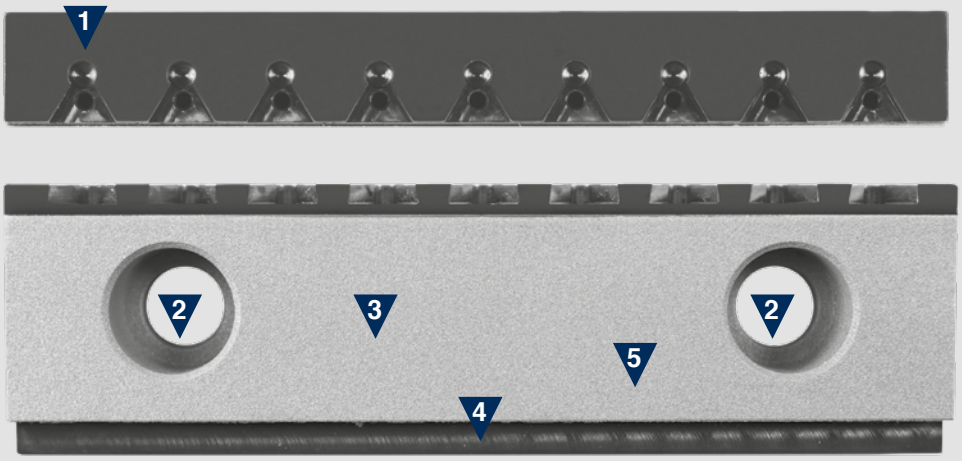

1. Shape of the self-centering seat of the insert with dovetail interlocking
2. Fixing holes to the vise
3. Tungsten carbide coating for better grip in the second operation
4. Seat for Clak system
5. Made of steel with tensile strength ≈ 1.080 N/mm^2 + nitriding

STANDARD

1. Shape of the self-centering seat of the insert with dovetail interlocking
2. Fixing holes to the vise
3. Seat for Clak system
4. Made of steel with tensile strength ≈ 1.080 N/mm² + nitriding

STARTER KIT

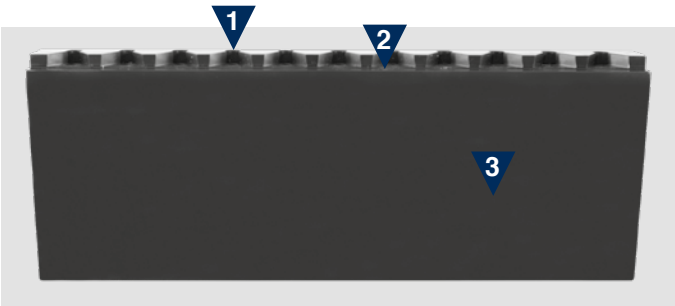

1. Shape of the self-centering seat of the insert with dovetail interlocking
2. Step 3,5x4 mm
3. Made of steel with tensile strength ≈ 980 N/mm² + nitriding

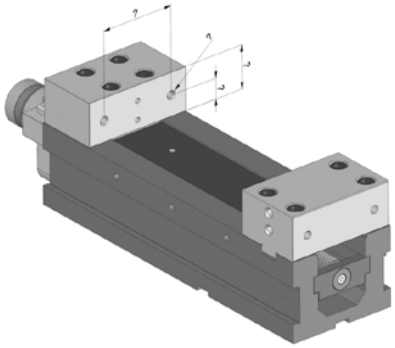

Take the necessary dimensions of your vise

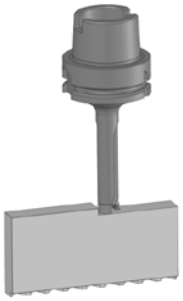

Mill the jaws to the necessary height

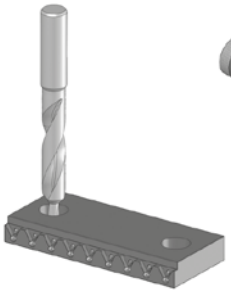

Drill the jaws at the same height of the supports of the vise

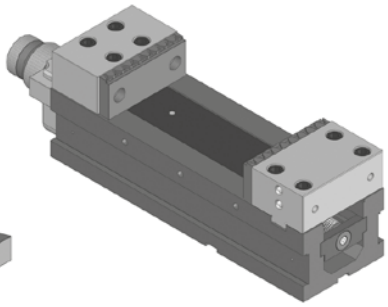

Mount the kit on your vise

ALL IN ONE

Pair of jaws with tungsten carbide coating.
The set includes one pair of jaws, 1 pair of parallels (**PP**), 1 wrench TORX T9 and one kit of 10 screws.

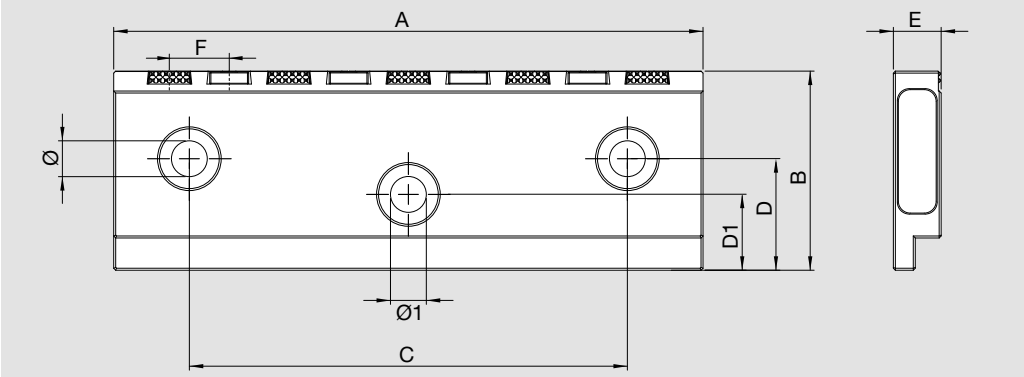

Check the dimensions of your jaws before purchasing

Model	Id. No.	A	B	C	D	D1	E	Ø	Ø1	H parallels	F	n. inserts
		mm	mm	mm	mm	mm	mm	mm	mm	mm	mm	
ALLMATIC - T-REX / TITAN	58452119	124,4	39,5	88	12,3	18	12	7	11	36,5	14	9
GRESSEL/WNT / SCHUNK / FRESMAK / VP-N	58452129	125	40	80	15	-	12	9	-	36,5	14	9
OML - VISE POWER	58452139	130	52	90	25	-	12	11	-	49	14	9
HILMA	58452149	125	45	80	14	-	12	9	-	42	14	9
OML - TC 110 mm	58452159	106	40	80	23	-	12	7	-	37	15	7
OML - TC/MC 150 mm	58452219	148	50	110	28	-	12	9	-	47	15	9
KURT 6”	58452229	152	44,1	98,4	23,6	-	18,4	13,5	-	35	15,875	9
ALLMATIC - T-REX / TITAN	58452319	160	49,8	88	12,3	20	12	7	11	47	14	11
GRESSEL/WNT / SCHUNK / FRESMAK	58452329	160	50	100	20	-	12	11	-	47	14	11
OML - VISE POWER	58452339	160	55	90	25	-	12	11	-	52	14	11
HILMA	58452349	160	54	100	17	-	12	11	-	51	14	11
OML - TC/MC 200 mm	58452419	196	70	130	49	-	18	9	-	67	15	13

Special jaws “All in one” upon request

STANDARD

Pair of jaws without tungsten carbide coating.
The set includes one pair of jaws, 1 pair of parallels (**PP**), 1 wrench TORX T9 and 1 kit of 10 screws.

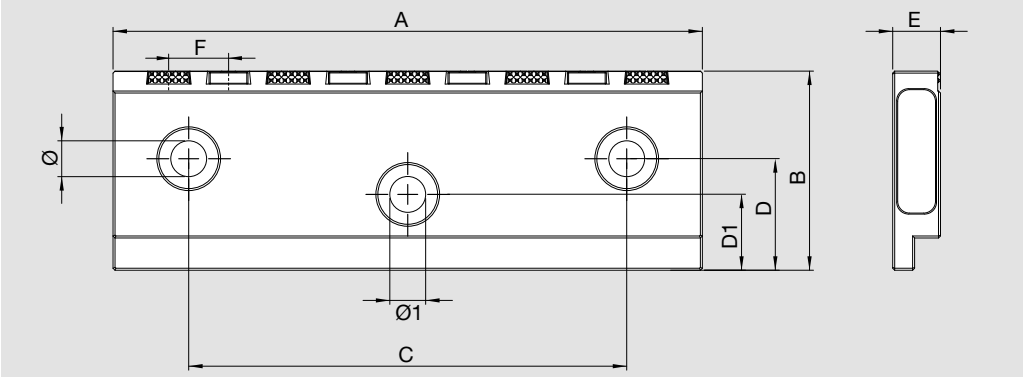

Check the dimensions of your jaws before purchasing

Model	Id. No.	A	B	C	D	D1	E	Ø	Ø1	H parallels	F	n. inserts
		mm	mm	mm	mm	mm	mm	mm	mm	mm	mm	
ALLMATIC - T-REX / TITAN	58451119	124,4	39,5	88	12,3	18	12	7	11	36,5	14	9
GRESSEL/WNT / SCHUNK / FRESMAK / VP-N	58451129	125	40	80	15	-	12	9	-	36,5	14	9
OML - VISE POWER	58451139	130	52	90	25	-	12	11	-	49	14	9
HILMA	58451149	125	45	80	14	-	12	9	-	42	14	9
OML - TC 110 mm	58451159	106	40	80	23	-	12	7	-	37	15	7
OML - TC/MC 150 mm	58451219	148	50	110	28	-	12	9	-	47	15	9
KURT 6”	58451229	152	44,1	98,4	23,6	-	18,4	13,5	-	35	15,875	9
ALLMATIC - T-REX / TITAN	58451319	160	49,8	88	12,3	20	12	7	11	47	14	11
GRESSEL/WNT / SCHUNK / FRESMAK	58451329	160	50	100	20	-	12	11	-	47	14	11
OML - VISE POWER	58451339	160	55	90	25	-	12	11	-	52	14	11
HILMA	58451349	160	54	100	17	-	12	11	-	51	14	11
OML - TC/MC 200 mm	58451419	196	70	130	49	-	18	9	-	67	15	13

Special jaws “All in one” upon request

STANDARD

Model	Id. No.
OML - GENIUS	58451519

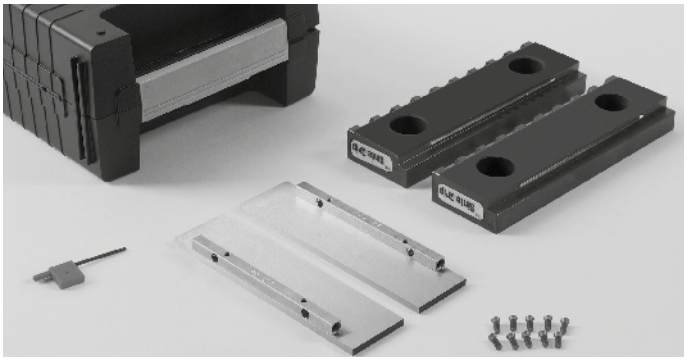

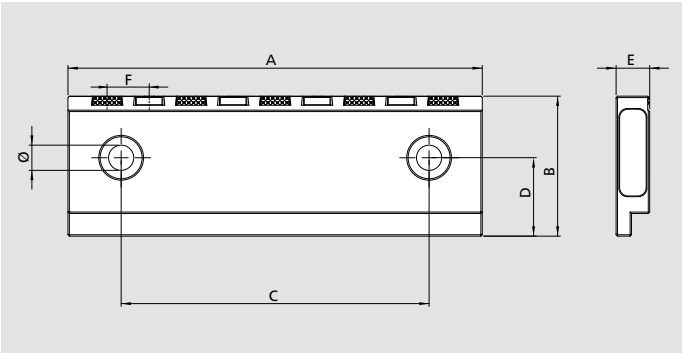

Pair of jaws without tungsten carbide coating.
The set includes one pair of jaws, 1 pair of parallels (H35 thickness 6 mm), 1 wrench TORX T9 and 1 kit of 10 screws.

Type	Id. No.	A	B	C	D	E	Ø	H parallels	F	n. inserts
		mm	mm	mm	mm	mm	mm	mm	mm	
Kit 1 Op Sint. 150 XL	50240520	148	50	110	28	12	9	35	15	9

STARTER KIT

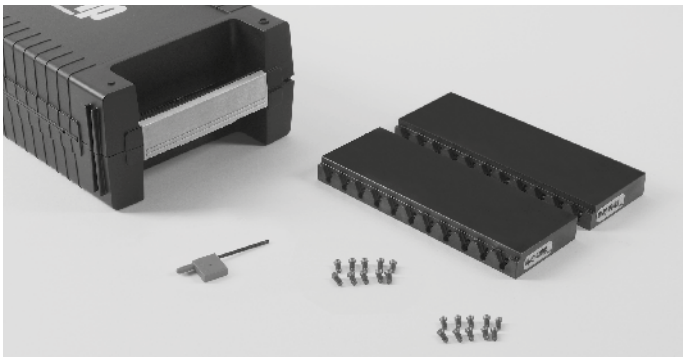

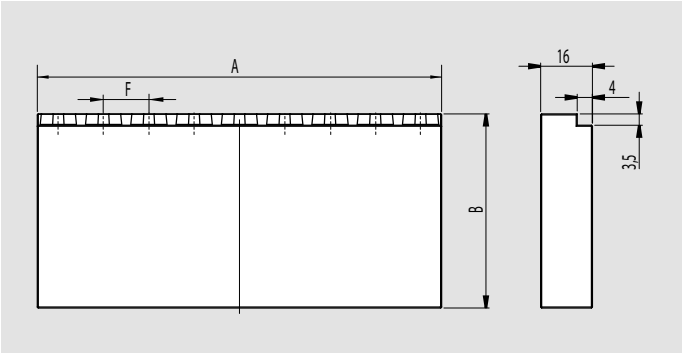

Pair of jaws.
The set includes one pair of jaws, 1 wrench TORX T9 and 1 kit of 10 screws

Id. No.	A	B	F	n. inserts
	mm	mm	mm	
58453119	125	59	14	9
58453319	160	59	14	11
58453419	200	70	15	13

SINTERGRIP

SinterGrip inserts. The set includes n. 10 inserts

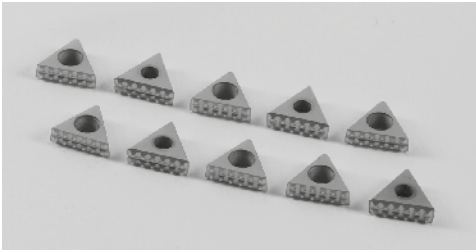

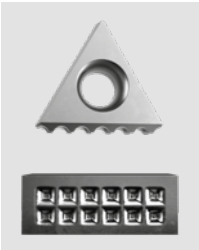

Id. No.	Description
58450119	Set of 10 SinterGrip inserts **STD** for steel

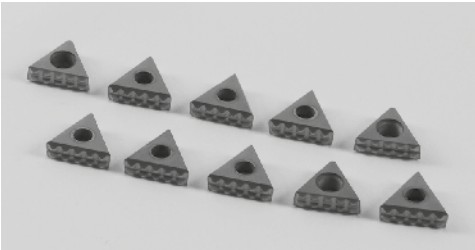

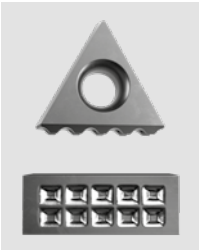

Id. No.	Description
58450129	Set of 10 SinterGrip inserts **HRC** for hardened steel / titanium until 50-54 HRC

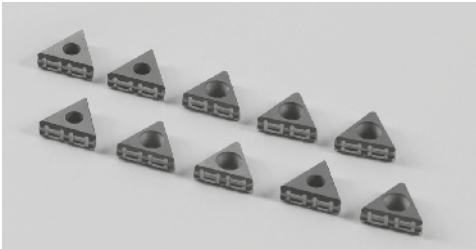

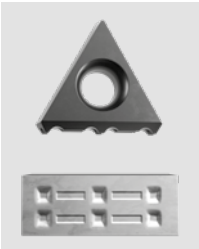

Id. No.	Description
58450139	Set of 10 SinterGrip inserts **ALU** for aluminium

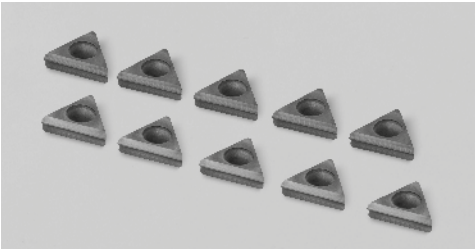

Id. No.	Description
58450149	Set of 10 SinterGrip inserts **PLM** for polymeric materials

ACCESSORI

Id. No.	Description
58450219	Set 10VTX30 for inserts SINTERGRIP

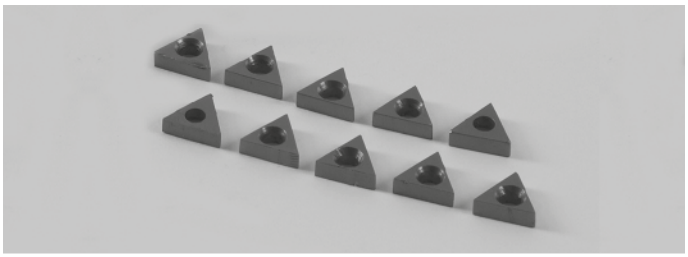

Id. No.	Description
58450519	Set 10 protection inserts in aluminum

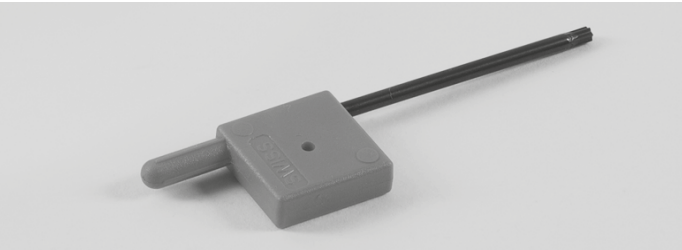

Id. No.	Description
58450320	Wrench TORX T9

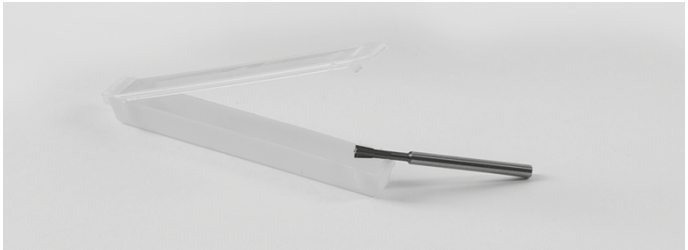

Id. No.	Description
58450410	Special cutting tool D3

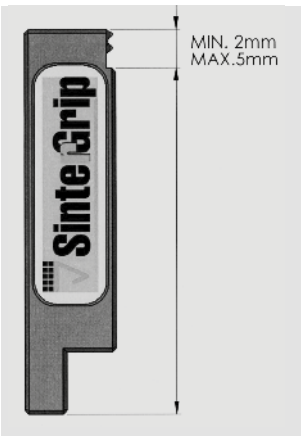

2nd Op. No need to disassemble the inserts

Quick change modular parallels for OML vises TC/MC

The set includes n. 6 pairs of parallels

Id. No.	Model	A	B	C
		mm	mm	mm
58459216	OML TC/MC 150 mm	146	20/25/30/35/45* / 48**	3
58459416	OML TC/MC 200 mm	195	25/35/45/55/65* /68**	3

* SinterGrip clamping surface 5 mm
** SinterGrip clamping surface 2 mm

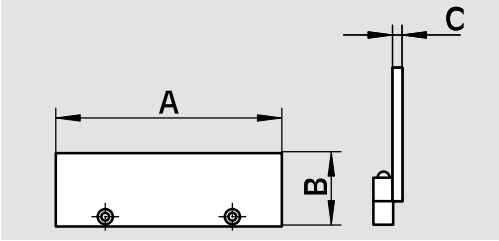

UNIVERSAL quick change modular parallels

The set includes n. 6 pairs of parallels

Id. No.	Model	A	B	C
		mm	mm	mm
58459116	ALLMATIC GRESSEL/WNT/SCHUNK/FRESMAK	124	15/20/25/30/35* /37,5**	4
58459136	VISE POWER	124	15/20/25/30/37,5* /50**	4
58459146	HILMA	124	15/20/25/30/40* /43**	4
58459226	KURT 6”	149	15/20/25/30/39* /42**	4
58459236	OML - LC / GERARDI 150 mm	149	15/20/25/30/58* /61**	4
58459316	ALLMATIC GRESSEL/WNT/SCHUNK/FRESMAK	159	15/25/35/40/45* /48**	4
58459336	VISE POWER	159	15/25/35/40/50* /53**	4
58459346	HILMA	159	15/25/35/40/49* /52**	4

* SinterGrip clamping surface 5 mm
** SinterGrip clamping surface 2 mm

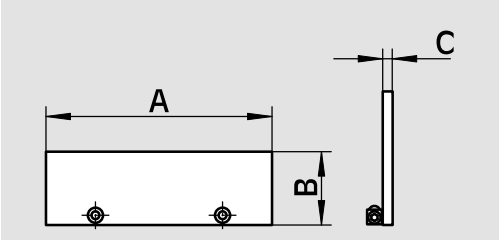

Order example for special executions

58450410 - cutting tool D3
58450119 - set 10 inserts STD
58450219 - set 10 screws VTX30

Order example for jaws

58452219 - pair of jaws All in One
58450119 - set 10 inserts STD
58450519 - kit 10 protection inserts

APS

Zero Point Clamping System

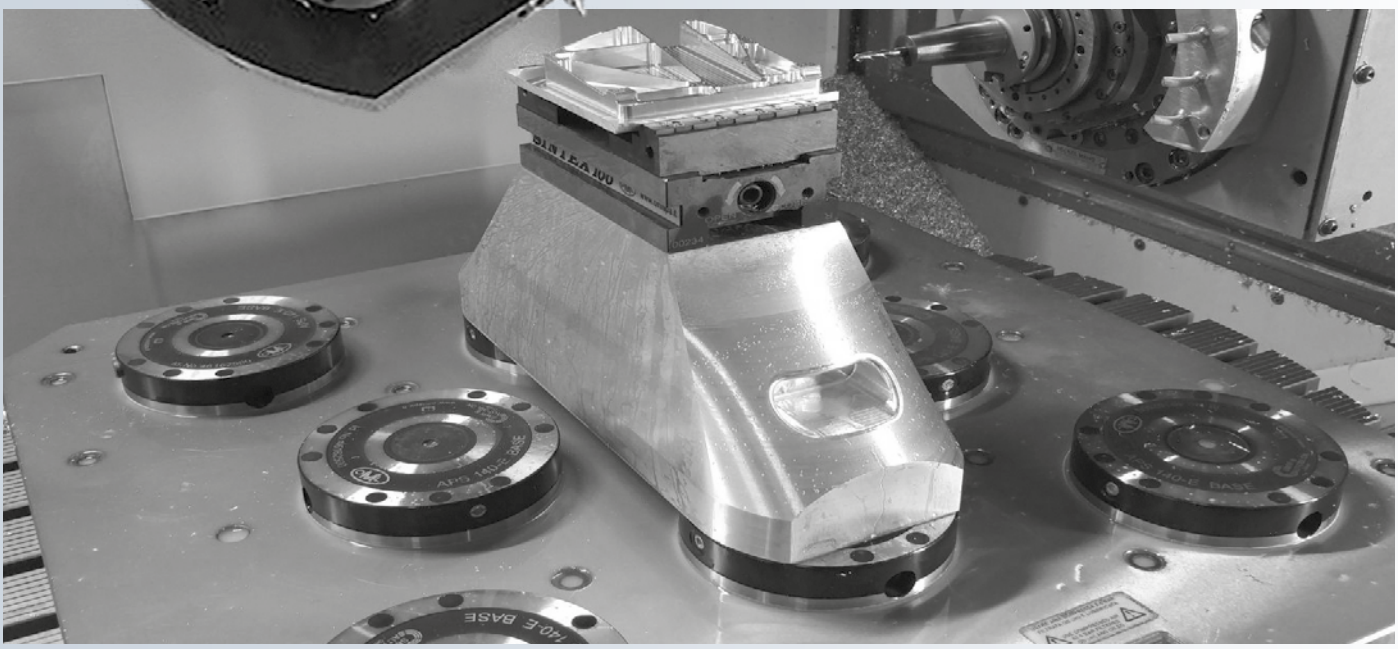

APS

Zero Point Clamping System

Page 0.10

APS
Zero point clamping system modules
- Highest precision
- Wear-resistant and rust protected
- Maximum pull-in forces due to turbo function
- Suitable for automation
- Low installation height due to compact design
- Modules fully sealed (proofline)

Page 0. 17

APS
Clamping pins
- Large entry radii on the clamping pins for easy and safe loading
- Wear-resistant

Page 0. 21

APS
Clamping units
- Fully assembled clamping unit
- Ready to use
- Customer-specific versions available in a short time

Page 0. 31

APS
Module height extensions
- Ready to use single module units
- Different heights

Page 0. 36

APS
Special clamping units
- Customer-specific versions
- For vertical lathes
- For automation

APS
WATCH THE VIDEO

Page 0. 42

APS
Special module height extensions
- For automation

Page 0. 48

APS
Combi units
- Ready to use combi module units
- Different heights

Page 0. 50

APS
Clamping pallets
- Fully assembled clamping pallet
- Optional with interface for module height extension
- Customized clamping pallets for any machine / application

Page 0. 56

APS
Spacers
- Adapt one or more combi units

Page 0. 57

APS
Accessories
- Protection covers
- Pins and keys for orientation (single use)
- Fixing screws for clamping units

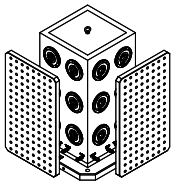

Page 0. 61

APS
Accessories
- Tombstone
- Crankwebs
- Plates

AUTOMATIC POSITIONING SYSTEM

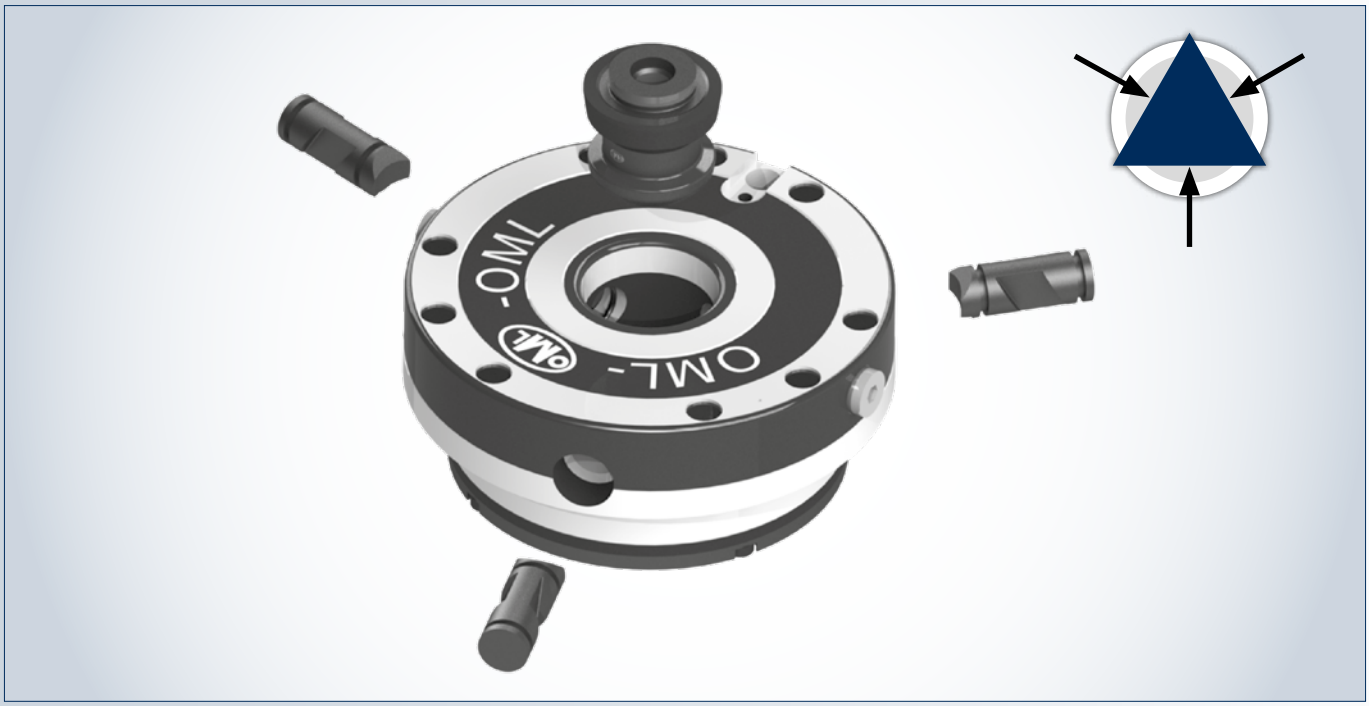

CLAMPING SYSTEM WITH 3 JAWS AT 120°

APS is the only one clamping system ZERO POINT with 3 jaws at 120° and thanks to special treatments antifriction and anticorrosion of the pins and the clamping jaws (already preliminarily treated to 62 HRC), further improves its performance.

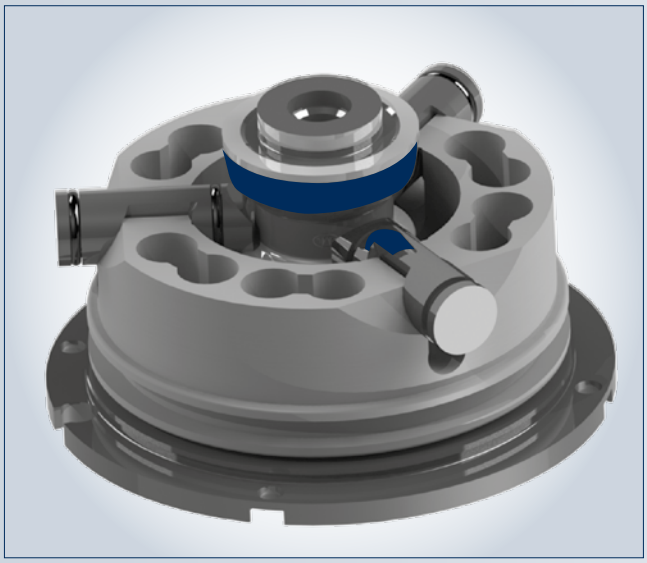

MAXIMUM RIGIDITY!

- Monolithic piston with inclined planes
- Jaws with double inclined plane which generates the "PULL DOWN" effect

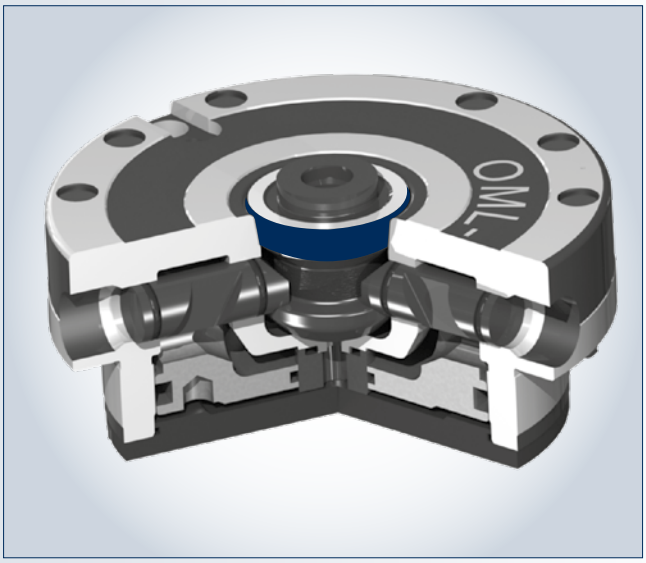

MAXIMUM ACCURACY!

Maximum accuracy of the tapered coupling between the pin and the module

AUTOMATIC POSITIONING SYSTEM

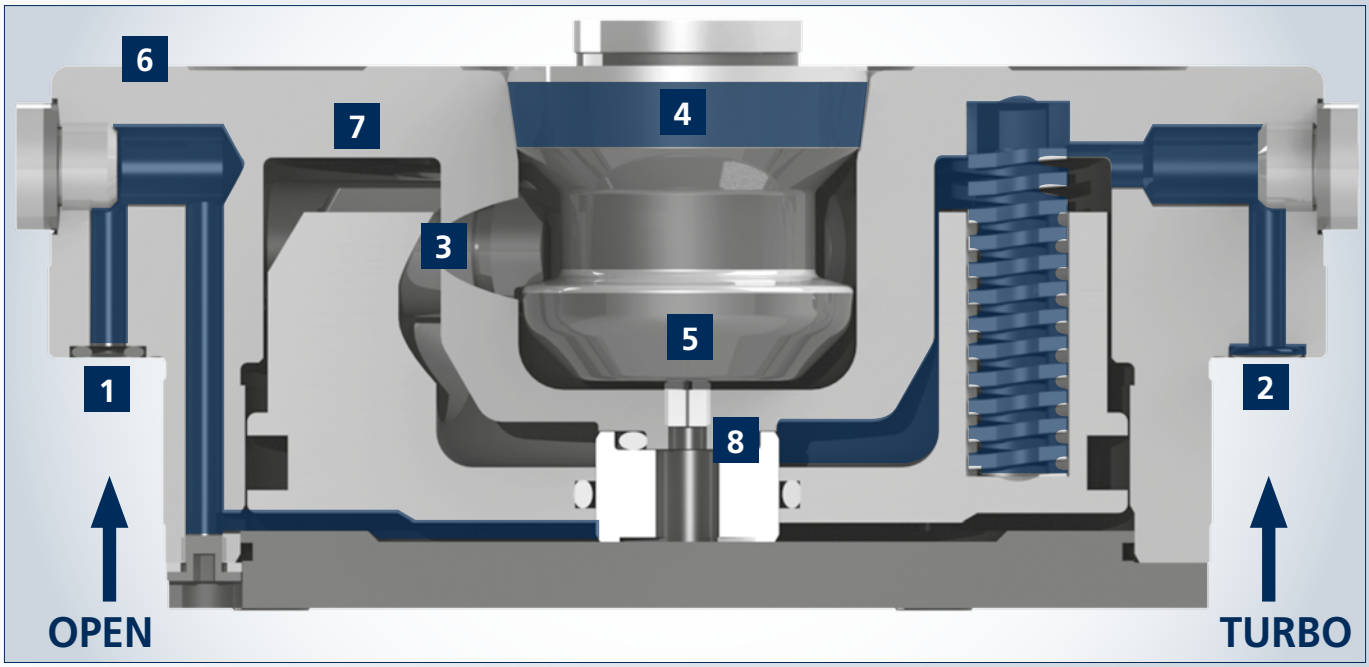

Functional Overview of the APS Zero Point Clamping System

1. Unlocking function
2. Turbo function for increasing the pull-in forces
3. 3 Clamping slides for maximum stiffness and protective coating (wear-resistant and rust protected)
4. Clamping pins with precise short taper centering and protective coating (wear-resistant and rust protected)
5. Large entry radii of the clamping pins for easy and safe loading
6. Large flat surface for highest stiffness
7. Hardened parts
8. Air cleaning (while opening the modules)

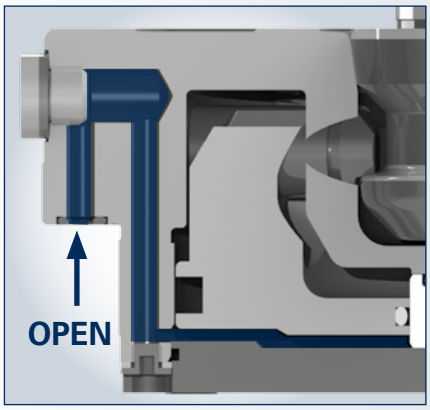

UNLOCKING FUNCTION at 6 bar

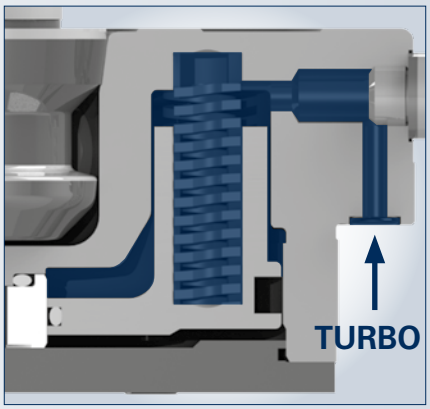

TURBO FUNCTION

The Turbo function is always integrated in APS PREMIUM modules. Turbo is the function by means of which the compressed air increases the clamping force applied by the springs until reaching the "PULL DOWN" clamping force of 45 kN.

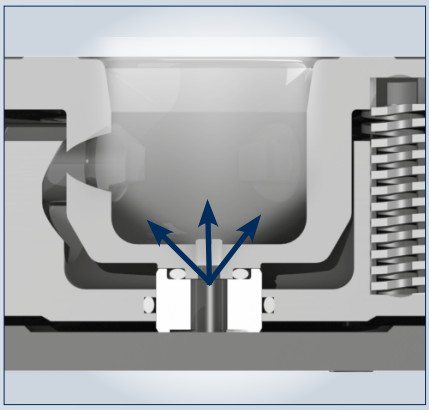

AUTOMATIC CLEANING FUNCTION (APS PREMIUM)

Stroke control system

The patented SC system is ideal for automated applications with robot loading and unloading of the pallets. The APS locking and unlocking is monitored by air pressure.

Locking position
The air enters from the lower side inlet the hole and exits out from the hole **w** = pressure drop in the line and the machine receives a "APS locked" confirmation.

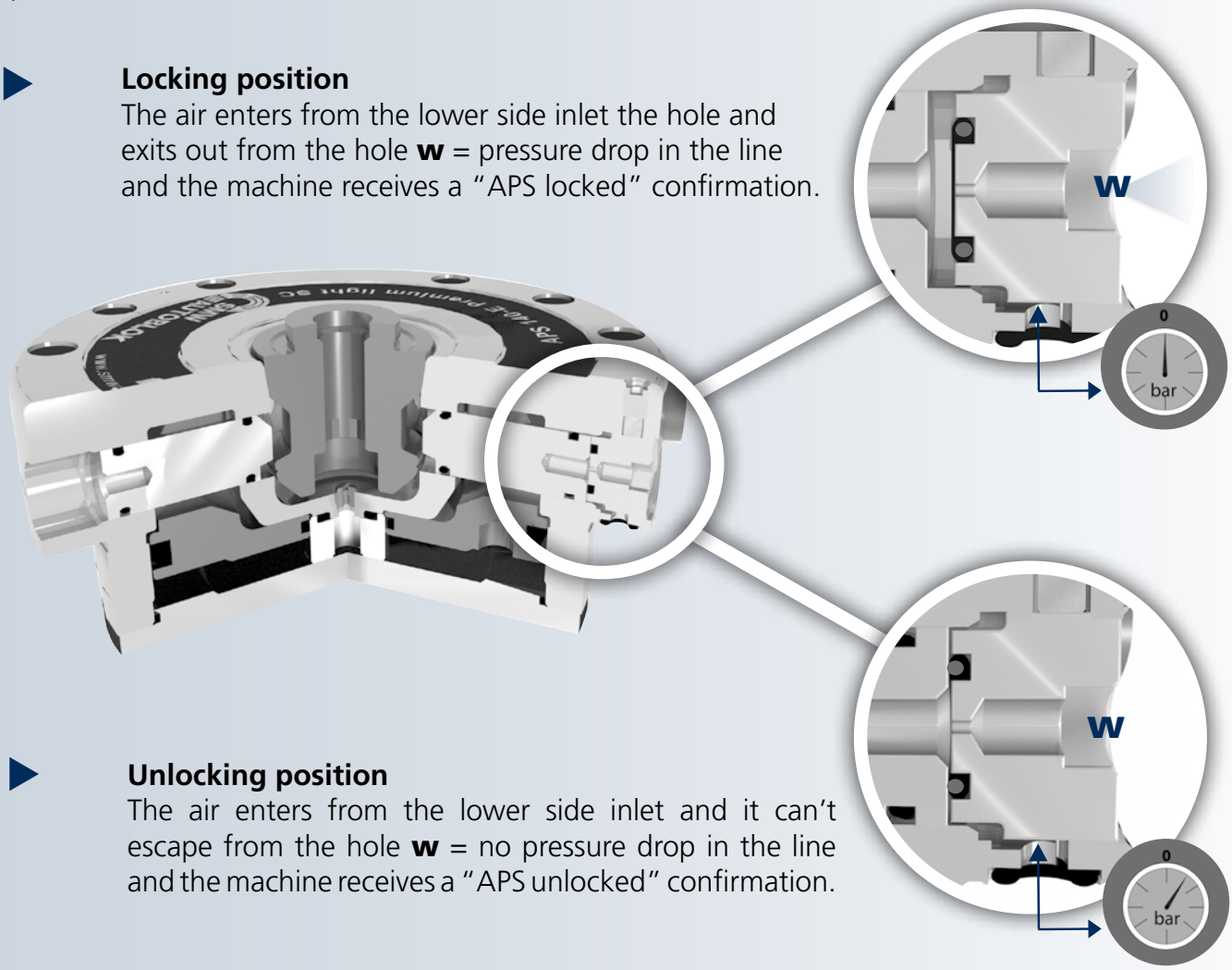

Unlocking position
The air enters from the lower side inlet and it can't escape from the hole **w** = no pressure drop in the line and the machine receives a "APS unlocked" confirmation.

ATTENTION: the pneumatic system of the pressure switch must signal the alarm condition and must prevent the pallet exchange on the APS or any robot operation when the inlet pressure is less than 6 bar.

APS zero point clamping system

Industry 4.0 Product

1 Customer benefits

- Fully sealed (proofline)
- Highest stiffness by means of 3 clamping slides
- Low installation height due to the compact design
- Highest process reliability and repeat accuracy < 0.005 mm
- Modular construction kit system: Existing clamping systems can be modified very easy
- Significantly reduced costs due to reduced set-up times

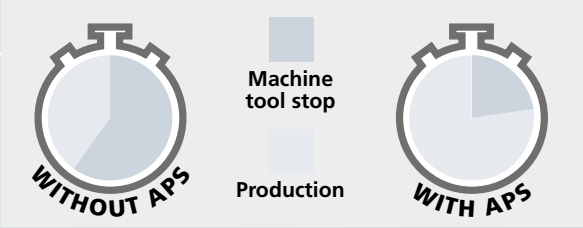

2 Machine set-up costs

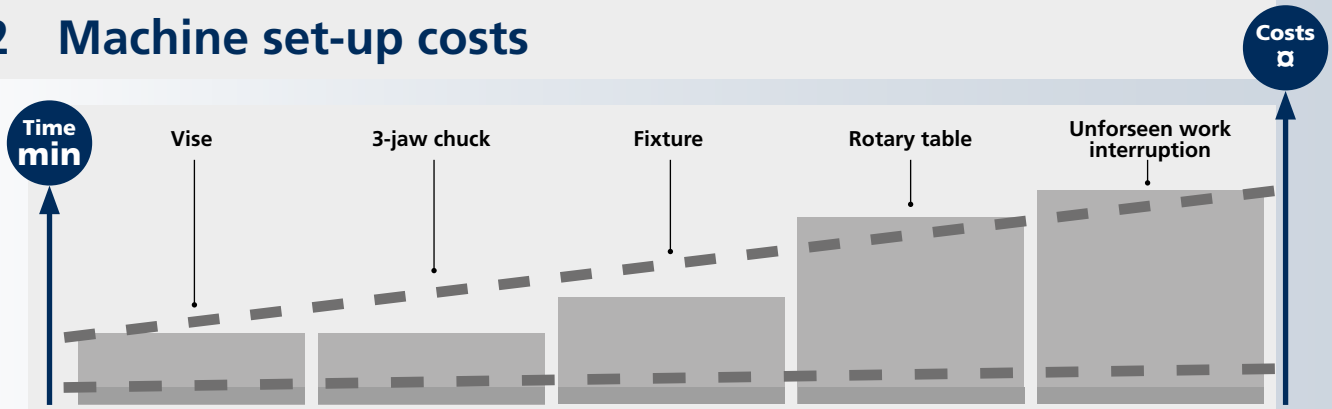

- Machine set-up costs without APS

  Time = Costs

- Machine set-up costs with APS

  Time = Costs

WATCH THE VIDEO

Overview APS versions

BASIC
- 2 Clamping slides
- Turbo function
- Sealed (proofline®)

PREMIUM LIGHT
- 3 Clamping slides
- Turbo function
- Air cleaning
- Sealed (proofline®)

PREMIUM LIGHT SC
- 3 Clamping slides
- Turbo function
- Air cleaning
- Stroke control system
- Air sensing
- Sealed (proofline®)

PREMIUM
- 2-3-6 Clamping slides (based on sizes)
- Turbo function
- Air cleaning (100-140 sizes)
- Stroke control system
- Air sensing
- 2 or 4 feedings
- Sealed (proofline®)

Type	APS classification	Size	Clamping slides	Turbo	Air cleaning	Stroke control	Air sensing	Key	Feedings	+10°C + 70°C	+10°C + 130°C
BASIC	BASIC	100	2	●						●	
		140	2	●						●	
PREMIUM LIGHT	PREMIUM LIGHT	140	3	●	●					●	
PREMIUM LIGHT SC	PREMIUM LIGHT SC	140	3	●	●	●	●			●	
	PREMIUM LIGHT SC	160	3	●	●	●	●			●	
PREMIUM	**PREMIUM**	100	2	●	●		●	●		●	
	PREMIUM SC	140	3	●	●	●	●	●		●	
		190	3	●		●	●	●		●	
		250	6	●		●	●	●		●	
	PREMIUM SC-2INN	190	3	●		●	●	●	●	●	
	PREMIUM SC-4INN	190	3	●		●	●	●	●	●	

APPLICATION EXAMPLES

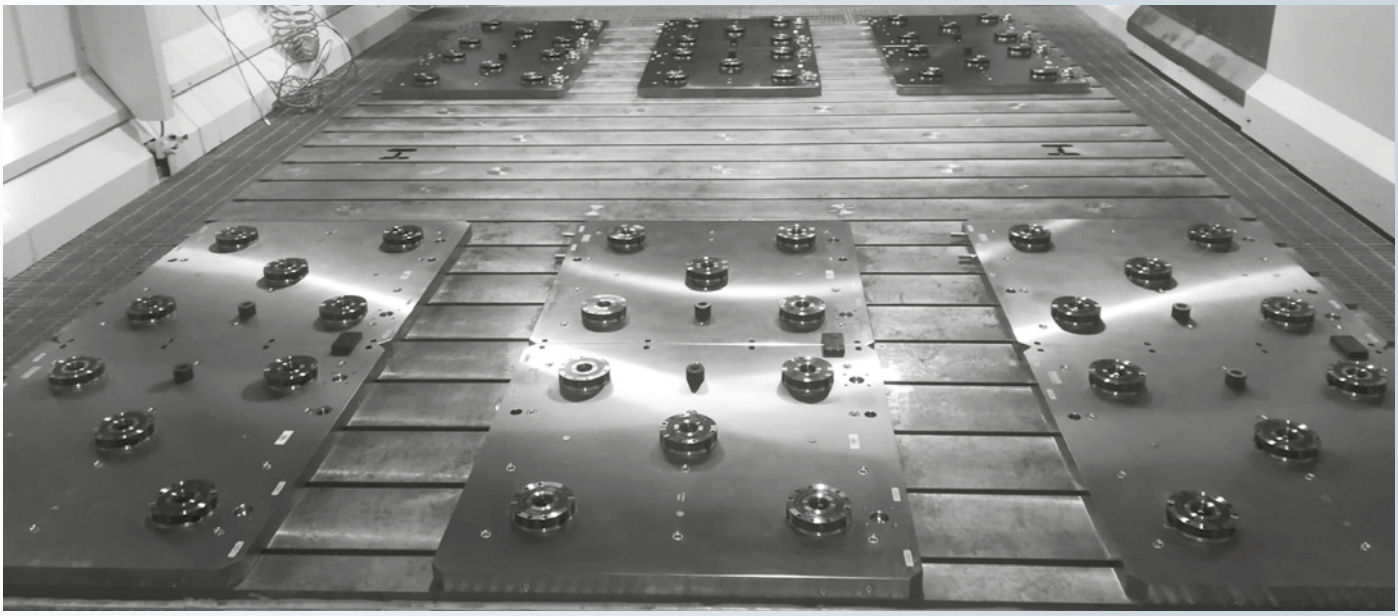

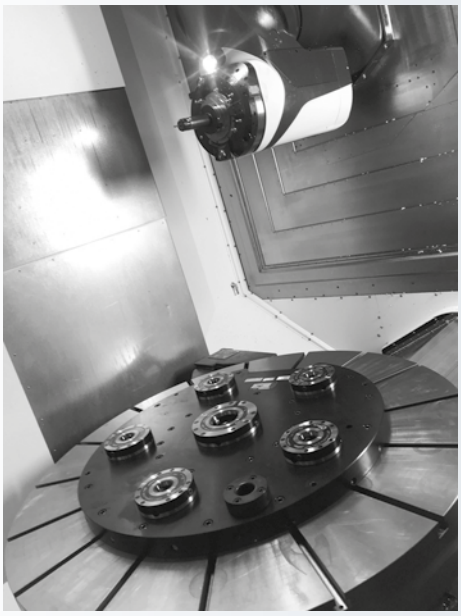

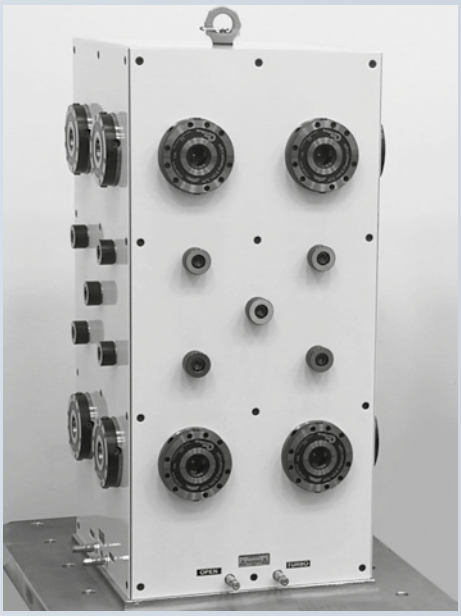

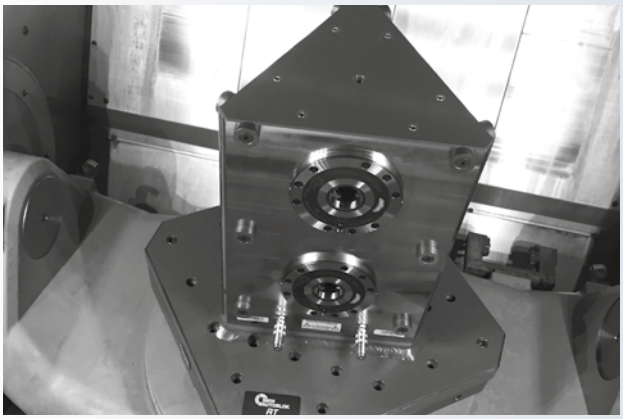

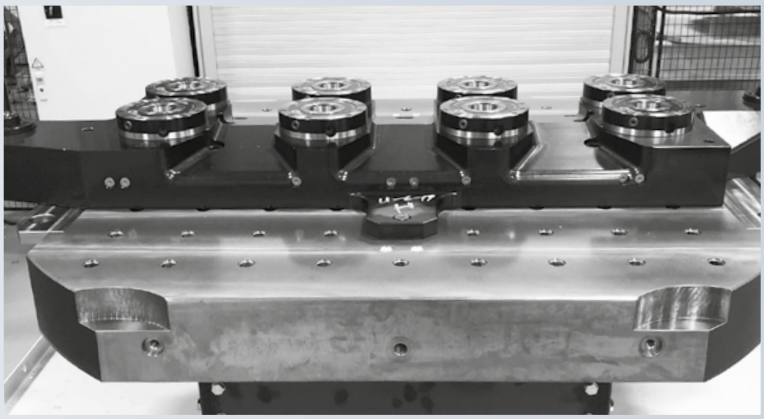

APS
ZERO POINT CLAMPING SYSTEM

Clamping Pins

A: Centering Pin

- Type A is used for centering and clamping.

B: Reference Pin

- Type B is used for reference and clamping.

C: Pull-down Pin
± 0.05 mm

- Type C is only used for clamping.

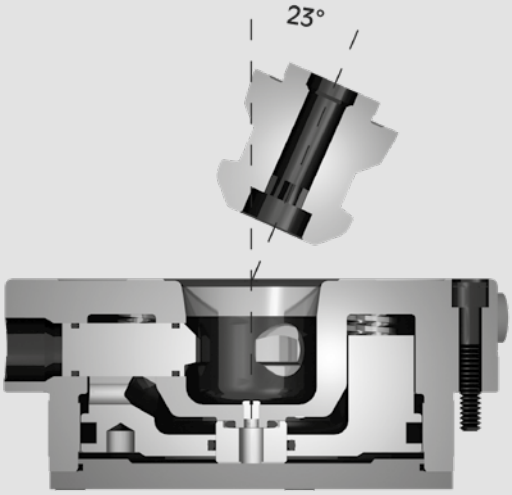

- Large entry radii of the clamping pins ensure easy and safe loading.

Holding Forces (kN) with screw DIN EN ISO 4762 - 12.9				
M6	**M8**	**M10**	**M12**	**M16**
15	25	35	50	75

Tightening torque for pins mounting bolts

Bolts	Nm
M6	13
M8	35
M10	60
M12	110
M16	200

APS
ZERO POINT CLAMPING SYSTEM

Positions of the clamping pins

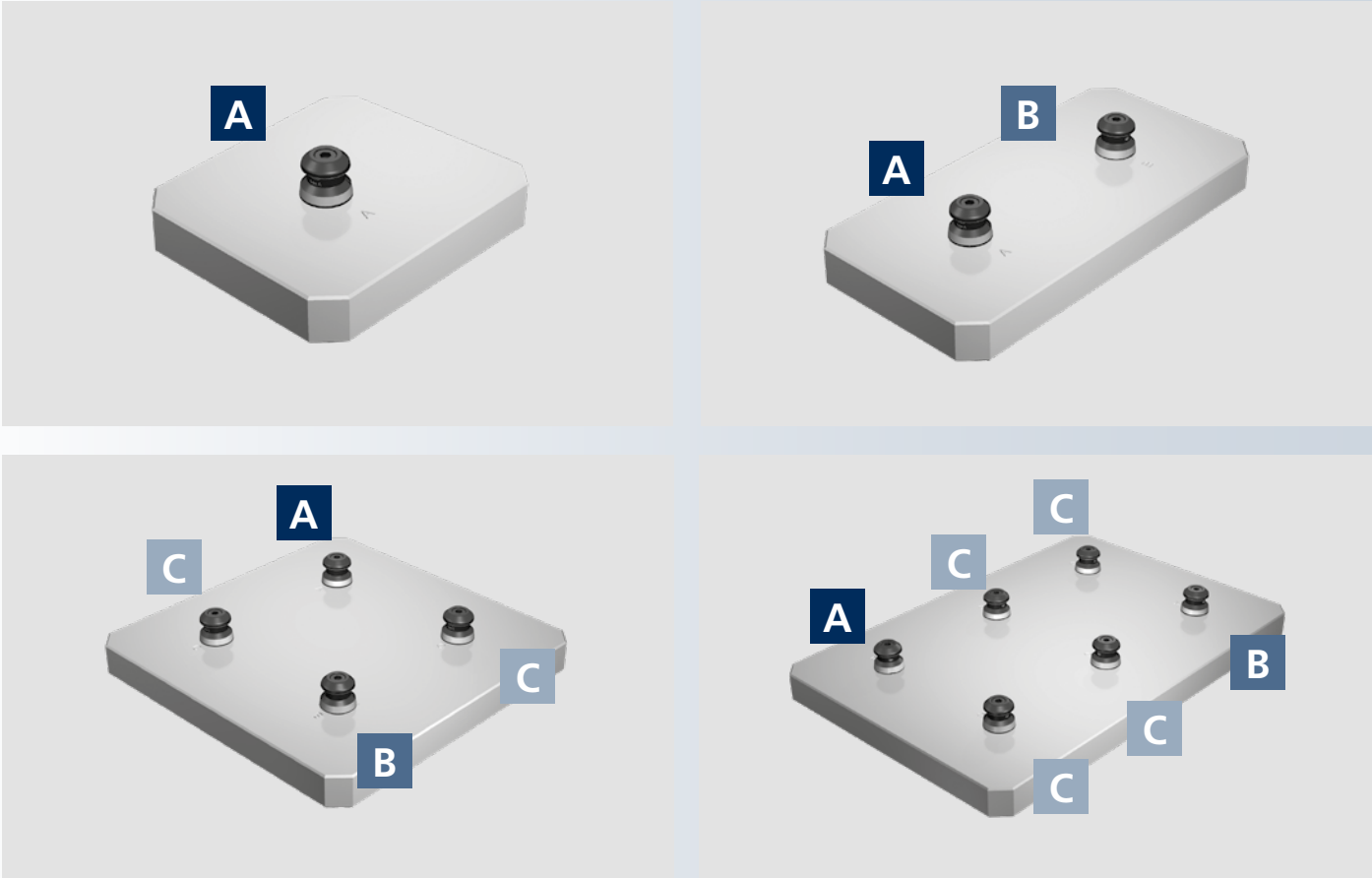

Positioning of the Reference Pin Type B

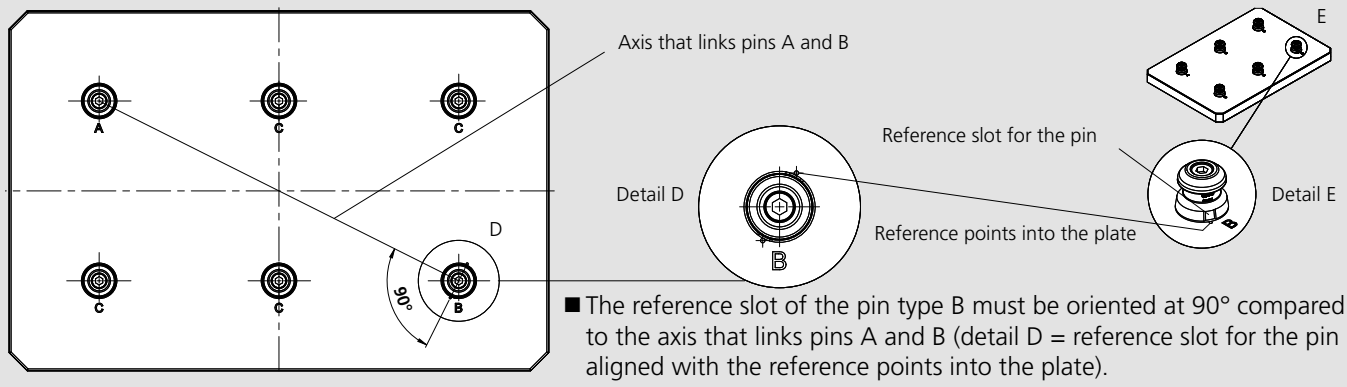

- The reference slot of the pin type B must be oriented at 90° compared to the axis that links pins A and B (detail D = reference slot for the pin aligned with the reference points into the plate).

APS 100-E

BASIC
Zero point clamping module

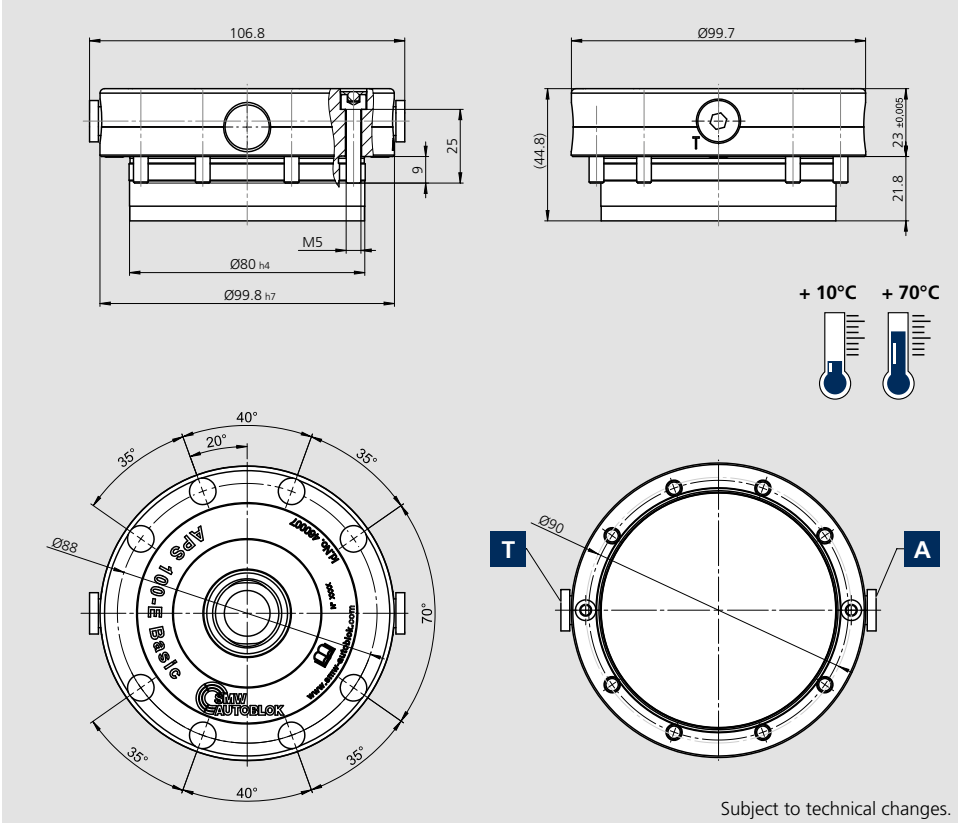

Technical features
- 2 clamping slides
- Turbo function **T**
  to increase the pull-down force

A = Open

Subject to technical changes.

Type	Id. No.	Pull-down force	Holding force*	Unlocking pressure	Repeatability	Weight
APS 100-E BASIC	460007	4 / 15**KN	13(M6)*** 25(M8) kN	6 bar	< 0,005 mm	1.9 kg

* With screws DIN EN ISO 4762 - 12.9 / ** With "Turbo effect" / *** Screws EN-ISO10642

APS 100-E

PREMIUM
Zero point clamping module

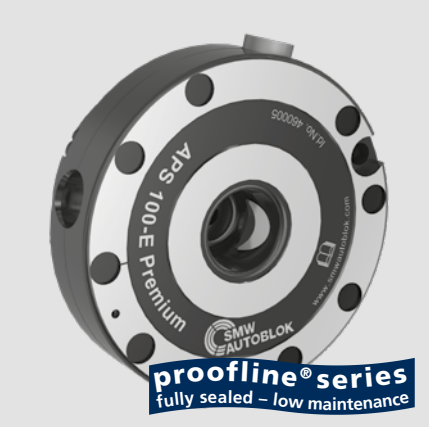

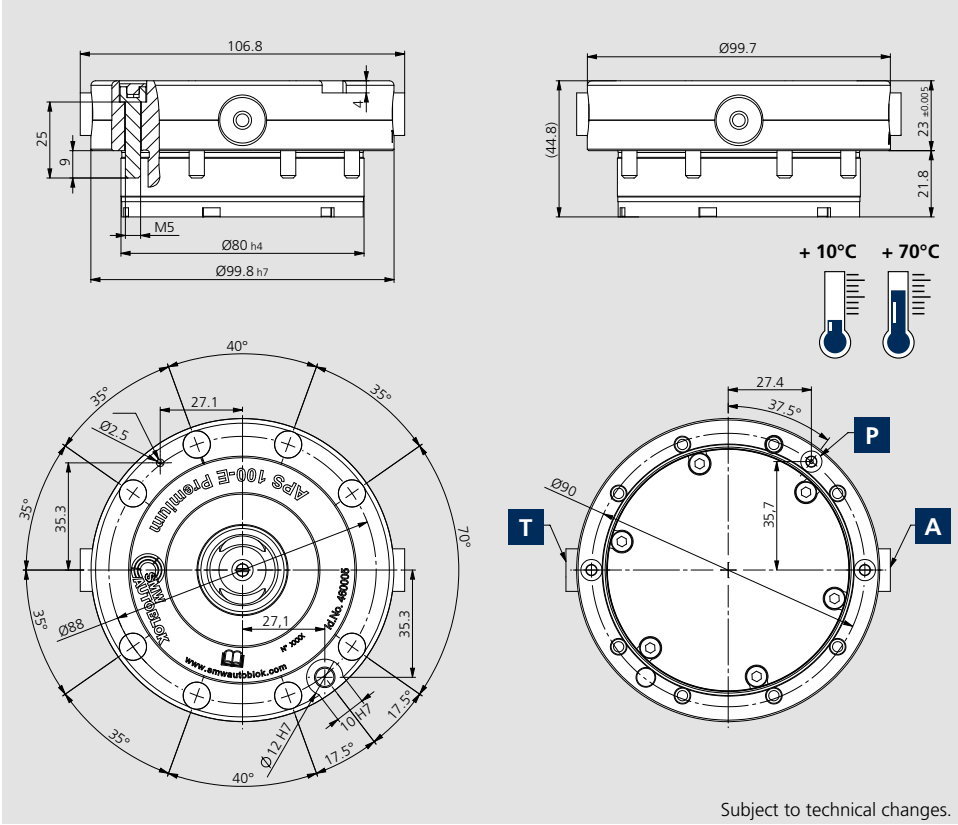

Technical features
- 2 clamping slides
- Turbo function **T**
  to increase the pull-down force
- Anti-rotation key seat
- Air sensing **P**
- Air cleaning

A = Open

Subject to technical changes.

Type	Id. No.	Pull-down force	Holding force*	Unlocking pressure	Repeatability	Weight
APS 100-E PREMIUM	460005	4 / 15**KN	13(M6)*** 25(M8) kN	6 bar	< 0,005 mm	1.9 kg

* With screws DIN EN ISO 4762 - 12.9 / ** With "Turbo effect" / *** Screws EN-ISO10642

BASIC
Zero point clamping module

APS 140-E

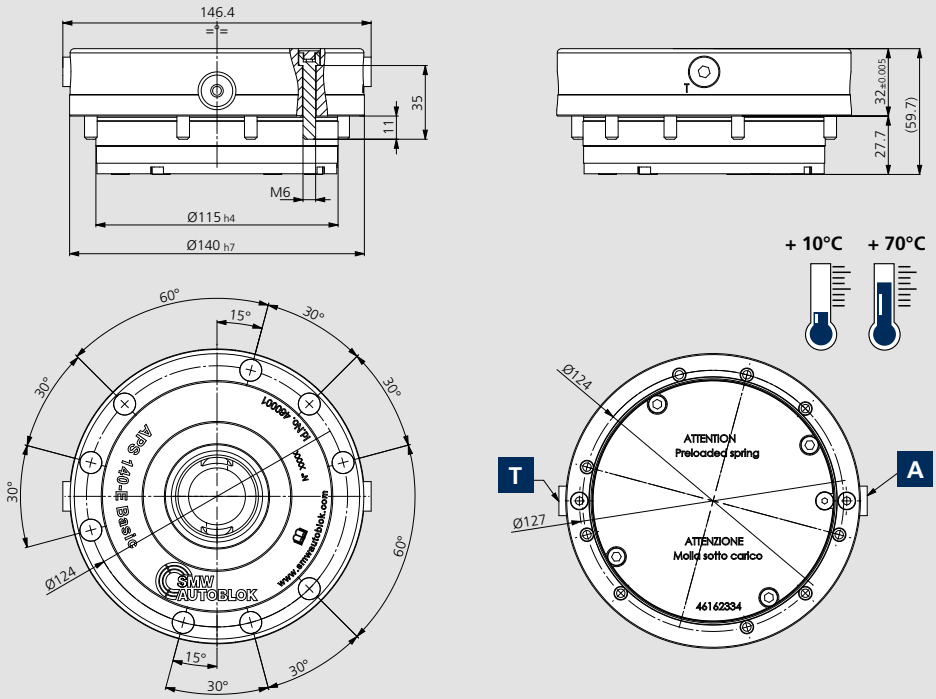

Technical features

- 2 clamping slides
- Turbo function **T**
  to increase the pull-down force

A = Open

Subject to technical changes.

Type	Id. No.	Pull-down force	Holding force*	Unlocking pressure	Repeatability	Weight
APS 140-E BASIC	460001	7.5 / 26**KN	35(M10) 50(M12) 75(M16) kN	6 bar	< 0,005 mm	4.5 kg

* With screws DIN EN ISO 4762 - 12.9 / ** With "Turbo effect"

PREMIUM LIGHT
Zero point clamping module

APS 140-E

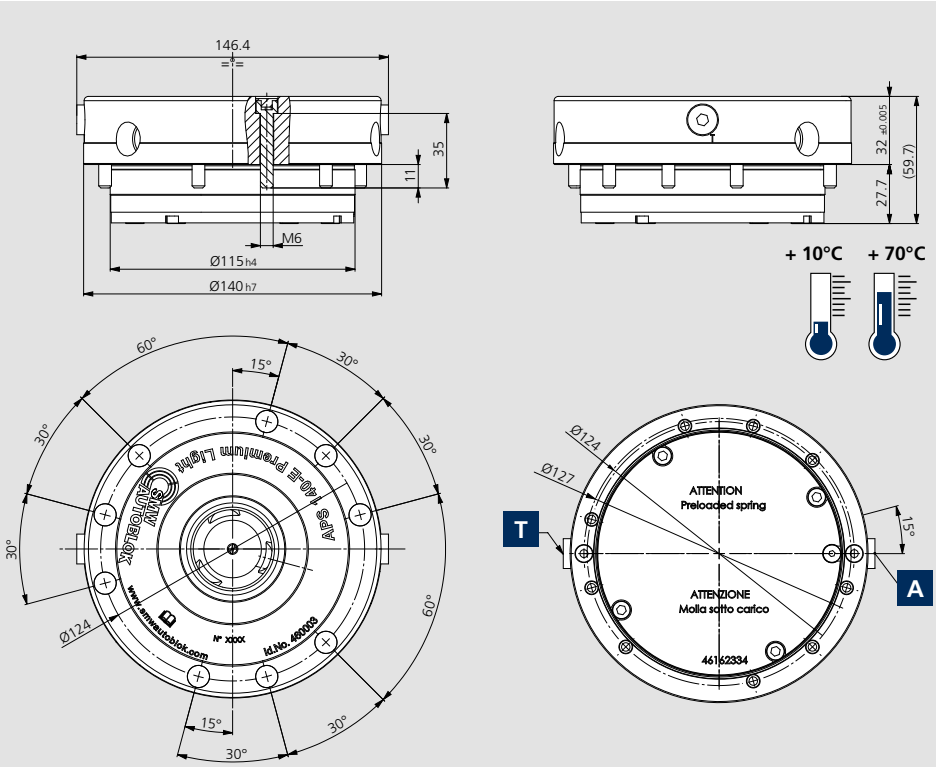

Technical features

- 3 clamping slides
- Turbo function **T**
  to increase the pull-down force
- Air cleaning

A = Open

Subject to technical changes.

Type	Id. No.	Pull-down force	Holding force*	Unlocking pressure	Repeatability	Weight
APS 140-E PREMIUM LIGHT	460003	7.5 / 26**KN	35(M10) 50(M12) 75(M16) kN	6 bar	< 0,005 mm	4.5 kg

* With screws DIN EN ISO 4762 - 12.9 / ** With "Turbo effect"

APS 140-E

PREMIUM LIGHT SC

Zero point clamping module

Technical features

- 3 Clamping slides
- Turbo function T
  to increase the pull-down force
- Pneumatic stroke control SC
- Air sensing P
- Air cleaning

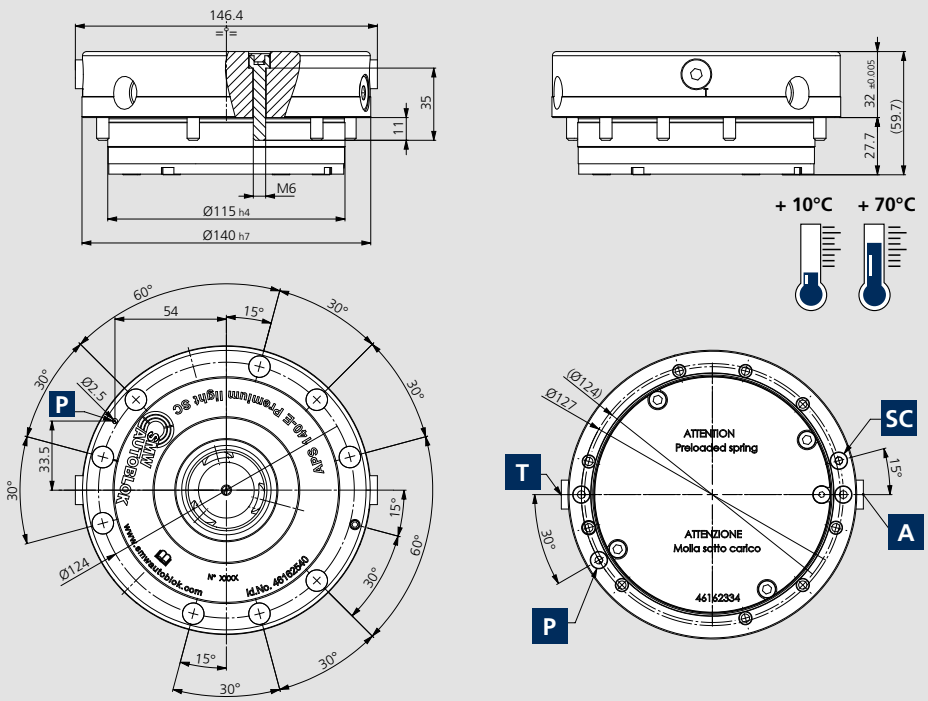

A = Open

Subject to technical changes.

Type	Id. No.	Pull-down force	Holding force*	Unlocking pressure	Repeatability	Weight
APS 140-E PREMIUM LIGHT SC	46162540	7.5 / 26**KN	35(M10) 50(M12) 75(M16) kN	6 bar	< 0,005 mm	4.5 kg

* With screws DIN EN ISO 4762 - 12.9 / ** With "Turbo effect"

APS 140-E

PREMIUM SC

Zero point clamping module

Technical features

- 3 Clamping slides
- Turbo function T
  to increase the pull-down force
- Pneumatic stroke control SC
- Air sensing P
- Air cleaning
- Anti-rotation key seat

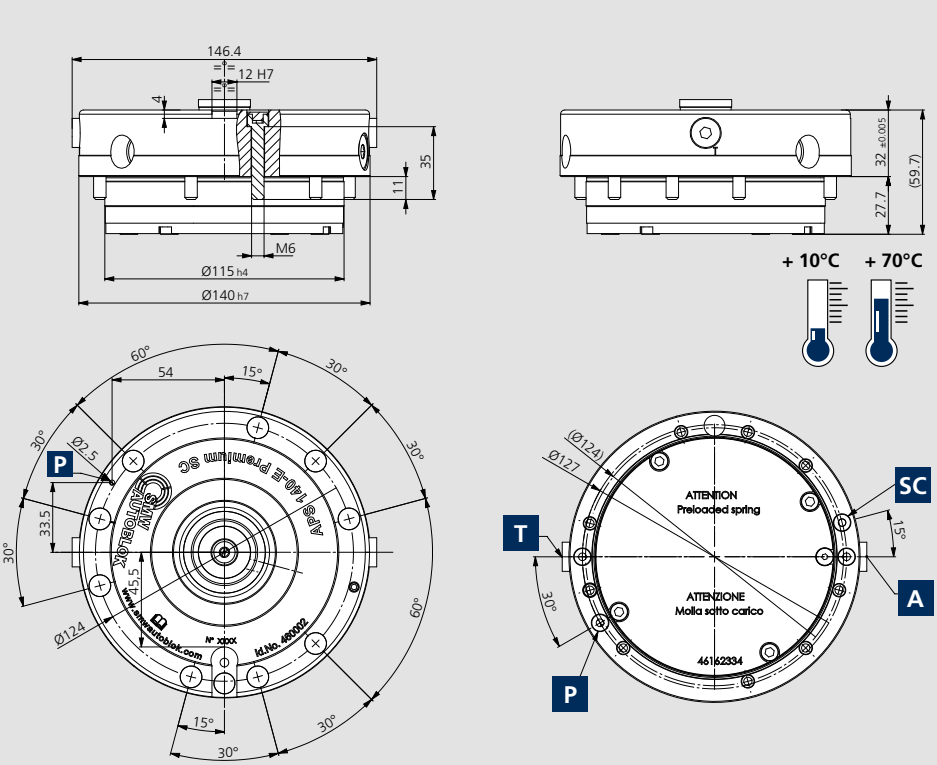

A = Open

Subject to technical changes.

Type	Id. No.	Pull-down force	Holding force*	Unlocking pressure	Repeatability	Weight
APS 140-E PREMIUM SC	460002	7.5 / 26**KN	35(M10) 50(M12) 75(M16) kN	6 bar	< 0,005 mm	4.5 kg

* With screws DIN EN ISO 4762 - 12.9 / ** With "Turbo effect"

APPLICATION EXAMPLES

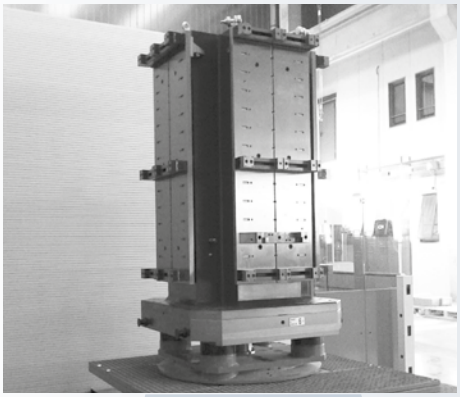

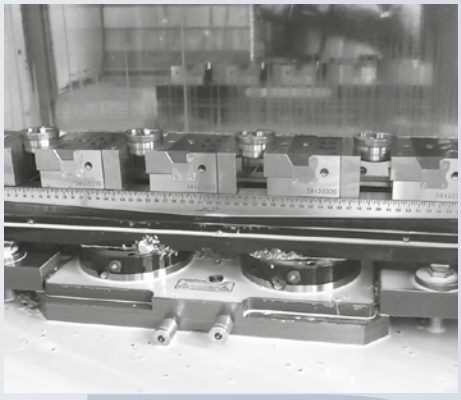

APS

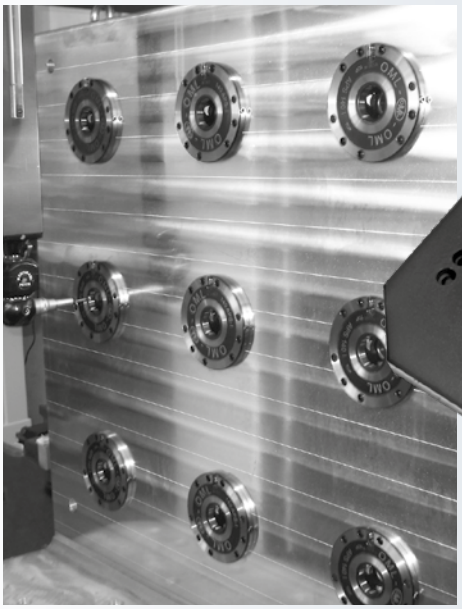

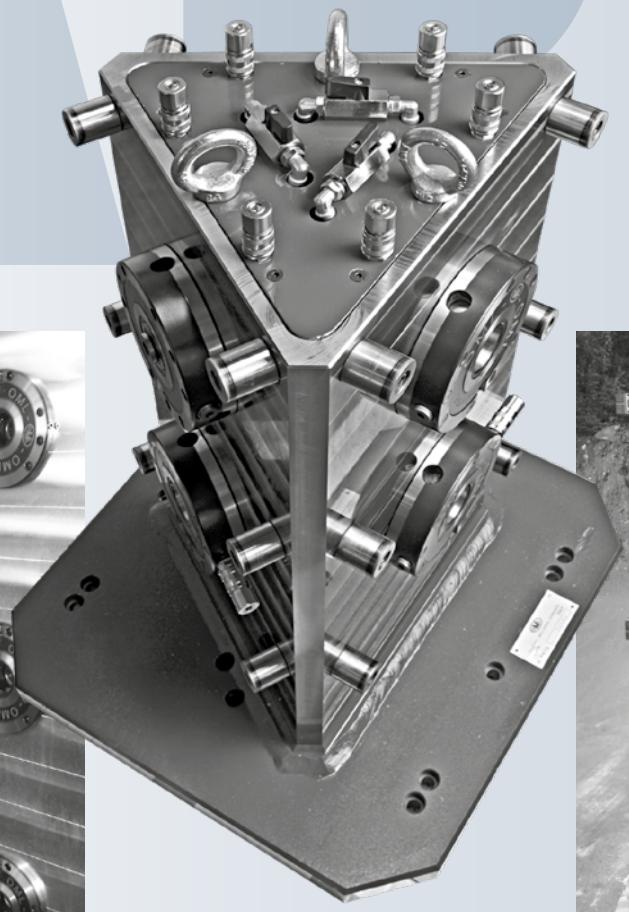

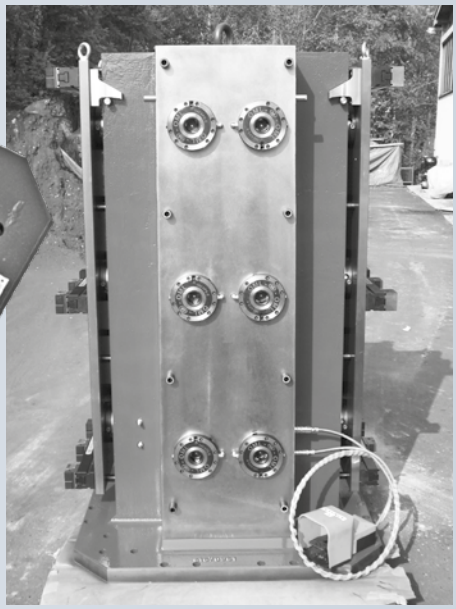

APS 140-I

PREMIUM LIGHT
Zero point clamping module

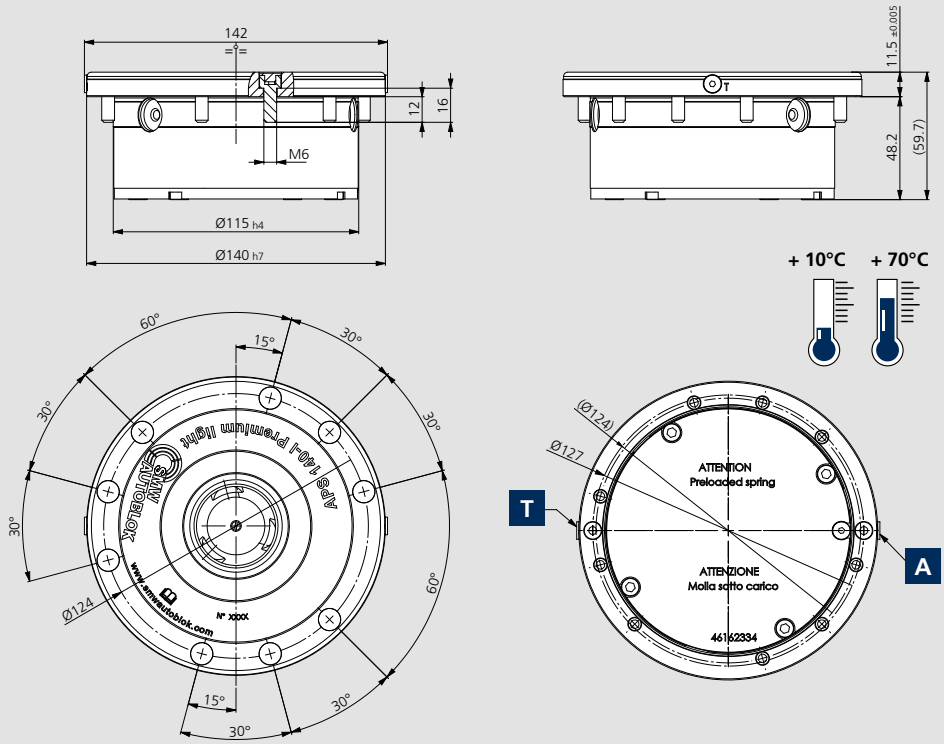

Technical features
- 3 clamping slides
- Turbo function **T**
  to increase the pull-down force
- Air cleaning

A = Open

Subject to technical changes.

Type	Id. No.	Pull-down force	Holding force*	Unlocking pressure	Repeatability	Weight
APS 140-I PREMIUM LIGHT	46162480	7.5 / 26**KN	35(M10) 50(M12) 75(M16) kN	6 bar	< 0,005 mm	4.5 kg

* With screws DIN EN ISO 4762 - 12.9 / ** With "Turbo effect"

APS 160-E

PREMIUM LIGHT SC
Zero point clamping module

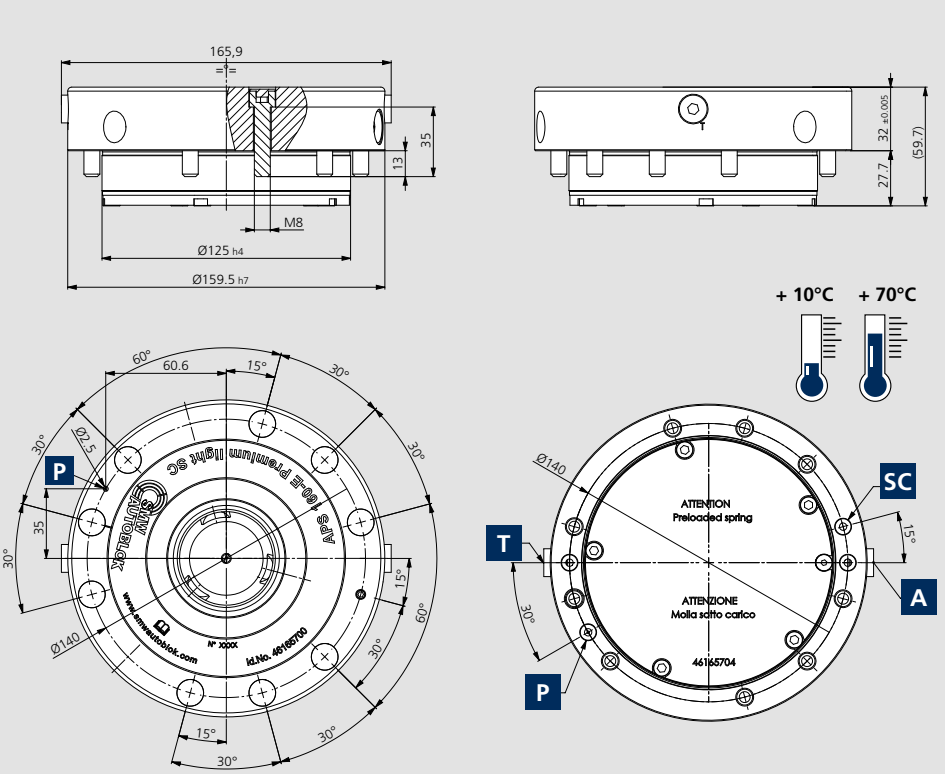

Technical features
- 3 Clamping slides
- Turbo function **T**
  to increase the pull-down force
- Air sensing **P**
- Air cleaning
- Pneumatic stroke control **SC**

A = Open

Subject to technical changes.

Type	Id. No.	Pull-down force	Holding force*	Unlocking pressure	Repeatability	Weight
APS 160-E PREMIUM LIGHT SC	46165700	9 / 30**KN	50(M12) 75(M16) kN	6 bar	< 0,005 mm	5.9 kg

* With screws DIN EN ISO 4762 - 12.9 / ** With "Turbo effect"

PREMIUM SC
Zero point clamping module

APS 190-E

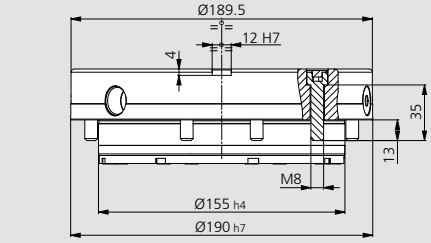

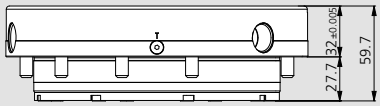

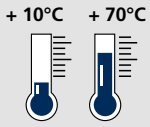

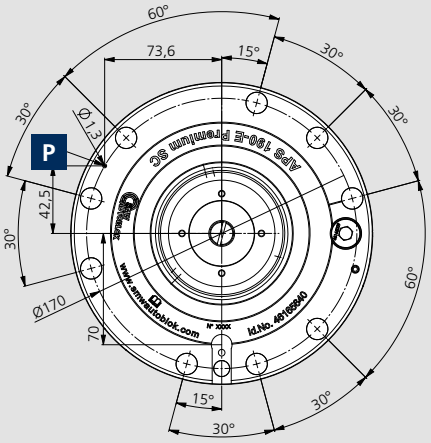

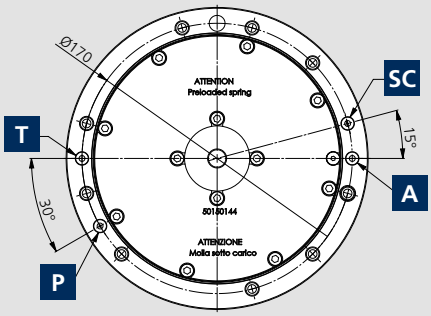

Technical features

- 3 clamping slides
- Turbo function **T**
  to increase the pull-down force
- Anti-rotation key seat
- Air sensing **P**
- Pneumatic stroke control **SC**

A = Open

Subject to technical changes.

Type	Id. No.	Pull-down force	Holding force*	Unlocking pressure	Repeatability	Weight
APS 190-E PREMIUM SC	46165640	13.5 / 45**KN	50(M12) 75(M16) 80(6xM6) 150(6xM8) kN	6 bar	< 0,005 mm	6.9 kg

* With screws DIN EN ISO 4762 - 12.9 / ** With "turbo effect"

PREMIUM SC 2-INN
Zero point clamping module

APS 190-E

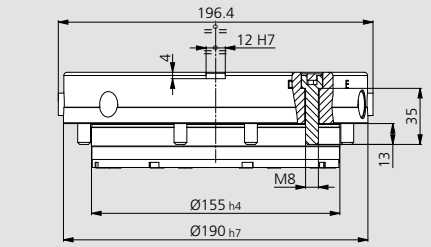

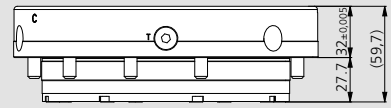

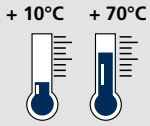

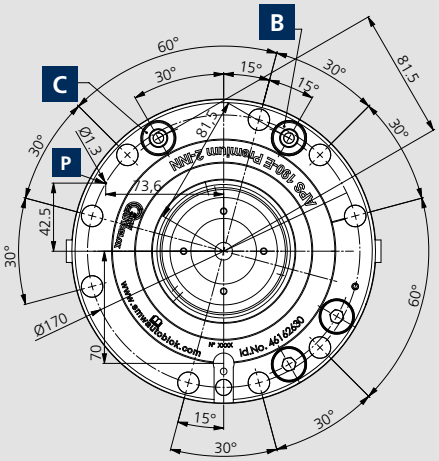

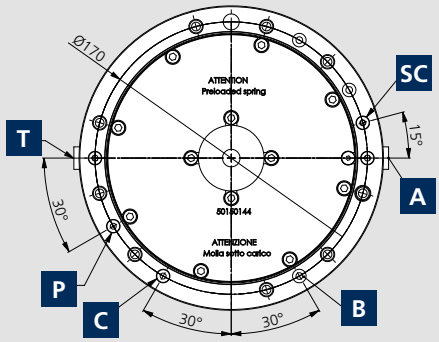

Technical features

- 3 Clamping slides
- Turbo function **T**
  to increase the pull-down force
- Anti-rotation key seat
- Air sensing **P**
- Pneumatic stroke control **SC**
- N.2 pneumatic / hydraulic feedings
  B **C**

A = Open

Subject to technical changes.

Type	Id. No.	Pull-down force	Holding force*	Unlocking pressure	Repeatability	Weight
APS 190-E PREMIUM SC 2-INN	46162630	13.5 / 45**KN	50(M12) 75(M16) 80(6xM6) 150(6xM8) kN	6 bar	< 0,005 mm	6.9 kg

* With screws DIN EN ISO 4762 - 12.9 / ** With "Turbo effect"

APS 190-E

PREMIUM SC 4-INN
Zero point clamping module

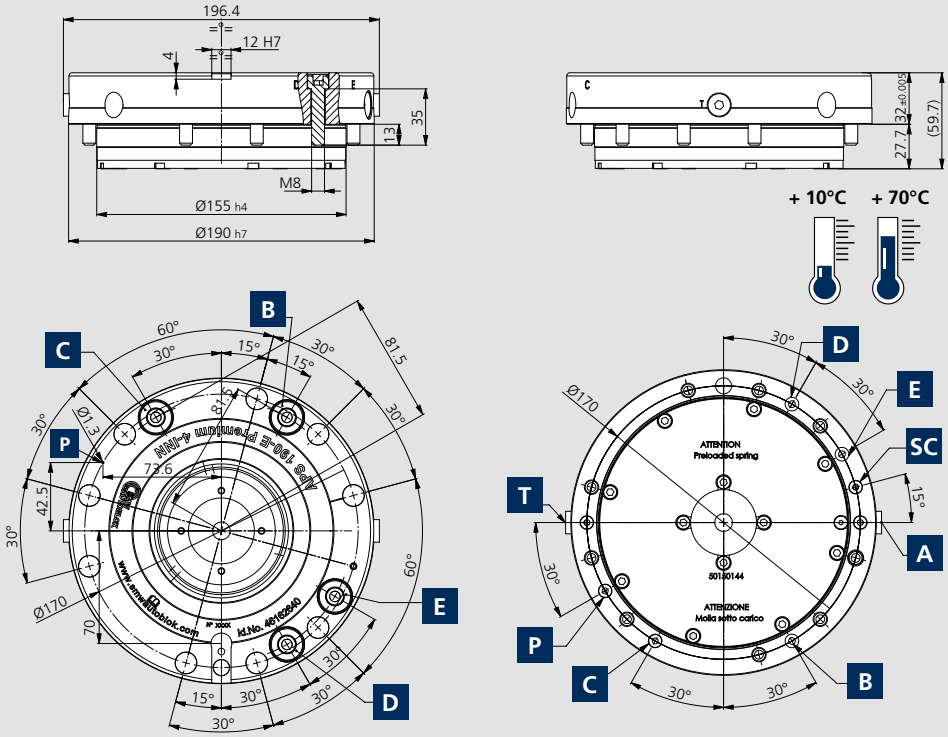

Technical features
- 3 clamping slides
- Turbo function **T** to increase the pull-down force
- Anti-rotation key seat
- Air sensing **P**
- Pneumatic stroke control **SC**
- N.4 pneumatic / hydraulic feedings **B** **C** **D** **E**

See page 46

A = Open

Subject to technical changes.

Type	Id. No.	Pull-down force	Holding force*	Unlocking pressure	Repeatability	Weight
APS 190-E PREMIUM SC 4-INN	46162640	13.5 / 45**KN	50(M12) 75(M16) 80(6xM6) 150(6xM8) kN	6 bar	< 0,005 mm	6.9 kg

* With screws DIN EN ISO 4762 - 12.9 / ** With "Turbo effect"

APS 250-E

PREMIUM SC
Zero point clamping module

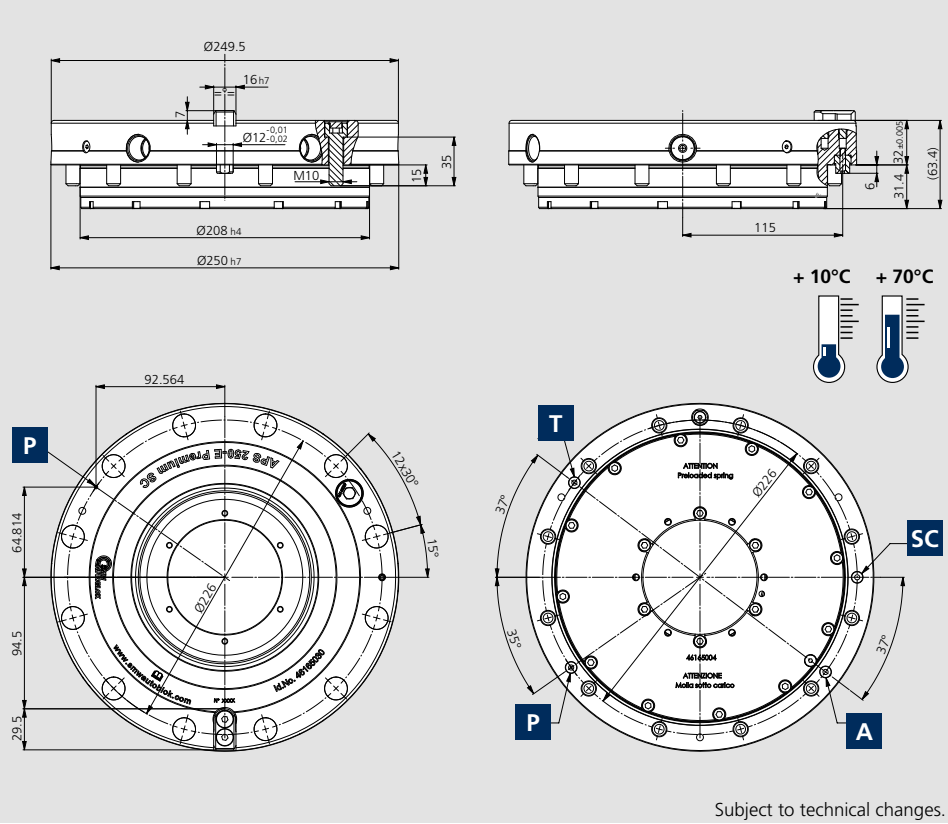

Technical features
- 6 clamping slides
- Turbo function **T** to increase the pull-down force
- Anti-rotation key seat
- Air sensing **P**
- Pneumatic stroke control **SC**

A = Open

Subject to technical changes.

Type	Id. No.	Pull-down force	Holding force*	Unlocking pressure	Repeatability	Weight
APS 250-E PREMIUM SC	46165030	18 / 55**KN	300(6xM12) 210(6xM10) 375(15xM8) kN	6 bar	< 0,005 mm	15 kg

* With screws DIN EN ISO 4762 - 12.9 / ** With "Turbo effect"

Pins

APS 100

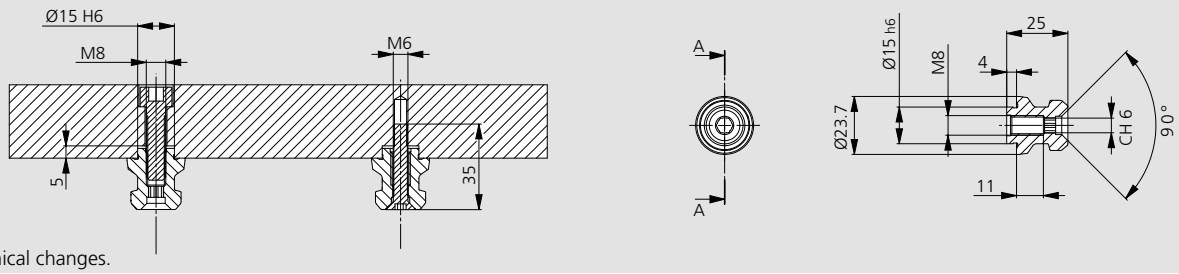

Subject to technical changes.

Id. No.	Type		Weight [kg]
46162155	A	M8	0.05
46162156	B	M8	0.05
46162157	C	M8	0.05

Pins - M12 thread

APS 140

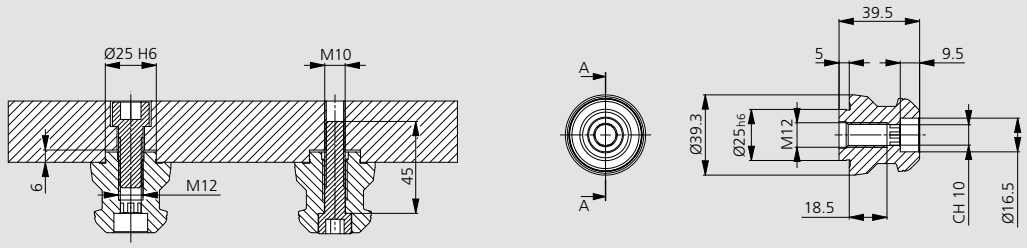

Subject to technical changes.

Id. No.	Type		Weight [kg]
46162355	A	M12	0.2
46162356	B	M12	0.2
46162357	C	M12	0.2

Pins - M16 thread

APS 140

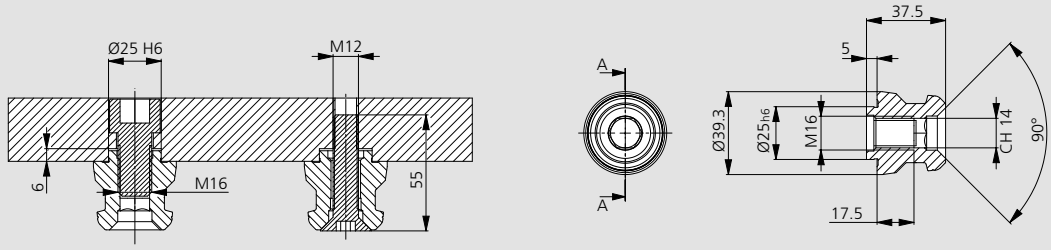

Subject to technical changes.

Id. No.	Type		Weight [kg]
46162455	A	M16	0.2
46162456	B	M16	0.2
46162457	C	M16	0.2

Pins type C floating

APS 140

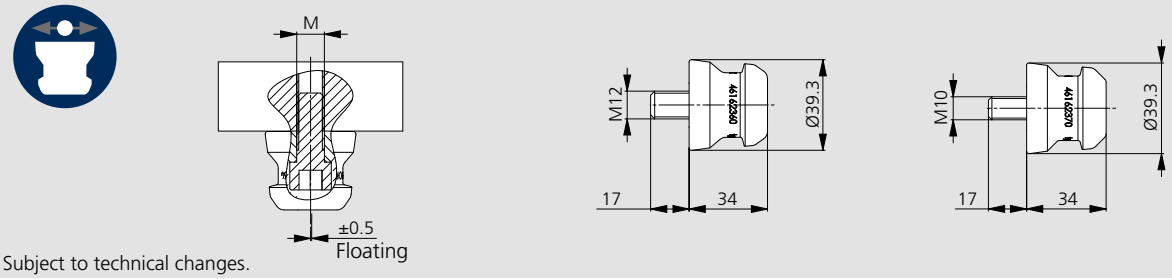

Subject to technical changes.

Id. No.	Type		Weight [kg]
46162370	C - Floating ± 0.5 mm	M10	0.2
46162360	C - Floating ± 0.5 mm	M12	0.2

APS 160 | Pins - M16 thread

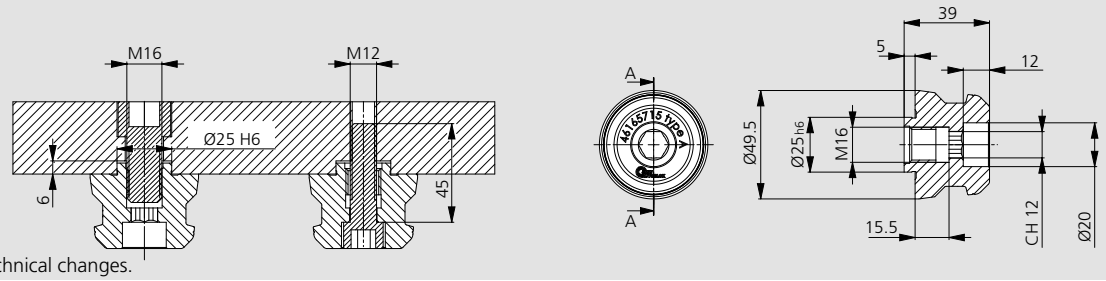

Subject to technical changes.

Id. No.	Type		Weight [kg]
46165715	A	M16	0.35
46165716	B	M16	0.35
46165717	C	M16	0.35

APS 160 | Pins - D17 (for M16 screws 12.9)

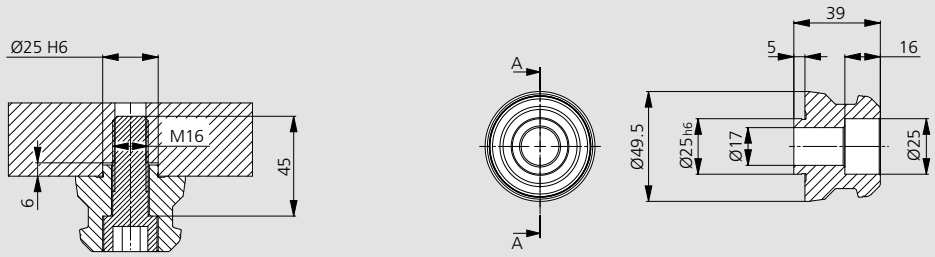

Subject to technical changes.

Id. No.	Type		Weight [kg]
46165705	A	D17	0.3
46165706	B	D17	0.3
46165707	C	D17	0.3

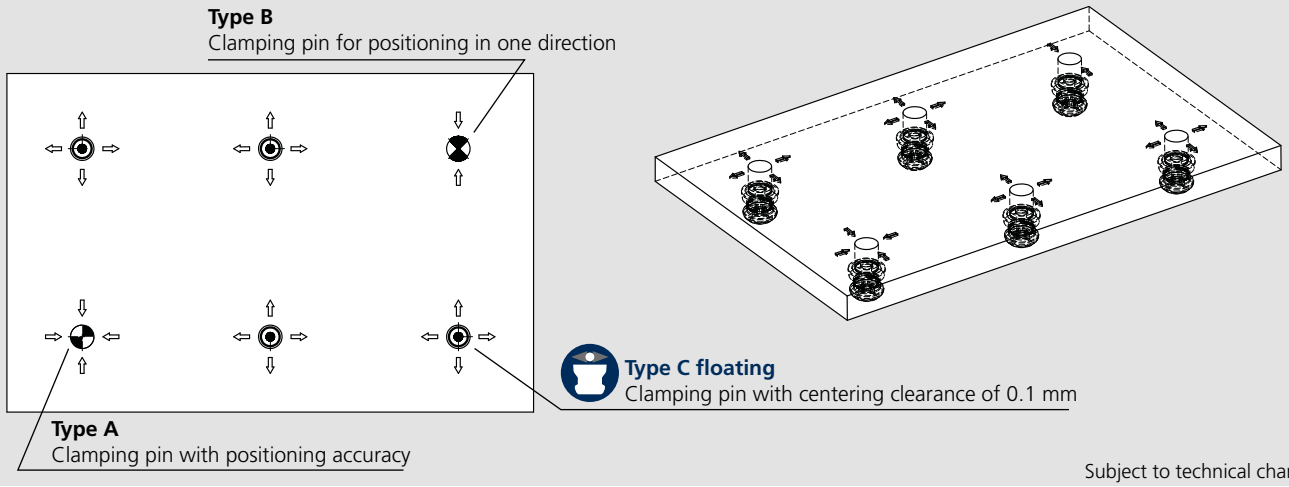

Subject to technical changes.

APS 160 | Pins type C floating

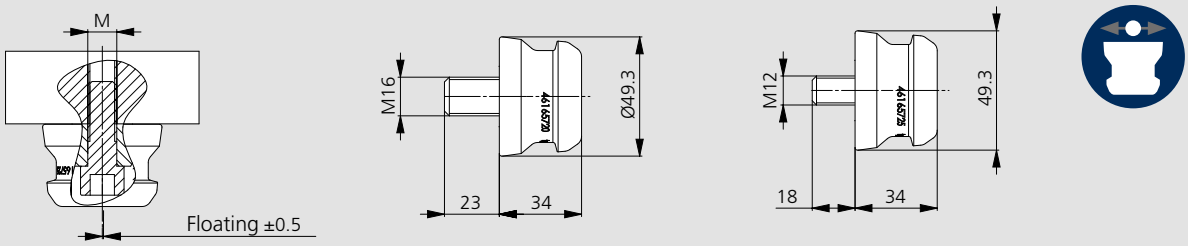

Subject to technical changes.

Id. No.	Type		Weight [kg]
46165720	C - Floating ± 0,5 mm	M16	0.4
46165725	C - Floating ± 0,5 mm	M12	0.35

APS 190 | Pins

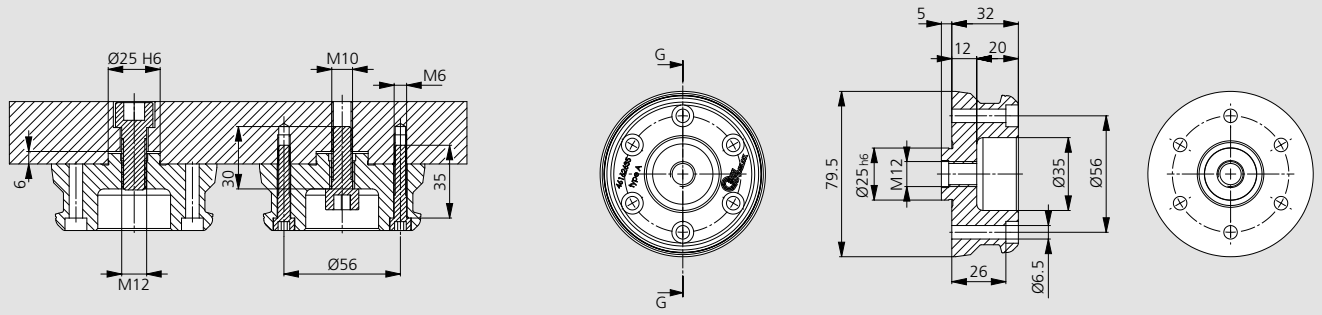

Subject to technical changes.

Id. No.	Type		Weight [kg]
46162635	A	Mounting pin = To the pin APS-140 M12	0.85

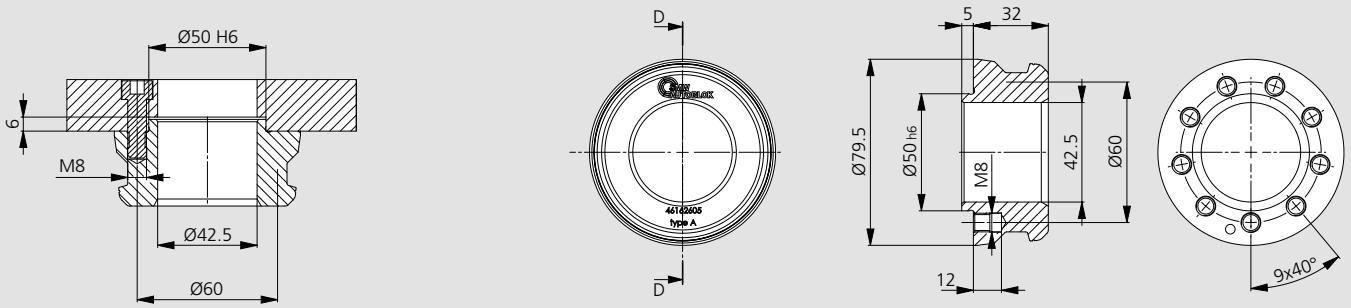

Subject to technical changes.

Id. No.	Type	Weight [kg]	Note
46162605	A	0.7	Pin with central hole Ø 42

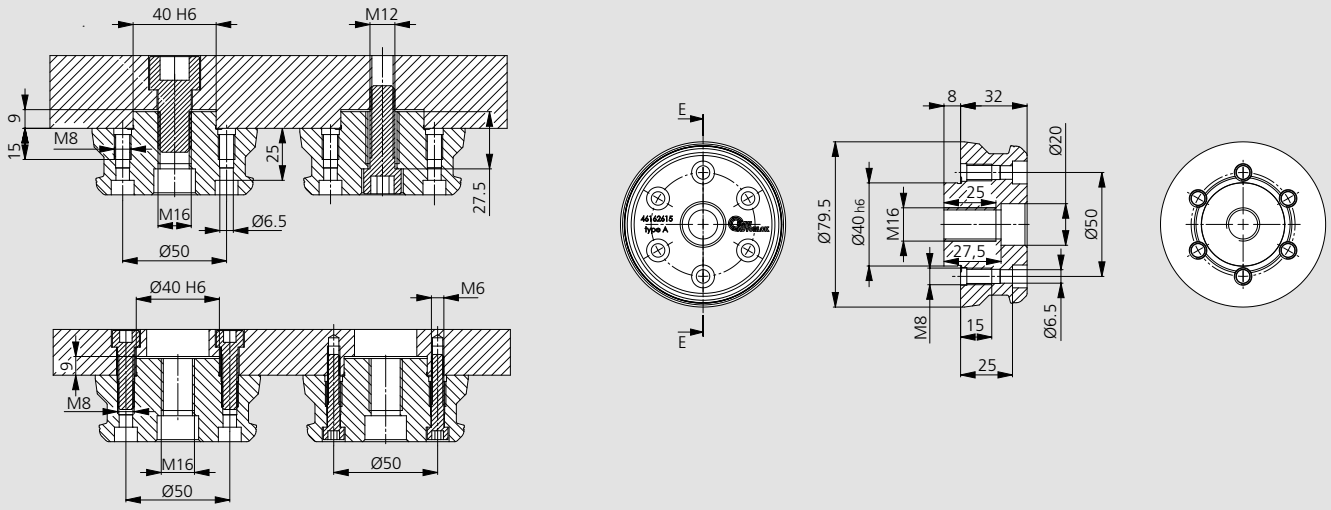

Subject to technical changes.

Id. No.	Type		Weight [kg]
46162615	A	M16	1
46162616	B	M16	1
46162617	C	M16	1

APS 190 Pins

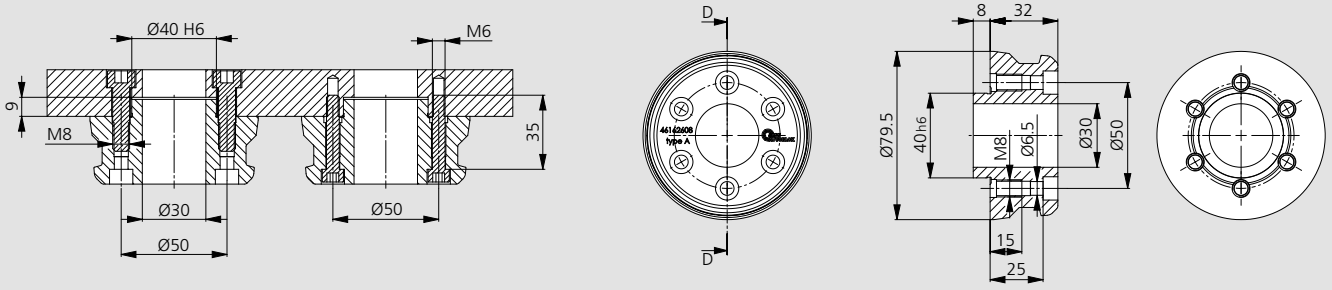

Subject to technical changes.

Id. No.	Type	Weight [kg]	Note
46162608	A	0.85	Pin with central hole Ø 30

APS 250 Pins

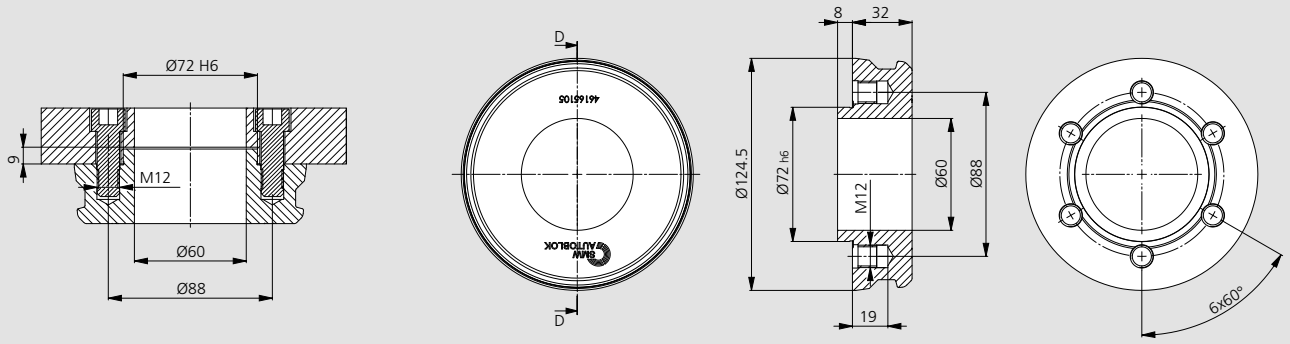

Subject to technical changes.

Id. No.	Type	Weight [kg]	Note
46165105	A	2	Pin with central hole Ø 60

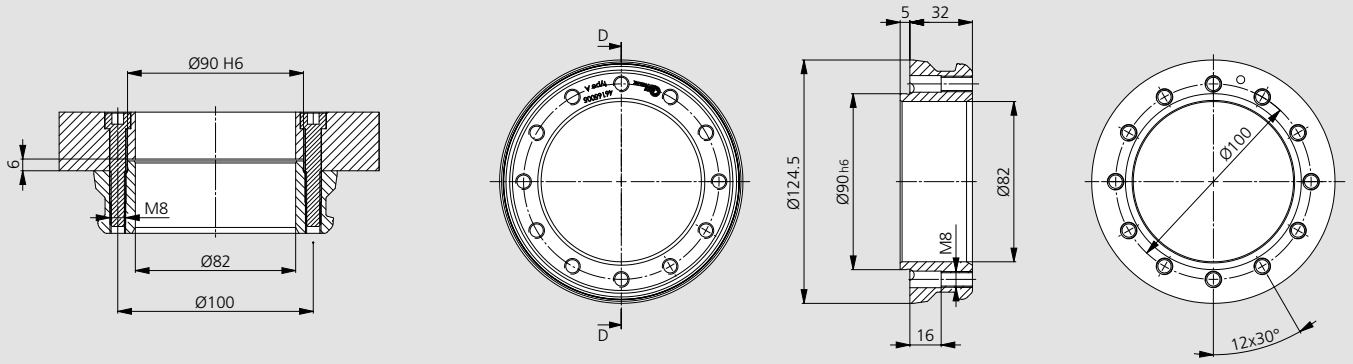

Subject to technical changes.

Id. No.	Type	Weight [kg]	Note
46165005	A	1.3	Pin with central hole Ø 82

APS

Clamping unit fully assembled ready for use

Industry 4.0 Product

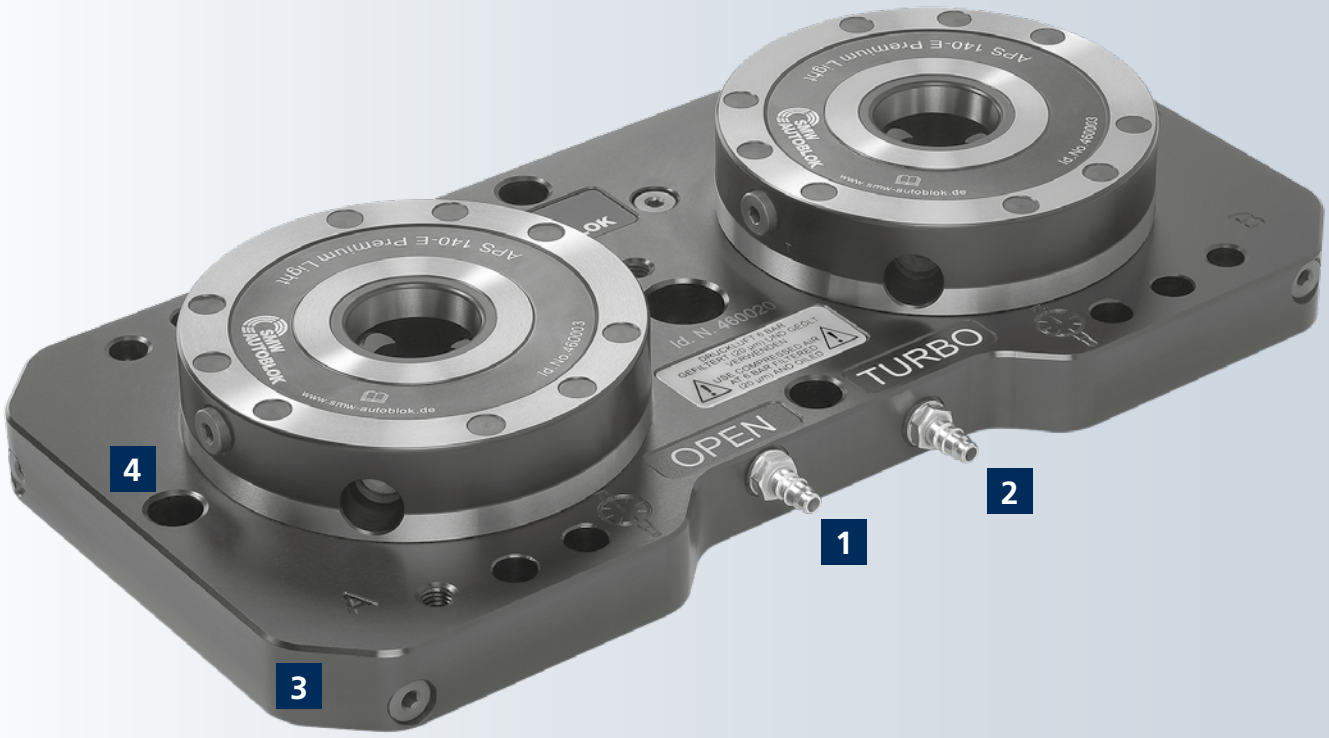

Functional Overview of the APS Clamping Units

1	Pneumatic connections 1/8“
2	Turbo function for highest pull-in forces
3	Solid base plate (height 28 mm) for maximum stiftness at a total height of only 60 mm
4	Easy mounting on the machine table due to positioning holes

Application Examples

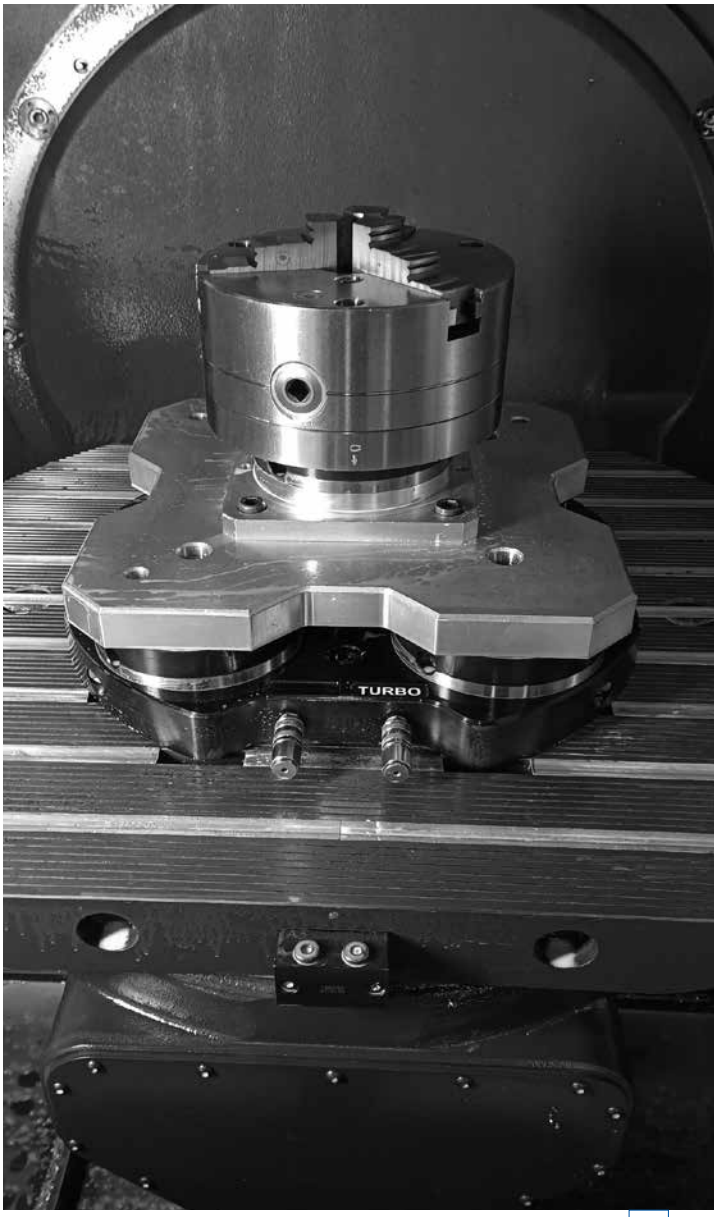

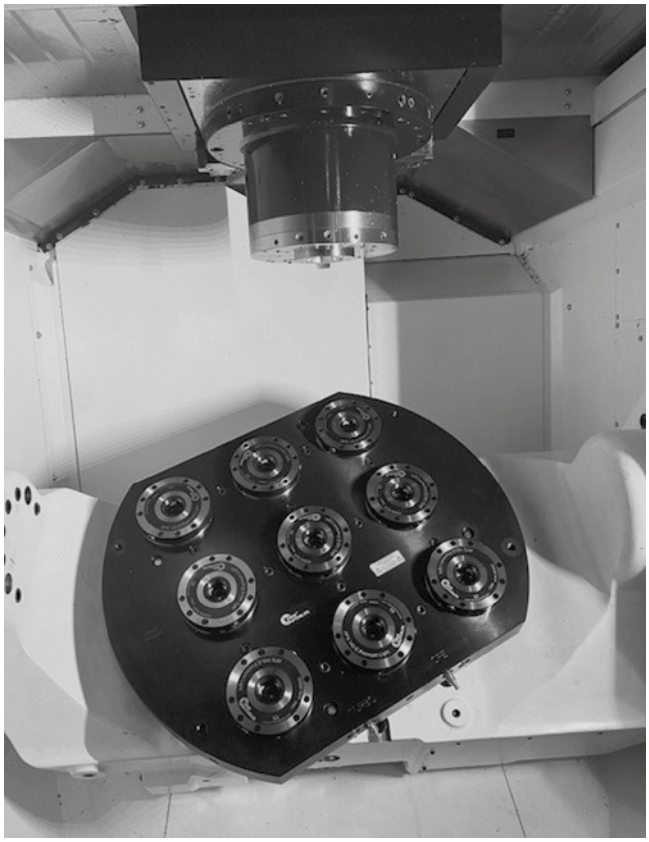

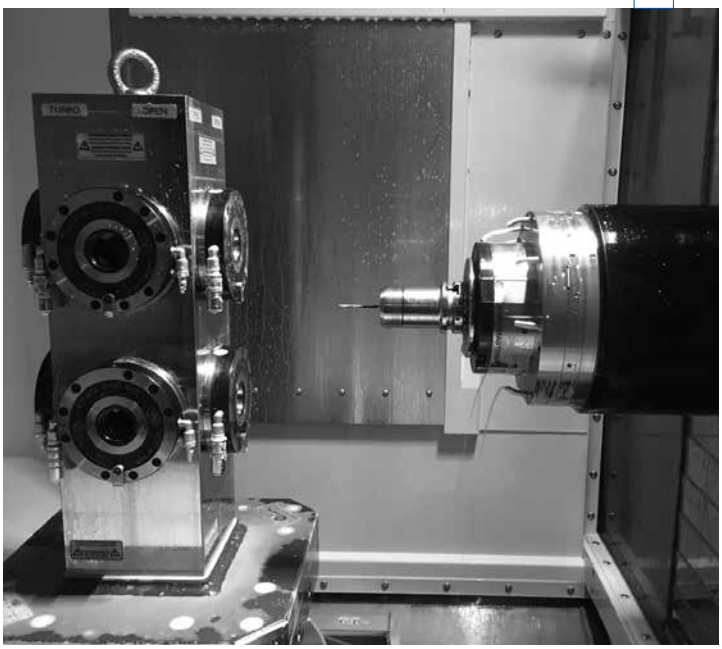

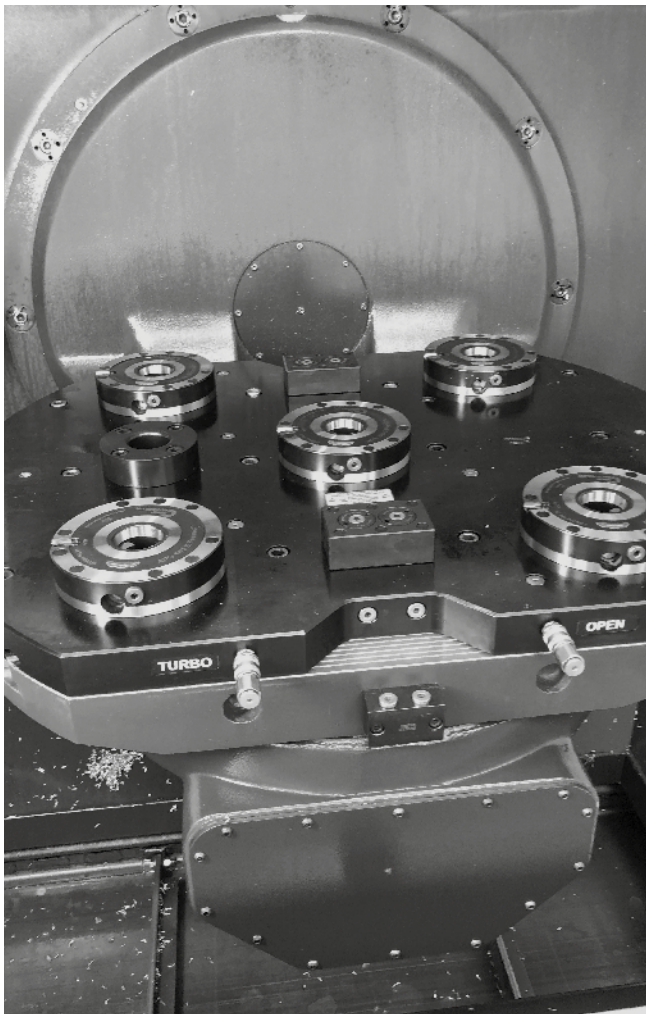

APS 140

Application/customer benefits

- Pre-assembled clamping unit with 2 pieces APS 140 Premium Light or Basic
- Universal applicable
- Fast and easy set-up

Technical features

- 3 clamping slides (Basic: 2 clamping slides)
- Repeatability < 0.005 mm
- Turbo function for increasing the pull-in forces (pull-in force without Turbo 7.5 kN)
- Air cleaning (only Premium Light)
- Interaxis 200 mm

Standard equipment

Clamping unit with 2 pieces APS 140 Premium Light or Basic
Quick pneumatic connections

For clamping pallets see next catalog pages

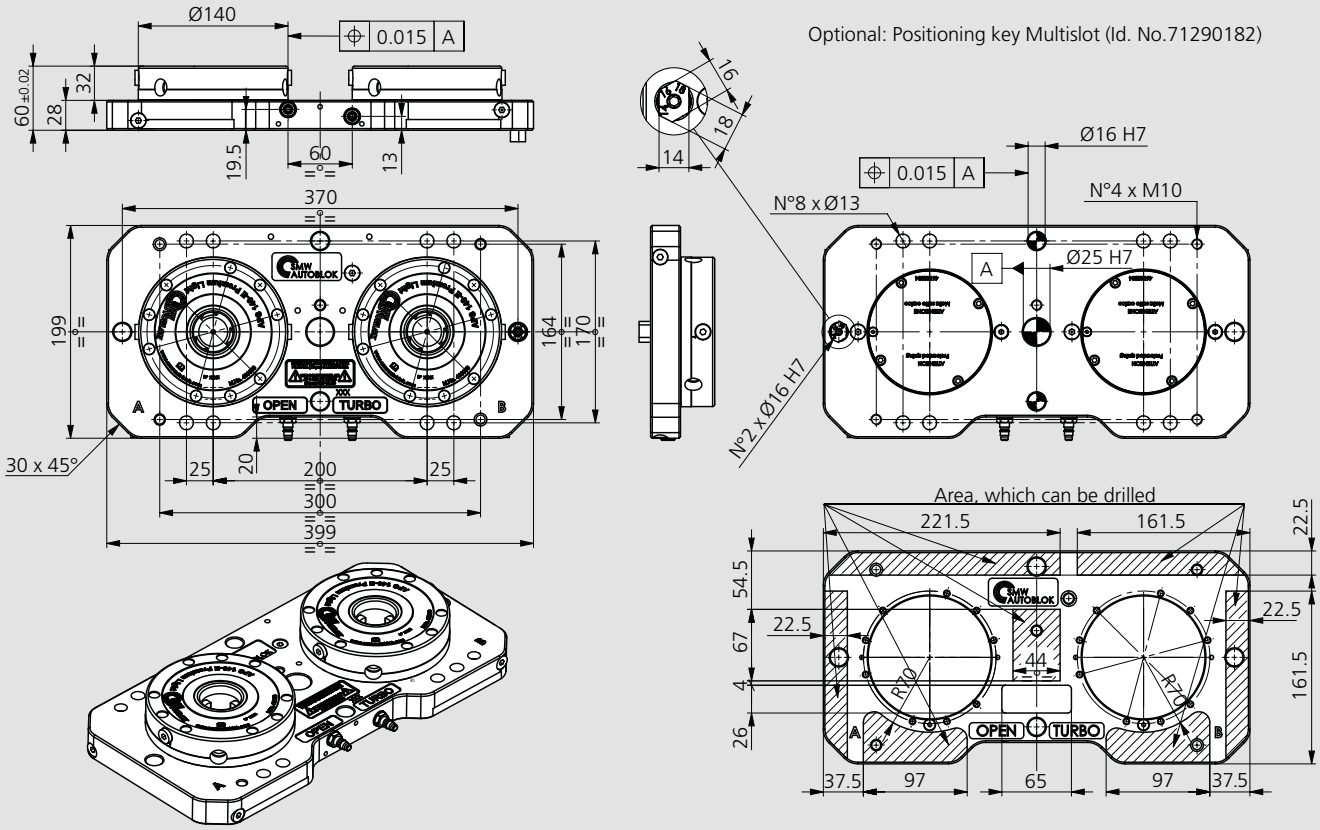

Subject to technical changes.

Type	Id. No.	Pull-in force with Turbo [kN]		Repeatability [mm]	Weight [kg]
Clamping unit with 2 APS 140-E Premium Light	460020	26*		< 0.005	21
Clamping unit with 2 APS 140-E Basic	460021	26*		< 0.005	21

* For each module.

APS 140

Clamping unit

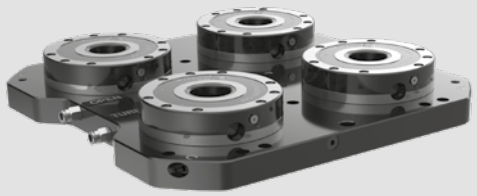

Application/customer benefits

- Pre-assembled clamping unit with 4 pieces APS 140 Premium Light or Basic
- Universal applicable
- Fast and easy set-up
- Suitable for vertical machines

Technical features

- 3 clamping slides (Basic: 2 clamping slides)
- Repeatability < 0.005 mm
- Turbo function for increasing the pull-in forces (pull-in force without Turbo 7.5 kN)
- Air cleaning (only Premium Light)
- Interaxis 200 mm

Standard equipment

Clamping unit with 4 pieces APS 140 Premium Light or Basic
Quick pneumatic connections

For clamping pallets see next catalog pages

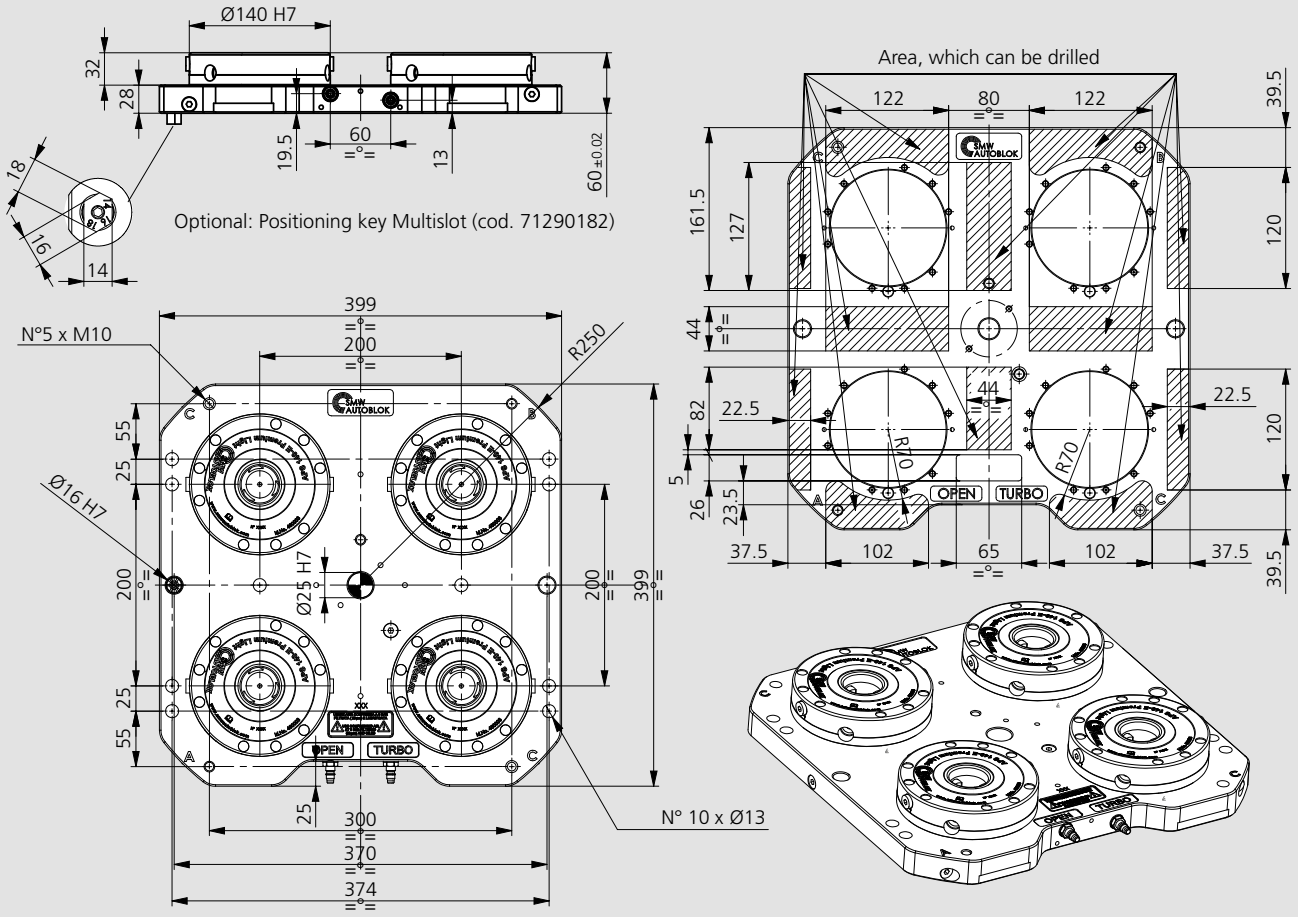

Subject to technical changes.

Type	Id. No.	Pull-in force with Turbo [kN]	Repeatability [mm]	Weight [kg]
Clamping unit with 4 APS 140-E Premium Light	460022	26*	< 0.005	41
Clamping unit with 4 APS 140-E Basic	460023	26*	< 0.005	41

* For each module.

Clamping unit

APS 140

■ Preferably for horizontal machining center

Application/customer benefits

- Pre-assembled clamping unit with 4 pieces APS 140 Premium Light or Basic
- Suitable for standard machine pallets type JIS 6337-1980
- Universal applicable
- Fast and easy set-up

Technical features

- 3 clamping slides (Basic: 2 clamping slides)
- Repeatability < 0.005 mm
- Turbo function for increasing the pull-in forces (pull-in force without Turbo 7.5 kN)
- Air cleaning (only Premium Light)

Standard equipment

Clamping unit with 4 pieces APS 140 Premium Light or Basic
Quick pneumatic connections

For clamping pallets see next catalog pages

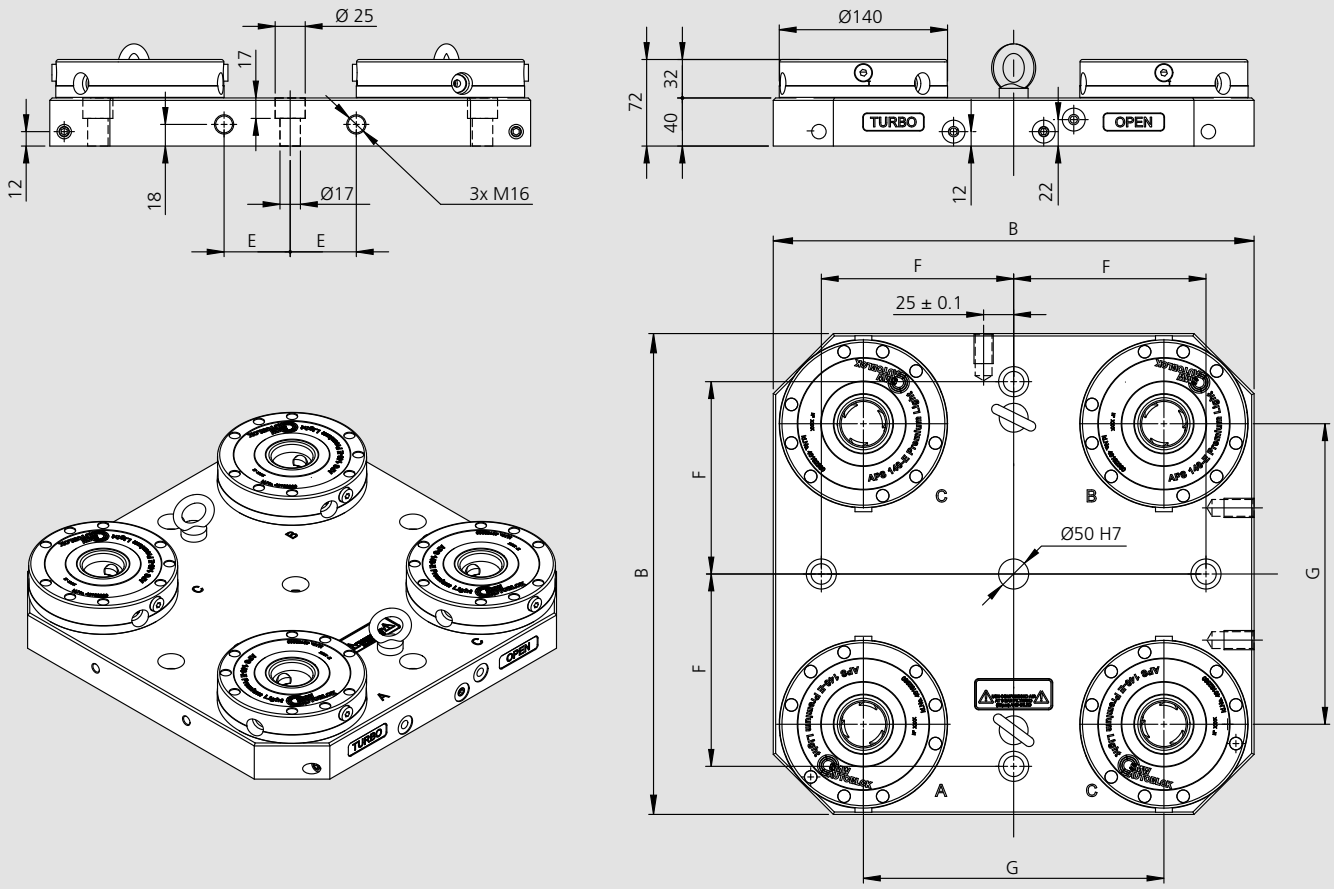

Subject to technical changes.

Type	Id. No.	B [mm]	E [mm]	F [mm]	G [mm]	Pull-in force with Turbo [kN]	Repeatability [mm]	Weight [kg]
Clamping unit with 4 APS 140 Premium Light	46167040	400	55	160	250	26*	< 0.005	57
Clamping unit with 4 APS 140 Basic	46167045	400	55	160	250	26*	< 0.005	57
Clamping unit with 4 APS 140 Premium Light	46167050	500	75	200	300	26*	< 0.005	85
Clamping unit with 4 APS 140 Basic	46167055	500	75	200	300	26*	< 0.005	85
Clamping unit with 4 APS 140 Premium Light	46167060	630	100	250	420	26*	< 0.005	130
Clamping unit with 4 APS 140 Basic	46167065	630	100	250	420	26*	< 0.005	130

* For each module.

APS 140

Clamping unit

READY TO GO

Application/customer benefits

- Pre-assembled clamping unit with 4 pieces APS 140 Premium Light or Basic
- For 5-axis machining center
- Universal applicable
- Fast and easy set-up

Technical features

- 3 clamping slides (Basic: 2 clamping slides)
- Repeatability < 0.005 mm
- Turbo function to increase the pull-in forces (pull-in force without Turbo 7.5 kN)
- Air cleaning (only Premium Light)

Standard equipment

Clamping unit with 4 pieces APS 140 Premium Light or Basic
Quick pneumatic connections

For clamping pallets see next catalog pages

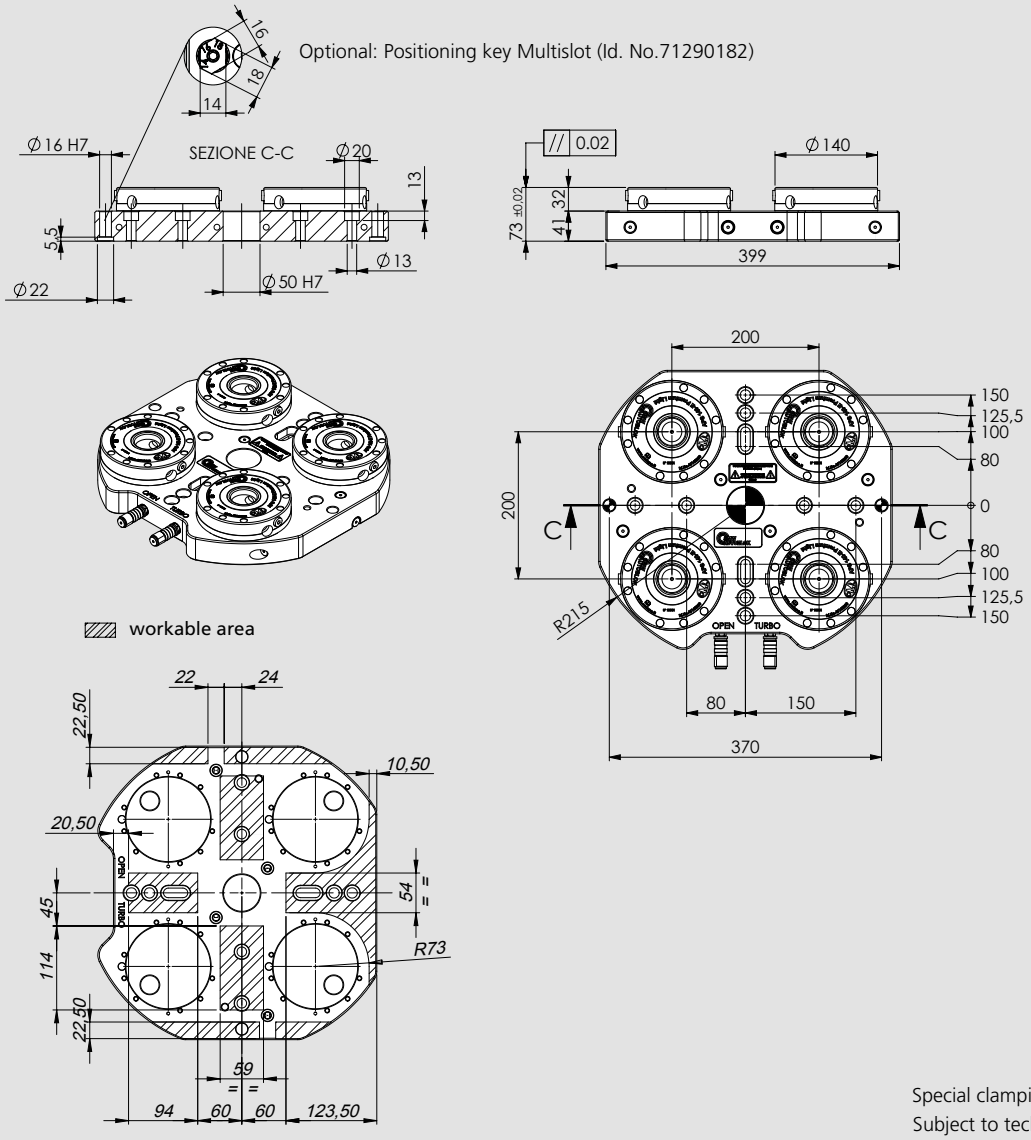

Special clamping units on request.
Subject to technical changes.

Type	Id. No.	Pull-in force with Turbo [kN]	Repeatability [mm]	Weight [kg]
Clamping unit with 4 APS 140 Premium Light	46168020	26*	< 0.005	45
Clamping unit with 4 APS 140 Basic	46168025	26*	< 0.005	45

* For each module.

APS 140

READY TO GO

Application/customer benefits

- Pre-assembled clamping unit with 5 pieces APS 140 Premium Light or Basic
- For 5-axis machining center
- Universal applicable
- Fast and easy set-up

Technical features

- 3 Clamping slides (Basic: 2 Clamping slides)
- Repeatability < 0.005 mm
- Turbo function for increasing the pull-in forces (pull-in force without Turbo 7.5 kN)
- Air cleaning (only Premium Light)
- Grid dimension 200 mm

Standard equipment

Clamping unit with 4 modules APS 140-E Premium Light or Basic + 1 modules APS 140-E Premium

For clamping pallets please see next catalog pages

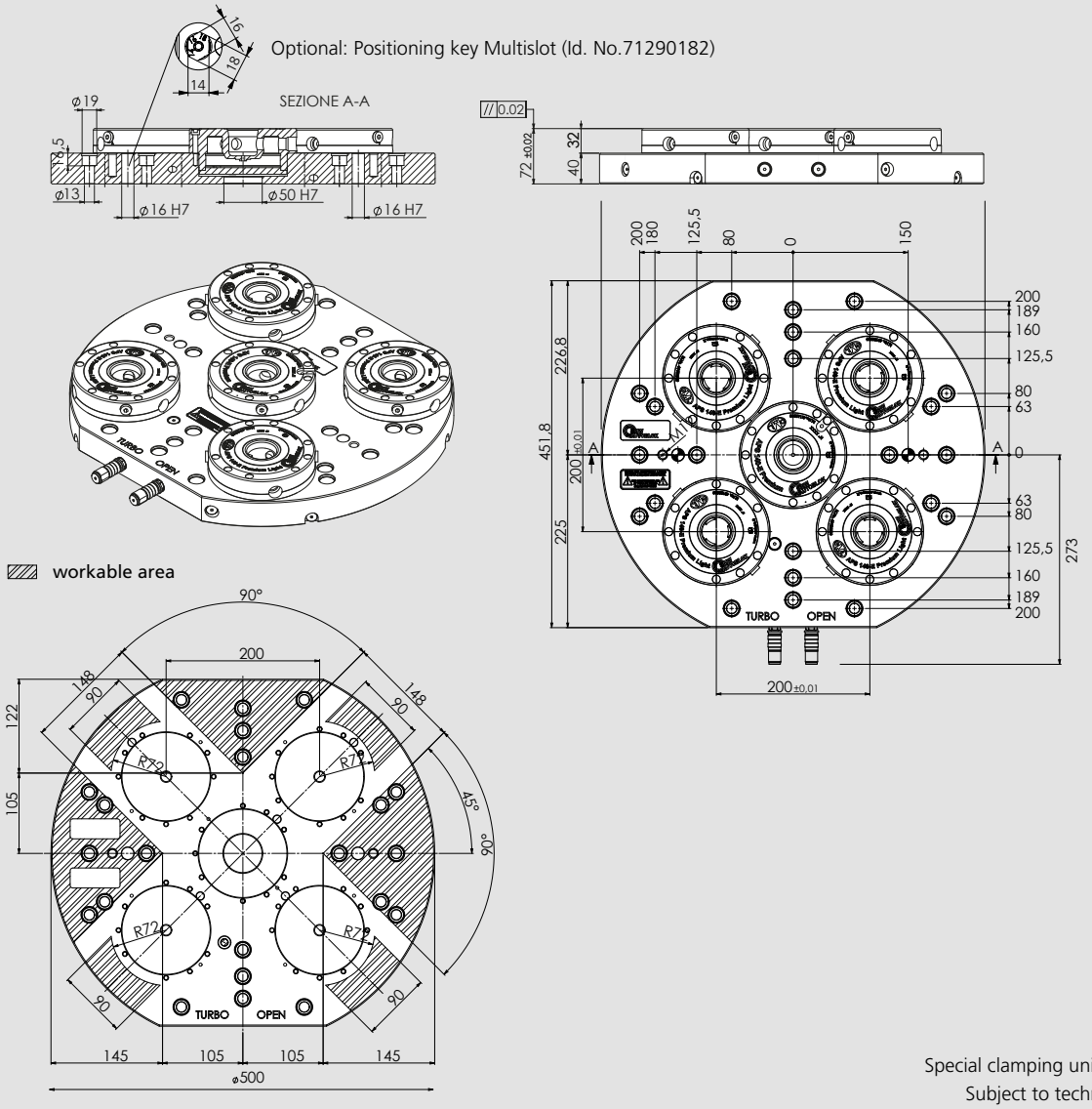

Special clamping units on request.
Subject to technical changes.

Type	Id. No.	Pull-in force with Turbo [kN]	Repeatability [mm]	Weight [kg]
Clamping unit with APS 140 Premium Light	46168040	26*	< 0.005	68
Clamping unit with con 5 APS 140 Basic	46168045	26*	< 0.005	67

* For each module.

APS 140

Clamping unit

Application/customer benefits

- Pre-assembled clamping unit with 6 pieces APS 140 Premium Light or Basic
- Universal applicable
- Fast and easy set-up

Technical features

- 3 clamping slides (Basic: 2 clamping slides)
- Repeatability < 0.005 mm
- Turbo function for increasing the pull-in forces (pull-in force without Turbo 7.5 kN)
- Air cleaning (only Premium Light)
- Interaxis 200 mm

Standard equipment

Clamping unit with 6 pieces APS 140 Premium Light or Basic
Quick pneumatic connections

For clamping pallets see next catalog pages

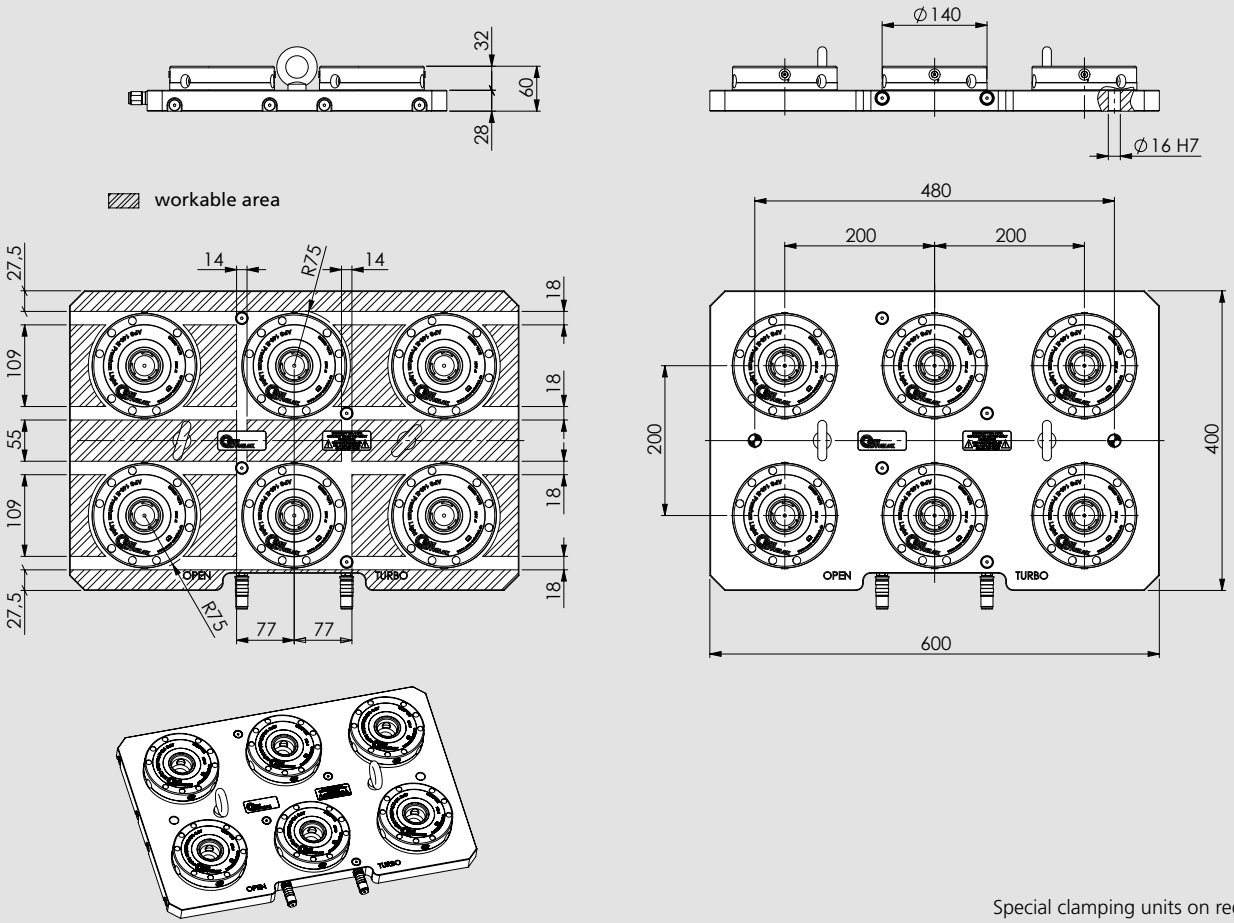

Special clamping units on request.
Subject to technical changes.

Type	Id. No.	Pull-in force with Turbo [kN]	Repeatability [mm]	Weight [kg]
Clamping unit with 6 APS 140 Premium Light	46168110	26*	< 0.005	83
Clamping unit with 6 APS 140 Basic	46168115	26*	< 0.005	84

* For each module.

Media feed 3-axis zero feedings

■ For plate with 2 APS 140-E

APS 140-E

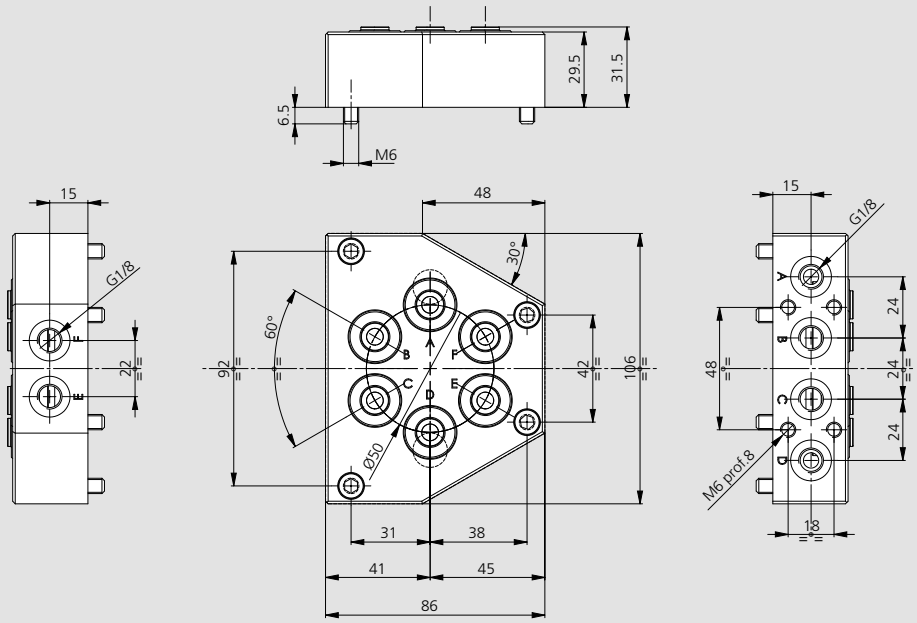

Example

460020
460021

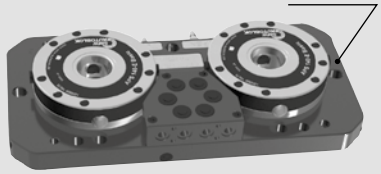

Subject to technical changes.

Media feed for plate with 2 APS 140	Id. No.	Possible feedings	Weight [kg]
Kit SUPP-2 INN PASCAL WVP-2FPL on plate with 2 APS 140 3-axis	46202040	A-D *	1.6
Kit SUPP-4 INN PASCAL WVP-2FPL on plate with 2 APS 140 3-axis	46202032	A-B-C-D *	1.6
Kit SUPP-6 INN PASCAL WVP-2FPL on plate with 2 APS 140 3-axis	46202033	A-B-C-D-E-F *	1.6

* See example page 43

Media feed 3-axis zero feedings

■ For plate with 4 APS 140-E

APS 140-E

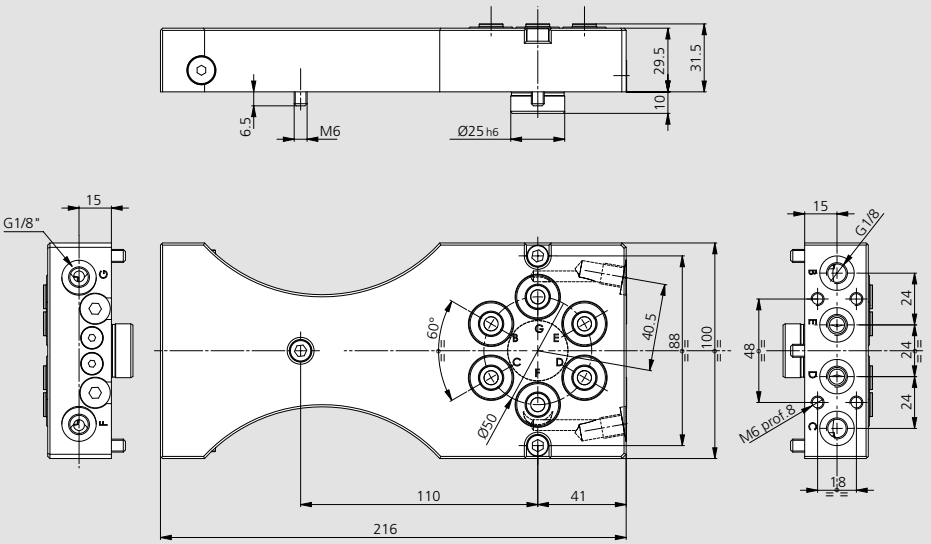

Example

460022
460023

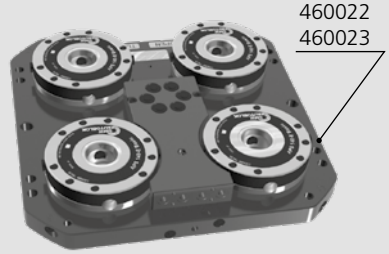

Subject to technical changes.

Media feed for plate with 4 APS 140	Id. No.	Possible feedings	Weight [kg]
Kit SUPP-2 INN PASCAL WVP-2FPL on plate with 4 APS 140 3-axis	46202039	B-C *	3.8
Kit SUPP-4 INN PASCAL WVP-2FPL on plate with 4 APS 140 3-axis	46202028	B-C-D-E *	3.8
Kit SUPP-6 INN PASCAL WVP-2FPL on plate with 4 APS 140 3-axis	46202029	B-C-D-E-F-G *	3.8

* See example page 43

APS 140

Module height extension

Application/customer benefits

- Pre-assembled clamping unit with 1 piece APS 140 Premium
- Universal applicable
- Fast and easy set-up

Technical features

- 3 clamping slides
- Repeatability < 0.005 mm
- Turbo function to increase the pull-in forces (pull-in force without Turbo 7.5 kN)
- Anti rotating protection
- Air cleaning

Standard equipment

Clamping unit with 1 piece APS 140 Premium
Quick pneumatic connections

For clamping pallets see next catalog pages

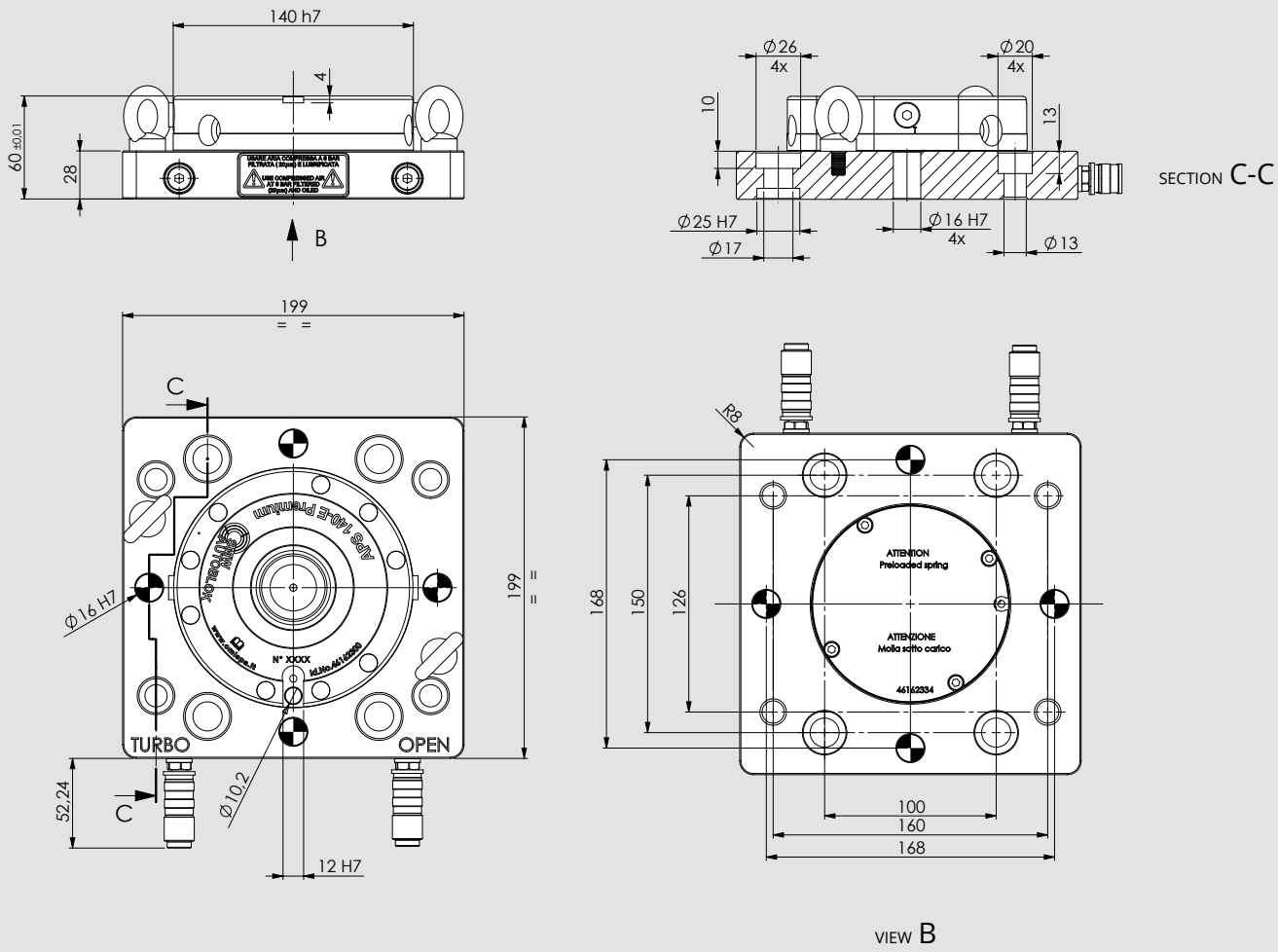

Subject to technical changes.

Module height extensions (APS included)	Id. No.	Height [mm]	Weight [kg]
Module extention with 1 APS 140 Premium	46168410	60	11

Module height extension with APS 100 E PREMIUM

APS 100

Application/customer benefits

- Pre-assembled module extension unit with 1 piece APS 100 Premium
- Universal applicable
- Fast and easy set-up

Technical features

- 2 clamping slides
- Repeatability < 0.005 mm
- Turbo function for increasing the pull-in forces (pull-in force without Turbo 4 kN)
- Anti rotating key-seat
- Air cleaning

Standard equipment

Module height extension with 1 piece APS 100 Premium

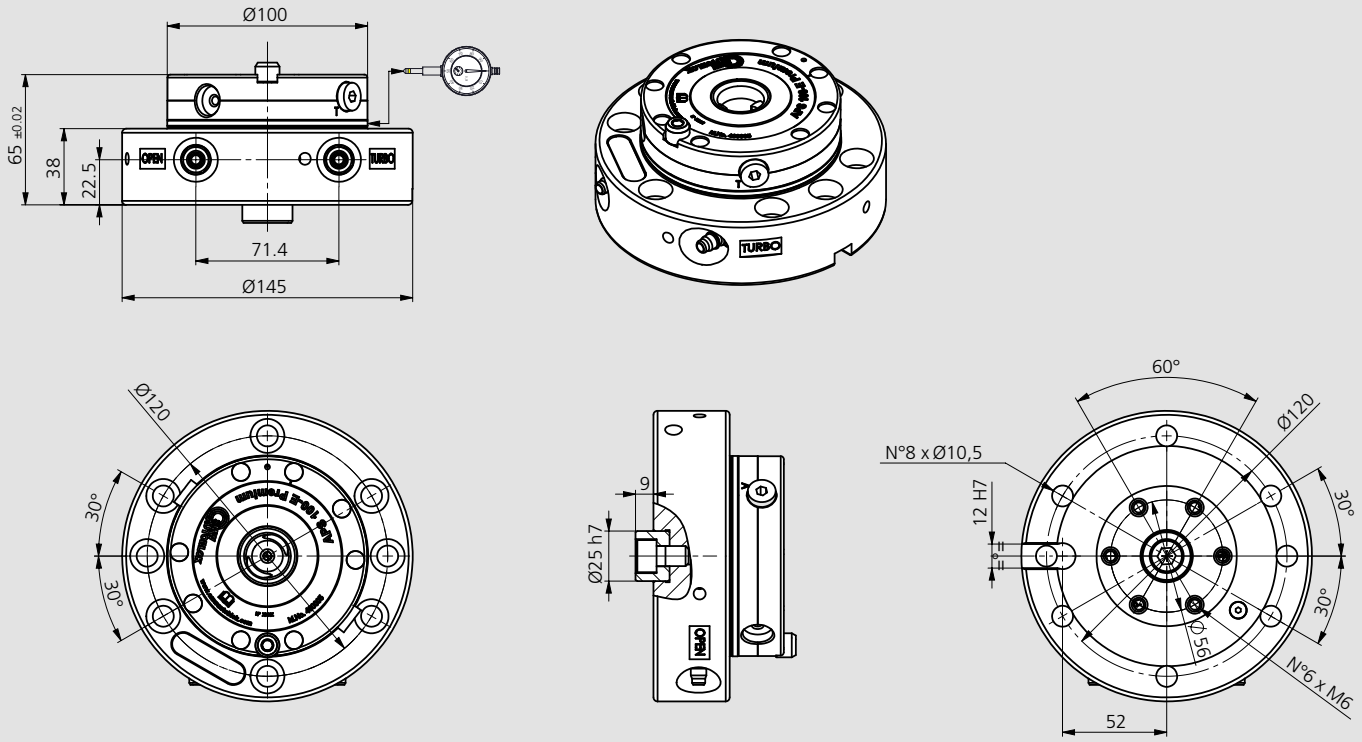

Subject to technical changes.

Module height extension (APS included)	Id. No.	Height [mm]	Weight [kg]
Module extension APS 100 Premium H65	460110	65	6

Note 1: For every unit the key (Id. No. 46162133) is included
Note 2: T-nuts sets: see page 64.
Note 3: Mountable also on APS 140.
Note 4: When using the module in rotation (r.p.m. 200-1000) request balancing (listed separately).
Note 5: The module extension is equipped with radial screws for the fine centering of the APS.

APS 140

Module height extension with APS 140 E PREMIUM

Application/customer benefits

- Pre-assembled clamping unit with 1 piece APS 140 Premium
- Universal applicable
- Fast and easy set-up

Technical features

- 3 clamping slides
- Repeatability < 0.005 mm
- Turbo function to increase the pull-in forces (pull-in force without Turbo 7.5 kN)
- Anti rotating protection
- Air cleaning

Standard equipment

Module height extension with 1 piece APS 140 Premium

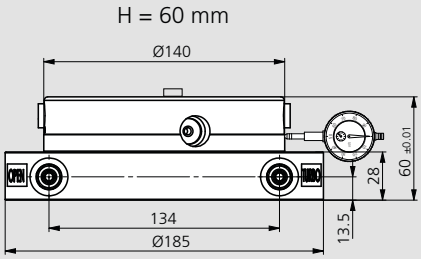

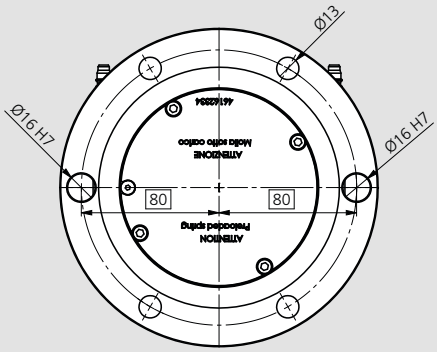

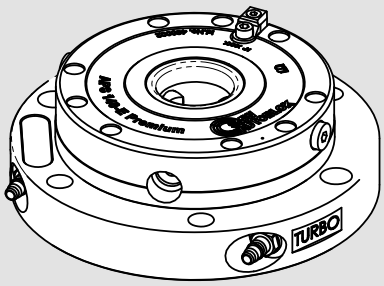

Subject to technical changes.

Module height extension (APS included)	Id. No.	Height [mm]	Weight [kg]
Module extension APS 140 Premium H60	460112	60	8

Note 1: For every unit the key (Id. No. 46162333) is included.
Note 2: T-nuts sets: see page 64.

APS 140

Application/customer benefits

- Flange for indexing tables and CNC indexing tables with T-slots flange

Technical features

- 3 clamping slides
- Repeatability < 0.005 mm
- Turbo function to increase the pull-in forces (pull-in force without Turbo 7.5 kN)
- Anti rotation key-seat
- Air sensing
- Air cleaning
- Fully sealed (proofline)

Standard equipment

Flange with 1 APS 140 modul for indexing tables
and for orientation on indexing tables with T-slots

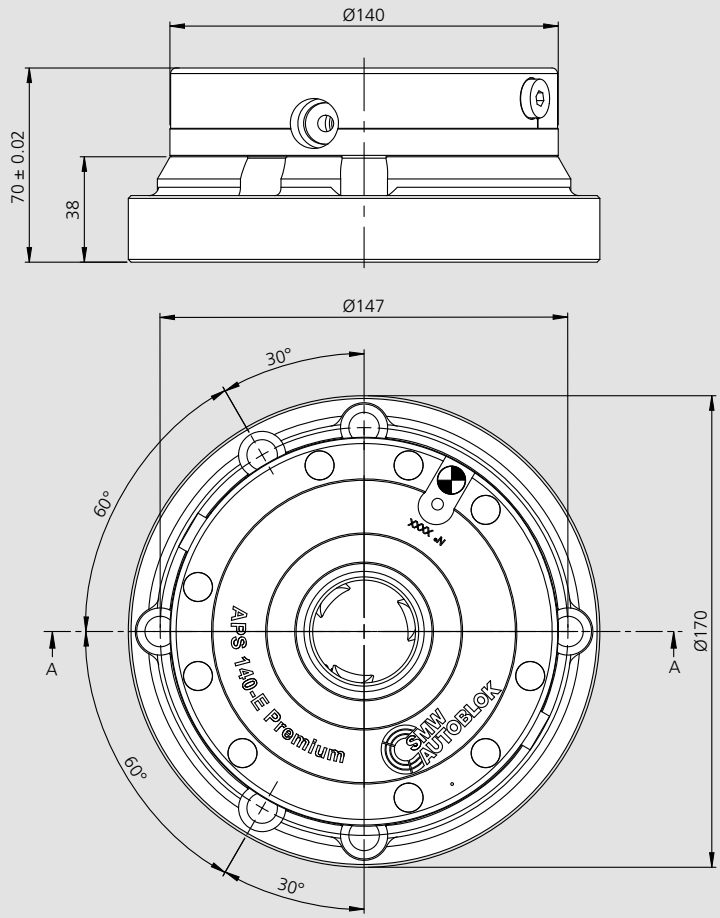

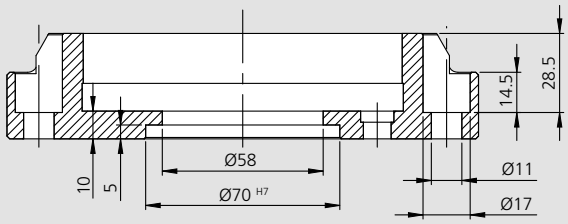

Subject to technical changes.

Module height extension (APS included)	Id. No.	Height [mm]	Gewicht [kg]
Module height extension	46167620	70	17

APS 140

Module height extension with APS 140 E PREMIUM

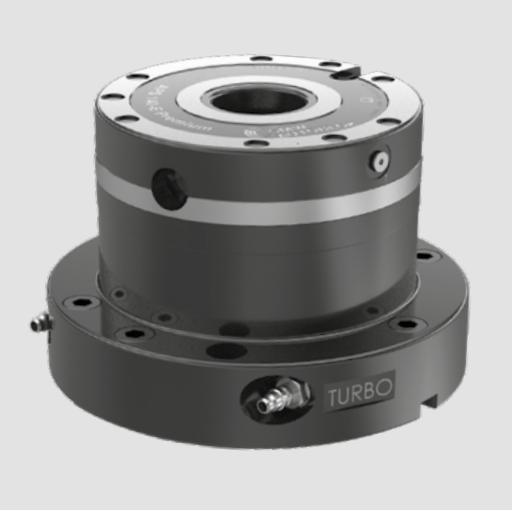

Application/customer benefits

- Pre-assembled module extension unit with 1 piece APS 140 Premium
- Universal applicable
- Fast and easy set-up

Technical features

- 3 clamping slides
- Repeatability < 0.005 mm
- Turbo function to increase the pull-in forces (pull-in force without Turbo 7.5 kN)
- Anti rotating protection
- Air cleaning

Standard equipment

Module height extension with 1 piece APS 140 Premium

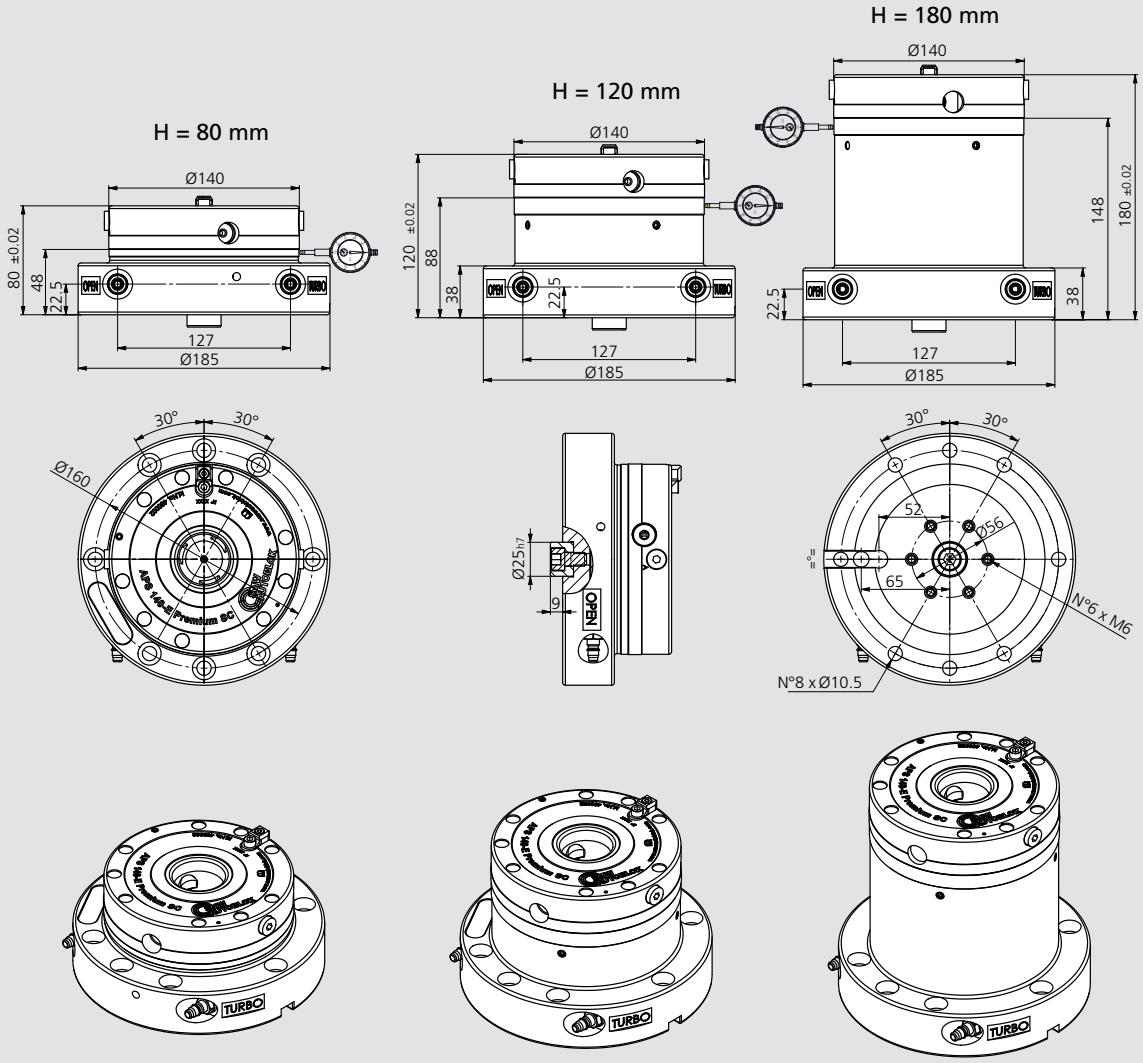

Subject to technical changes.

Module height extension (APS included)	Id. No.	Height [mm]	Weight [kg]
Module extension APS 140 Premium H80	460113	80	11
Module extension APS 140 Premium H120	460114	120	14
Module extension APS 140 Premium H180	460115	180	18

Note 1: For every unit the key (Id. No. 46162133) is included
Note 2: T-nuts sets: see page 64.
Note 3: Mountable also on APS 190 and APS 140.
Note 4: When use the module in rotation (200-1000 r.p.m.) request balancing (listed separately).
Note 5: The module extension is equipped with radial screws for the fine centering of the APS.

APS 190

Application/customer benefits

- Pre-assembled module extension unit with 1 piece APS 190 Premium
- Universal applicable
- Fast and easy set-up

Technical features

- 3 clamping slides
- Repeatability < 0.005 mm
- Turbo function to increase the pull-in forces (pull-in force without Turbo 7.5 kN)
- Anti rotating protection
- Air cleaning

Standard equipment

Module height extension with 1 piece APS 190 Premium

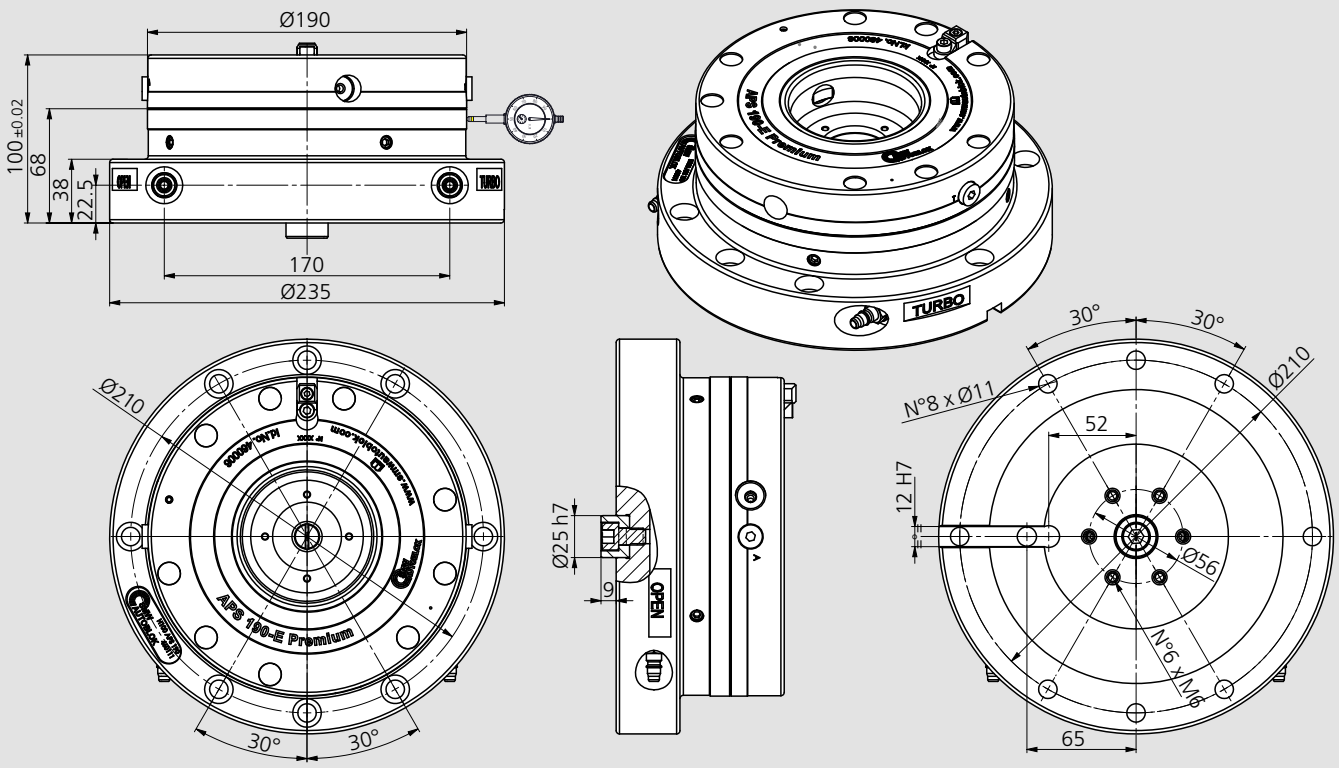

Subject to technical changes.

Module height extension (APS included)	Id. No.	Height [mm]	Weight [kg]
Module extension APS 190 PREMIUM H100	**460111**	100	20.5

Note 1: For every unit the key (Id. No. 46162133) is included
Note 2: T-nuts sets: see page 64.
Note 3: Mountable also on APS 190 and APS 140.
Note 4: When use the module in rotation (200-1000 r.p.m.) request balancing (listed separately).
Note 5: The module extension is equipped with radial screws for the fine centering of the APS.

APS
Clamping units
for vertical turning lathes

Industry 4.0
Product

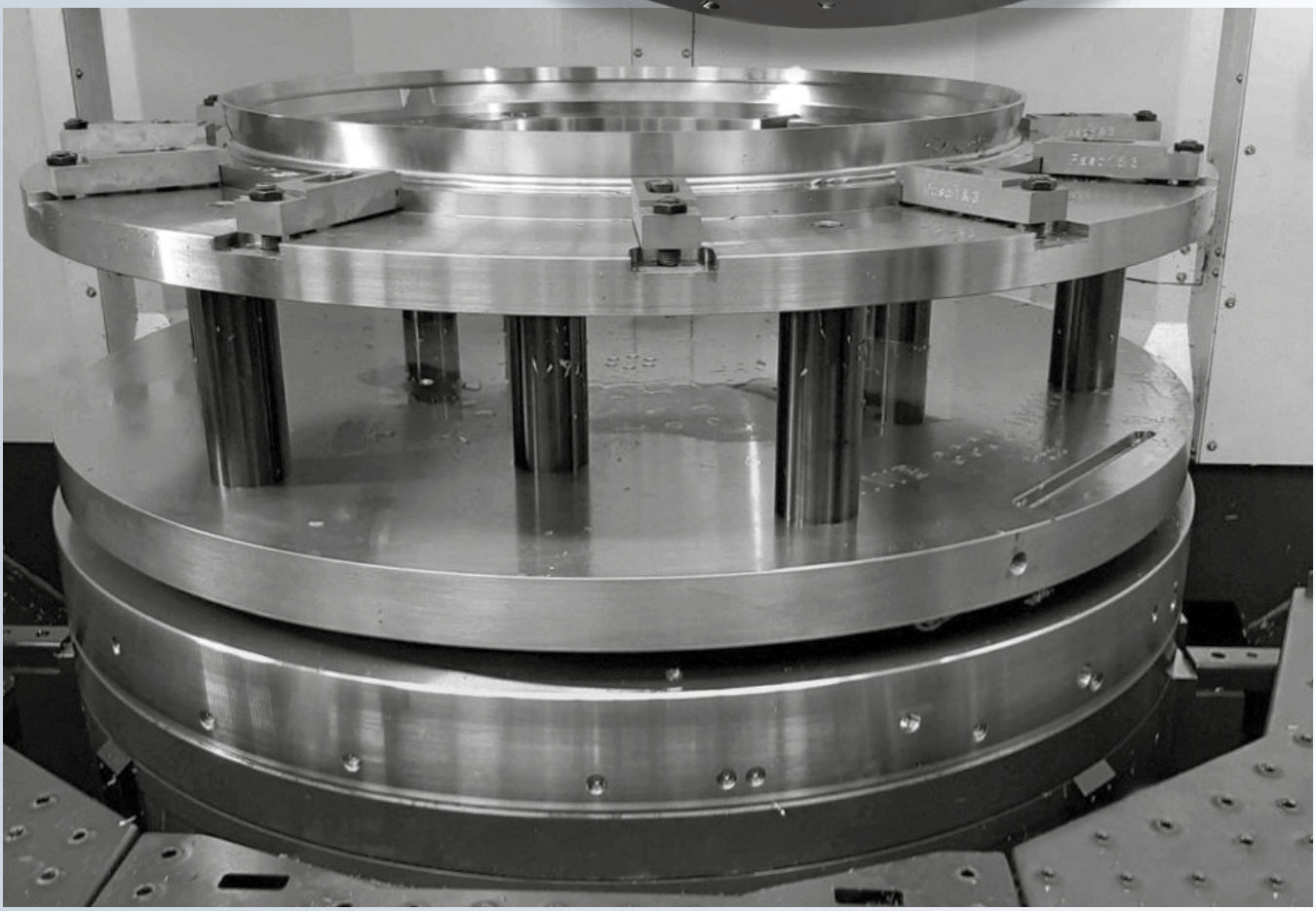

APS 190 - 140

Application/customer benefits

- Pre-assembled clamping unit with APS 190 Premium and APS 140 Premium Light
- For vertical turning machining center
- Universal applicable with ASA flanges or directly on the spindle nose
- Fast and easy set-up

Technical features

- 3 clamping slides
- Repeatability < 0.005 mm
- Turbo function to increase the pull-in forces (pull-in force without Turbo 13.5 kN for APS 190 and 7.5 kN for APS 140)
- Visual control for open and turbo
- Air cleaning

Standard equipment

Clamping unit with APS 190 Premium and APS 140 Premium Light
ASA flange not included

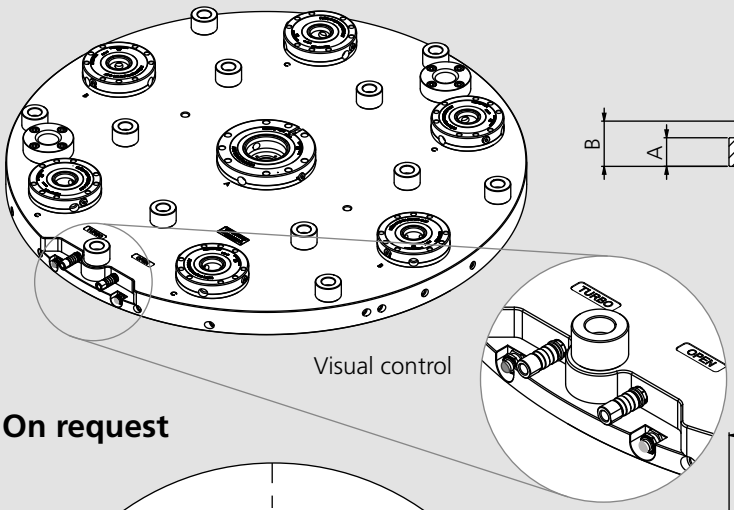

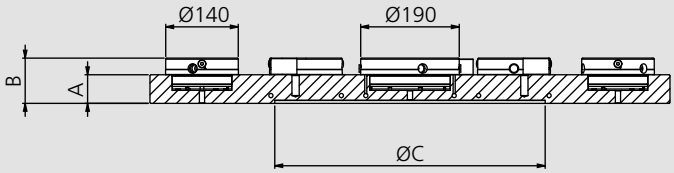

On request

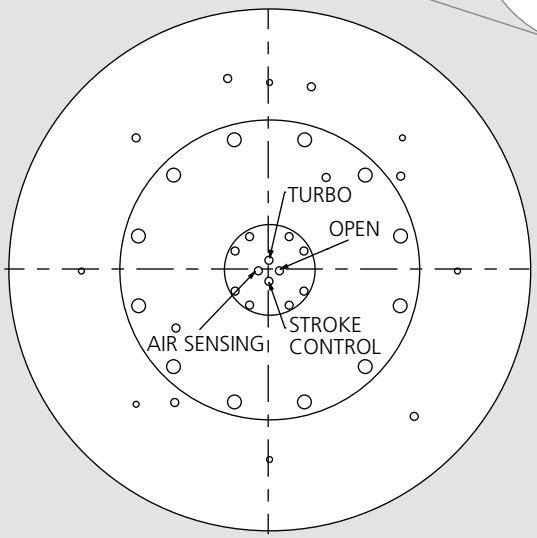

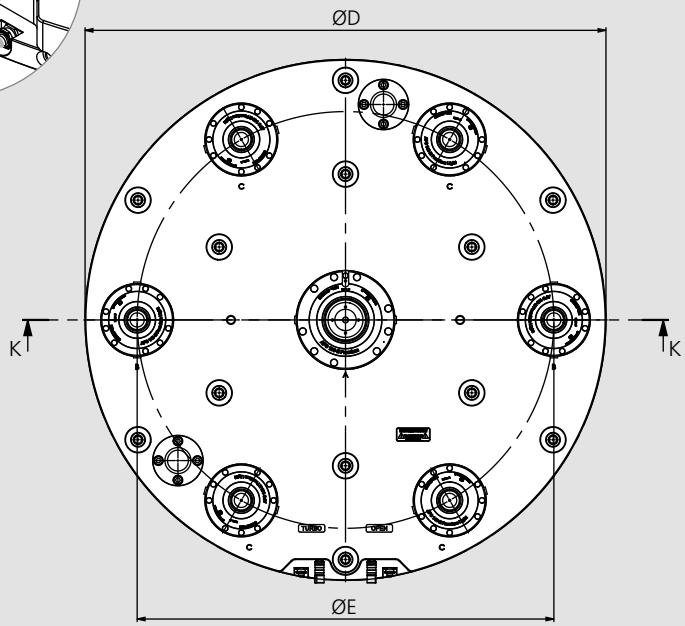

Subject to technical changes.

Type	Id. No.	Pull-in force with Turbo [kN]	Repeatability [mm]	Ø	A	B	C	D	E	APS 140 n°	APS 190 n°	Weight [kg]
Clamping unit with APS 190 Premium + APS 140 Premium light	on request	45 (APS 190) 26 (APS 140)	< 0.005	630	50	82	380	630	480	4	1	128
	on request		< 0.005	800	55	87	520	800	600	6	1	222
	on request		< 0.005	1000	55	87	520	1000	800	6	1	346
	on request		< 0.005	1200	60	92	720	1200	1000	8	1	519

APS 190 - 140

Top plate for clamping unit

Application/customer benefits
- Pre-assembled clamping pallet for APS turning plates
- Universal applicable
- Ready to use

Technical features
- Fully assembled
- Rust protected
- High quality steel (1.1730)

Standard equipment
1 clamping pallet: Fully assembled with 1 clamping pin (type A for APS 190), 2 clamping pin (type B for APS 140); 2 / 4 / 6 clamping pin (type C for APS 140), 2 male pre-centering pins

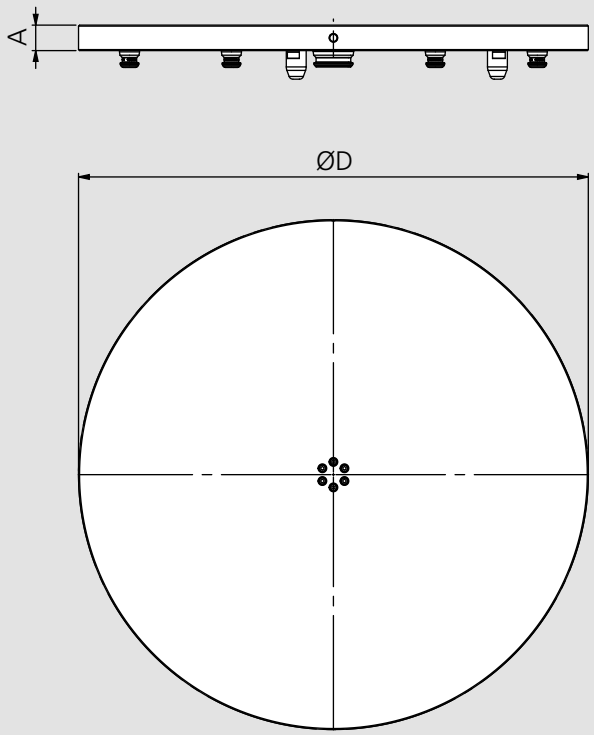

Subject to technical changes.

Application examples

Id. No.	Ø	A	Weight [kg]
on request	630	40	102
on request	800	40	163
on request	1000	50	316
on request	1200	50	455

Mounting flanges on short taper spindle noses

- Direct and indirect mounting
- Reduction and increase mounting

Chuck flanges

DIN 55026 / ISO-A 702/1

Application/customer benefits

- Flanges for short taper mount spindles (DIN 55026/ISO-A 702/1)
- Easy installation of chucks on the machine spindle

Flange FF 1 = Direct mounting
Flange FF 2 = Reduction of taper
Flange FF 3 = Increase of taper

Technical features

- Case hardened
- High precision grinding of the taper and all reference dimensions

Standard equipment

Fixing bolts of the indirect
mounting flange on the spindle nose

Type FF 1
ISO-A mounting direct

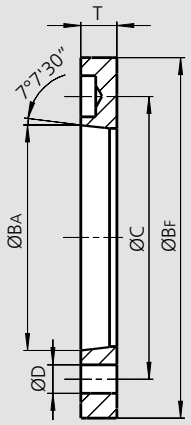

Type FF 2
ISO-A mounting reduction

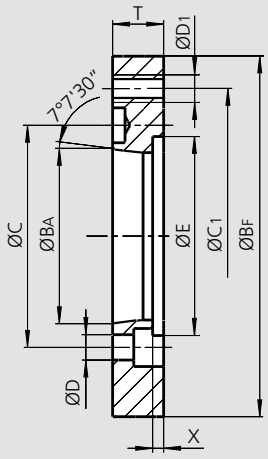

Type FF 3
ISO-A mounting increase

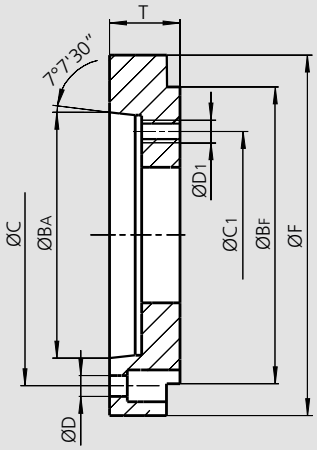

Subject to technical changes.

Flange type FF 1

Flange Id. No.	Spindle nose	BF [mm]	BA [mm]	C [mm]	D [mm]	T [mm]	Weight [kg]
24125000	**A15**	380	285.775	330.2	25	23	8
24127100*	**A15**	380	285.775	330.2	25	33	11.5
24178000	**A20**	520	412.775	463.6	27	25	14.5

* **Suggestion:** This flange is thicker than the standard one, to be used only if necessary!

Flange type FF 2

Flange Id. No.	Spindle nose	BF [mm]	BA [mm]	C [mm]	D [mm]	C1 [mm]	D1 [mm]	E [mm]	X [mm]	T [mm]	Weight [kg]
24185000	**A8**	380	139.719	171.4	17	330.2	M24	197	10	40	24
24115000	**A11**	380	196.869	235	21	330.2	M24	197	10	40	21
24116100	**A11**	520	196.869	235	21	463.6	M24	267	12	45	54
24126100	**A15**	520	285.775	330.2	25	463.6	M24	-	-	40	40
24179400	**A20**	720	412.775	463.6	27	647.6	M30	-	-	50	93

Flange type FF 3

Flange Id. No.	Spindle nose	BF [mm]	BA [mm]	C [mm]	D [mm]	C1 [mm]	D1 [mm]	F [mm]	T [mm]	Weight [kg]
24175000	**A20**	380	412.777	463.6	27	330.2	M24	520	58	55

APS Clamping units

customized solutions for automation

Industry 4.0 Product

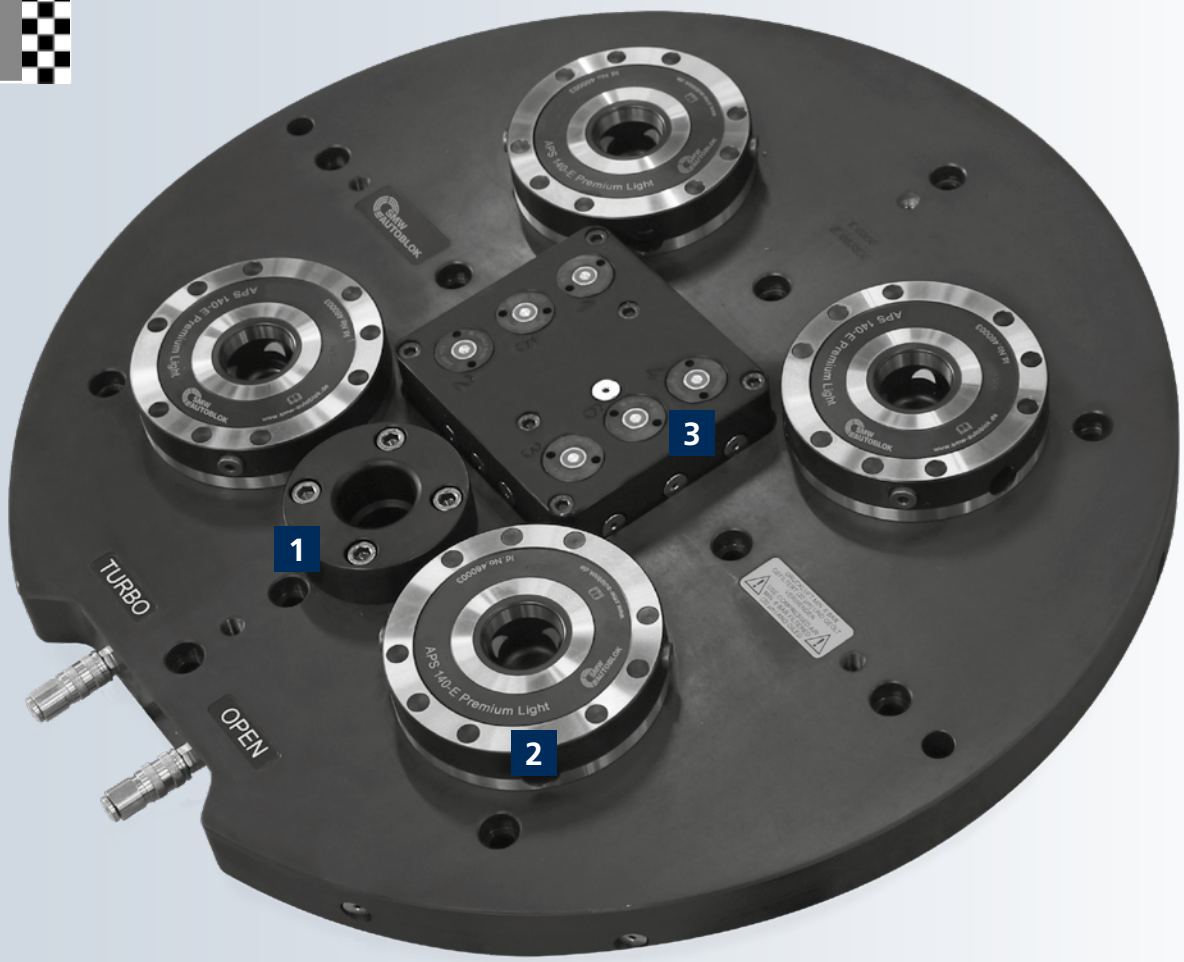

Functional Overview of the APS Clamping Units

1	Pre-centering
2	APS Zero point clamping module
3	Distribution plate for media feed (pneumatic / hydraulic) 6 channel

Application examples

Solution 1

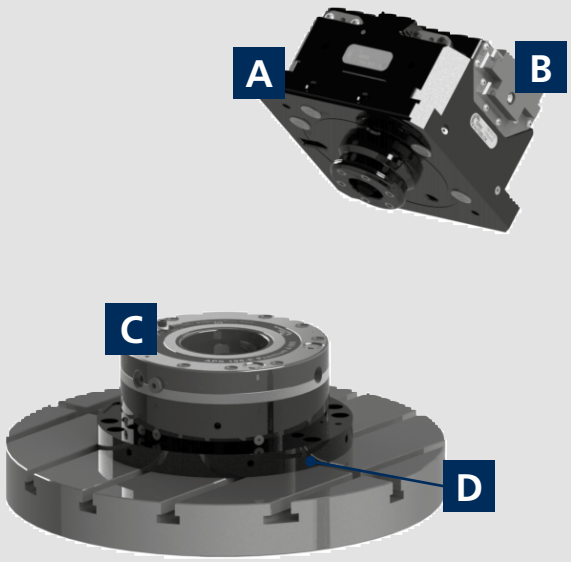

Id. No.	Solution 1	Solution 2	Solution 3
A	46200103	46201111	46201111
B	77904418	77904418	77904418
C	46162640	46202028	46202024
D	46203000	460022	46202000

Solution 2

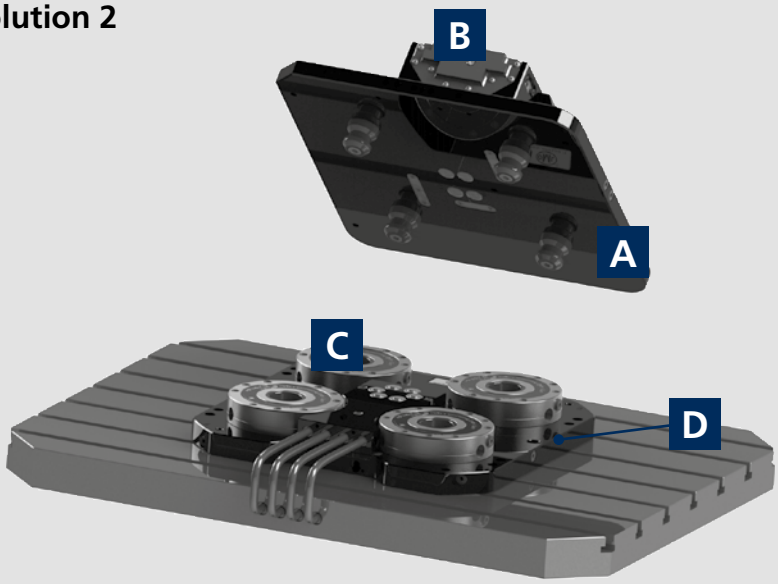

Solution 3

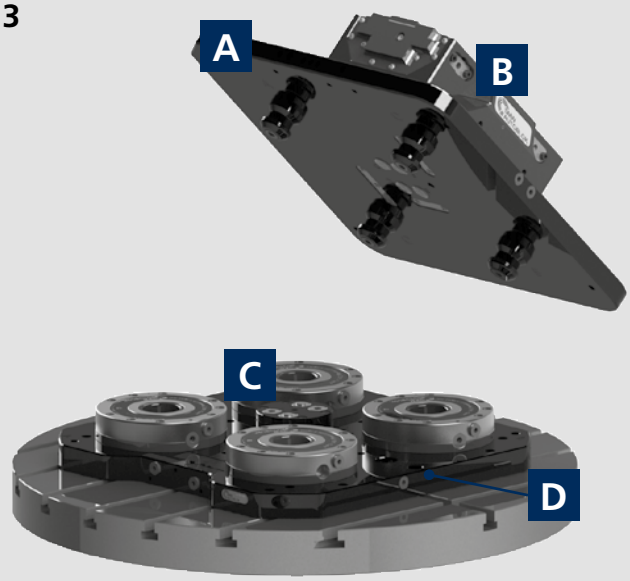

Hydraulic power chuck

APS
Clamping units
for automation

Industry 4.0 Product

For more detailed information please ask our SMW-AUTOBLOK experts.

Possible configuration scheme for 5-axis machines 2 / 3 / 4 feedings

1 Feedings - for 5-axis machines

Protection cover

Id. No. 46202008 std. equipment with plate Id. No. 46202000

2 feedings + Open Turbo

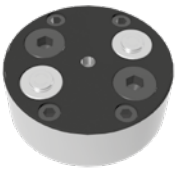

Id. No. 46202025

4 feedings + Open Turbo

Id. No. 46202024

See application example page 68

2 Plate with 4 APS 140
with central distributor

- **Prepared for 4 feedings + Open Turbo Id. No. 46202000**

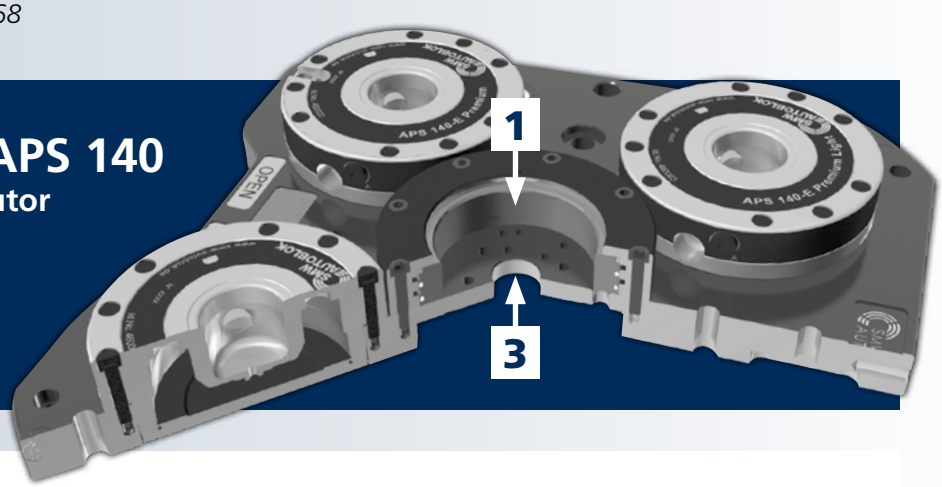

3 Distributor

- **To be designed specifically for each machine until to 6 feedings (must be definied in case of order).**

2 feedings

4 feedings

6 feedings

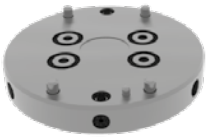

4 T-nuts set

Optional

Order guide:
1. Plate group with n.4 APS 140 Id. No. 46202000
2. Feedings
3. Distributor
4. T-nuts set

Clamping unit for automation 5-axis 2 / 4 / 6 feedings

4 APS 140-E

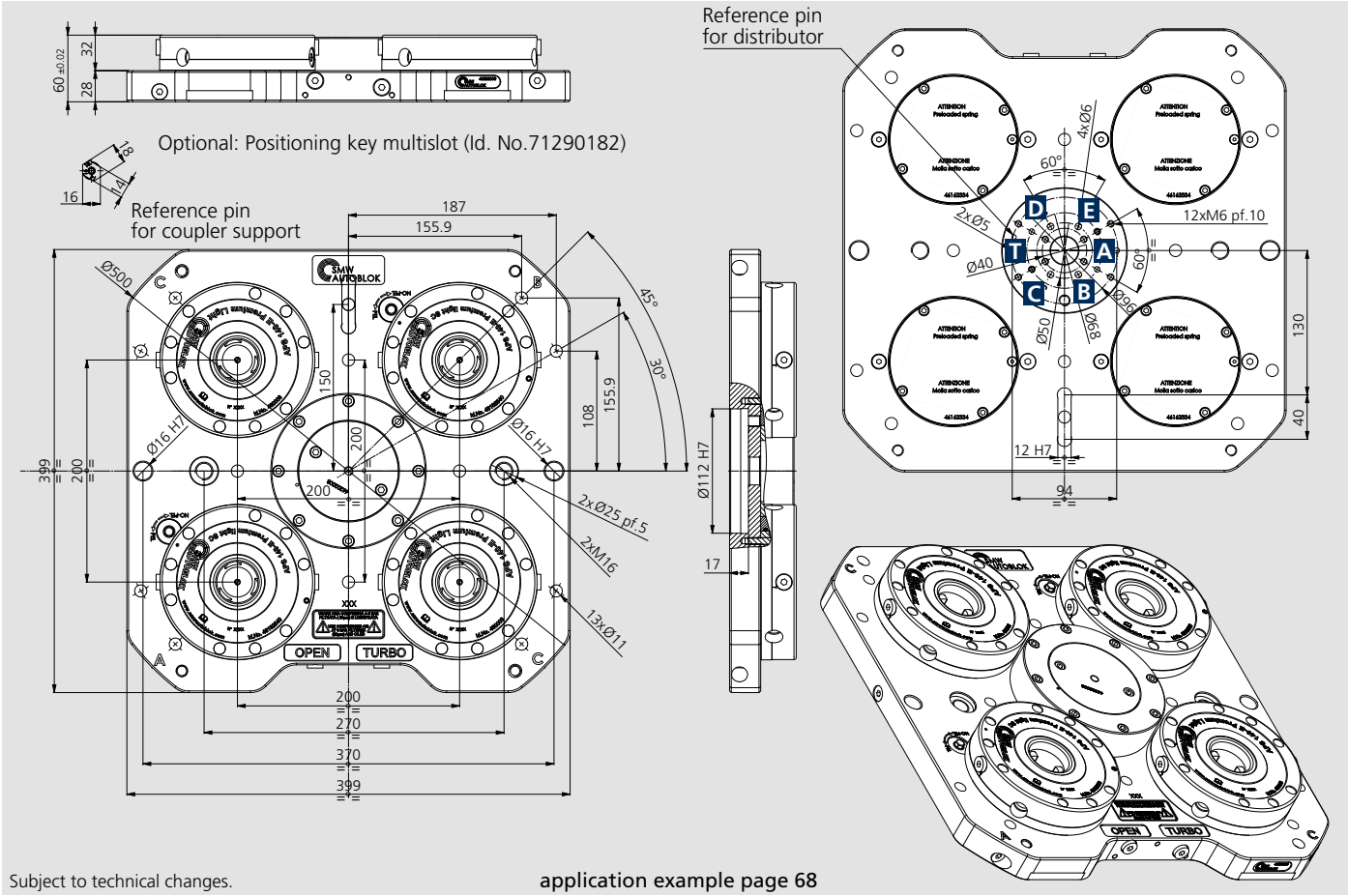

Subject to technical changes.

application example page 68

Plate (APS included)	Id. No.	Weight [kg]
Plate 4 APS 140 E PREMIUM for 5-axis	46202000	43

A APS open **T** Air sensing / Turbo APS

The feedings **B C D E** are transferred on the pallet between pneumatic and hydraulic couplers put on the body of the APS (Id. No. 46202024 or 46202025). If there are one or more of the Twin Vise models STV or PT mounted on the pallet, the feedings can be used in these different ways:

B Twin Vise open **C** Twin Vise closed **D** Stroke control valve Twin Vise

E Air sensing Twin Vise

* **Note 1:** Can be used the air sensing on the plate for the 5 axis using the TURBO feeding.
****Note 2:** When air sensing is not used, it can be excluded between two selectors present on the plate face.

Media feed 5-axis 2 / 4 / 6 feedings

4 APS 140-E

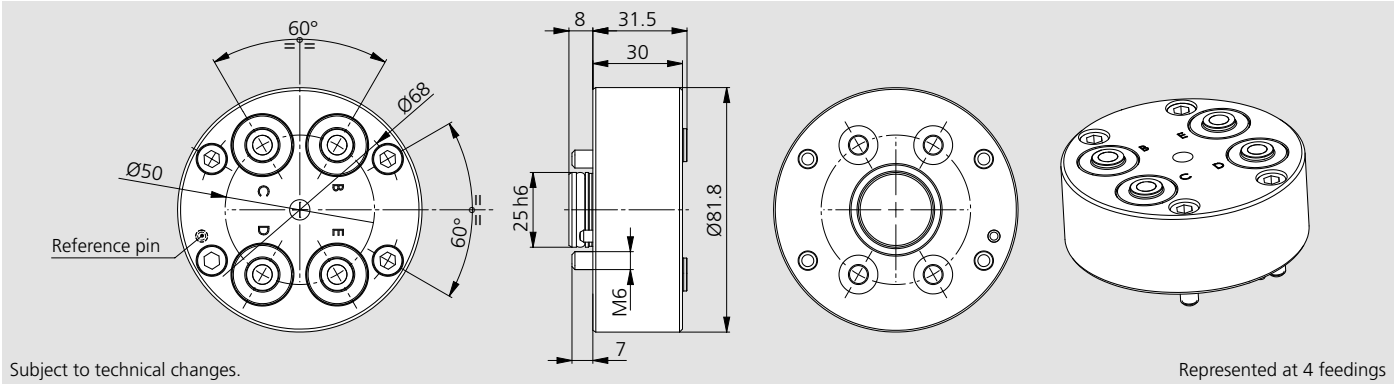

Subject to technical changes.

Represented at 4 feedings

Media feed 4 APS 140 5-axis	Id. No.	Possible feedings
Kit SUPP-4 INN PASCAL WVP-2FPL on plate 4 APS-140 5-axis	46202024	B-C-D-E
Kit SUPP-2 INN PASCAL WVP-2FPL on plate 4 APS-140 5-axis	46202025	B-C

APS
Module height extension for automation

Possible configurations scheme for 5-axis machines 2 / 4 / 6 feedings

Industry 4.0 Product

For more detailed information please ask our SMW-AUTOBLOK experts.

1 APS 190

▶ Only Open Turbo configuration

*

APS 190 E PREMIUM
46165640

▶ 2 feedings + Open Turbo configuration

*

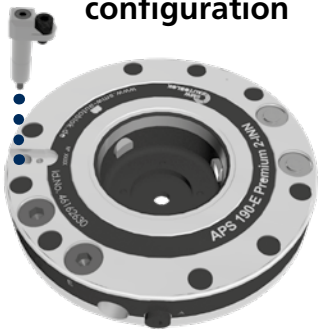

APS 190 2 INN
46162630

▶ 4 feedings + Open Turbo configuration

*

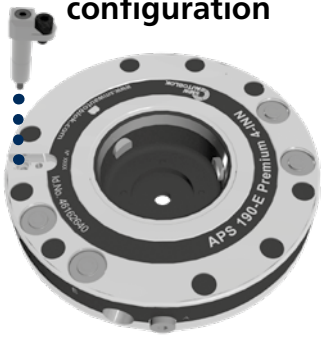

APS 190 4 INN
46162640

2 Module height extension group

▶ Prepared for 6 feedings
Id. No. 46203000

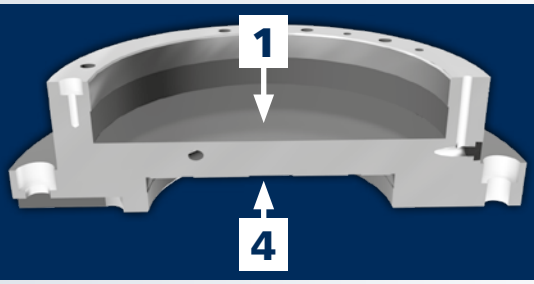

3 Key*

4 Distributor (example)

▶ To be designed specifically for each machine until to 6 feedings (must be definied in case of order).

▶ 2 feedings

▶ 4 feedings

▶ 6 feedings

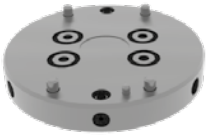

5 T-nuts set

Optional

Order guide:
1. Module height extension group Id. No. 46203000
2. APS 190 Premium
3. Key Id. No. 46162333
4. Distributor
5. T-nuts set

Module height extension one APS prepared for 5-axis machines until 6 feedings

For automation

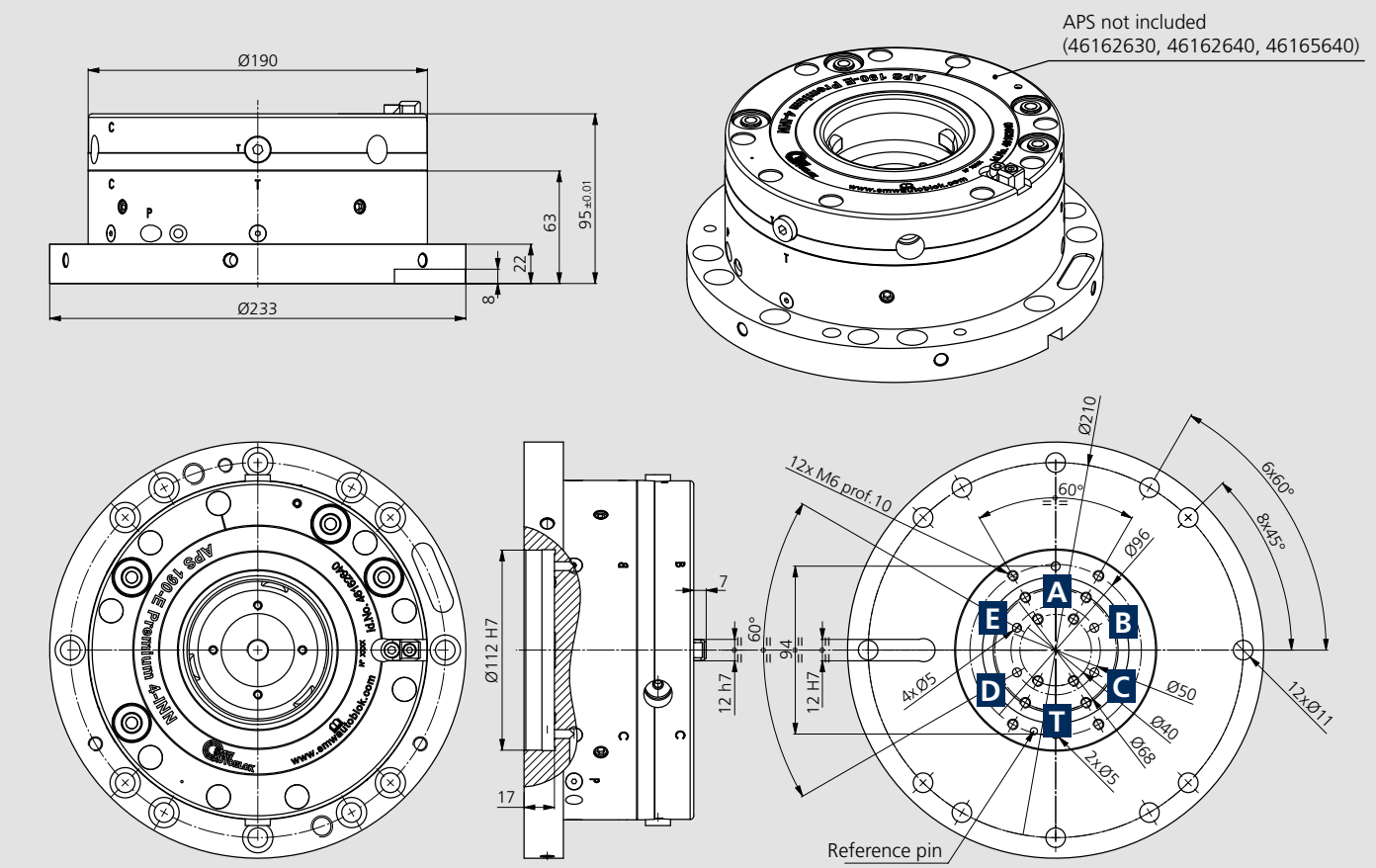

Subject to technical changes.

application example page 69

Module height extension (APS not included)	Id. No.	Height [mm]	Weight [kg]
Module height extension group N.6 feedings H95	46203000	95	10.5

A APS open

T Air sensing / Turbo APS

The feedings **B C D E** are used on the pallet between pneumatics and hydraulics couplers put on the body of 190 APS (Id. No. 46162630 and 46162640). When on the pallet is mounted a Twin vise model STV or PT the feedings can be used in these different ways:

B Twin Vise open

C Twin Vise closed

D Stroke control valve Twin Vise

E Air sensing Twin vise or Driver pin stroke control APS

The feeding **E** can not to be used on the pallet with the pneumatic / hydraulic coupler but can be used in another way to oversee the pneumatic stroke control of the APS 190; in this case the feeding is called **SC.**

180 STV

Pallet holder with 2 - 4 feedings

■ **Prepared for robot loading**

The pallet is prepared for loading with robots.

See example nr. 1 page 42

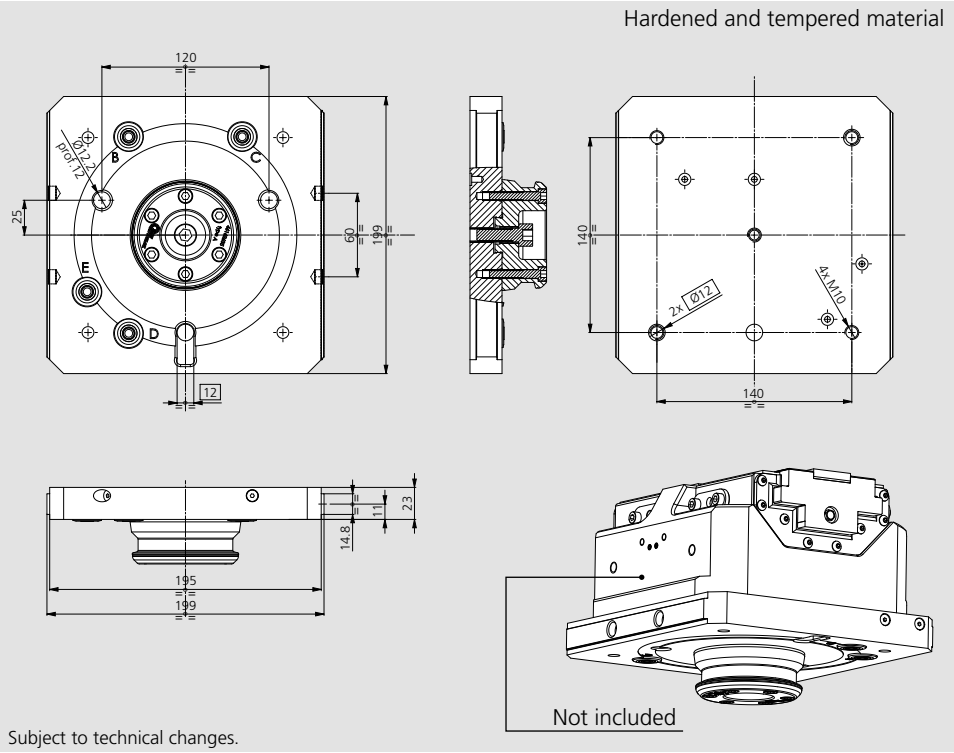

Type pallet (without vise)	Id. No.	Feedings to be used	Weight [kg]
Pallet holder 180STV 2-3 jaws with 4 feedings APS 190 loading robot	46200101	B-C-D-E	7.7
Pallet holder 180STV 2-3 jaws with 2 feedings APS 190 loading robot	46200103	B-C	7.7

225 STV

Pallet holder with 2 - 4 feedings

■ **Prepared for robot loading**

The pallet is prepared for loading with robots.

See example nr. 1 page 42

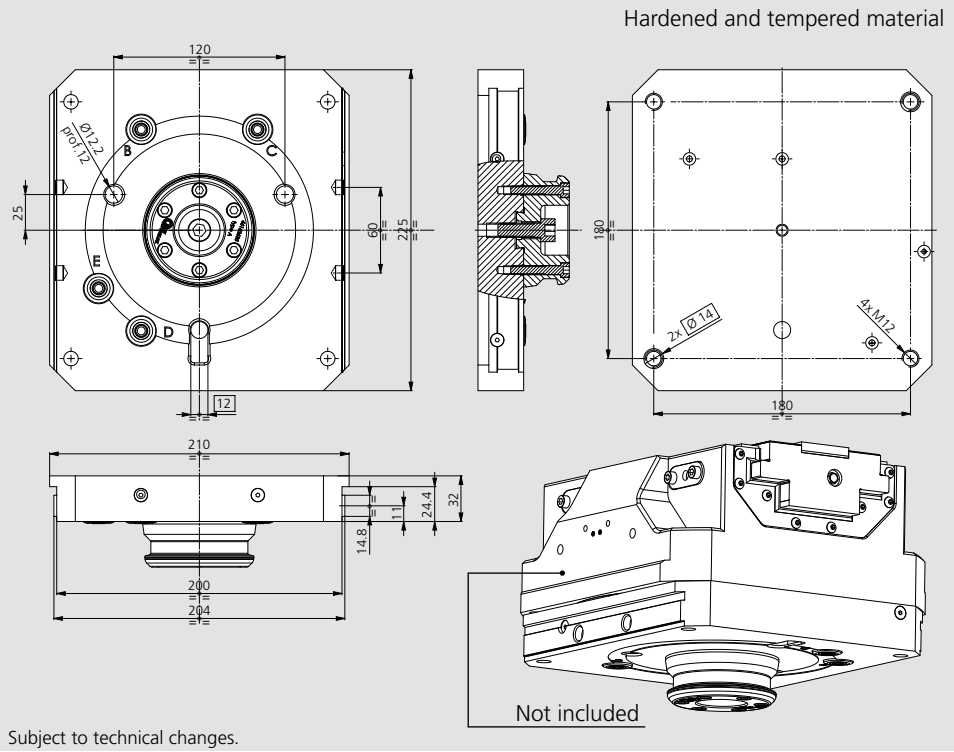

Type pallet (without vise)	Id. No.	Feedings to be used	Weight [kg]
Pallet holder 225STV 2-3 jaws with 4 feedings APS 190 loading robot	46200106	B-C-D-E	12
Pallet holder 225STV 2-3 jaws with 2 feedings APS 190 loading robot	46200108	B-C	12

The pallet is prepared for handling with robots.

See example nr. 3 page 42

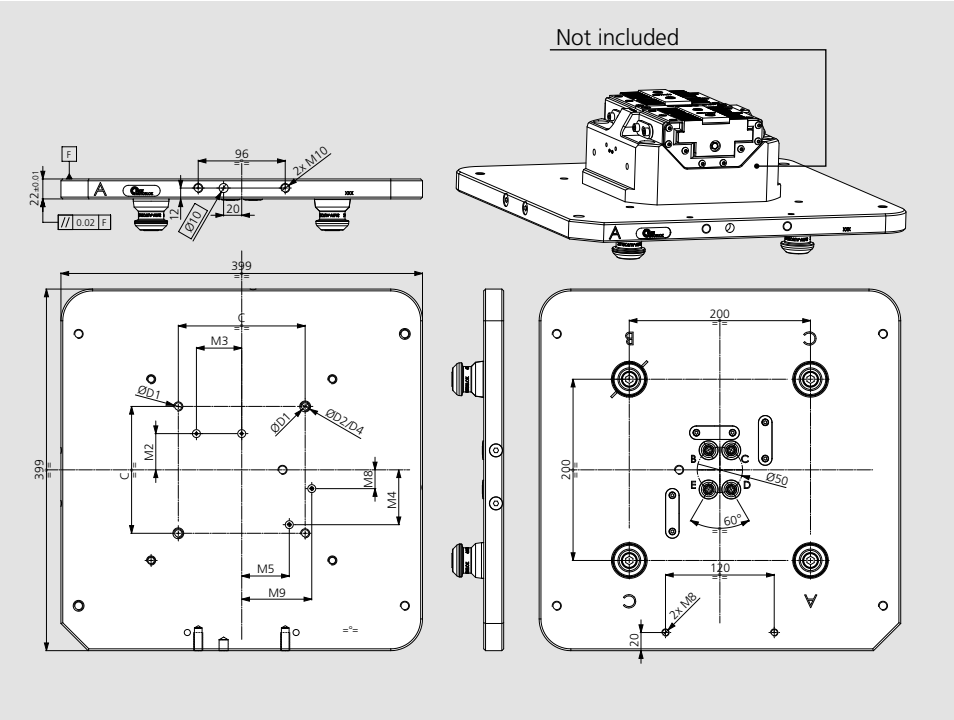

Subject to technical changes.

Type pallet (without vise)	Id. No.	Weight [kg]
Pallet Q400 prepared for 180 STV with feedings loading robot	46201111	28
Pallet Q400 prepared for 225 STV with feedings loading robot	46201101	28

APS 100

Zero Point clamping system

■ Combi unit

Application/customer benefits

- Pre-assembled clamping unit with 2 pieces APS 100 Premium
- Universal applicable
- Fast and easy set-up

Technical features

- 2 clamping slides
- Repeatability < 0.005 mm
- Turbo function to increase the pull-in forces up to 15 kN (pull-in force without Turbo 4 kN)
- Anti rotating protection
- Air cleaning

Standard equipment

Combi unit with 2 pieces APS 100 Premium

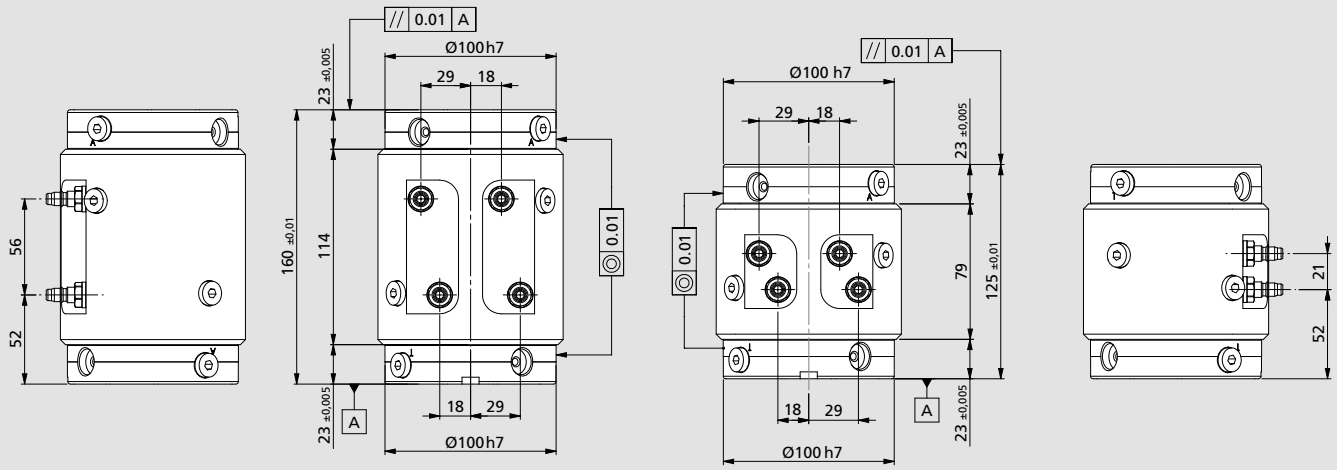

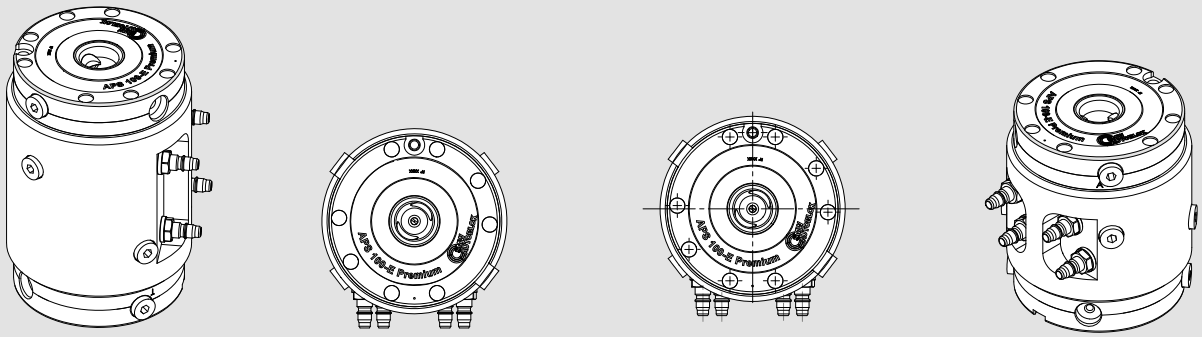

Subject to technical changes.

Type	Id. No.	Height [mm]	Weight [kg]
Combi unit with 2 pieces APS 100 Premium	460117	125	7
Combi unit with 2 pieces APS 100 Premium	460118	160	9

APS 140

Application/customer benefits

- Pre-assembled clamping unit with 2 pieces APS 140 Premium
- Universal applicable
- Fast and easy set-up

Technical features

- 3 clamping slides
- Repeatability < 0.005 mm
- Turbo function to increase the pull-in forces up to 26 kN (pull-in force without Turbo 7.5 kN)
- Air cleaning
- Anti rotation protection

Standard equipment

Clamping unit with 2 pieces APS 140 Premium

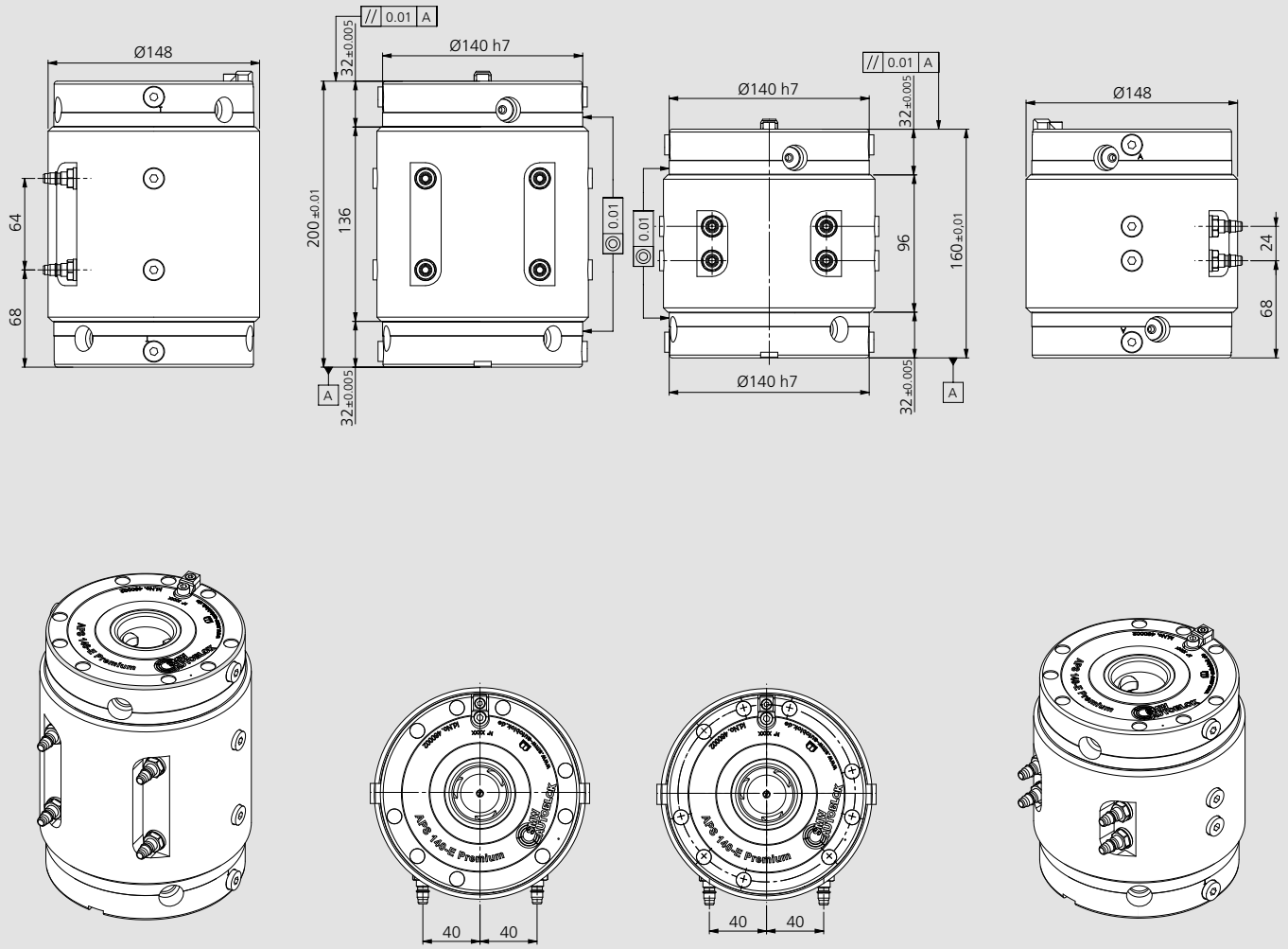

Subject to technical changes.

Type	Id. No.	Height [mm]	Weight [kg]
Combi unit with 2 pieces APS 140 Premium	460119	160	17
Combi unit with 2 pieces APS 140 Premium	460120	200	21

APS 100 / 140

Standard clamping pallets

Application/customer benefits

- Pre-assembled clamping pallet for APS 100 / 140
- Universal applicable
- Ready to use

Technical features

- Fully assembled
- Rust protected
- High quality steel (1.1730)

Standard equipment

1 clamping pallet: Fully assembled with 1 clamping pin (Type A), anti rotation key and hand grips
2 clamping pallet: Fully assembled with 1 clamping pin (Type A) and 1 clamping pin (Type B)
4 clamping pallet: Fully assembled with 1 clamping pin (Type A), 1 clamping pin (Type B), 2 clamping pins (Type C)
Rounded pallet: Fully assembed with with 1 clamping pin (Type A), 2 clamping pins (Type B), 2 clamping pins (Type C)

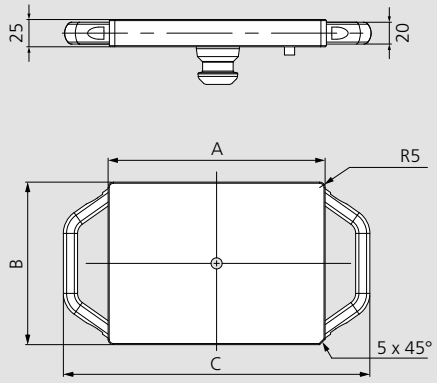

Subject to technical changes.

Type	Id. No.	A mm	B mm	C mm
Clamping pallet APS 100	46167721	149	149	231
Clamping pallet APS 140	46167722	199	149	281

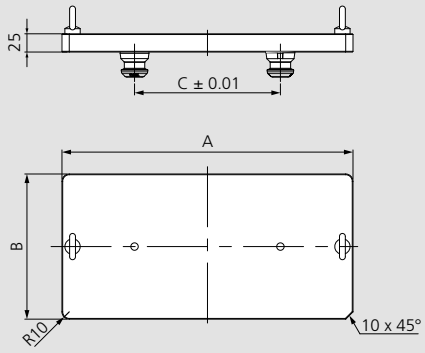

Subject to technical changes.

Type	Id. No.	A mm	B mm	C mm
Clamping pallet APS 140	46167724	399	199	200

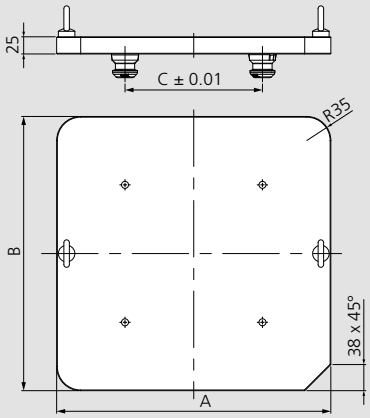

Subject to technical changes.

Type	Id. No.	A mm	B mm	C mm
Clamping pallet APS 140	46167726	399	399	200

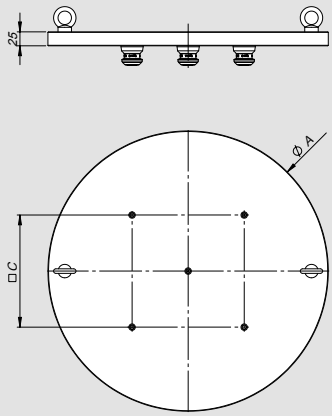

Subject to technical changes.

Type	Id. No.	A (ø) mm	C mm
Clamping pallet APS 140	46167728	500	200

Customer request data

- required for the preparation of the offer
- Simply fill in and send to: omlspa@omlspa.it

APS

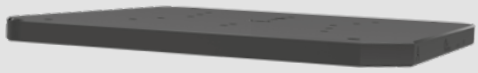

Application/customer benefits

- Customized clamping pallets
- Short delivery times
- Usable for any machine or application
- Rust protected by means of burnishing

Technical features

- High quality steel (1.1730)

Standard equipment

Customized clamping pallet with transport screws
Fully assembled with APS clamping pins on request

Customized clamping pallets

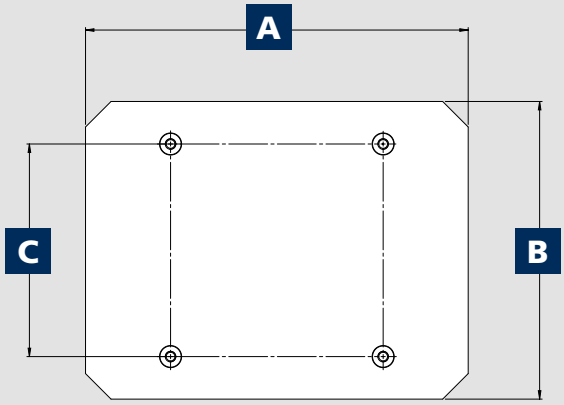

Dimensions	
A	
B	
C	

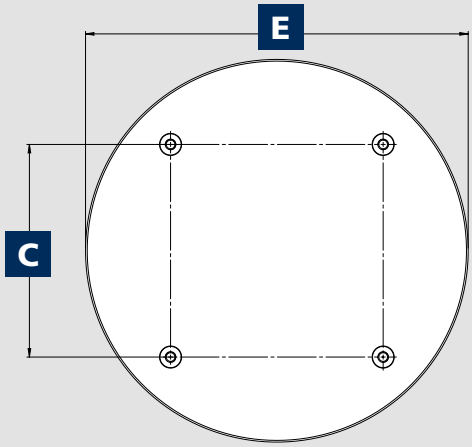

Dimensions	
C	
ØE	

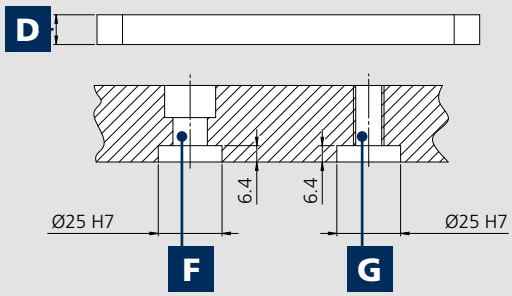

Dimensions		
D		
F	☐ M12	☐ M16
G	☐ M10	☐ M12

APS 140

High quality clamping pallet

■ Basic
■ Premium

Application/customer benefits

- Pre-assembled clamping pallet for APS 140
- Universal applicable
- 2 Versions: Premium and Basic

Technical features

- Grid dimension 200 mm
- Fully assembled including clamping pins
- Premium version with additional adaption for module units
- Rust protected

Standard equipment

Clamping pallet fully assembled with
1 centering pin (type A),
1 reference pin (type B)

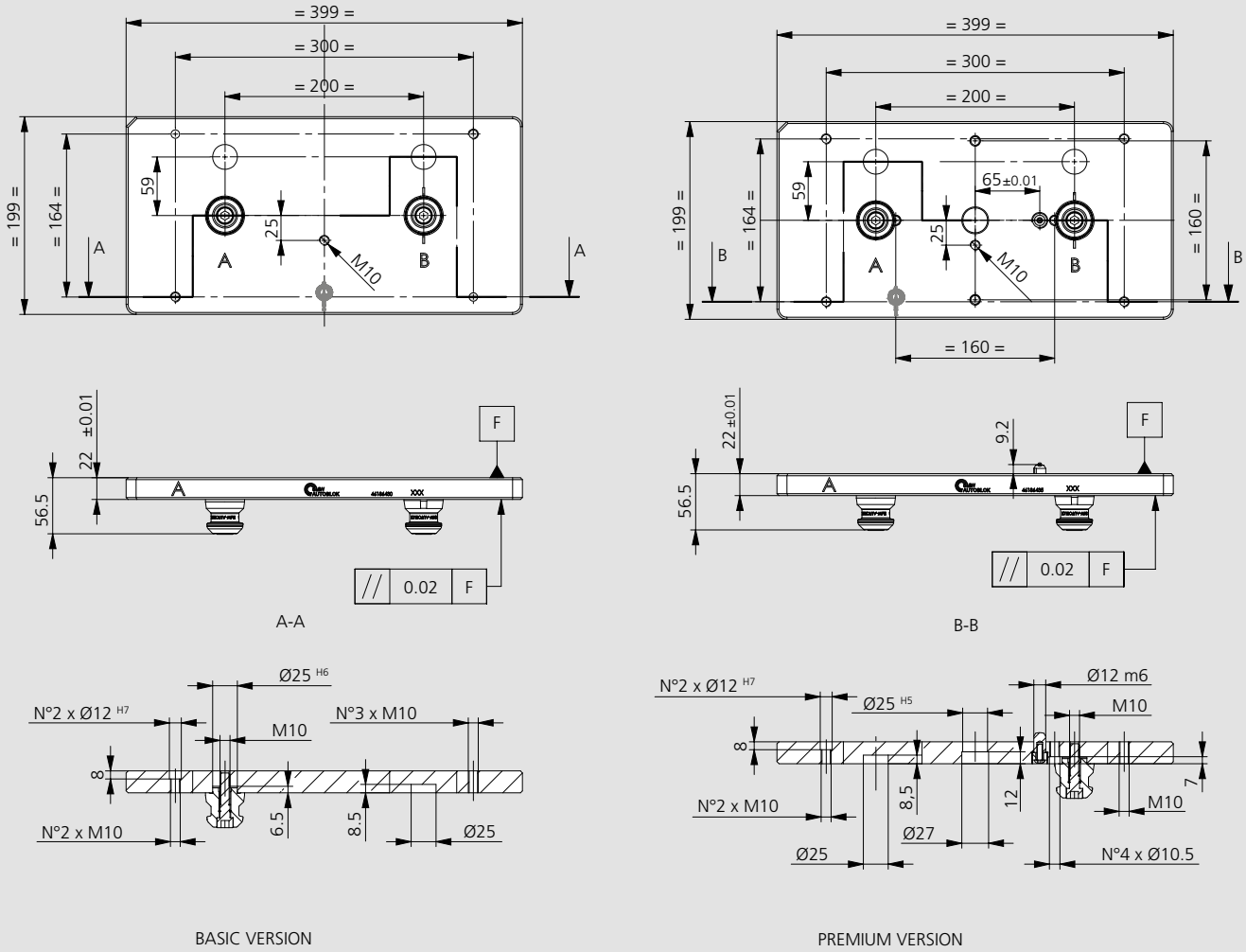

Subject to technical changes.

Type	Id. No.
Clamping pallet APS 140 Premium	46186435
Clamping pallet APS 140 Basic	46186430

High quality clamping pallet

APS 140

■ Basic
■ Premium

Application/customer benefits

- Pre-assembled clamping pallet for APS 140
- Universal applicable
- 2 Versions: Premium and Basic

Technical features

- Grid dimension 200 mm
- Fully assembled including clamping pins
- Premium version with additional adaption for module units
- Rust protected

Standard equipment

Clamping pallet fully assembled with
1 centering pin (Type A),
1 reference pin (Type B),
2 clamping pins (Type C)

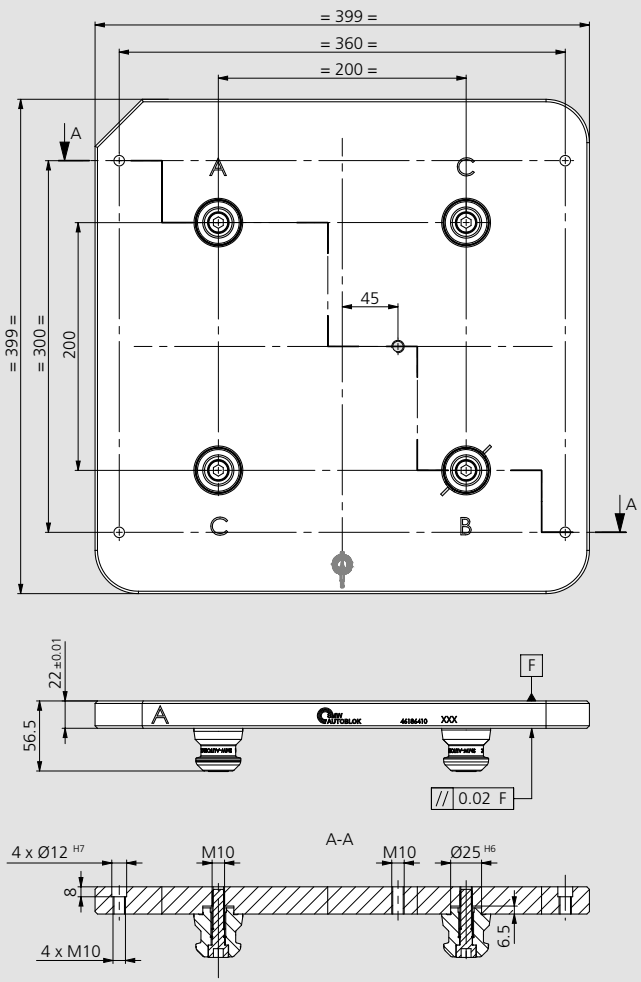

BASIC VERSION

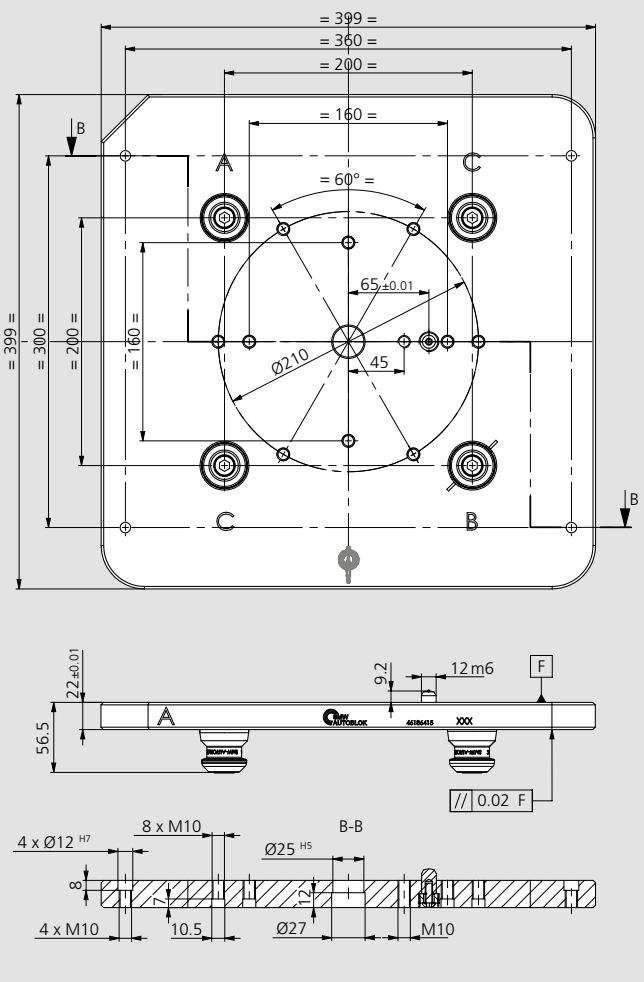

PREMIUM VERSION

Subject to technical changes.

Type	Id. No.
Clamping pallet APS 140 Premium	46186415
Clamping pallet APS 140 Basic	46186410

Q400

Clamping Pallet Q400

■ **Pallet prepared for mounting SGSF chuck**

This pallet is prepared
for loading with robots.

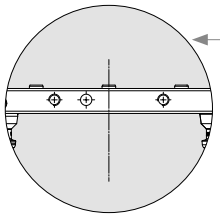

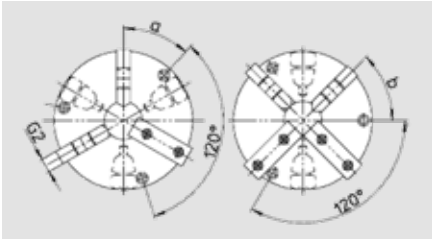

Chuck type SGS-SGSF		200-55	250-76	315-103
Front thread 3+3		33031220	33031225	33031231
Front thread 4+4		33033220	33033225	33033231
	Set-3 GRC	03652030	03652530	03653130
	Set-4 GRC	03652040	03652540	03653140
	Set-3 Soft jaws	03602030	03602530	03603130
	Set-4 Soft jaws	03602040	03602540	03603140

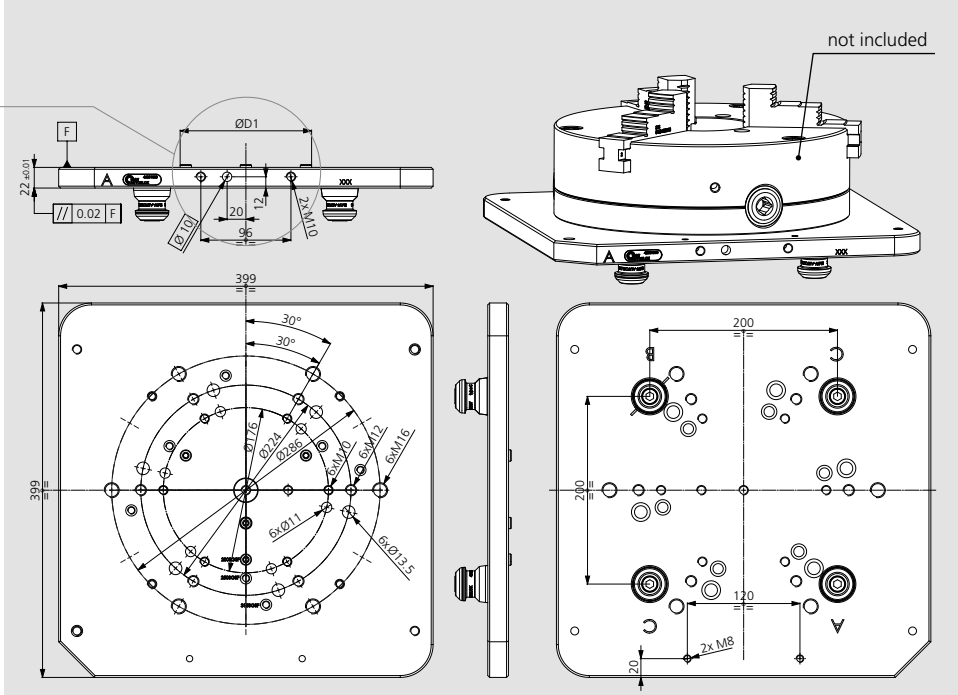

Subject to technical changes.

Type pallet (without chuck)	Id. No.	Weight [kg]	Manual chucks SGSF (optional)	
			Ø D1	Chuck model
Pallet Q400 prepared for chucks 200-250-315 SGSF handling robot	46201020	28	159.9	200 SGSF
			199.9	250 SGSF
			259.9	315 SGSF

Q400

Clamping Pallet Q400

■ **Pallet prepared for mounting HG-N chucks**

This pallet is prepared
for loading with robots.

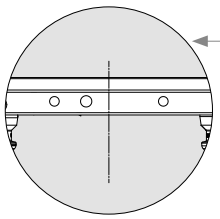

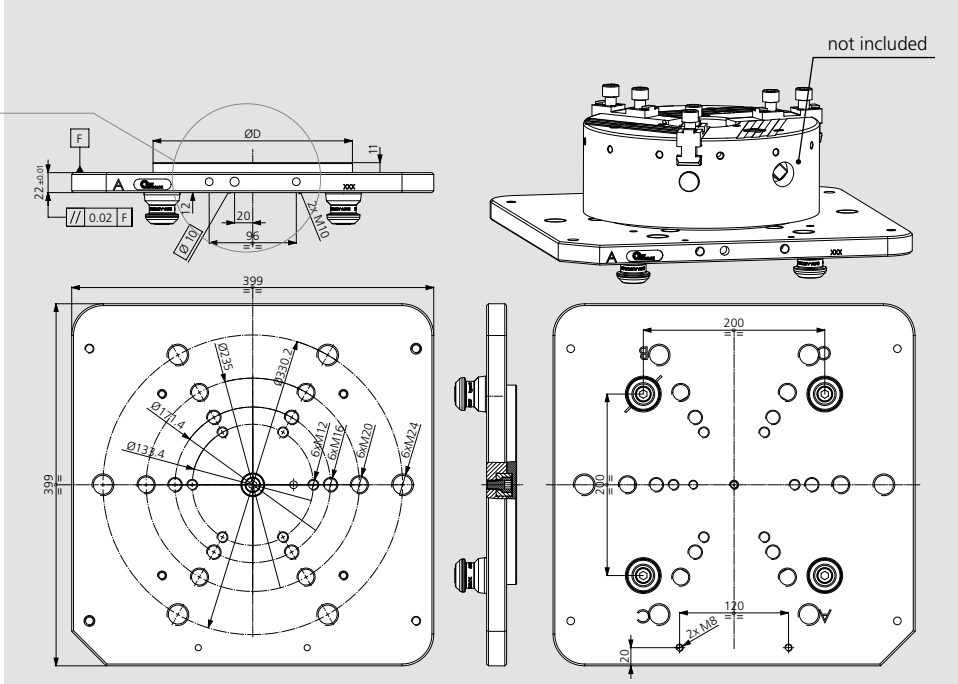

Subject to technical changes.

Type pallet (without chuck)	Id. No.	ØD	Weight [kg]
GRP pallet Q400 + mounting D220 AUTC 260HG loading robot	46201012	219.7	30
GRP pallet Q400 + mounting D300 AUTC 315HG loading robot	46201013	299.7	32
GRP pallet Q400 + mounting D380 AUTC 400-500HG manual loading	46201014	379.7	36

Clamping pallet for automation with MC150x200 vises
■ Pallet prepared for mounting 1 vise

4 APS 140

This pallet is **not** prepared for handling with robots.

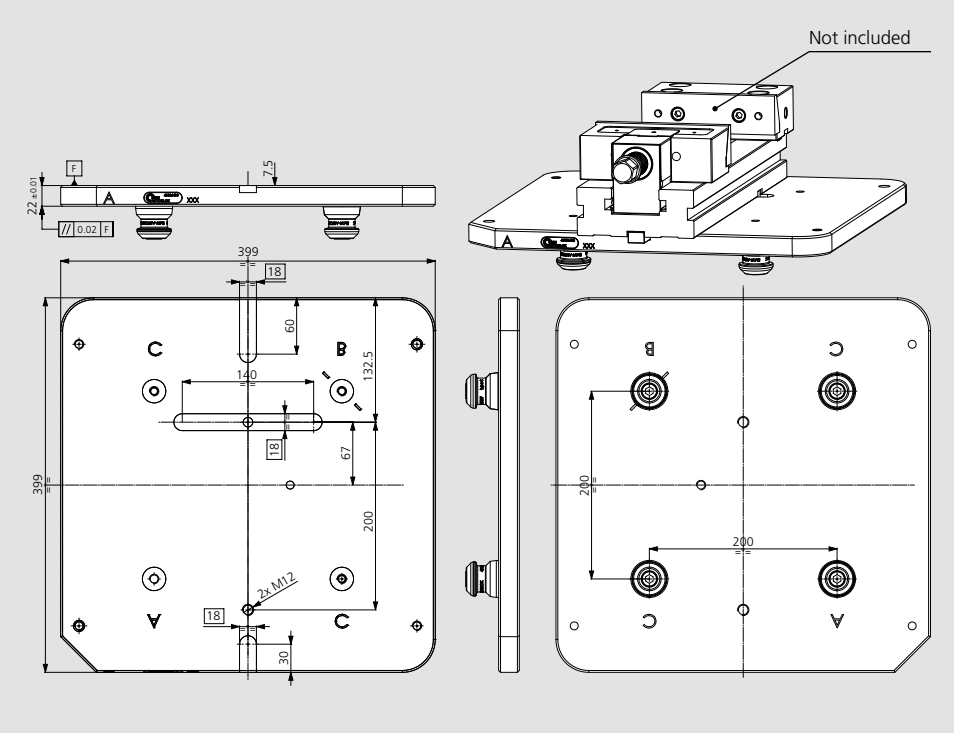

Subject to technical changes.

Type pallet (without vise)	Id. No.	Weight [kg]
Pallet Q400 prepared for 1 vise MC150x200 manual loading	41702271	28

Clamping pallet for automation with MC150x200 vises
■ Pallet prepared for mounting 2 vises

4 APS 140

This pallet is prepared for handling with robots.

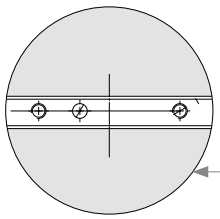

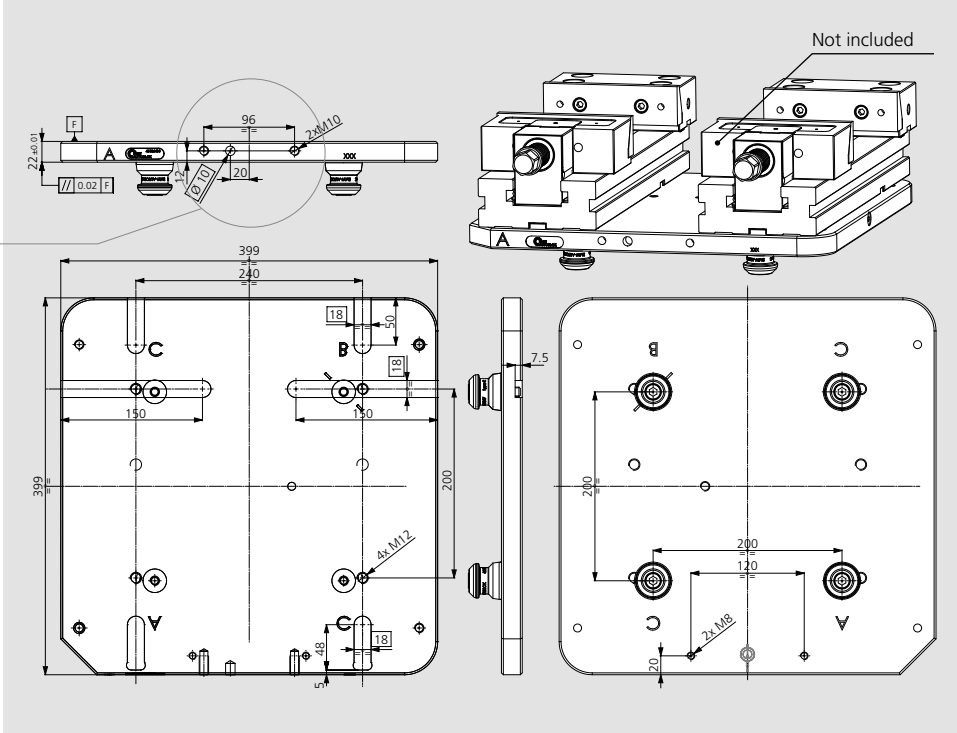

Subject to technical changes.

Type pallet (without vise)	Id. No.	Weight [kg]
Pallet Q400 prepared for 2 vises MC150x200 robot loading	41702261	28

APS 100 / 140

Zero Point clamping system

■ Spacer for Combi units

Application/customer benefits

- Spacers to adapt more different module units
- Universal use

Technical features

- Height 20 mm

Standard equipment

Spacer without clamping pin

46168371

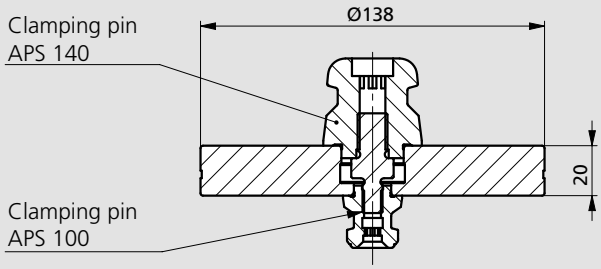

46168366

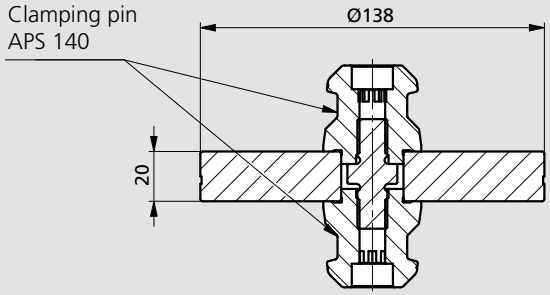

46168370

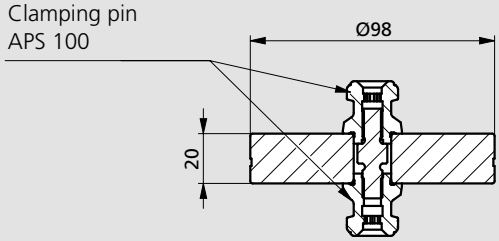

Type	Id. No.	Height [mm]	Weight [kg]
Spacer H20 APS 140-100	46168371	20	2.2
Spacer H20 APS 140-140	46168366	20	2.3
Spacer H20 APS 100-100	46168370	20	1.1

Application examples

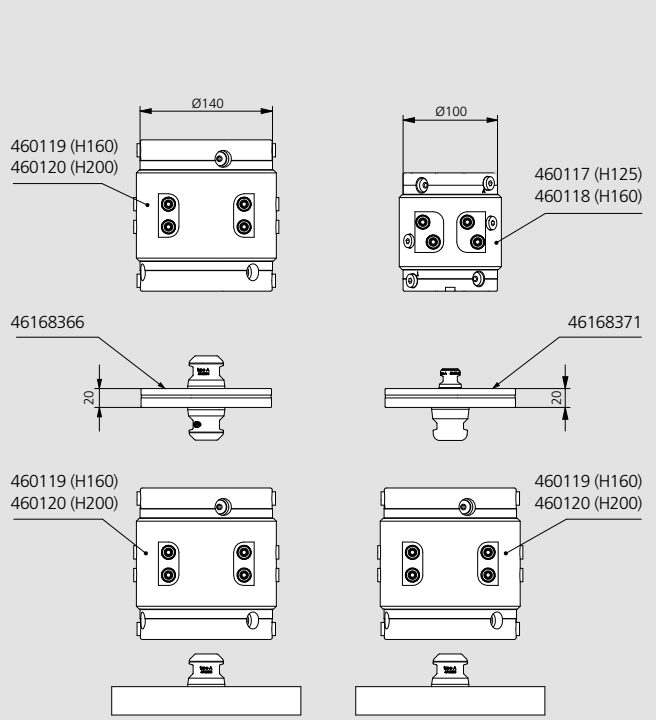

Subject to technical changes.

Multi-Slot screw for the positioning of clamping units

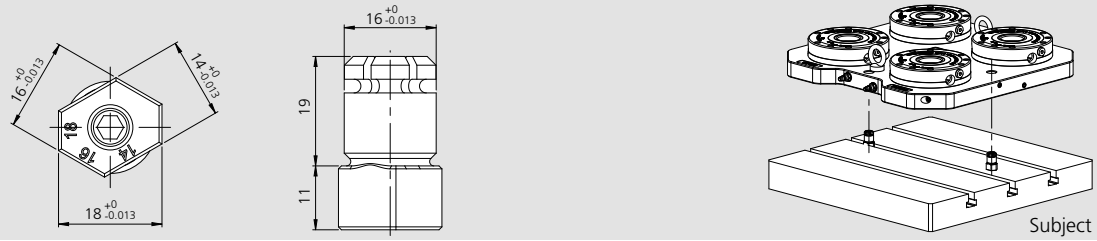

Subject to technical changes.

Type	Id. No.
Multi-Slot 14 / 16 / 18	71290182

Protection cover for screws for APS modules

Subject to technical changes.

Type	Id. No.
APS 100	46162129*
APS 140	46162309*
APS 160	46162609*
APS 190	46162609*
APS 250	46165109*

* The Id. No. refers to one single piece.

Air connection - Protection cover quick connection 1/8“

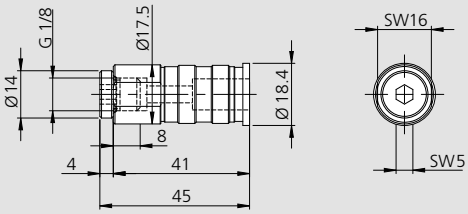

Subject to technical changes.

Type	Id. No.
APS 100 / 140	46167019*

* For all models. Must not be used in rotation.

Air connection - Quick fitting female 1/8“

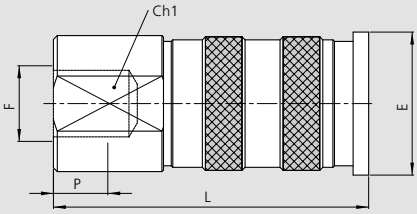

Subject to technical changes.

Type	Id. No.	Ø E	F	L	P
APS 100 / 140	71612801*	18.8	G1/8	42	7

* For all models. Must not be used in rotation.

Air connection - Quick fitting male 1/8“

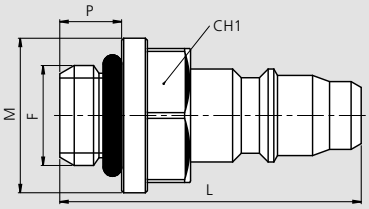

Subject to technical changes.

Type	Id. No.	F	L	Ø M	P
APS 100 / 140	71612802*	G1/8	29.3	15	6

* For all models. Must not be used in rotation.

Keys

Keys kit for all APS models
Orientation keys for APS Premium

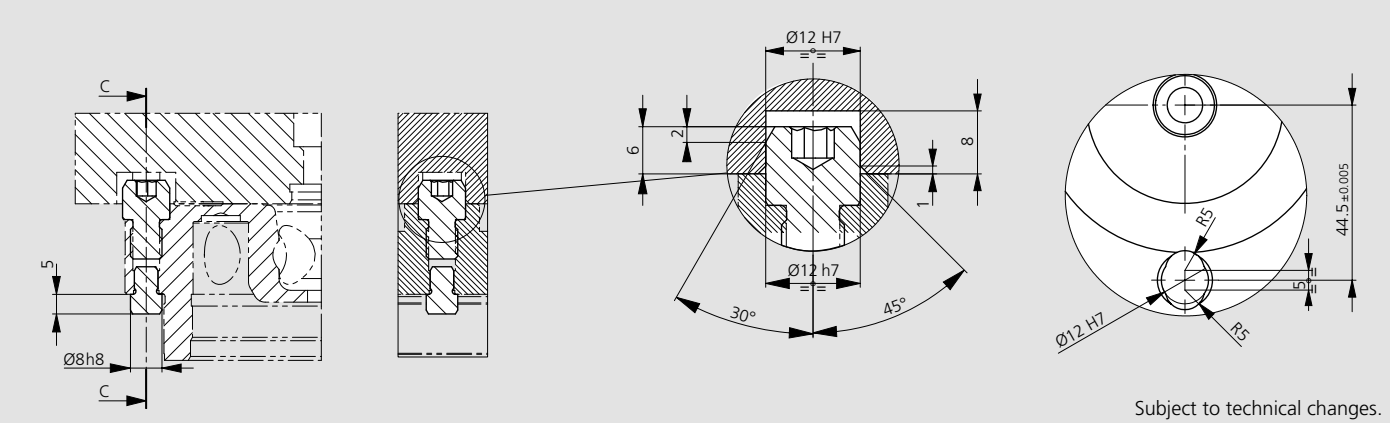

Subject to technical changes.

Id. No.
46162133 - Key kit for APS 100

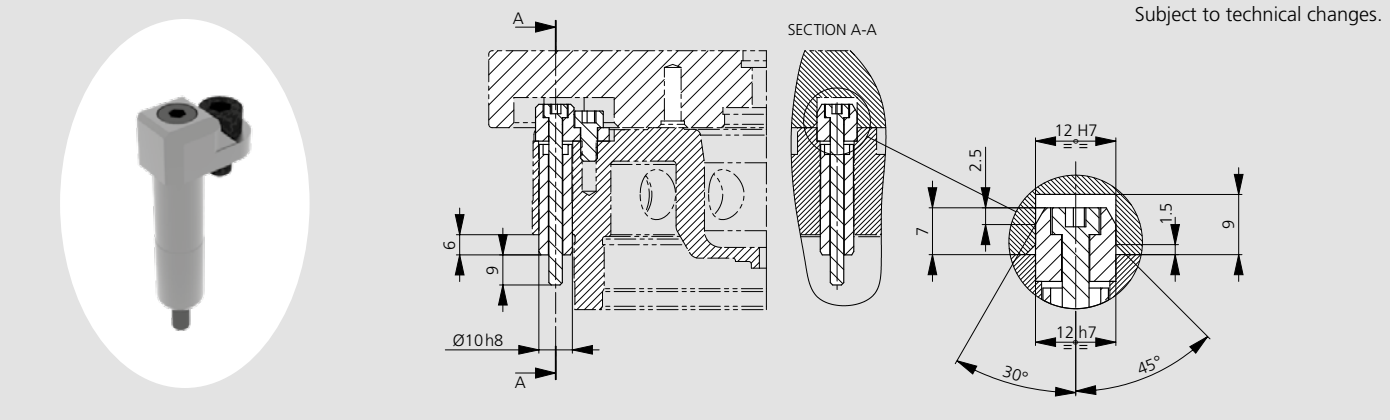

Subject to technical changes.

Id. No.
46162333 - Key kit for APS 140E / APS 190E
46162335 - Key kit SMF 12,5 APS 140E / APS 190E

Covers

Magnet protection covers for all APS models

For Basic / Premium Light module

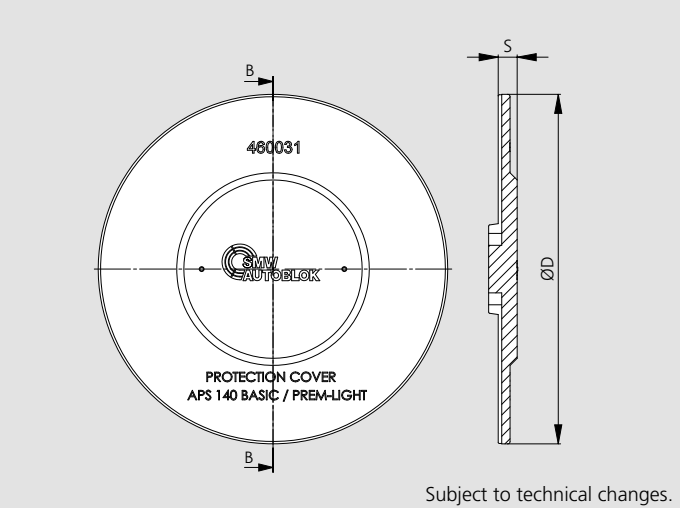

Subject to technical changes.

Id. No.	Model	S	ØD	Weight
460031*	Protection cover with magnet APS 140 Basic	8	147	0.8 kg
46165730*	Protection cover with magnet APS 160 Basic	8	167	1 kg

For Premium module

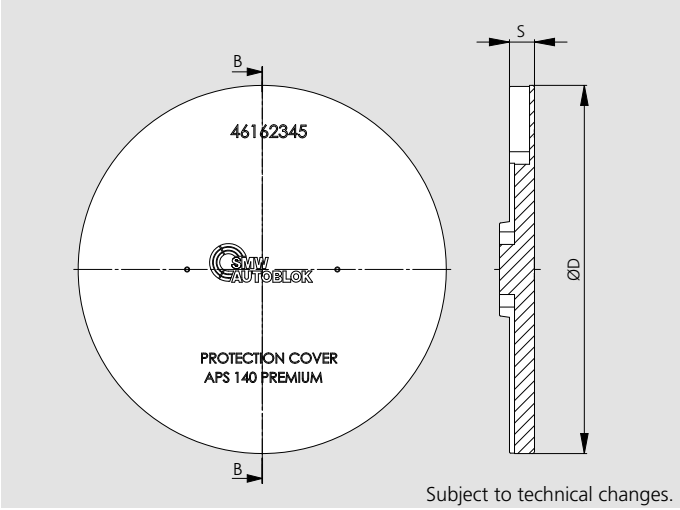

Subject to technical changes.

Id. No.	Model	S	ØD	Weight
460030*	Protection cover with magnet APS 100 Premium	8	107	0.45 kg
46162345**	Protection cover with magnet APS 140 Premium	10	147	0.45 kg
46162625**	Protection cover with magnet APS 190 Premium	10	197	0.85 kg
46165033**	Protection cover with magnet APS 250 Premium	10	257	1.5 kg

*Steel **Aluminium

Pair of clamps (to clamp plates on the machine table from lateral sides)

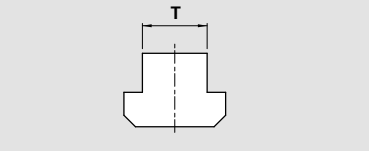

Consisting of:
Pair of clamps incl. T-nut and screw

Type	Id. No.					
T	12 mm	14 mm	16 mm	18 mm	20 mm	22 mm
APS	58042792	58042793	58042794	58042795	58042796	58042797

Pre-centering

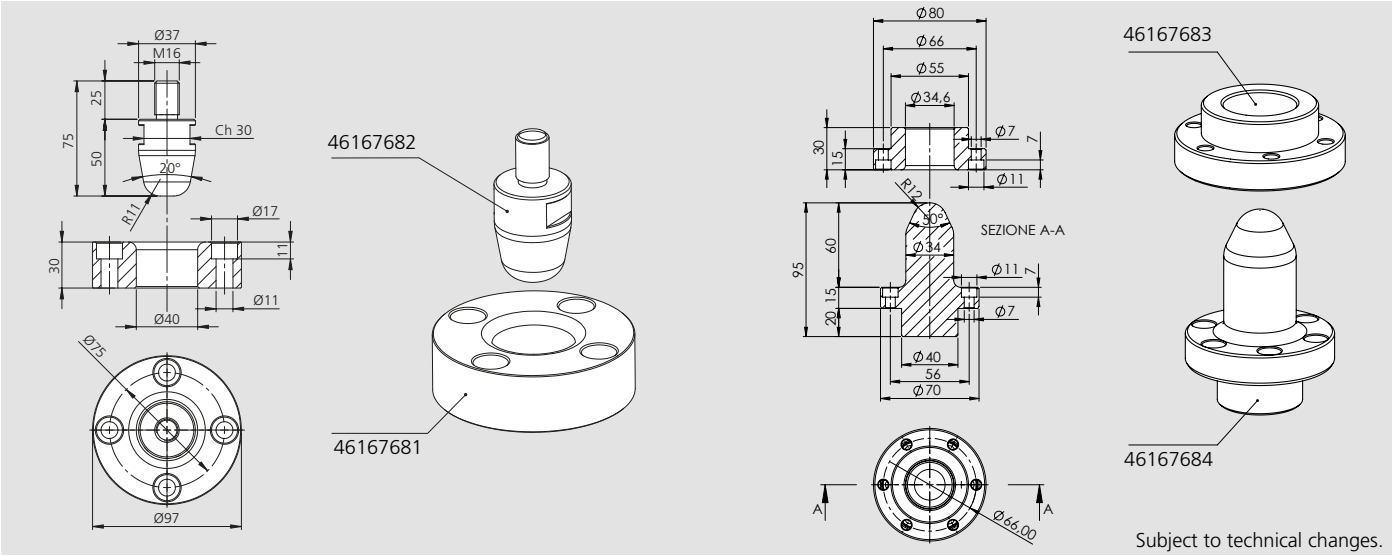

Subject to technical changes.

Interface plate for TCi / MCi 150 on APS 140

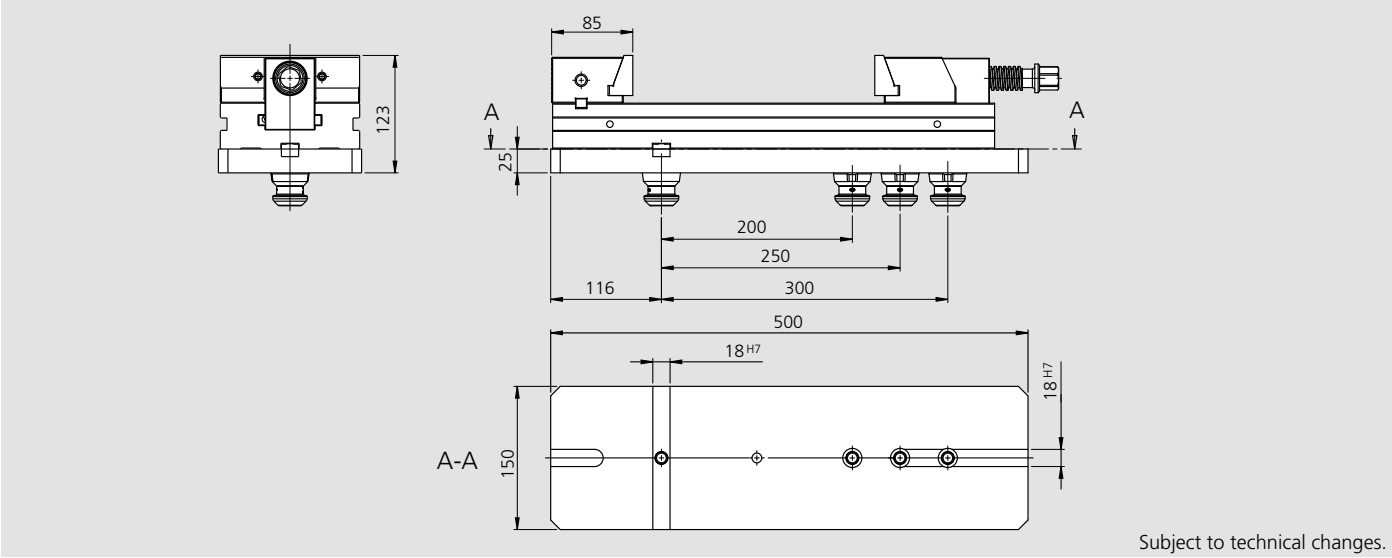

Subject to technical changes.

Type	Id. No.	Weight [kg]
Interface plate for TCi / MCi 150 on APS 140	46167710	14

Note: 2 pieces (1 Type A, 1 Type B) clamping pins included.

APS 140

Zero point clamping system

- Dimensions of standard adaptation
- Manufacturing tolerances

Dimensions of standard adaptation for machine tools pallet

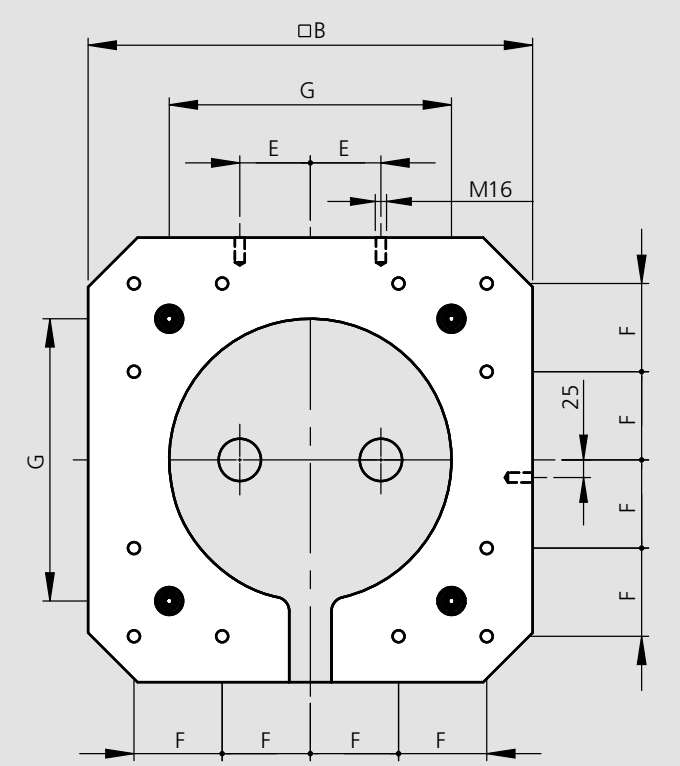

Subject to technical changes.

B [mm]	E [mm]	F [mm]	G [mm]
400	55	80	250
500	75	100	300
630	100	125	420

Manufacturing tolerances

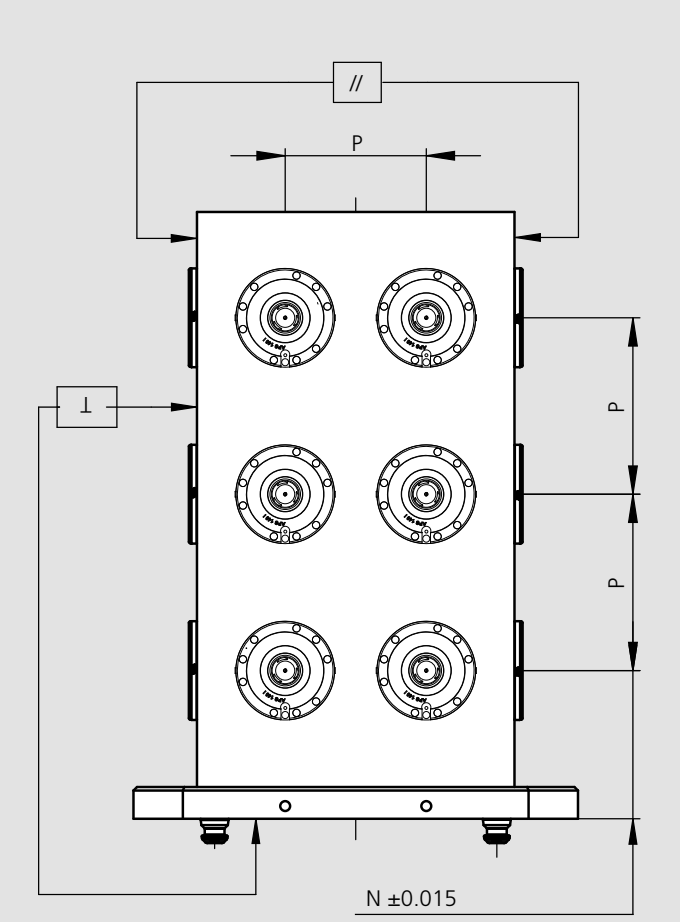

Subject to technical changes.

⊥	//	P
0.02 / 0.035	0.03 / 0.05	± 0.01 / ± 0.02
500 / 1000	500 / 1000	200 / 300

Application examples (Tombstone dimensions, type and number of modules are made according to customer specifications)

Tombstone with 8 APS modules

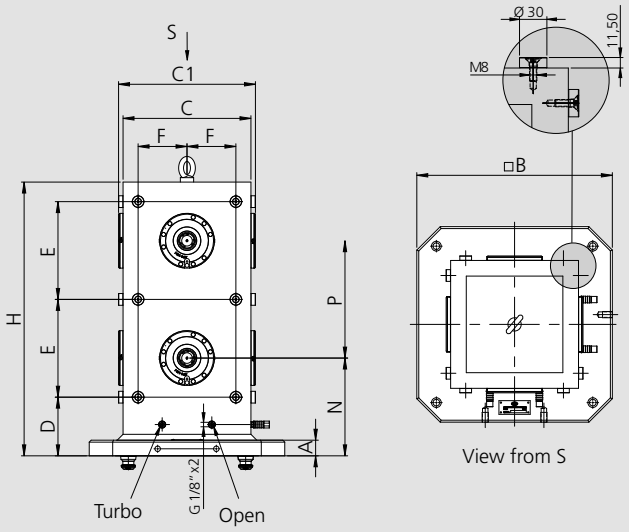

Subject to technical changes.

Tombstone with 24 APS modules

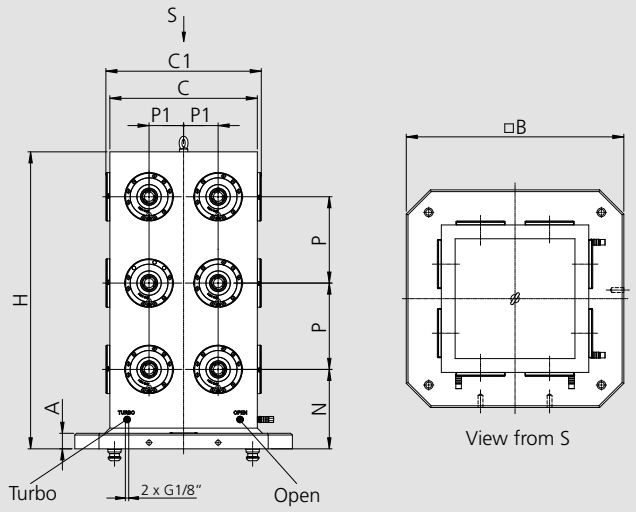

Subject to technical changes.

Tombstone with 12 APS modules

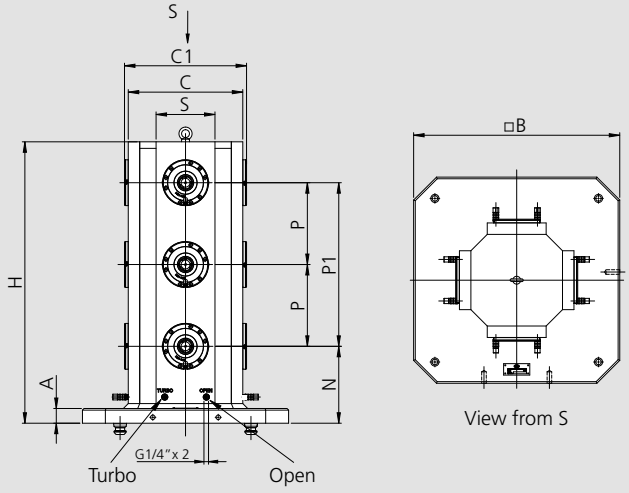

Subject to technical changes.

Tombstone with 6 APS modules

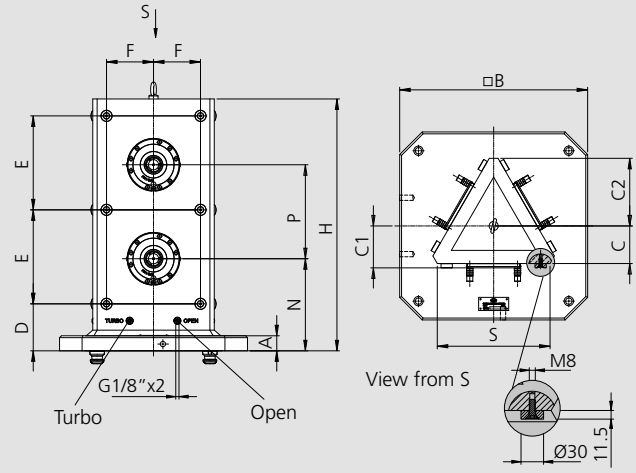

Subject to technical changes.

Crankweb with 8 APS modules

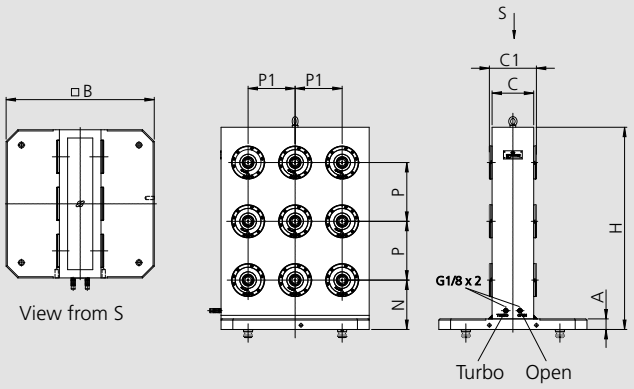

Subject to technical changes.

Tombstones

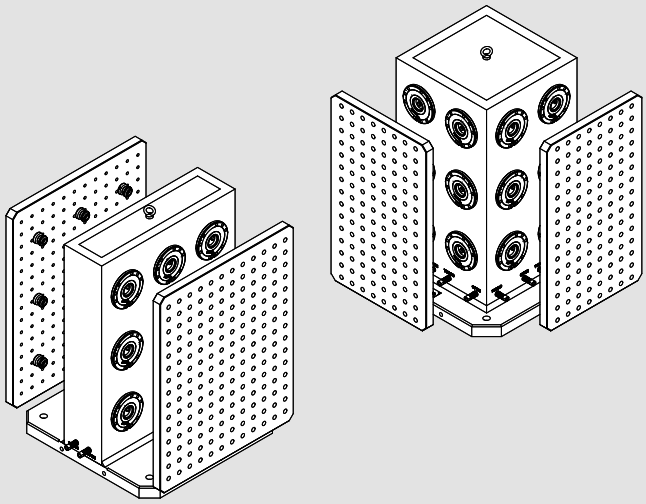

Subject to technical changes.

APS

Tombstones and crankwebs on customer request

- Request form
- Simply fill in and send to Sales Dept.: omlspa@omlspa.it

Tombstones

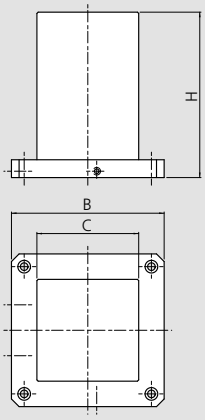

Technical data	
B	mm
C	mm
H	mm

Number of modules	
Modules type	

PREMIUM E open - Turbo	
PREMIUM LIGHT I open - Turbo	
BASIC open	

Cross Tombstones

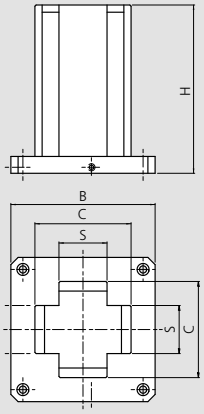

Technical data	
B	mm
C	mm
S	mm
H	mm

Number of modules	
Modules type	

PREMIUM E open - Turbo	
PREMIUM LIGHT I open - Turbo	
BASIC open	

Triangular Tombstones

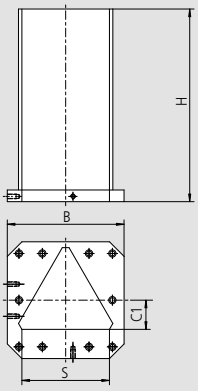

Technical data	
B	mm
C1	mm
S	mm
H	mm

Number of modules	
Modules type	

PREMIUM E open - Turbo	
PREMIUM LIGHT I open - Turbo	
BASIC open	

Crankwebs

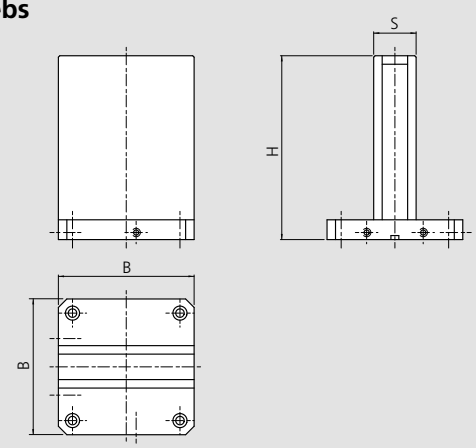

Technical data	
B	mm
S	mm
H	mm

Number of modules	
Modules type	

PREMIUM E open - Turbo	
PREMIUM LIGHT I open - Turbo	
BASIC open	

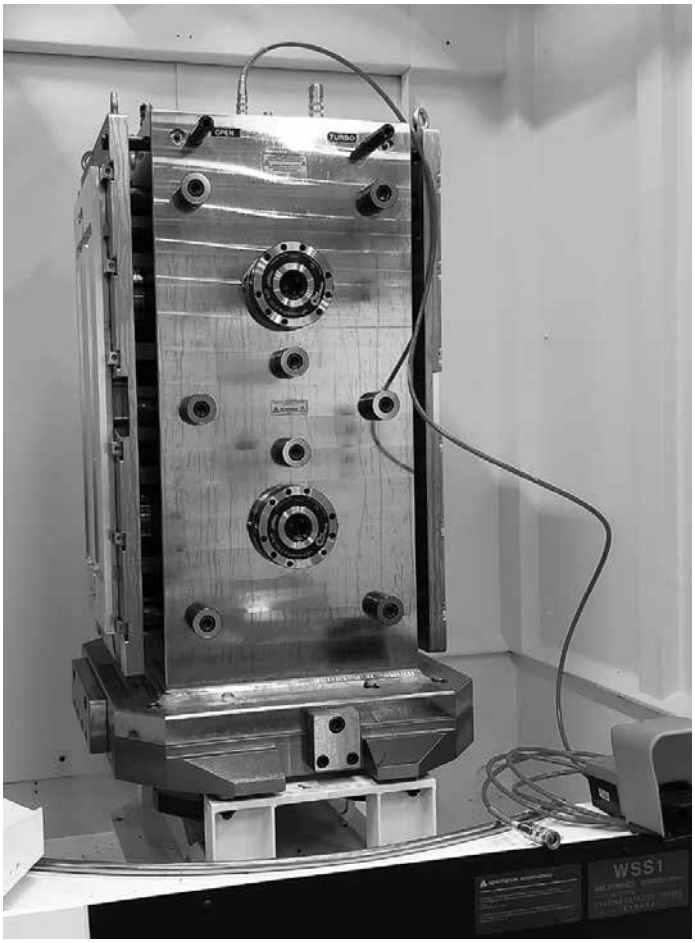
WSS1

T-nuts set

for clamping unit APS and height extension APS

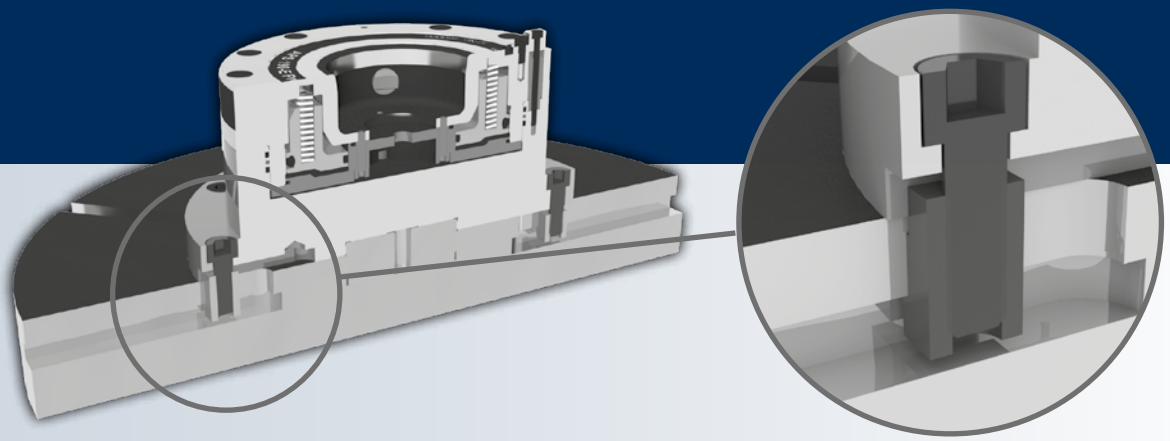

1 Set 9 T-nuts - 12-M10 for clamping unit 4 APS 140

▶ T-SLOT 12
46204100

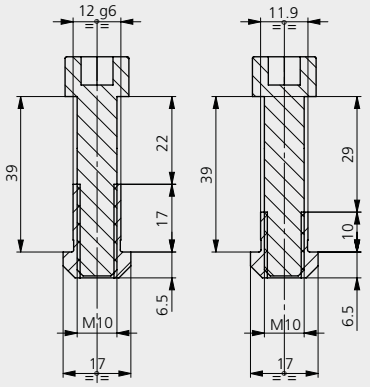

▶ T-SLOT 14
46204101

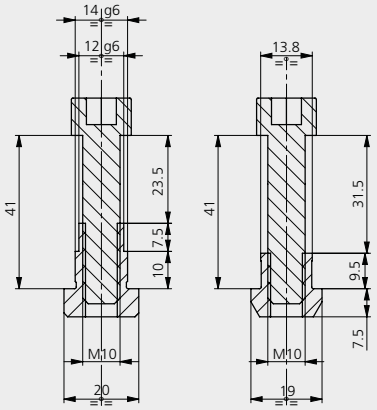

▶ T-SLOT 18
46204102

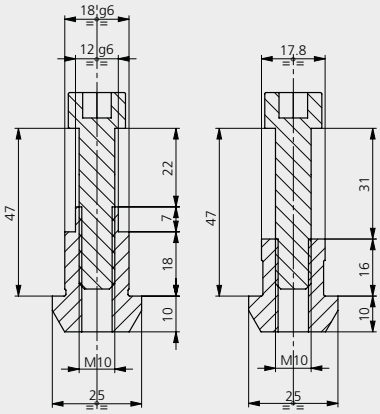

2 Set 8 T-nuts - 12-M10 for height extension APS

▶ T-SLOT 12
46204103

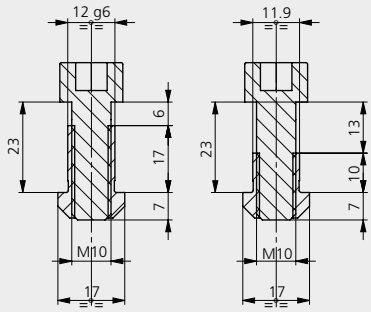

▶ T-SLOT 14
46204104

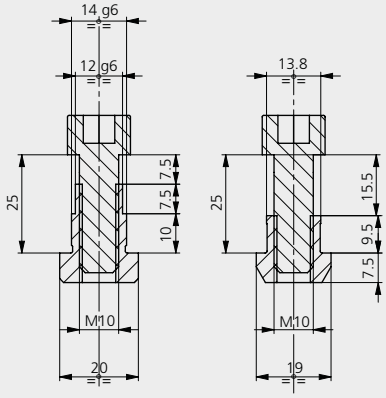

▶ T-SLOT 18
46204105

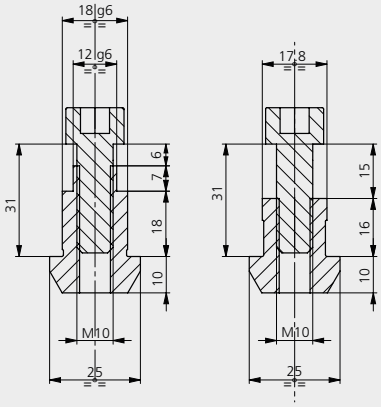

Application/customer benefits

- Smart, easy and accurate solution for large plates
- Any dimension of plates for machine tool tables possible
- Safe and reliable connection between the plates
- Maintenance free
- Large entry radius of the clamping pins for easy and safe loading

Technical features

- Sealed connecting element
- Media feed trough the connecting element

Connecting element for media transfer

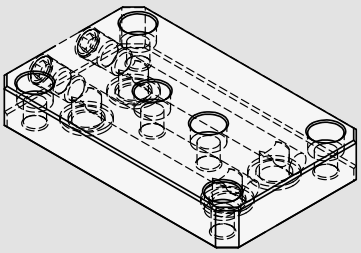

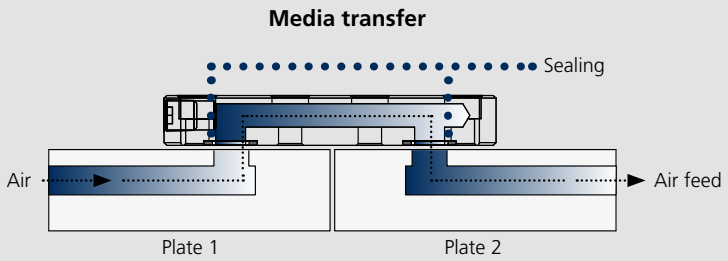

Subject to technical changes.

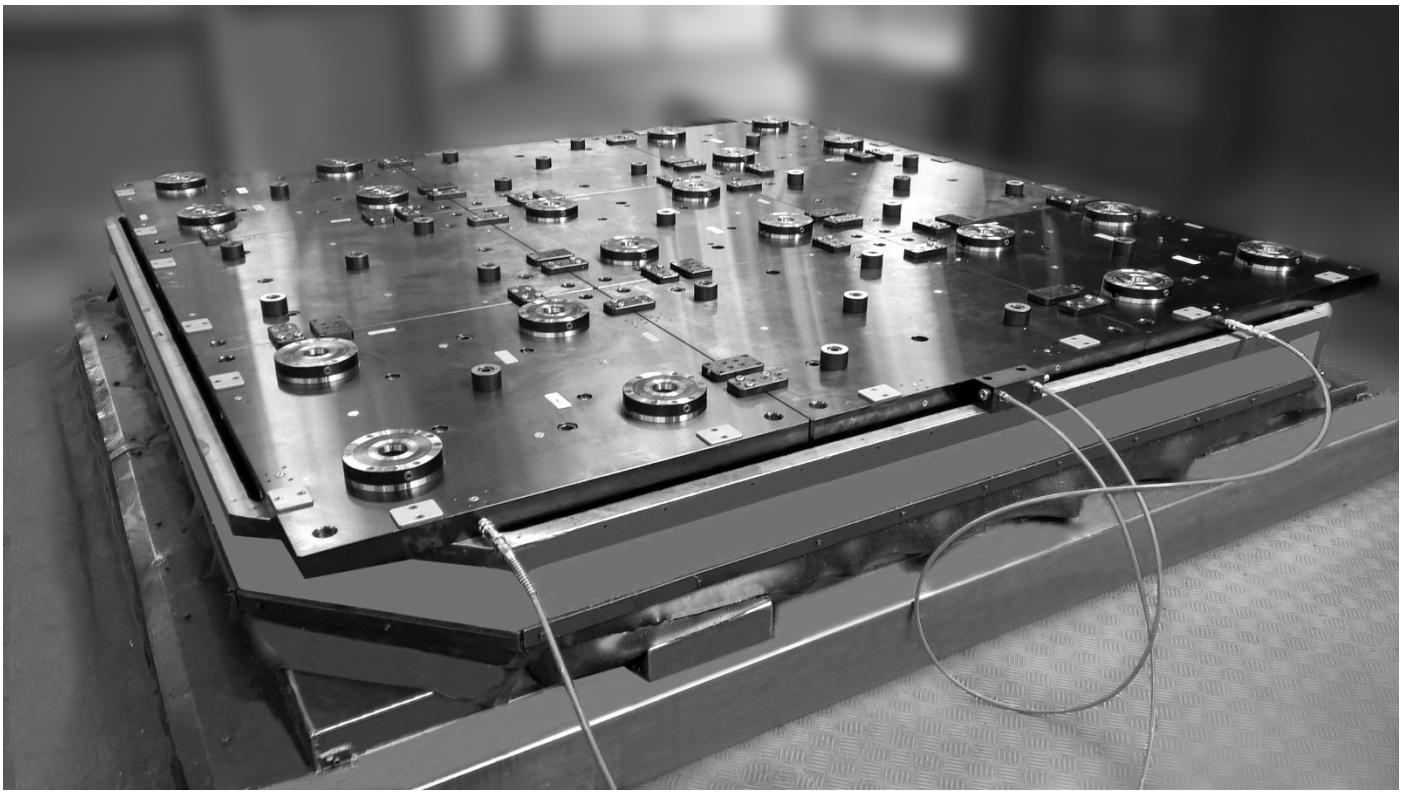

APS Setting Table

SERIES 800

1 Functional Overview of the setting table

- Accurate to within 0.010
- Rotation speed variable between 0 and 3 r.p.m.
- Hand set jogging function with 3 speed selections
- Reduce set up time for loading component to fixture & fixture to machine
- Safety pull chord

Customized setting tables
for fixture & fixture to machine

SERIES 1200

Model	Table sizes	Max. swing	Max. weight of fixture plate & component	r.p.m.	Voltage
SERIES 800	Ø 800	Ø 1100	1500 kg	0 - 3	220, 240, 380 - 480V
SERIES 1200	Ø 1200	Ø 1700	2000 kg	0 - 3	220, 240, 380 - 480V

Manual pallet exchange or with robot

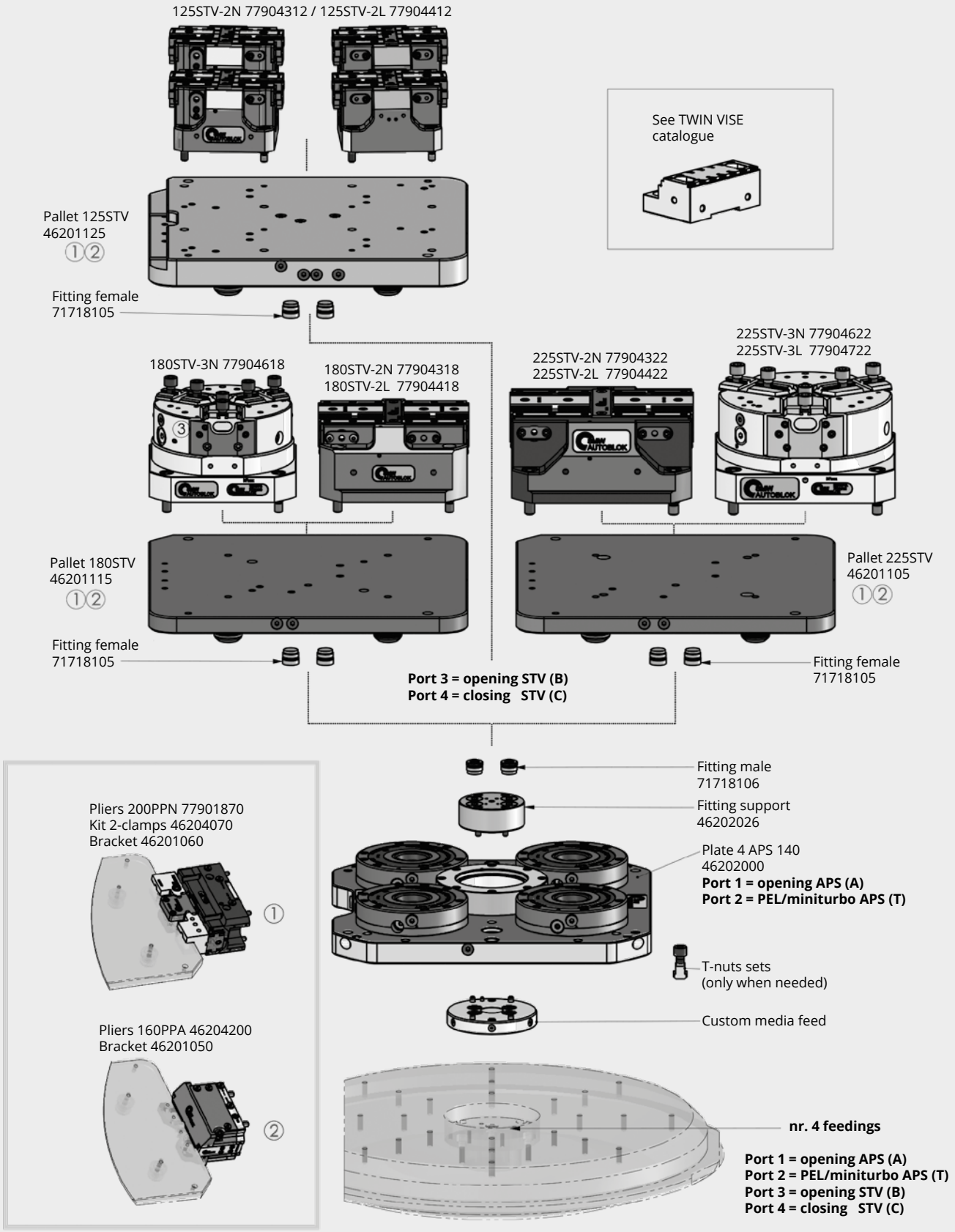

Manual pallet exchange or with robot

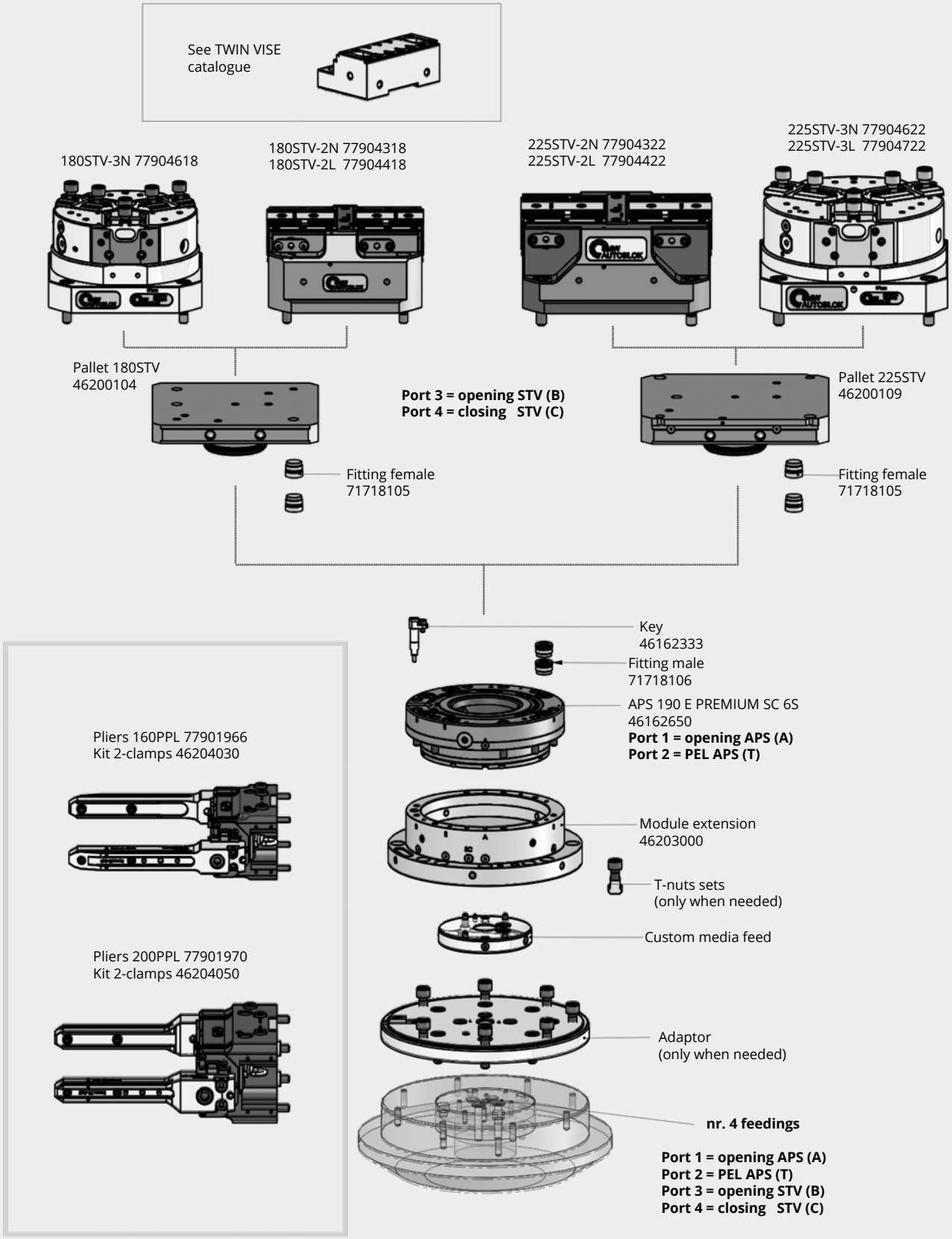

NOTES

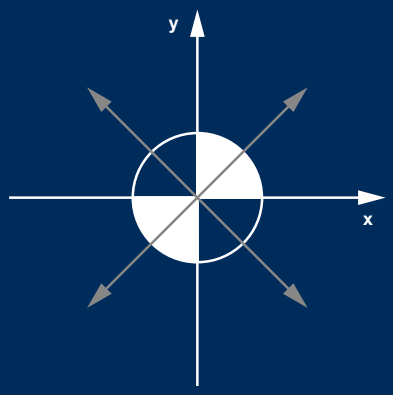

PLUS5

MECHANICAL ZERO POINT SYSTEM

Pag. 0.1.4

PLUS 5 - 52
Plus 5 - Mechanical Zero Point system

Pag. 0.1.5

PLUS 5 - 96
Plus 5 - Mechanical Zero Point system

Pag. 0.1.6

PLUS 5 ALL IN ONE 52/96
Plus 5 Plus 5 All in One
Mechanical Zero Point system

Pag. 0.1.7

PLUS 5 INDEX - 52
Plus 5 Index- Mechanical Zero Point system

Pag. 0.1.8

PLUS 5 INDEX - 96
Plus 5 Index- Mechanical Zero Point system

Pag. 0.1.9

PLUS 5 INDEX ALL IN ONE 52/96
Plus 5 Plus 5 All in One
Mechanical Zero Point system

Pag. 0.1.10

PLUS 5 - 52
PLUS 5 - 96
Clamping plate

Pag. 0.1.14

PLUS 5 - 52
Interface 96

Pag. 0.1.15

PLUS 5 - 52/96
Reduction plates

Pag. 0.1.16

PLUS 5 - 52/96
Clamping pins

Pag. 0.1.18

PLUS 5 - 52/96
Pallet interface plate

Pag. 0.1.19

PLUS 5 - 52/96
Plates

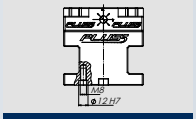
Pag. 0.1.20

PLUS 5 - 52/96
Risers

Pag. 0.1.21

PLUS 5 - 52/96
Alu pyramid

Pag. 0.1.22

PLUS 5 - 52
PLUS 5 - 96
Tiltings

Pag. 0.1.24

PLUS 5 - 96
Multiple tilting

Pag. 0.1.25

PLUS 5 - 52/96
- Safety plate
- Alignment plate

Pag. 0.1.26

PLUS 5 - 52
Tombstone

Pag. 0.1.27

PLUS 5 - 96
Tombstone

Pag. 0.1.28

PLUS 5 - 52/96
Accessories

PLUS5

MECHANICAL ZERO POINT SYSTEM

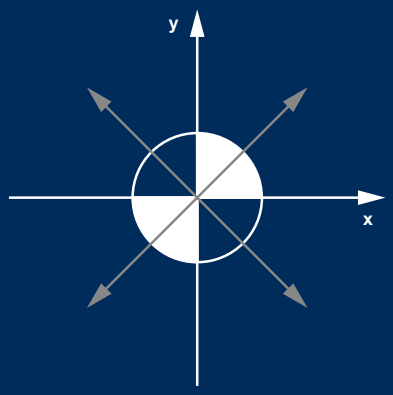

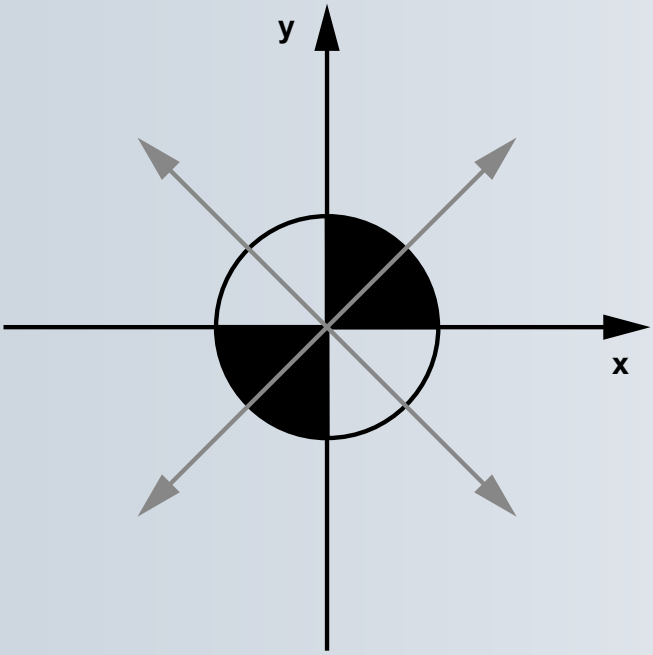

PLUS5

- The symbol on the side represents the vectorial force transmission system that acts by binding the pins uniformly and in all directions.

Watch the video

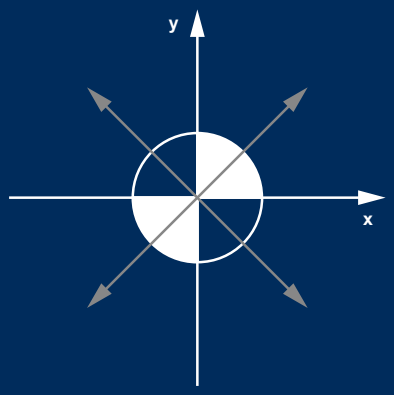

PLUS5

MECHANICAL ZERO POINT SYSTEM

PLUS5 BENEFITS

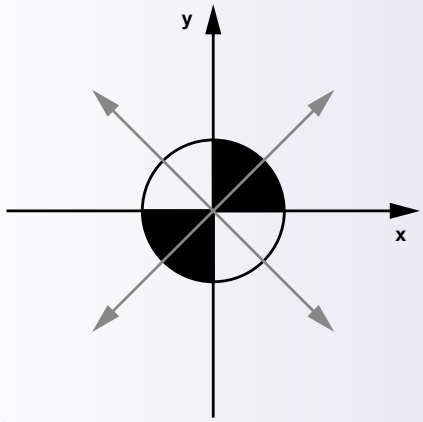

- Locking and unlocking system of the pins with a rotation of only 180 degrees
- Does not require a torque wrench. The limit switch determines locking / unlocking
- Repeatability < 0.005mm
- Pull down force 7 kN for Plus 5 52 and 8 kN for Plus 5 96
- Holding force 40 kN for Plus 5 52 and 80 kN for Plus 5 96

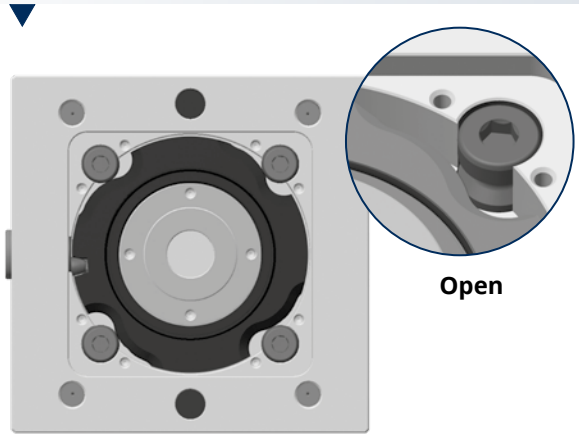

Open

The mechanism designed for locking the pins consists of a cam which is operated by an eccentric pin.
The system guarantees high performance in terms of precision and clamping force.
This is due in particular to the fact that the cam locks the 4 pins outwards at the same time.

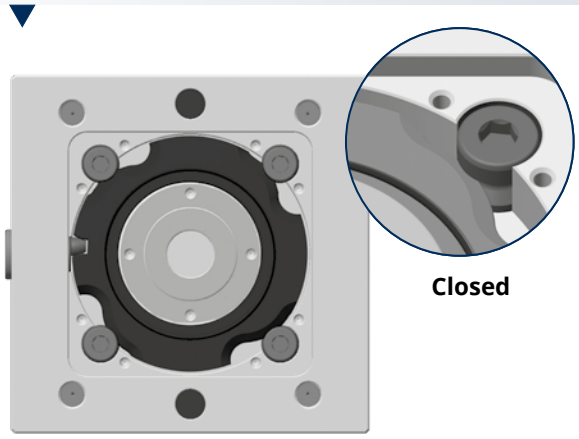

Closed

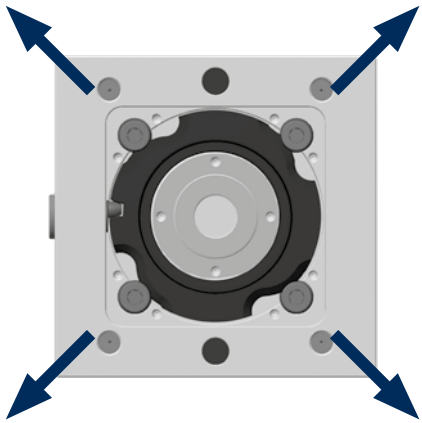

PLUS 5 - 52

PLUS 5 - Mechanical Zero Point system

- Complete with wrench 10mm
- Pins not included

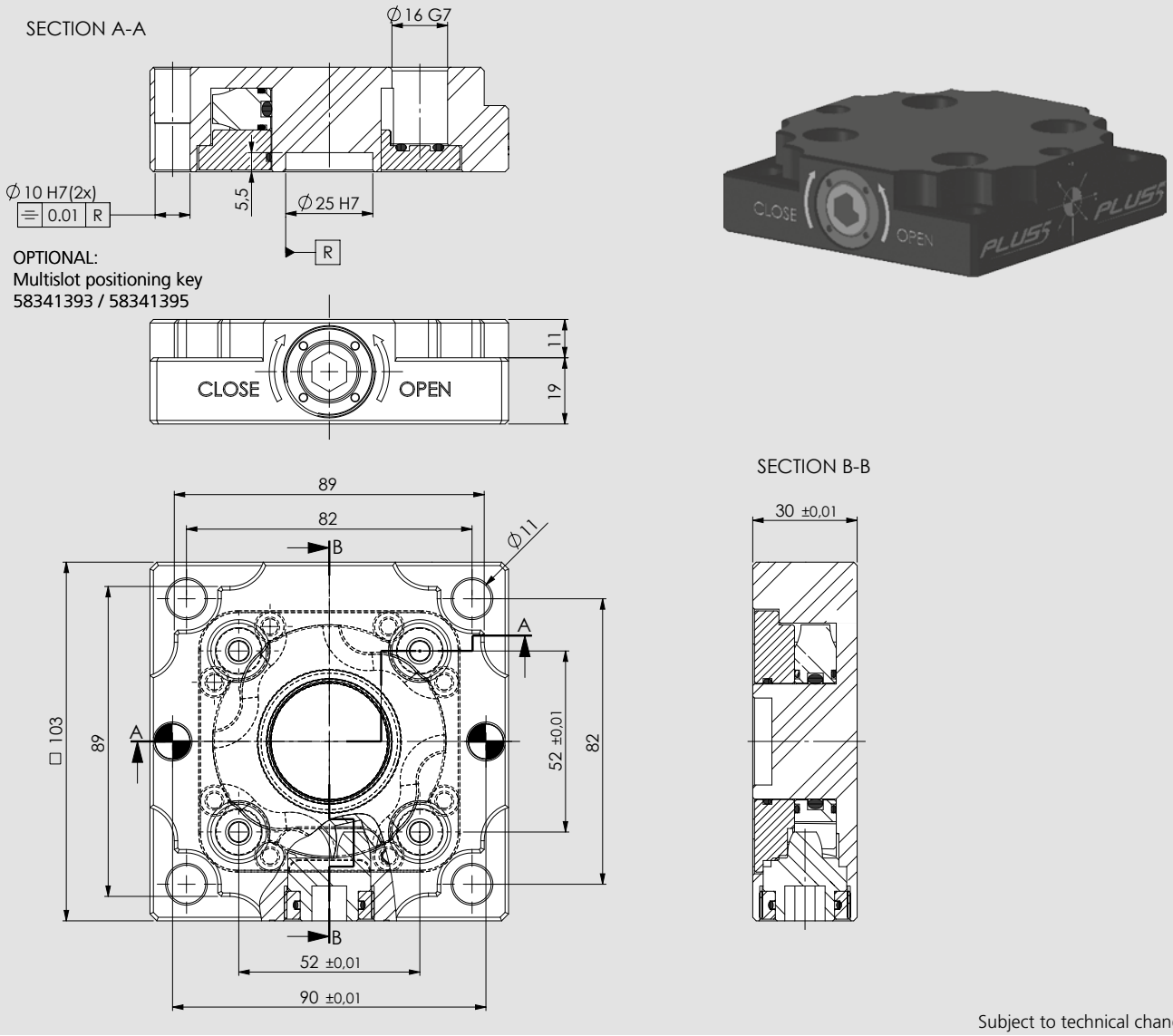

Subject to technical changes.

Id. No.	Weight (Kg)
46240101	2

PLUS 5 - 96

- Complete with wrench 10mm
- Pins not included

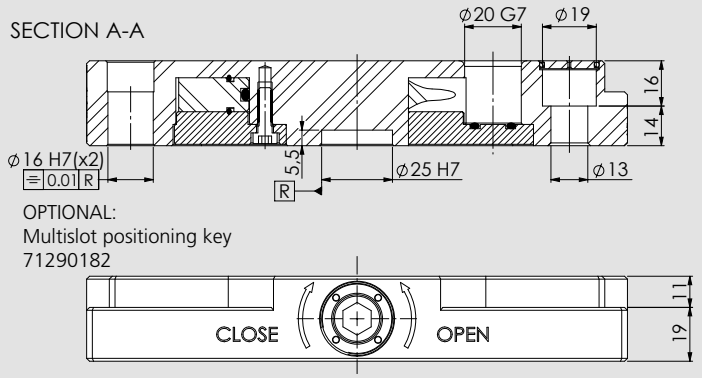

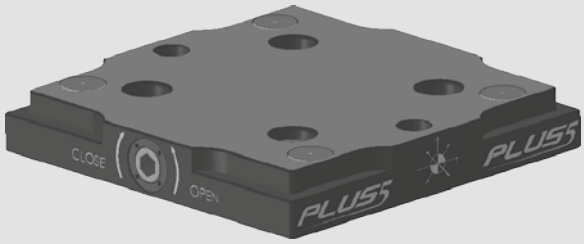

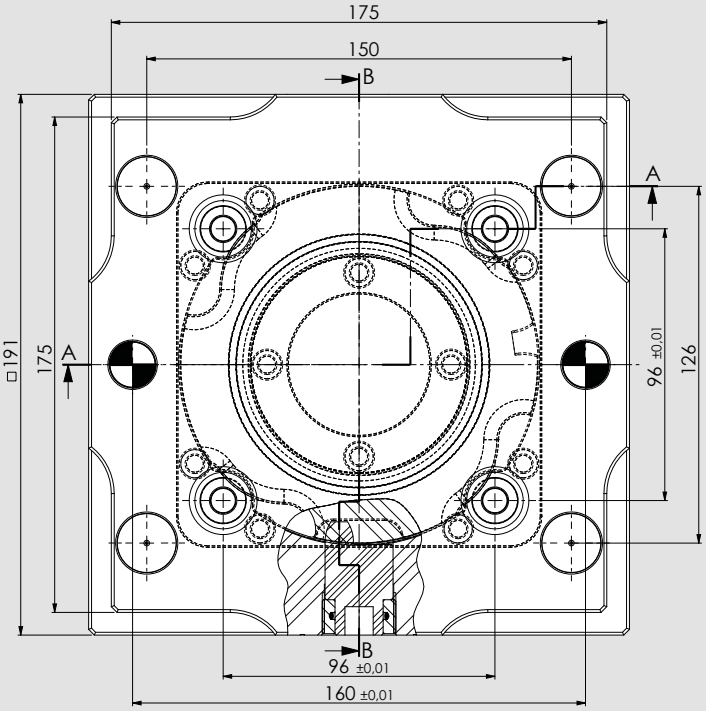

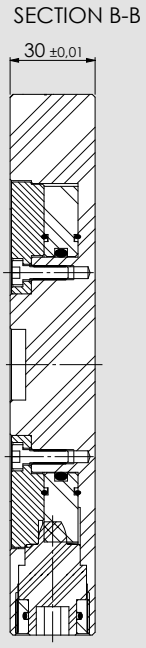

Subject to technical changes.

Id. No.	Weight (Kg)
46240102	7,5

PLUS 5 All in One 52/96

PLUS 5 All in One - Mechanical Zero Point system

- Complete with:
  - wrench 10mm
  - protection caps (Plus 5 52 / 96)
- Pins not included

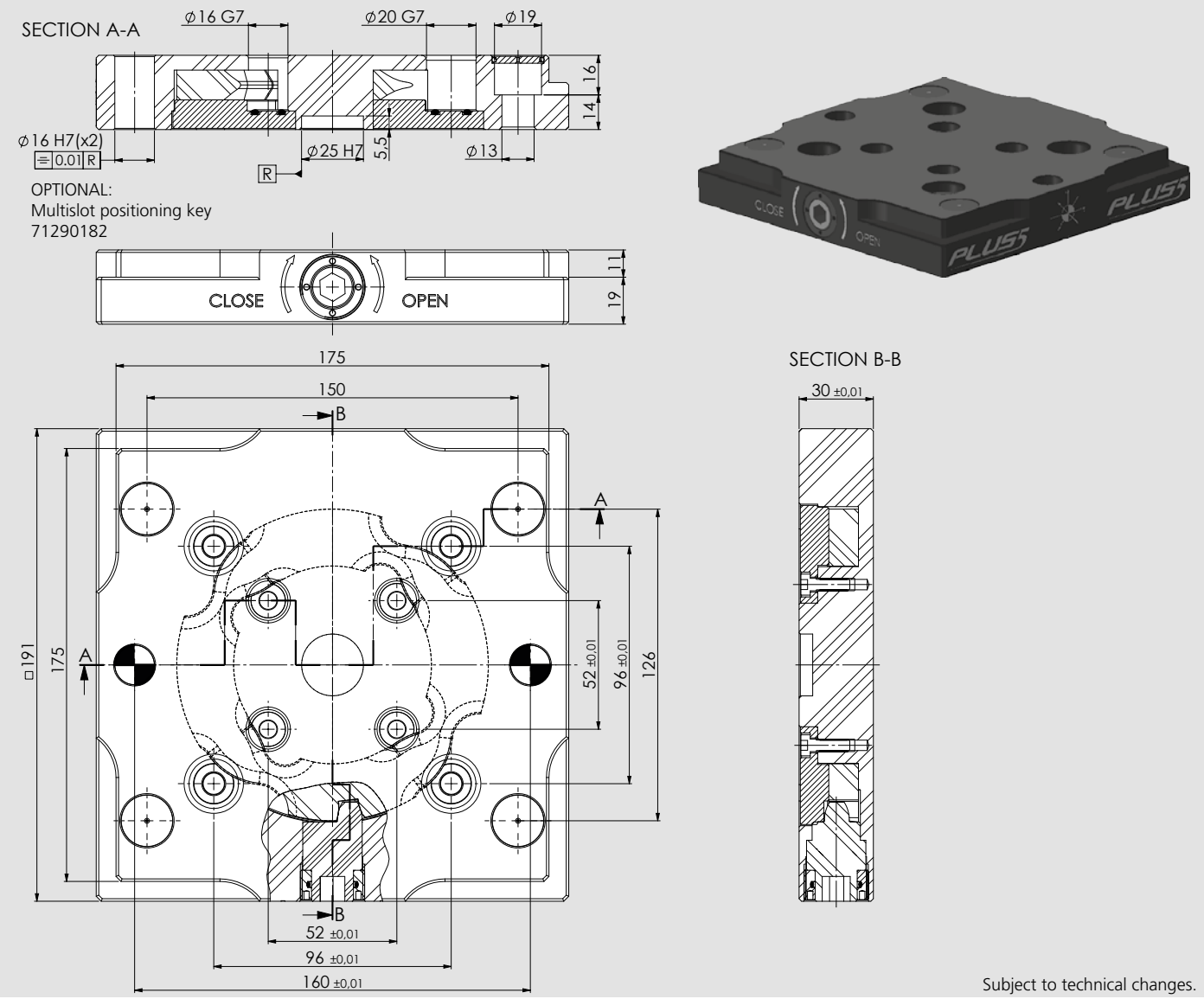

Subject to technical changes.

Id. No.	Weight (Kg)
46240103	7,5

PLUS 5 INDEX 52

- Complete with wrench 10mm
- Pins not included

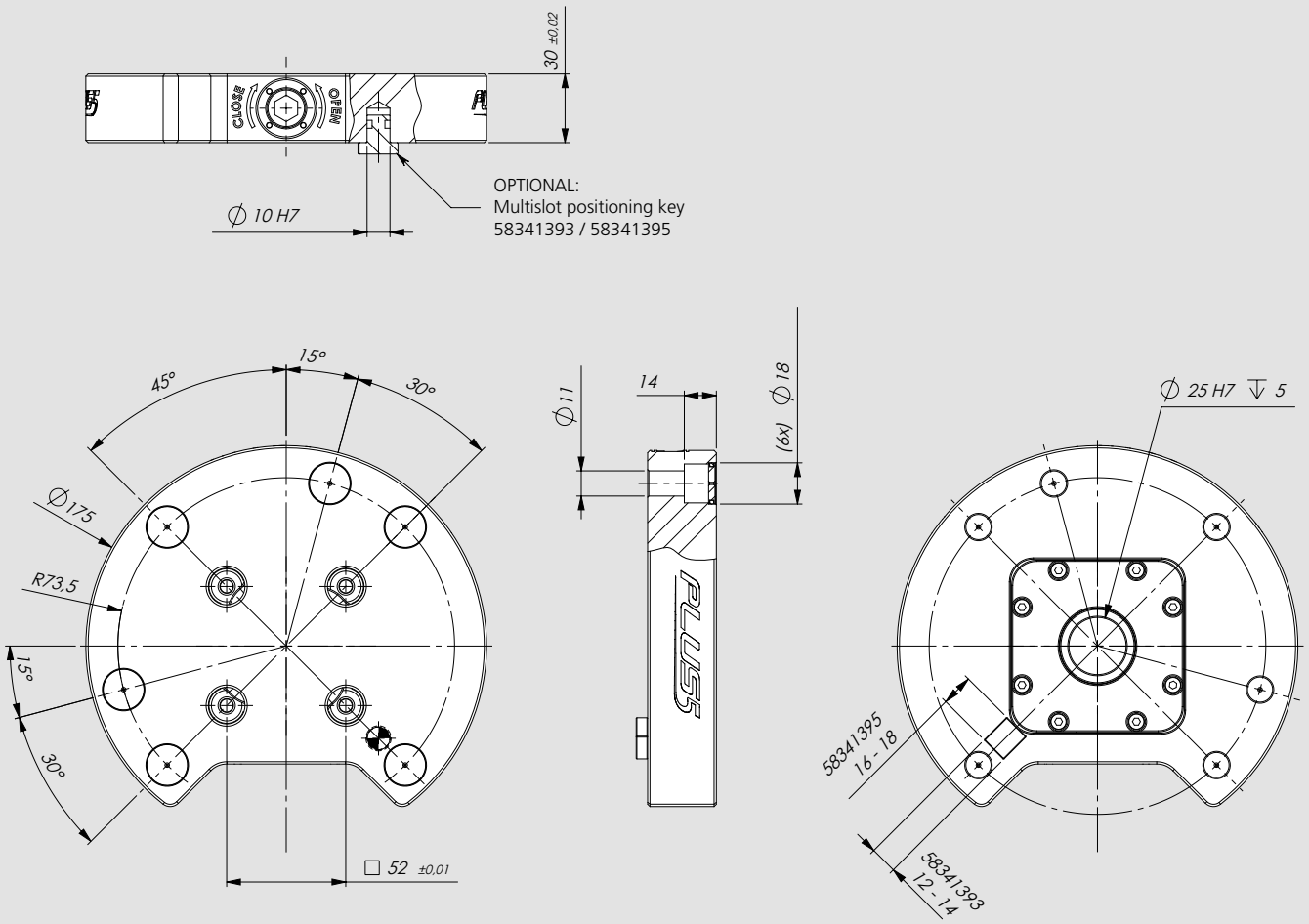

Subject to technical changes.

Id. No.	Weight (Kg)
46240111	6

PLUS 5 INDEX 96

PLUS 5 INDEX - Mechanical Zero Point system

- Complete with wrench 10mm
- Pins not included

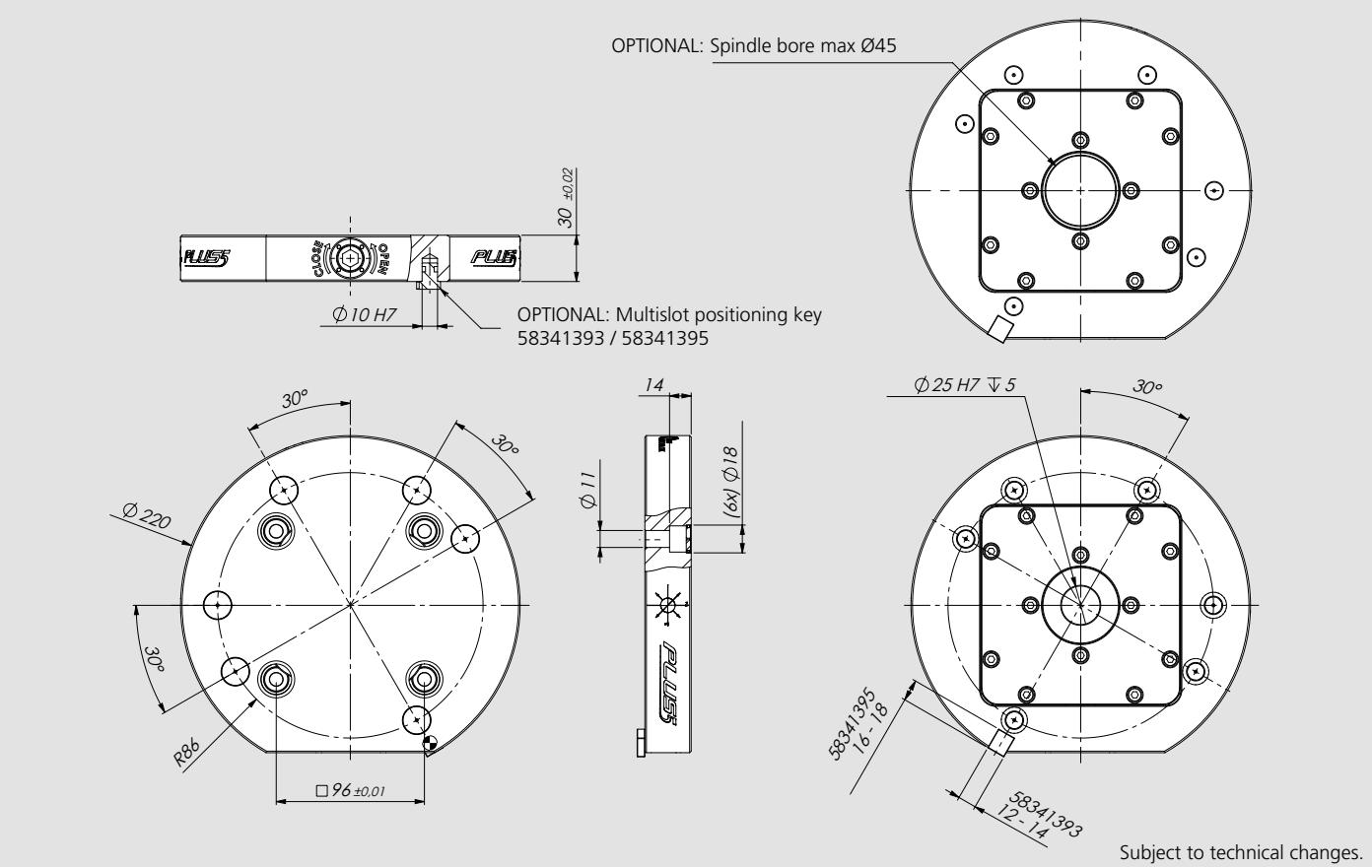

Subject to technical changes.

Id. No.	Weight (Kg)
46240112	8

Working example

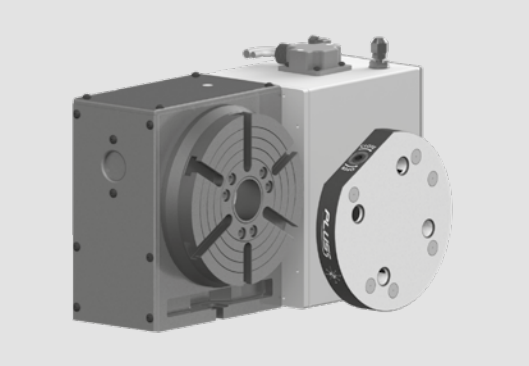

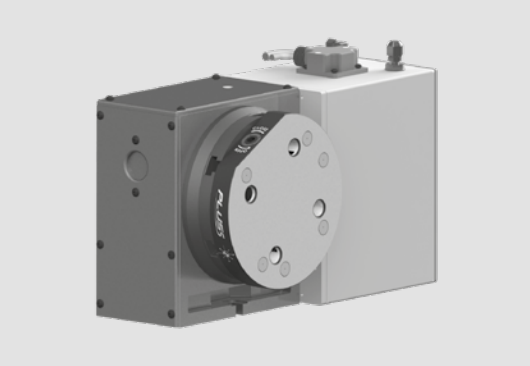

PLUS 5 INDEX All in One 52/96

- Complete with:
  - wrench 10mm
  - protection caps (Plus 5 - 96)
- Pins not included

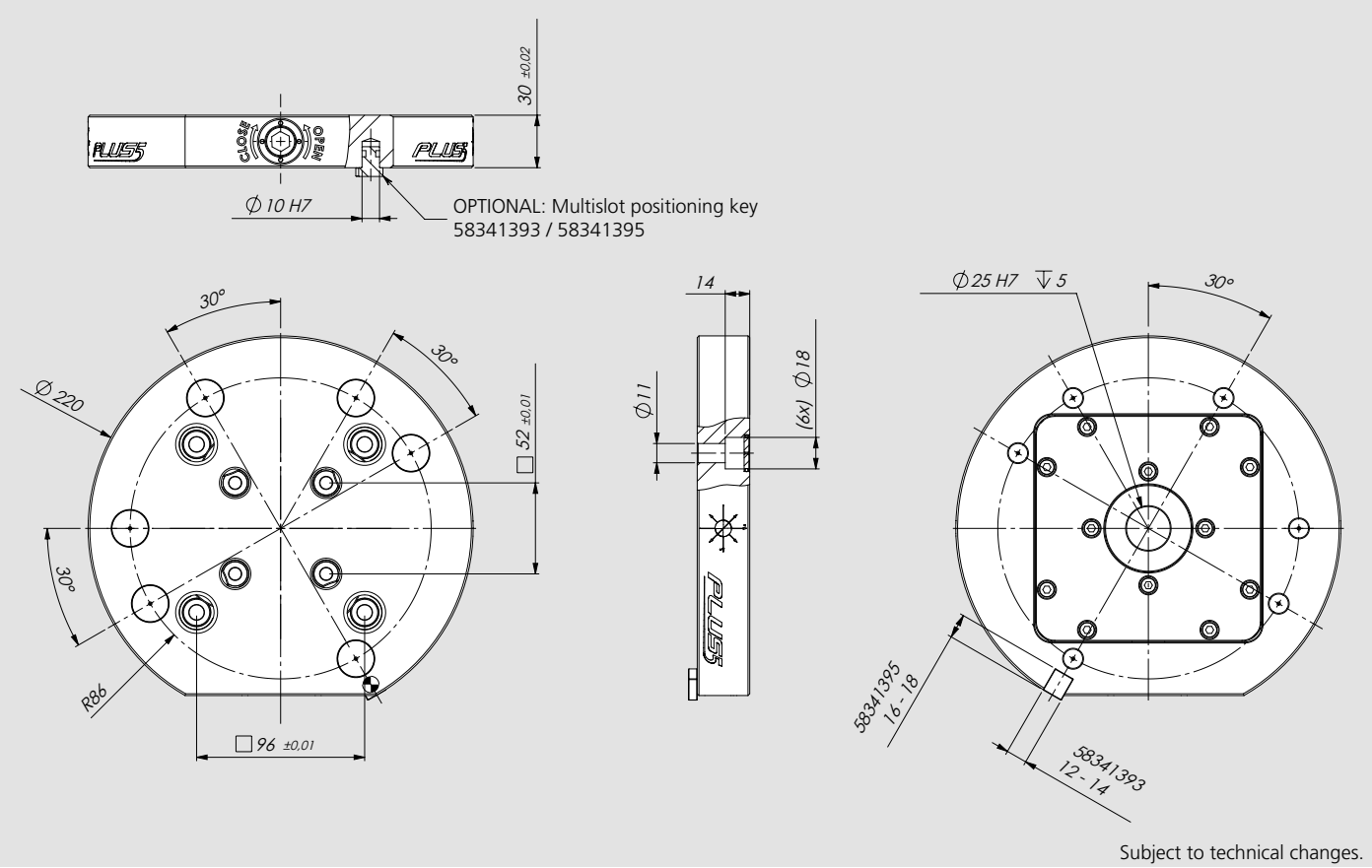

Subject to technical changes.

Id. No.	Weight (Kg)
46240113	8

PLUS 5 - 52

MULTIPLE CLAMPING PLATE

- Complete with:
  - wrench 10mm
  - n. 2 safety plates (Id. No. 46248205)
- Pins not included

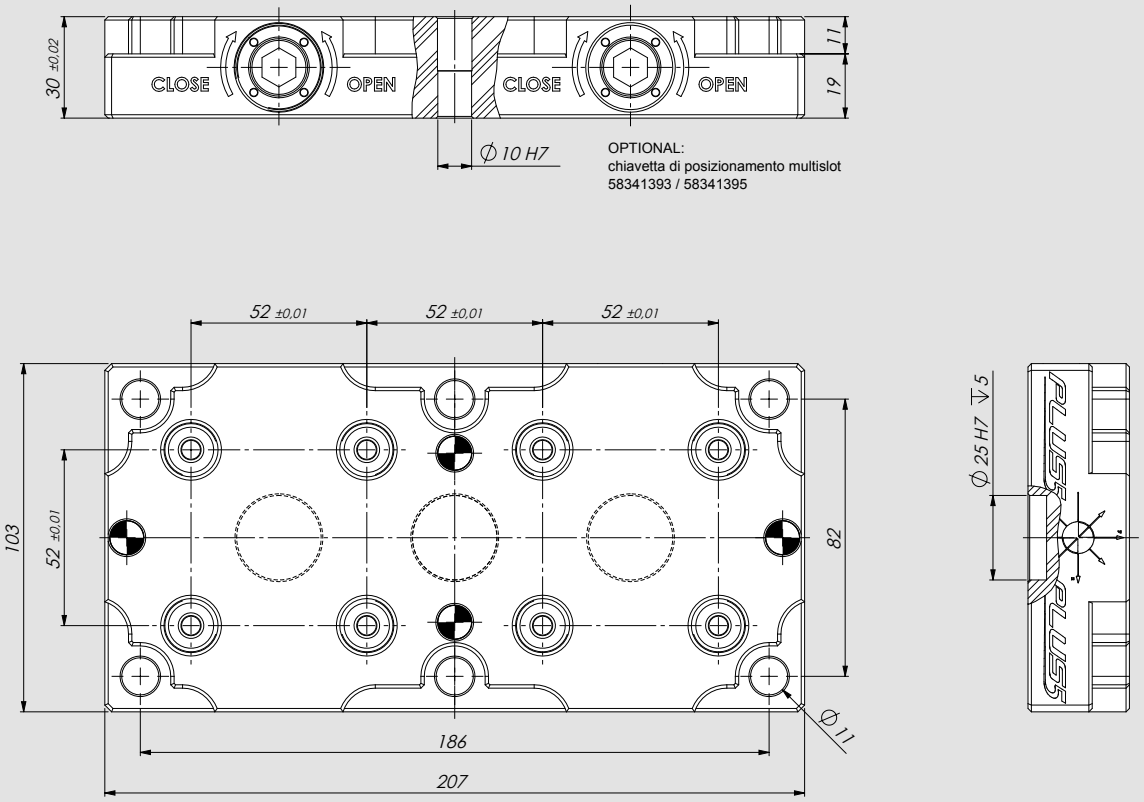

Subject to technical changes.

Id. No.	Weight (Kg)
46248200	4

PLUS 5 - 96

- Complete with:
  - wrench 10mm
  - n. 2 safety plates (Id. No. 46248215)
- Pins not included

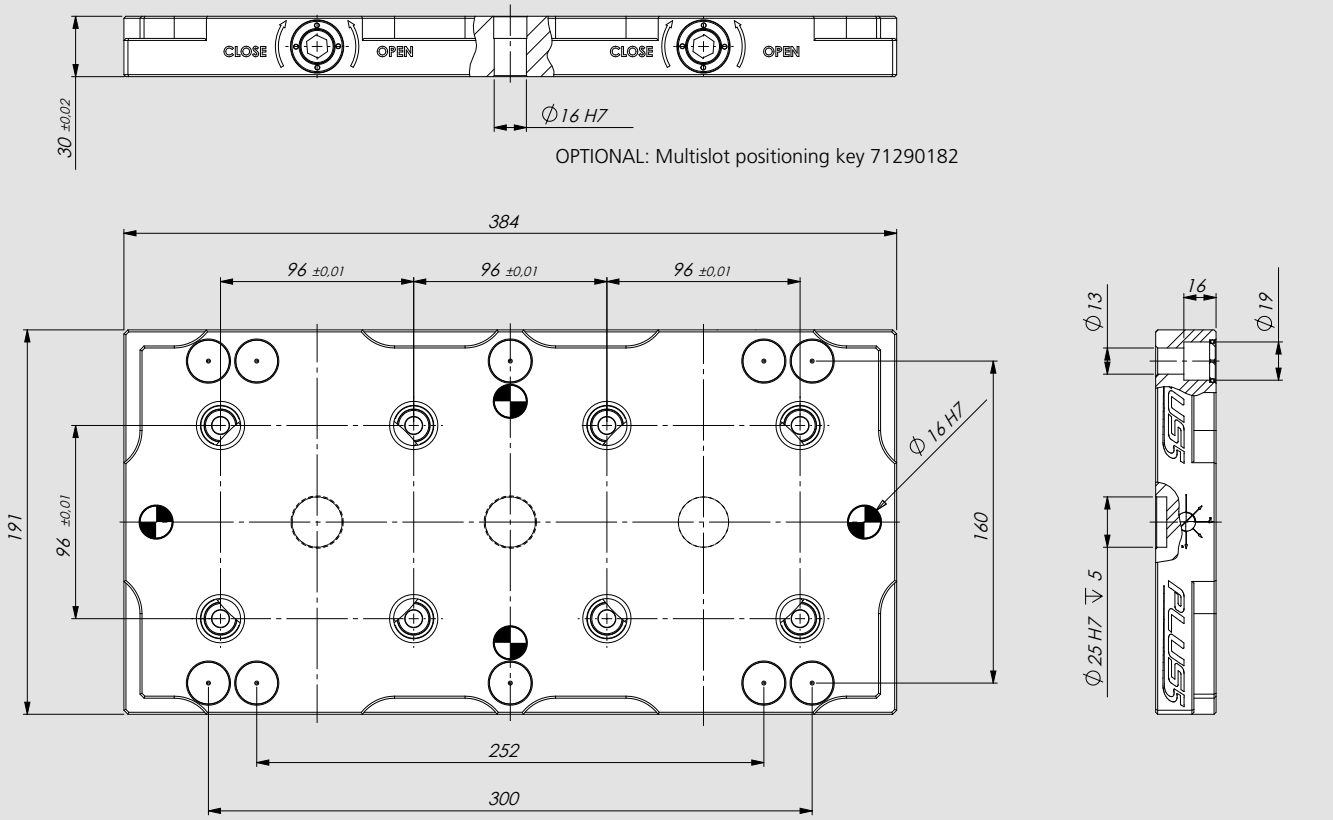

Subject to technical changes.

Id. No.	Weight (Kg)
46248210	16

Working example

PLUS 5 - 96

MULTIPLE CLAMPING ROUND PLATE

- Complete with:
  - wrench 10mm
  - n. 2 safety plates (Id. No. 46248215)
- Pins not included

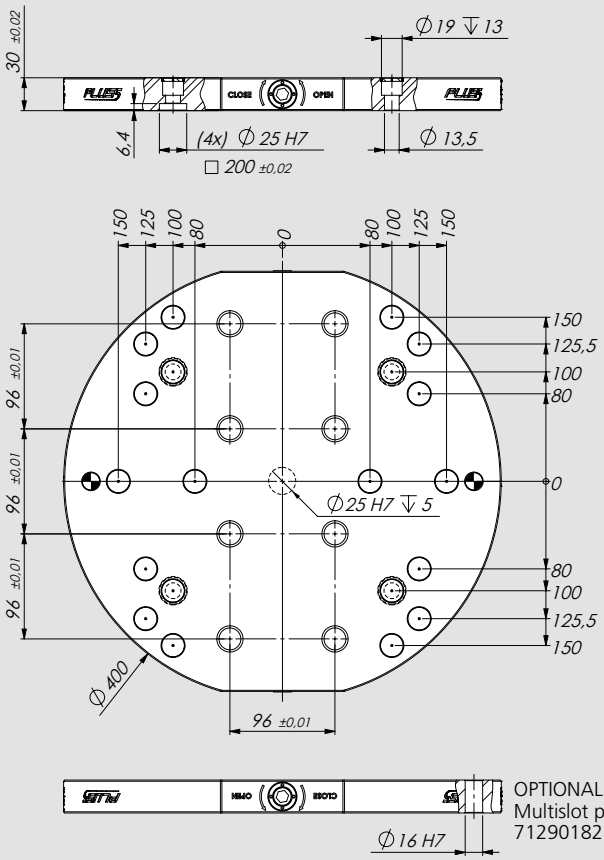

OPTIONAL:
Multislot positioning key
71290182

Subject to technical changes.

Id. No.	Weight (Kg)
46248220	27

Working example

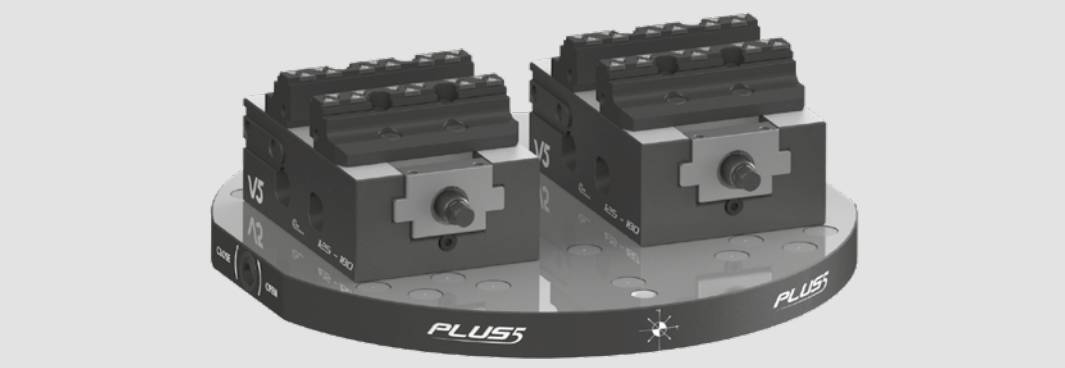

PLUS 5 - 96

- Complete with:
  - wrench 10mm
  - n. 2 safety plates (Id. No. 46248215)
- Pins not included
- n. 4 fittings male

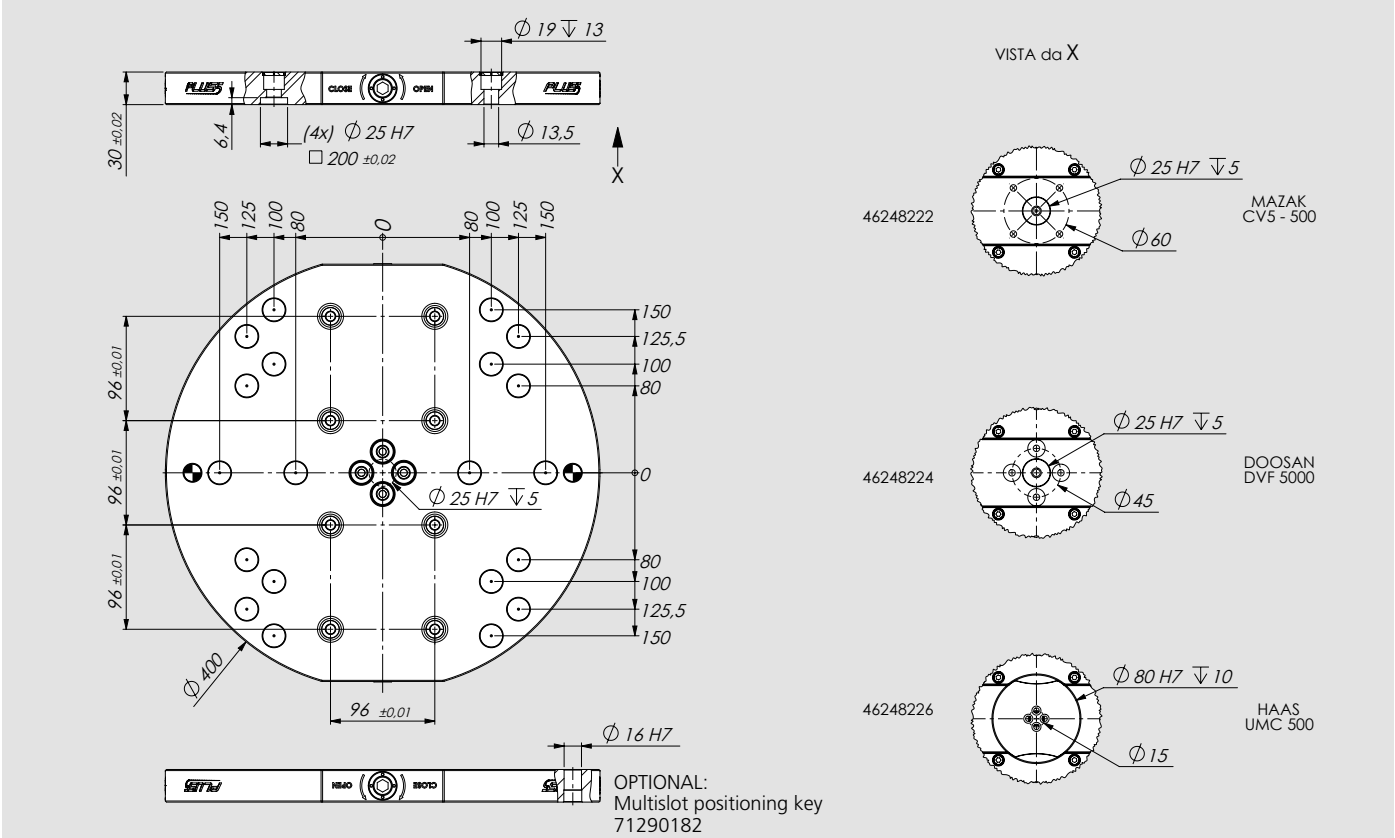

Subject to technical changes.

Description	Id. No.	Description	Id. No.	Description	Id. No.	Weight (Kg)
Mazak CV5-500	46248222	Doosan DVF 5000	46248224	Haas UMC 500	46248226	27

Working example

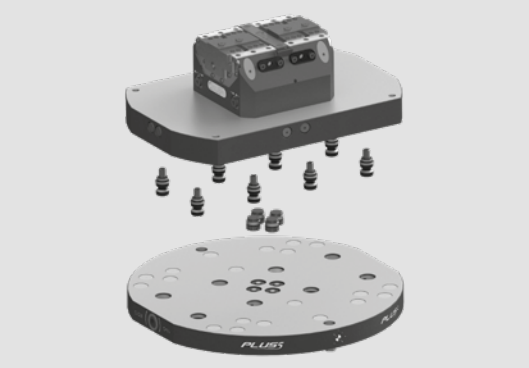

PLUS 5 - 96

MULTIPLE CLAMPING PLATE FOR JIS PALLET 400x400

- Complete with:
  - wrench 10mm
  - n. 6 safety plates (Id. No. 46248215)
- Pins not included

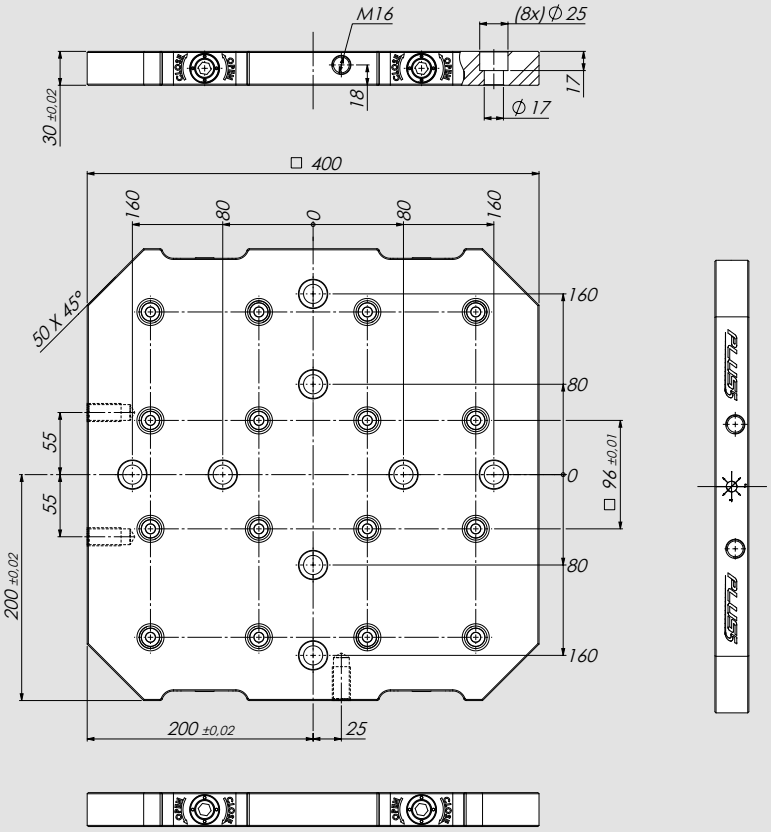

Id. No.	Weight (Kg)
46248230	33

Working example

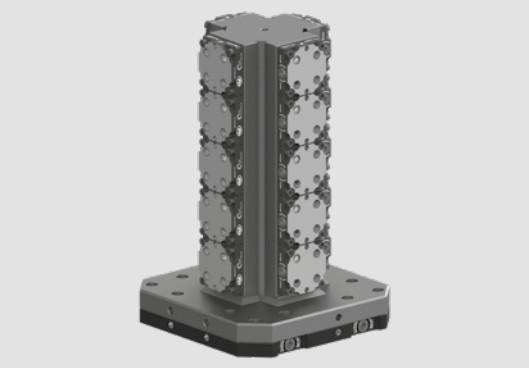

MULTIPLE CLAMPING PLATE FOR JIS PALLET 500x500

PLUS 5 - 96

- Complete with:
  - wrench 10mm
  - n. 6 safety plates (Id. No. 46248215)
- Pins not included

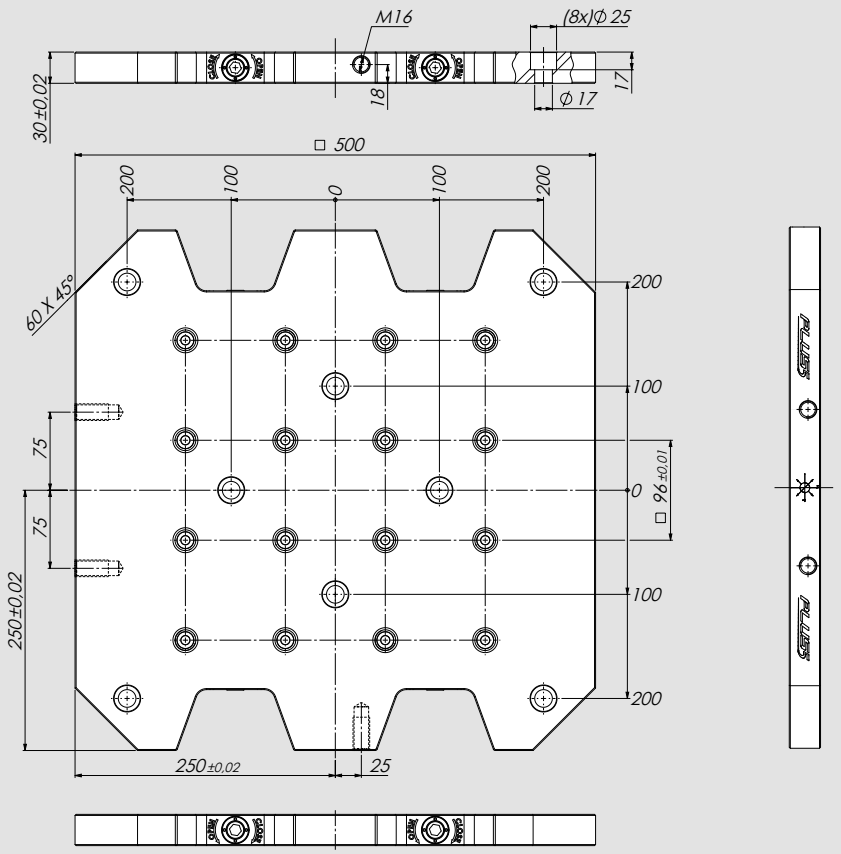

Id. No.	Weight (Kg)
46248232	50

Working example

PLUS 5 - 52/96

INTERFACE 52/96

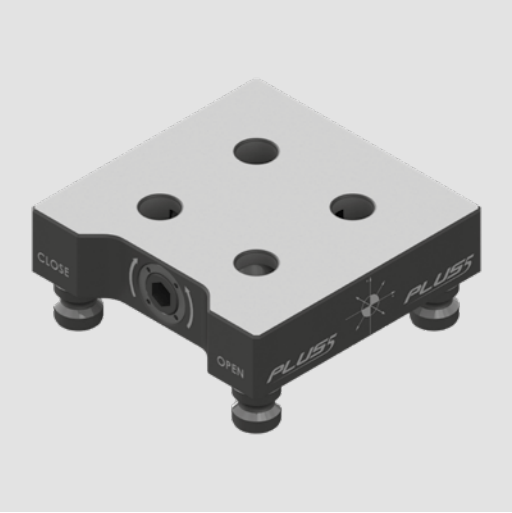

- Complete with:
  - wrench 10mm
- n. 4 pins 96 (46240220)

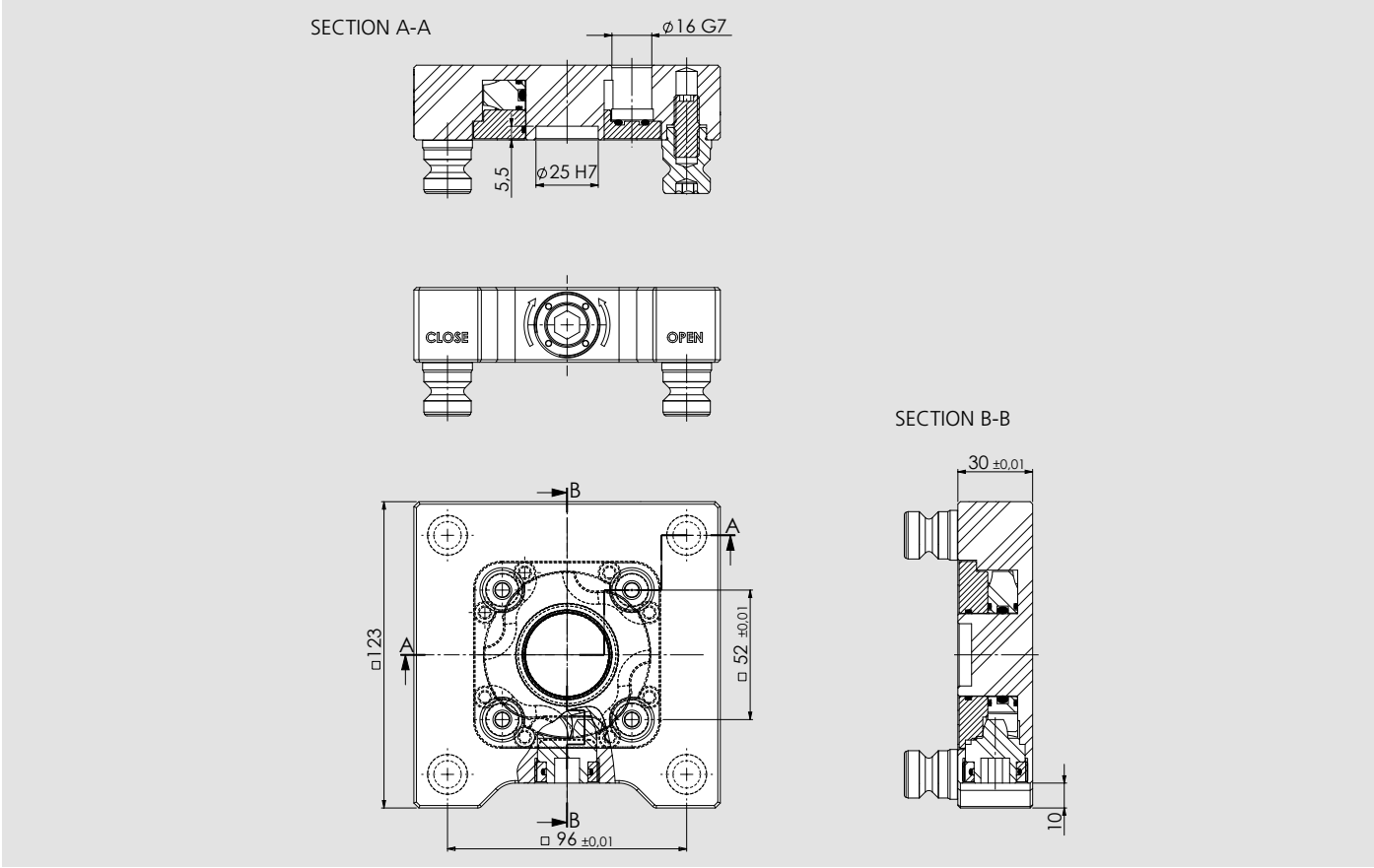

Id. No.	Weight (Kg)
46240104	3,5

Working example

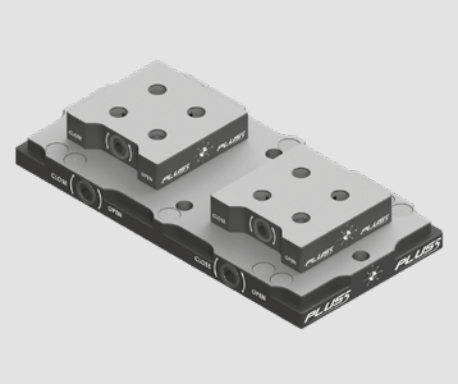

Reduction plate

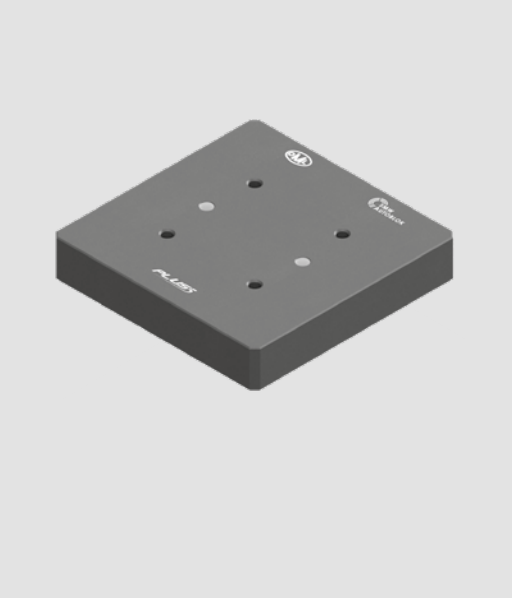

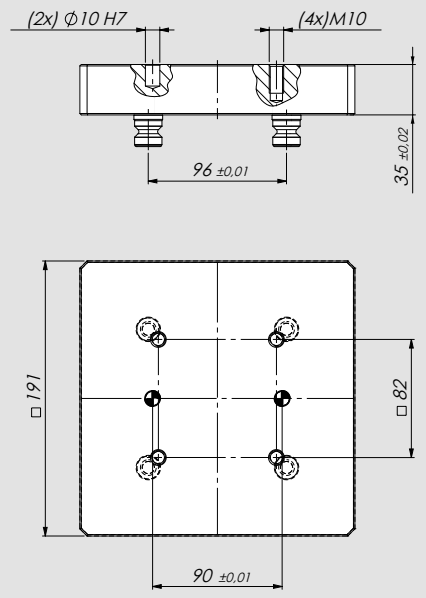

Working examples

Complete with
- Fixing screws and dowel pins for Plus 5 52
- Set of 4 Plus 5 96 pins

Id. No.	Weight (Kg)
46242210	10

Multiple reduction plate

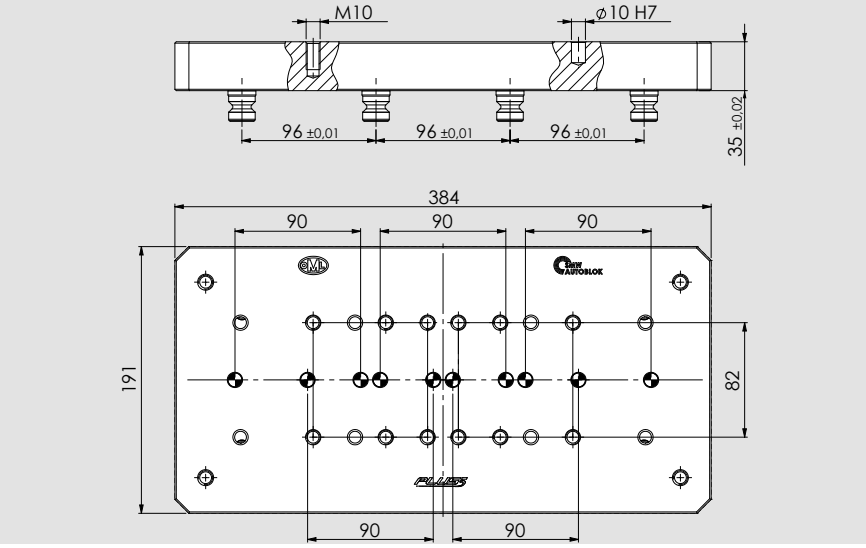

Complete with
- Fixing screws and dowel pins for Plus 5 52
- n. 2 Set of 4 Plus 5 96 pins

Id. No.	Weight (Kg)
46242220	21

Working example

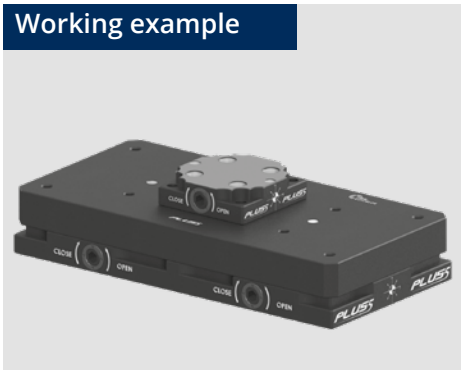

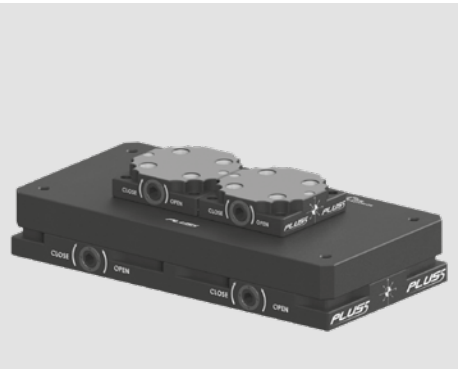

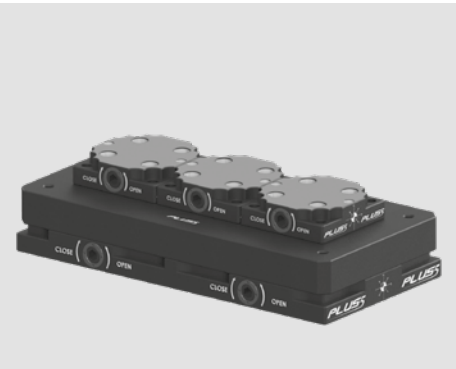

Clamping pins

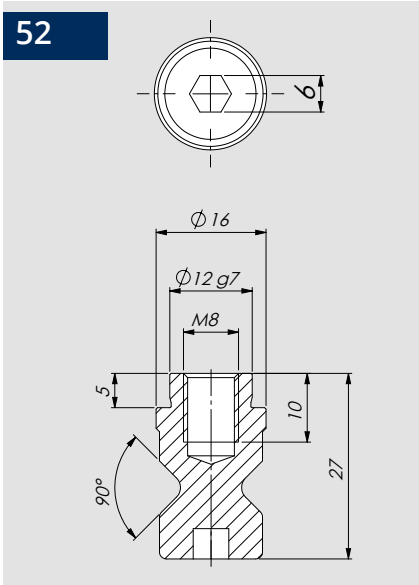

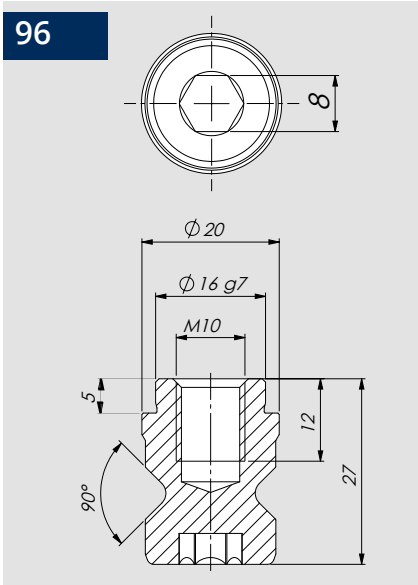

- Complete of grub screw M8 for Plus5 52 and M10 for Plus5 96

Description	Id. No.	Weight (Kg)
Set of 4 pins for PL5 - 52	46240214	0,12
Set of 4 pins for PL5 - 96	46240224	0,20
Pin for PL5 - 52	46240210	0,03
Pin for PL5 - 96	46240220	0,05

The dimensions of the pin identify compatibility with other pins on the market

Raised clamping pins

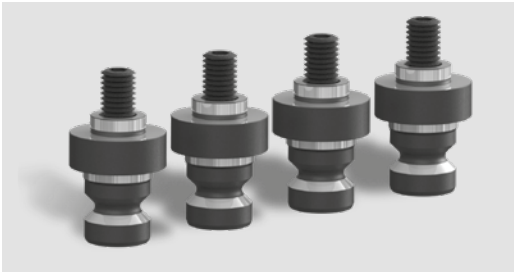

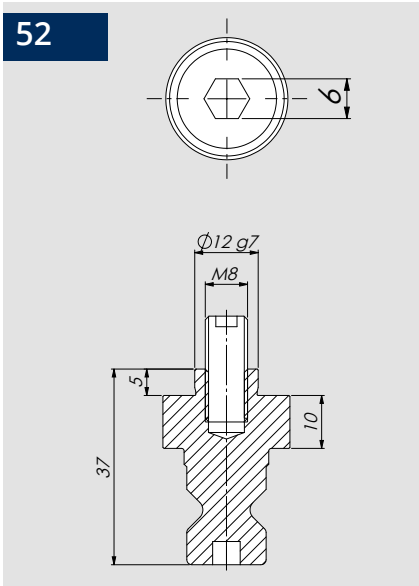

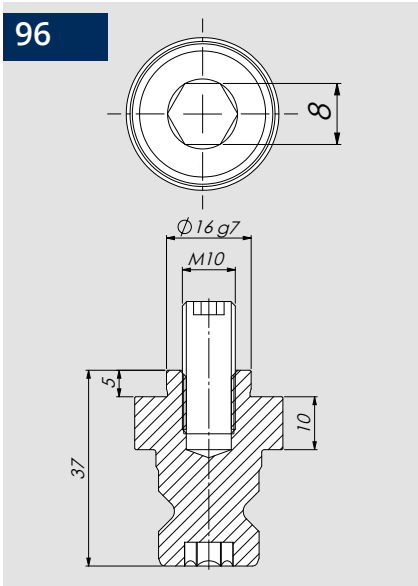

- Complete of grub screw M8 for Plus5 52 and M10 for Plus5 96

Description	Id. No.	Weight (Kg)
Set of 4 raised pins for PL5 - 52	46240234	0,12
Set of 4 raised pins for PL5 - 96	46240244	0,20
Raised pin for PL5 - 52	46240230	0,03
Raised pin for PL5 - 96	46240240	0,05

The dimensions of the pin identify compatibility with other pins on the market

PLUS 5 - 52/96

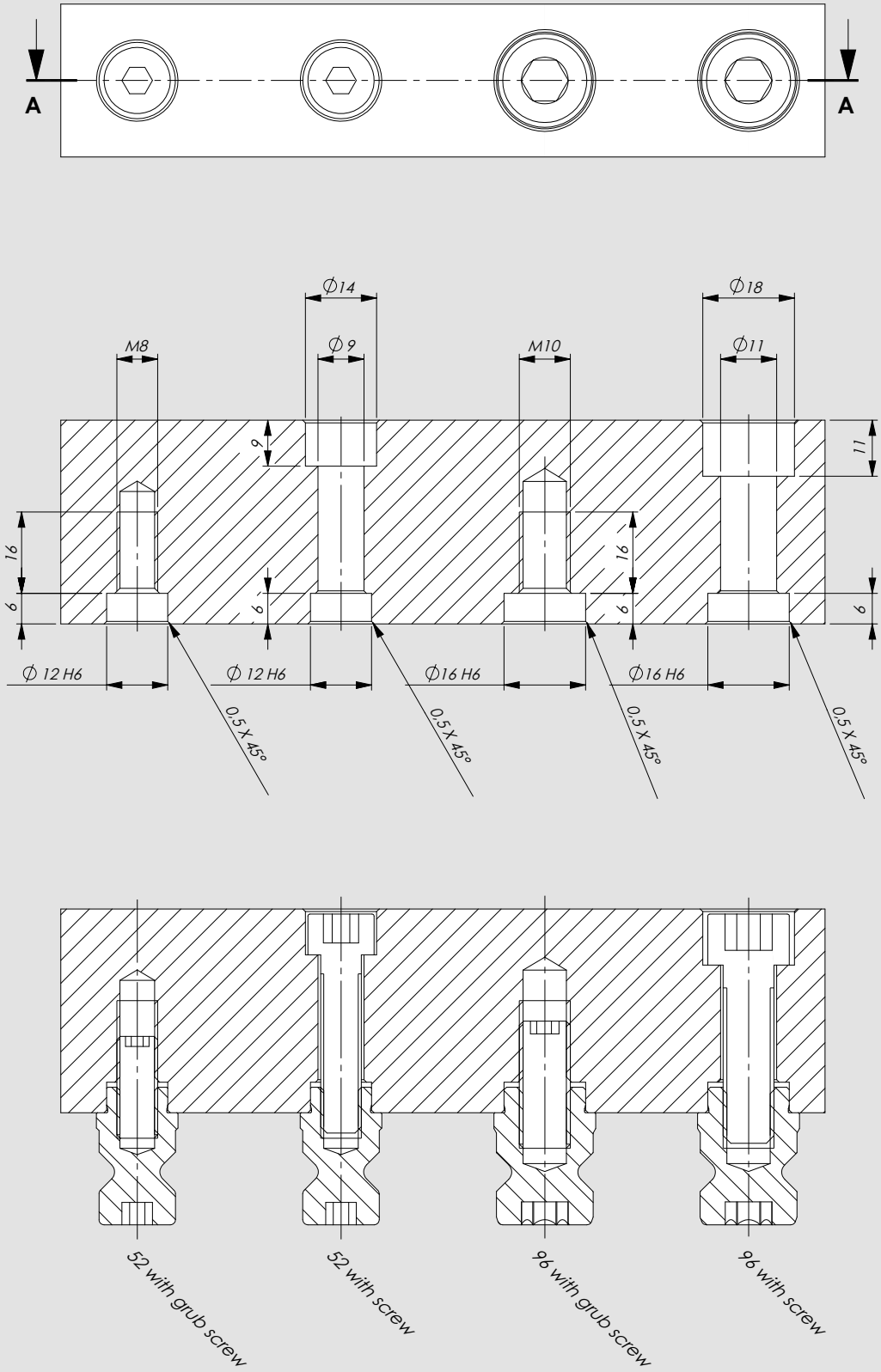
A
A
Ø14
Ø18
M8
Ø 9
M10
Ø11
6
11
16
6
16
6
6
6
Ø 12 H6
Ø 12 H6
Ø16 H6
Ø16 H6
0,5 X 45°
0,5 X 45°
0,5 X 45°
0,5 X 45°
52 with grub screw
52 with screw
96 with grub screw
96 with screw

PLUS 5 - 52/96

PALLET INTERFACE PLATE

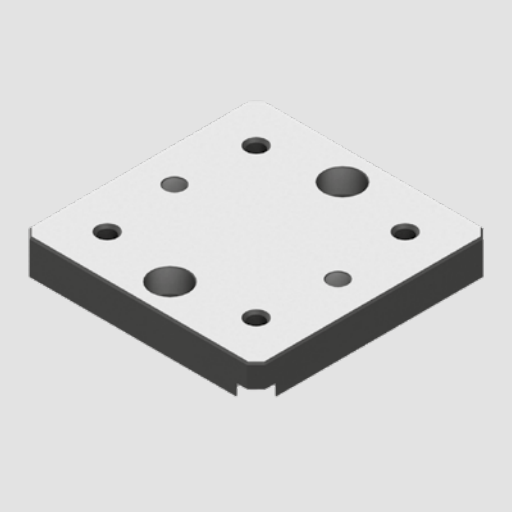

Working example

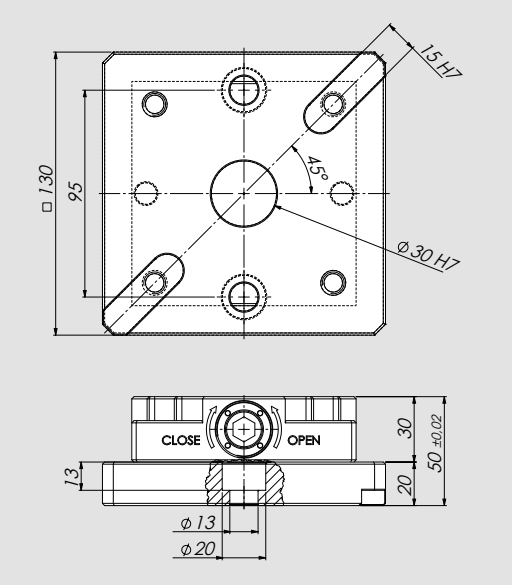

PLUS 5 - 52
Pallet interface plate

Complete with screws and dowel pins
Plus 5 not included

Id. No.	Weight (Kg)
46242110	2,5

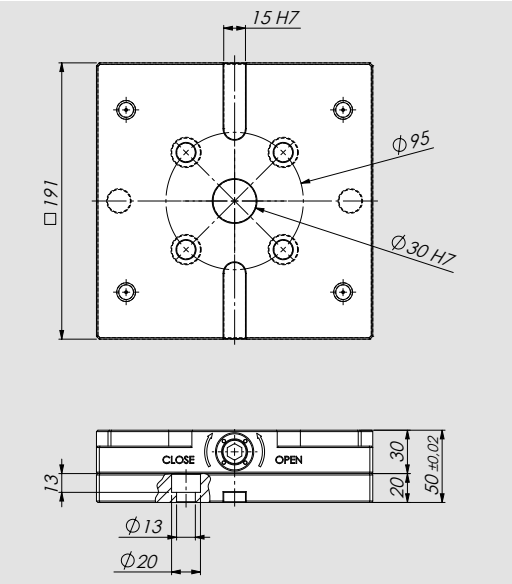

PLUS 5 - 96
Pallet interface plate

Complete with screws and dowel pins
Plus 5 not included

Id. No.	Weight (Kg)
46242120	5,5

PLUS 5 - 52/96

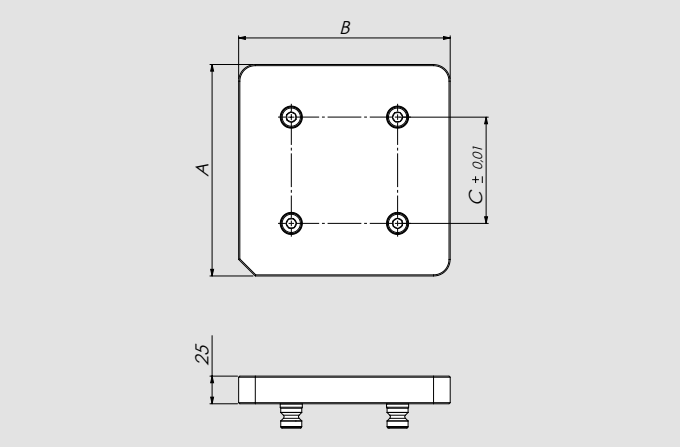

PLUS 5 - 52 / 96
Smooth plate

Complete with set of 4 pins

Id. No.	Type	A	B	C	Weight
46247710	52	103	103	52	2 Kg
46247720	96	191	191	96	7 Kg

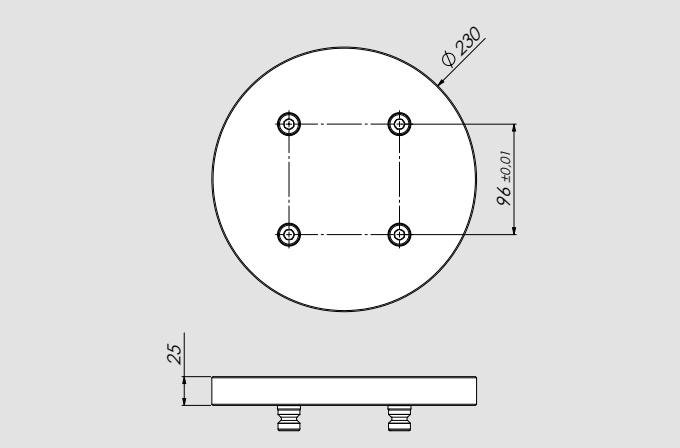

PLUS 5 - 96
Smooth round plate

Complete with set of 4 pins

Id. No.	Weight (Kg)
46247730	8

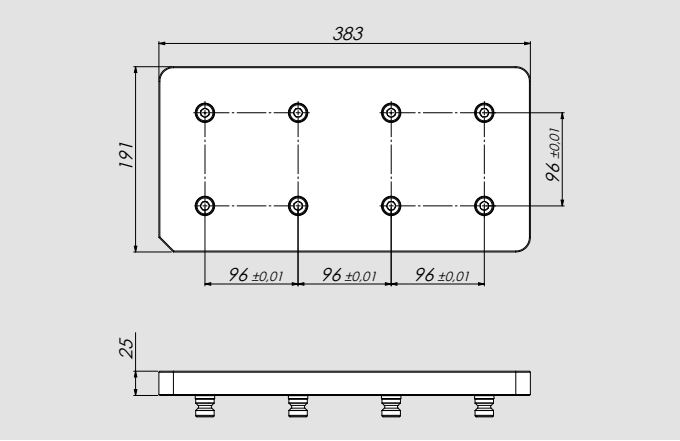

PLUS 5 - 96
Double smooth plate

Complete with n. 2 set of 4 pins Plus 5 96

Id. No.	Weight (Kg)
46247740	15

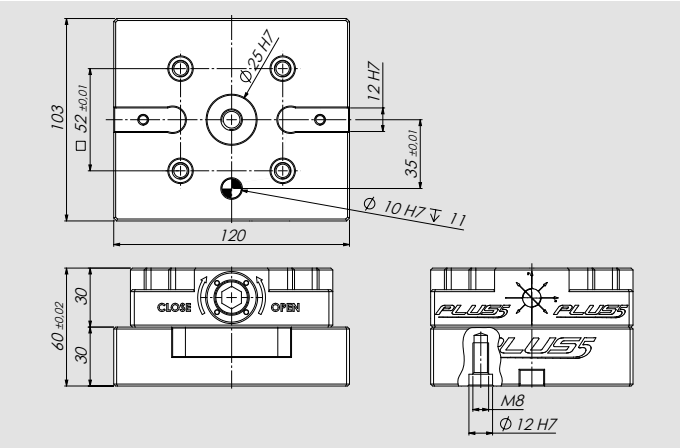

RISER PLUS 5 - 52 (H tot = 60)

Complete with screws and dowel pins
Plus 5 not included

Id. No.	Weight (Kg)
46242018	2

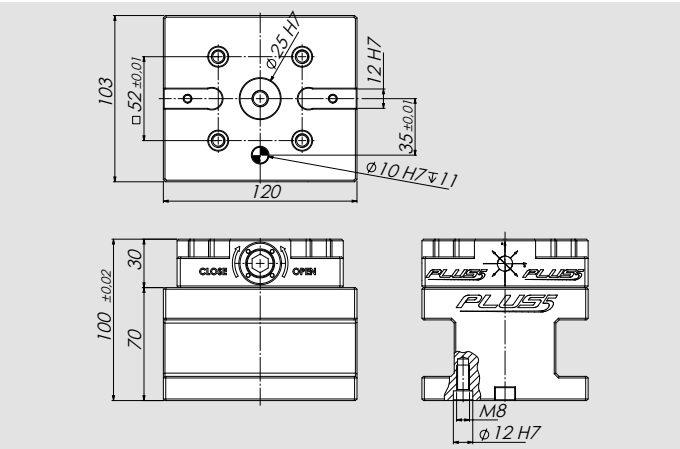

RISER PLUS 5 - 52 (H tot = 100)

Complete with screws and dowel pins
Plus 5 not included

Id. No.	Weight (Kg)
46242019	5

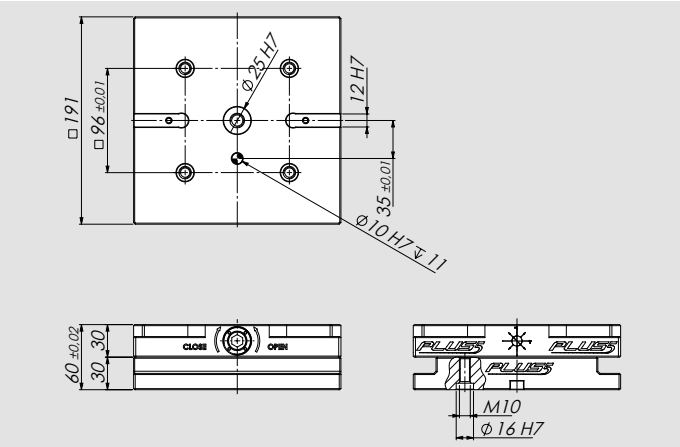

RISER PLUS 5 - 96 (H tot = 60)

Complete with screws and dowel pins
Plus 5 not included

Id. No.	Weight (Kg)
46242028	7

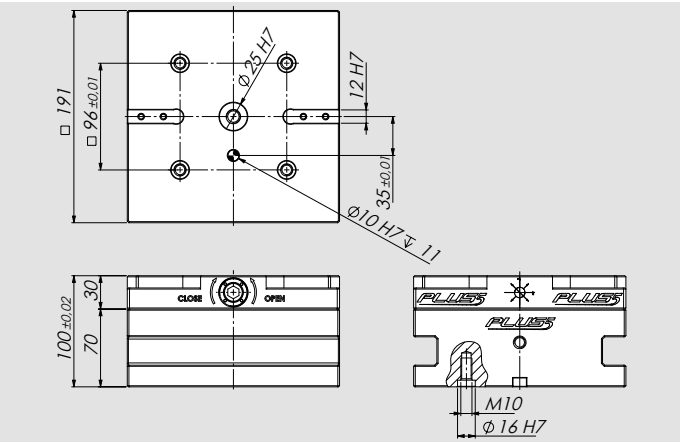

RISER PLUS 5 - 52-96 (H tot = 100)

Complete with screws and dowel pins
Plus 5 not included

Id. No.	Weight (Kg)
46242029	18

PLUS 5 - 52/96

Applications / Customer Benefits

- Ideal for 5 axis machines
- Compact design
- Possibility to be mounted directly on machine tools with radial slots at 45 / 60 degrees
- Possibility to be mounted directly on APS Zero Point system and Plus5

Technical features

- Material: ALU

Standard equipment

Positioning keys and screws for IMG, V5 and E5 vises
Pins and screws

IMG 88 - 130
V5 88 - 130
E5 88 - 130
PLUS 5 - 52

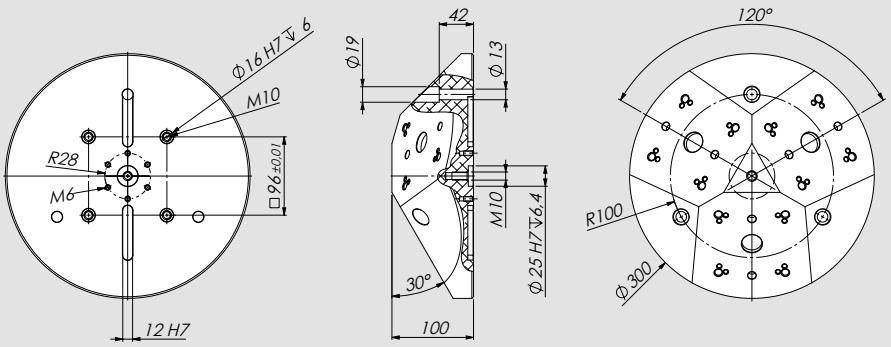

IMG 125 - 180
IMG 125 - 220
V5 125 - 180
E5 125 - 180
PLUS 5 - 96

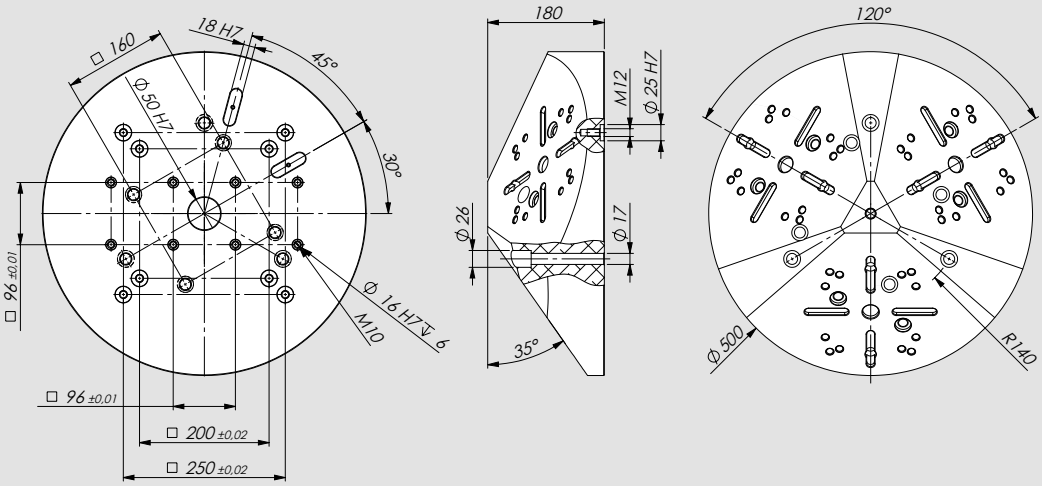

Type	Id. No.	Weight (Kg)
For IMG, V5, E5 88-130 and PLUS 5 - 52	58343210	12
For IMG 125-180, IMG 125-220, V5, E5 125-180 and PLUS 5 - 96	58353210	55

Working example

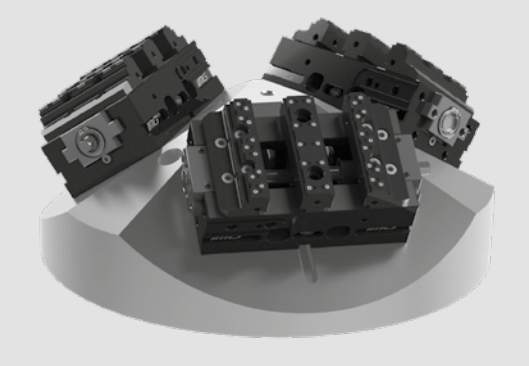

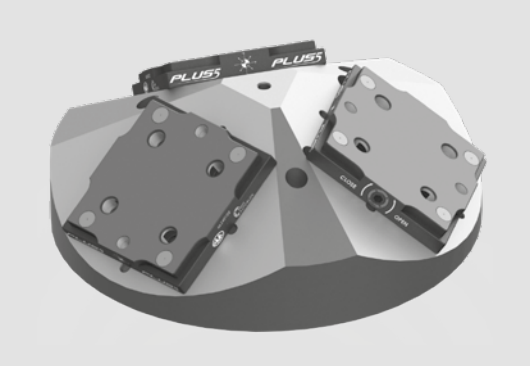

PLUS 5 - 52

TRUNNION FOR PLUS 5 - 52

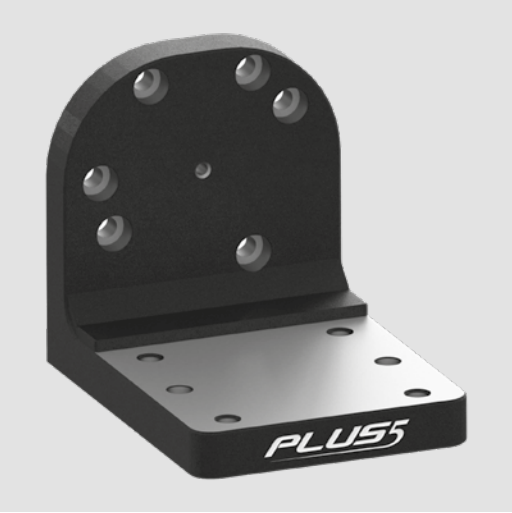

Plus 5 - 52 not included

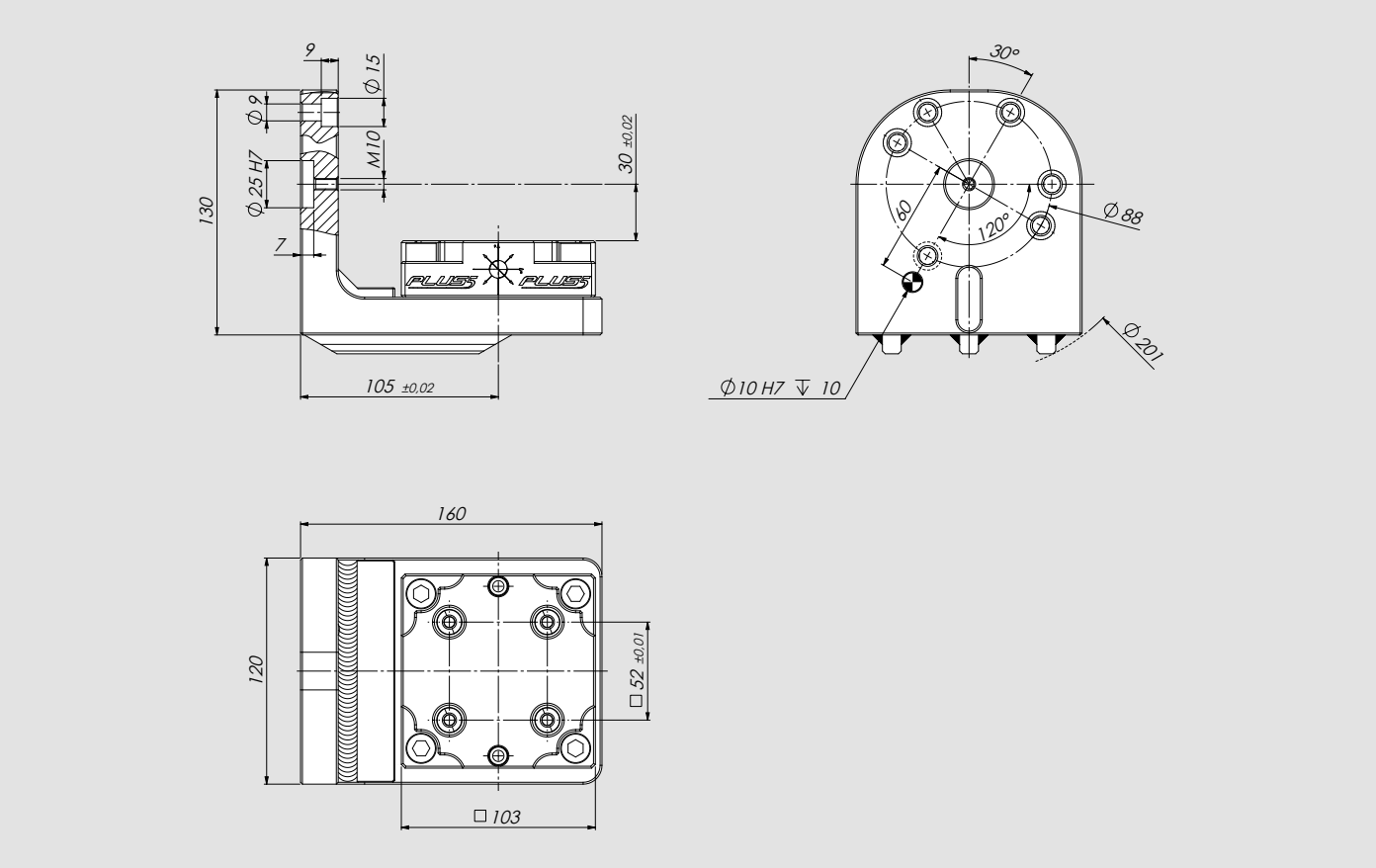

Id. No.	Weight (Kg)
46242038	6

Working example

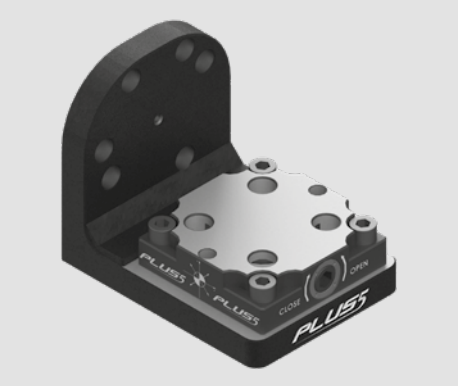

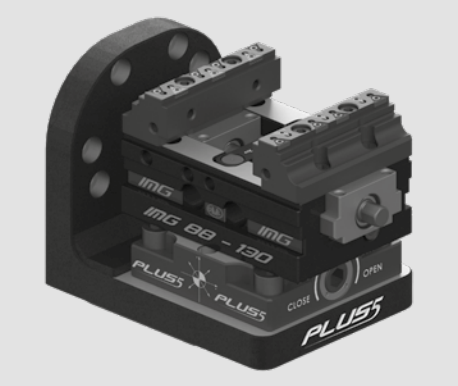

PLUS 5 - 96

Plus 5 - 52 not included

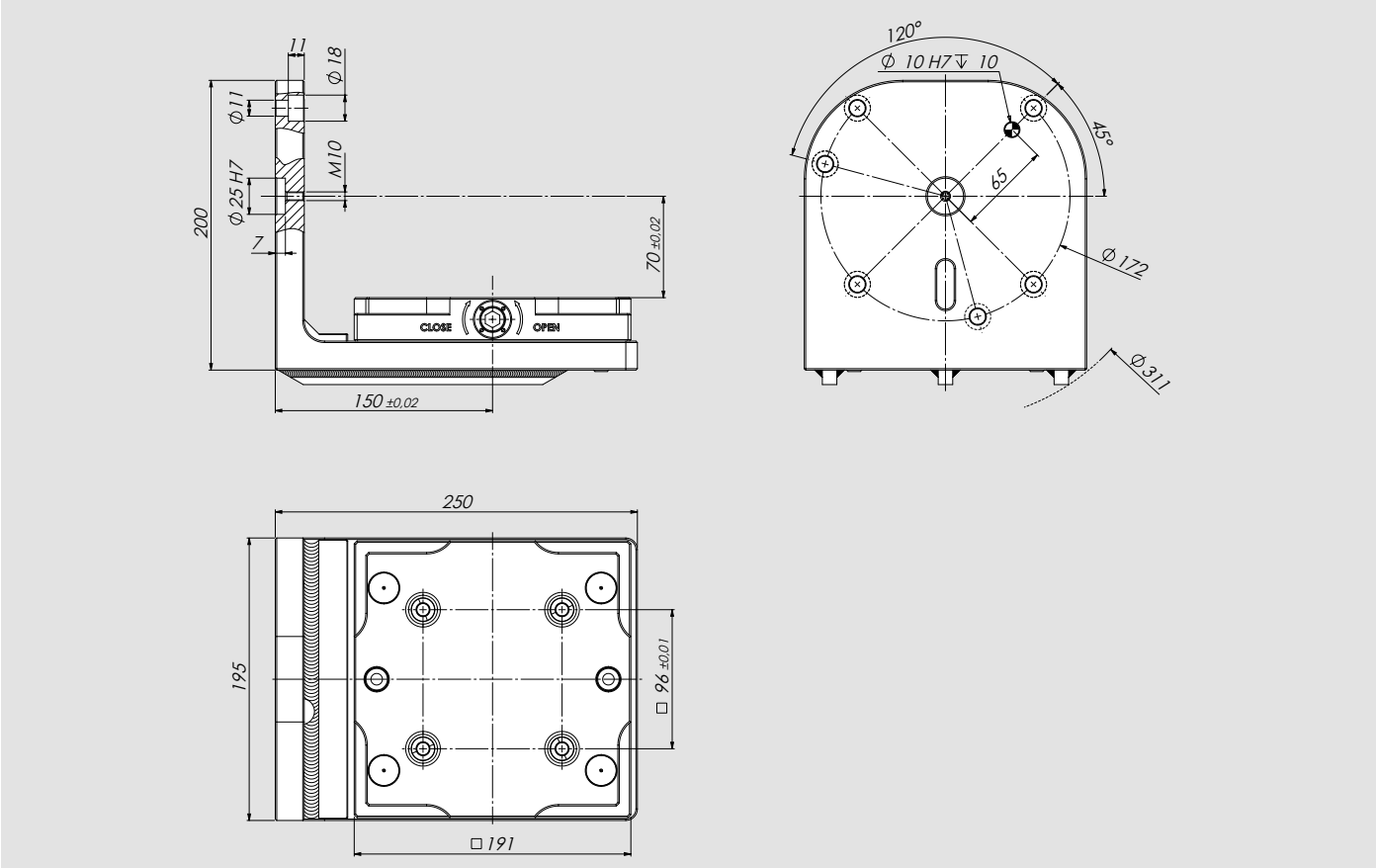

Id. No.	Weight (Kg)
46242039	14

Working example

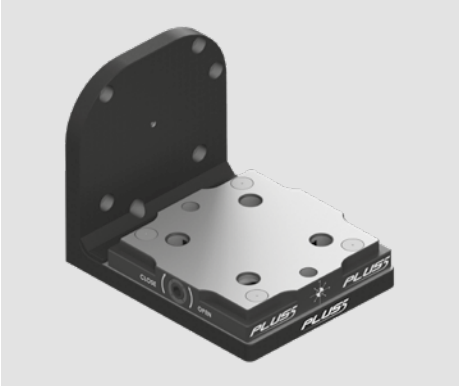

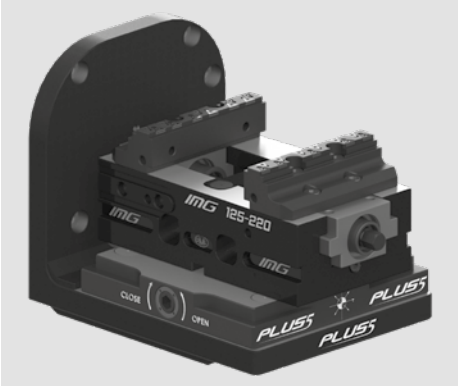

PLUS 5 - 96

MODULAR MULTIPLE TRUNNION FOR PLUS 5 - 96

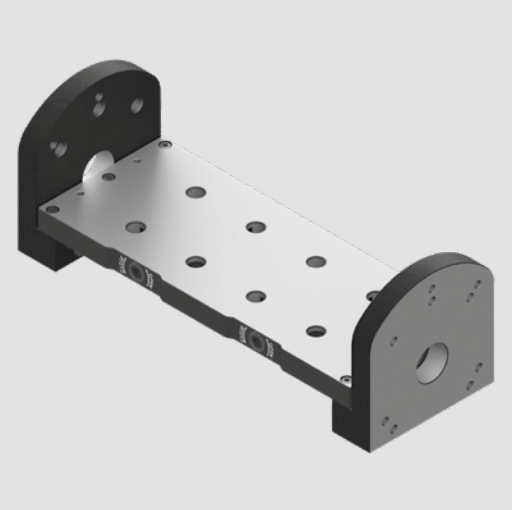

- Complete with:
  - wrench 10mm
  - n. 2 safety plates (Id. No. 46248215)
- Pins not included

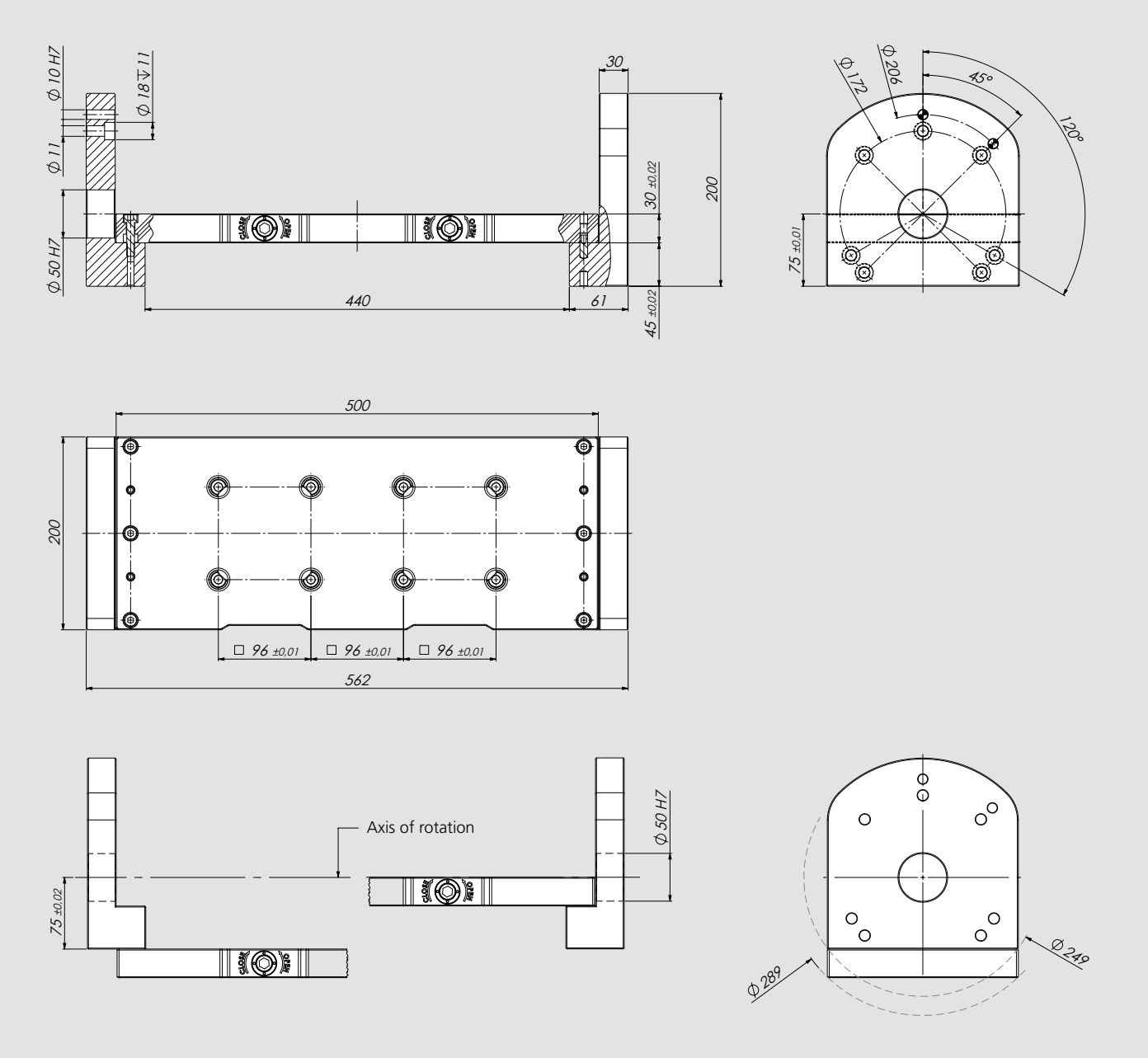

Id. No.	Weight (Kg)
46248320	43

PLUS 5 - 96

Safety plate for locking on two different modules. Complete with pins 96

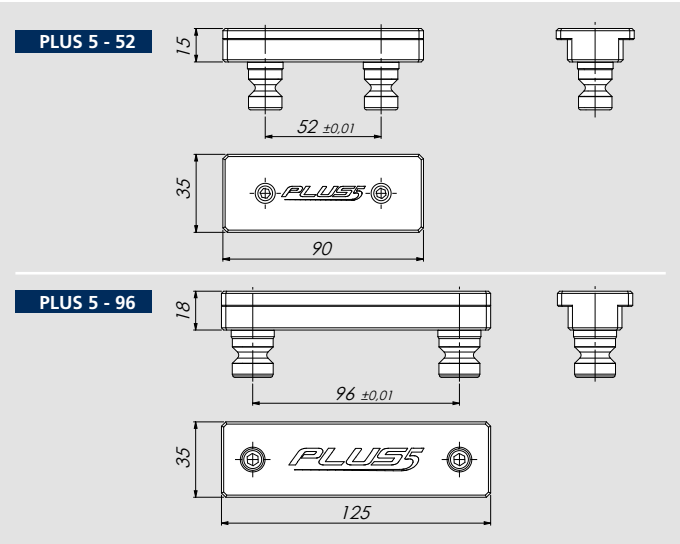

Type	Id. No.	Weight (Kg)
Plus 5 - 52	46248205	0,3
Plus 5 - 96	46248215	0,4

PLUS 5 - 52

Alignment plate complete with pins 52

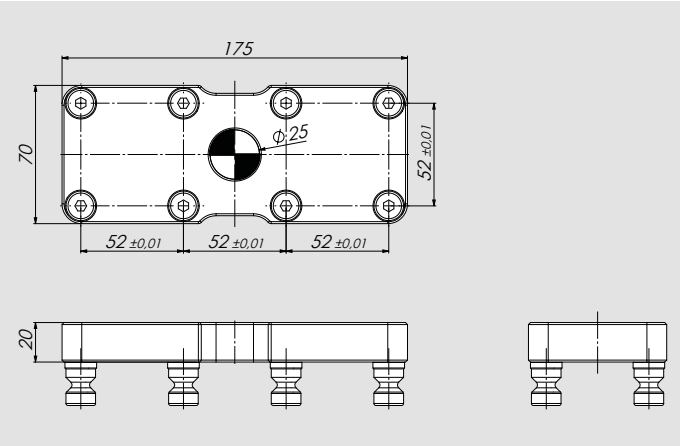

Id. No.	Weight (Kg)
46240410	2

PLUS 5 - 96

Alignment plate complete with pins 96

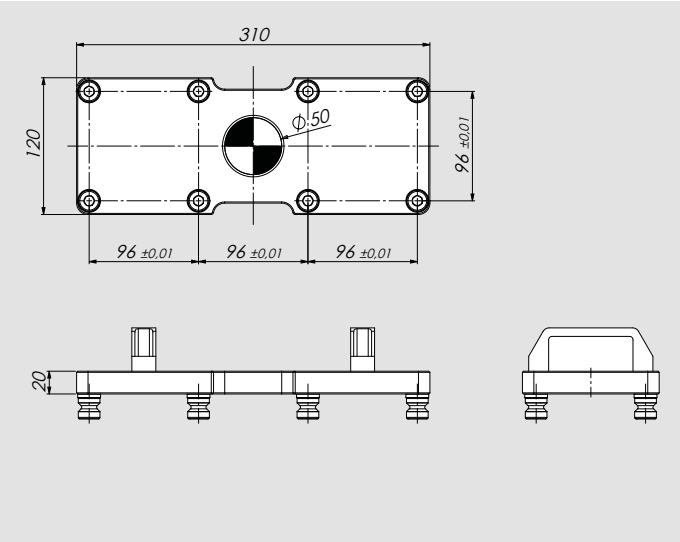

Id. No.	Weight (Kg)
46240420	6

PLUS 5 - 52

TOMBSTONE

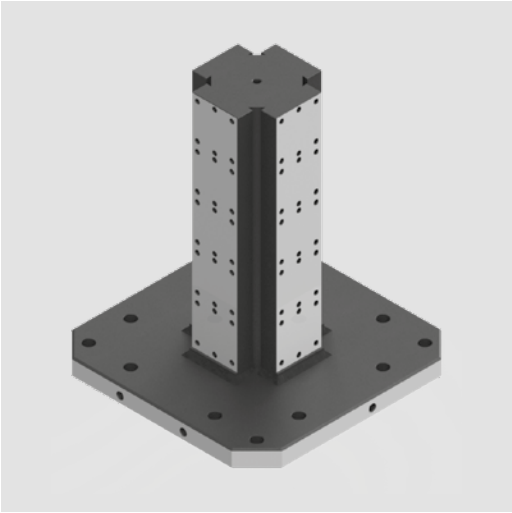

Applications / Customer Benefits

- Ideal for horizonal machines
- Compact design

Technical features

- Material: steel

Standard equipment

Steel tombstone complete with fixing screws and dowel pins

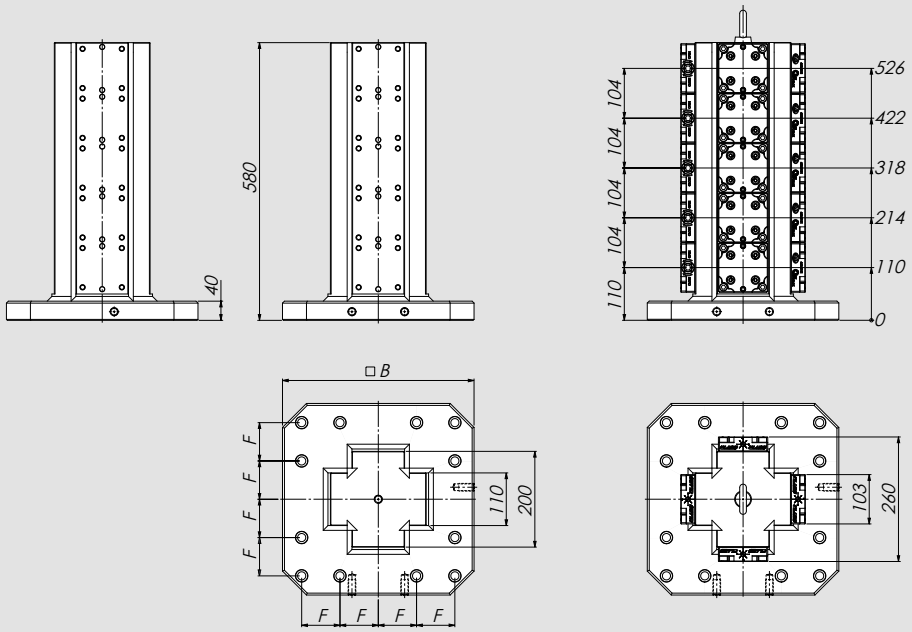

Type	Id. No.	B	F	Weight	Weight (only tombstone)
Tombstone Plus 5 - 52 - Base 400	46247110	400	80	162 Kg	121 Kg
Tombstone Plus 5 - 52 - Base 500	46247120	500	100	190 Kg	148 Kg

Working example

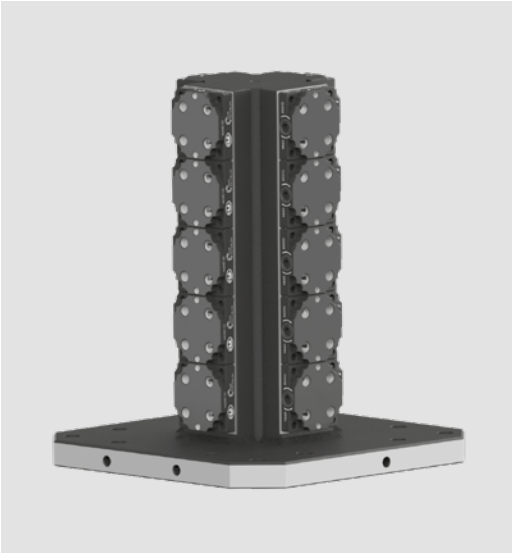

PLUS 5 - 96

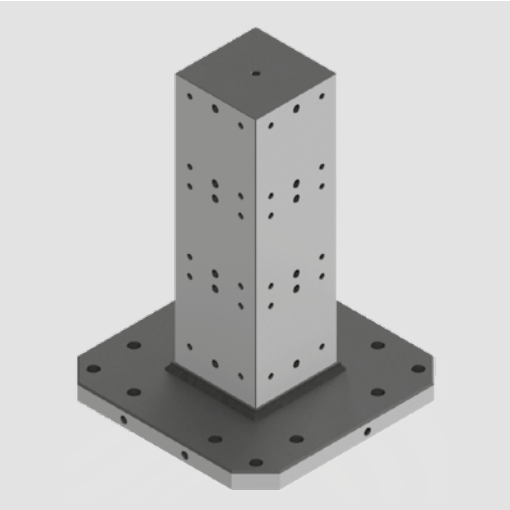

Applications / Customer Benefits

- Ideal for horizonal machines
- Compact design

Technical features

- Material: steel

Standard equipment

Steel tombstone complete with fixing screws and dowel pins

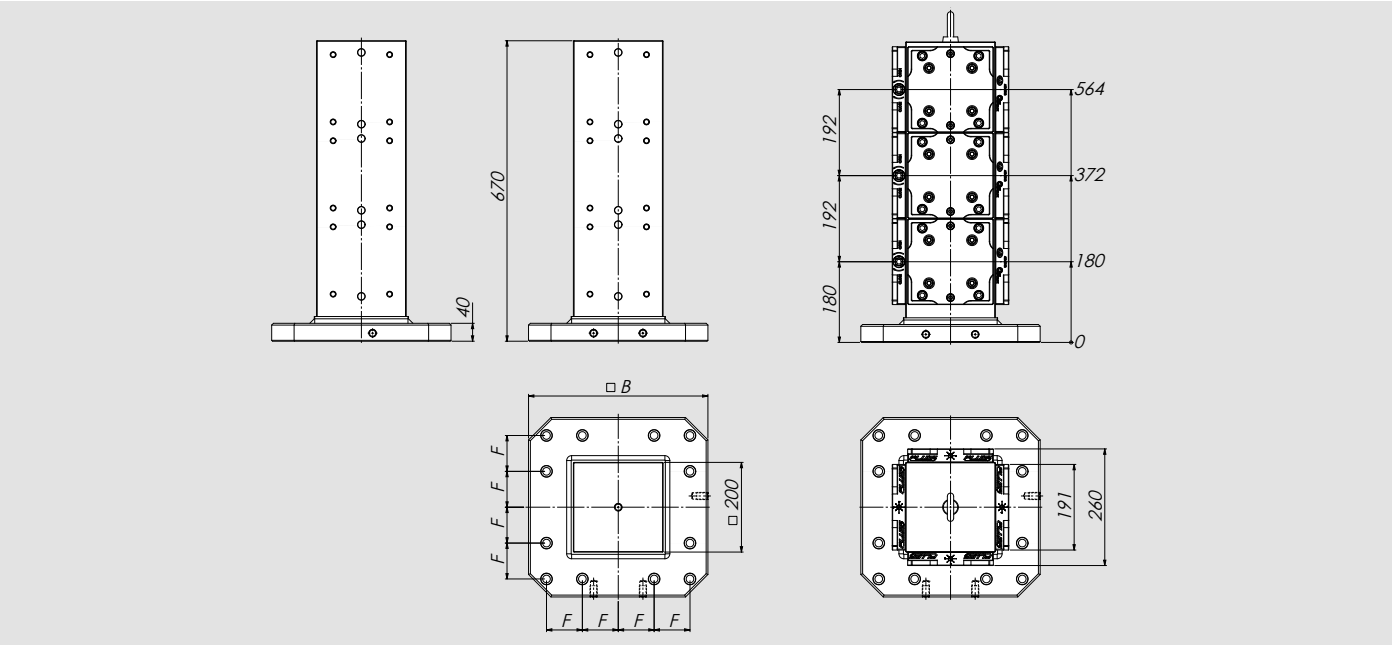

Type	Id. No.	B	F	Weight	Weight (only tombstone)
Cubo Plus 5 - 96 - Base 400	46247210	400	80	253 Kg	160 Kg
Cubo Plus 5 - 96 - Base 500	46247220	500	100	280 Kg	187 Kg

Working example

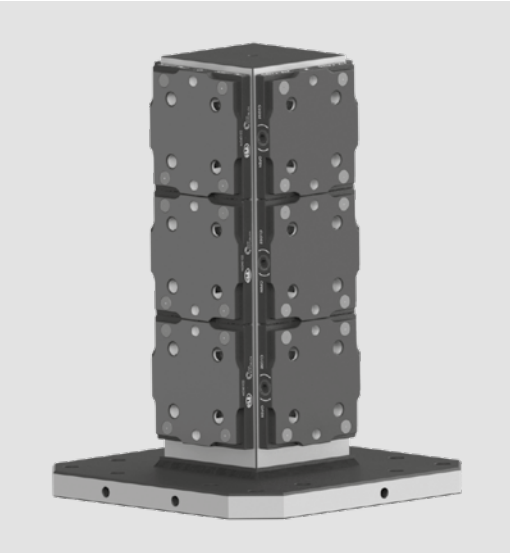

PLUS 5 - 52/96
Pair of Clamps

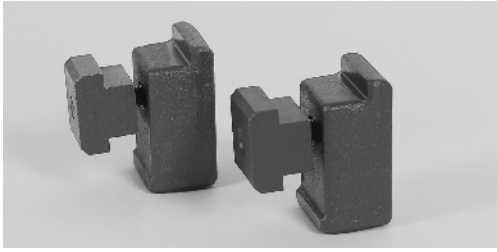

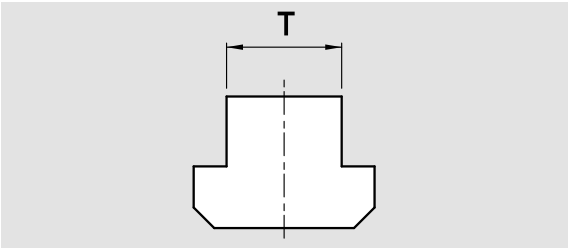

Type	mm 12	mm 14	mm 16	mm 18	mm 20	mm 22
PLUS 5 52/96	58022792	58022793	58022794	58022795	58022796	58022797

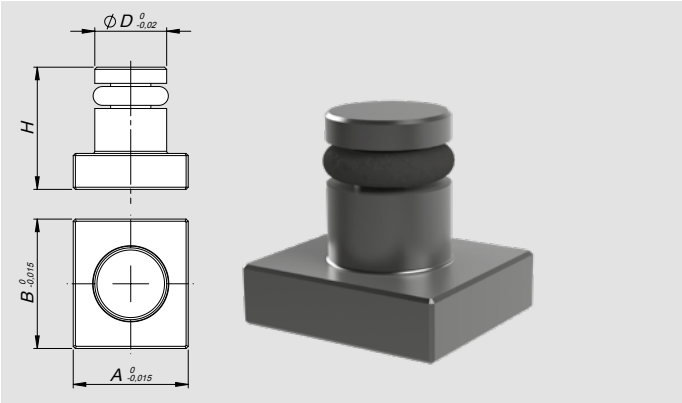

Key only for:
- Plus 5 52
- Plus 5 Index 96

Id. No.	A	B	H	D
58341393	12	14	17	10
58341395	16	18	17	10

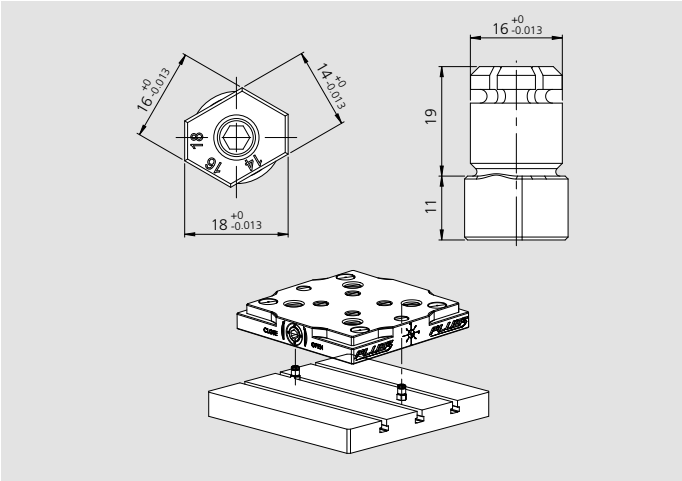

Multi-Slot screw for Plus 5 96

Type	Id. No.
Multi-Slot 14 / 16 / 18	71290182

PLUS 5 - 52/96
Steel protection cap

Type	Id. No.	Weight (Kg)
Set 4 caps Plus 5 52	46240314	0,08
Set 4 caps Plus 5 96	46240324	0,16
Protection cap Plus 5 52	46240310	0,02
Protection cap Plus 5 96	46240320	0,04

COLLECT CHUCK ER50

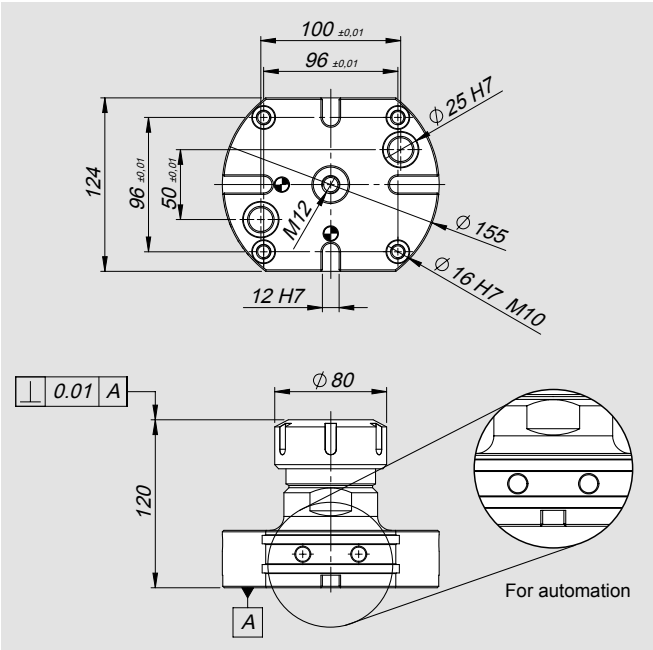

Id. No.
46233500

Working example

Tdm
TORQUE DIE & MOLD

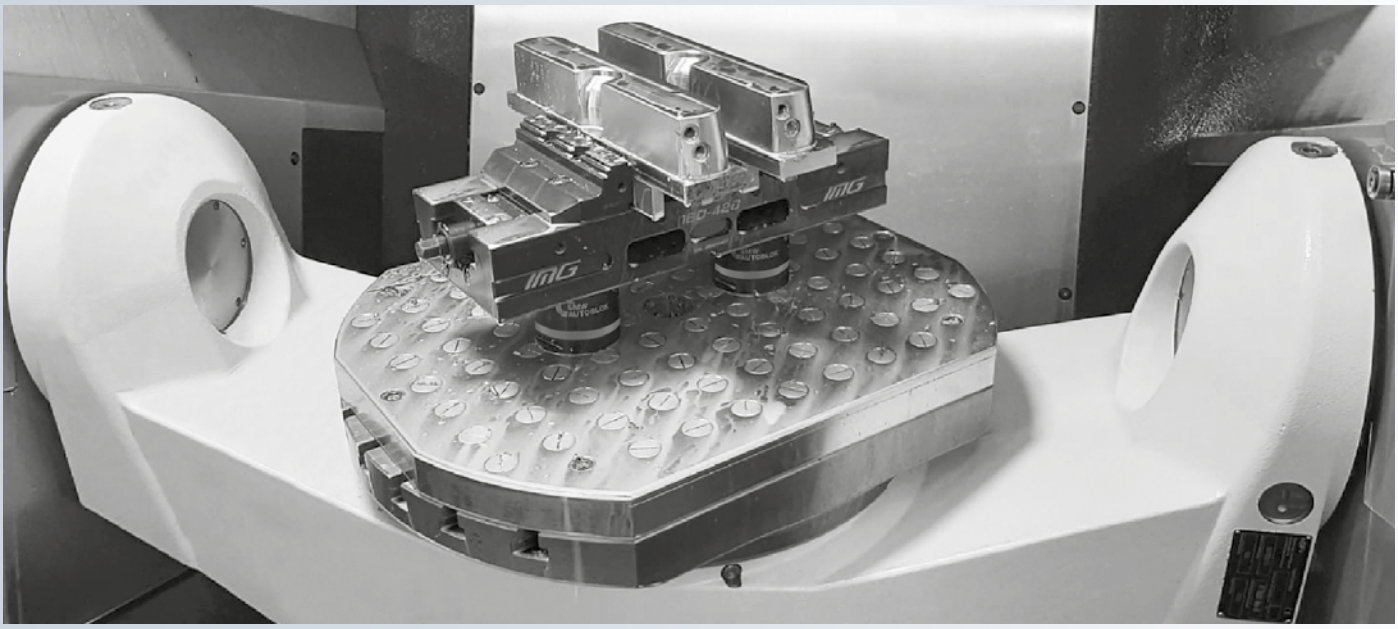

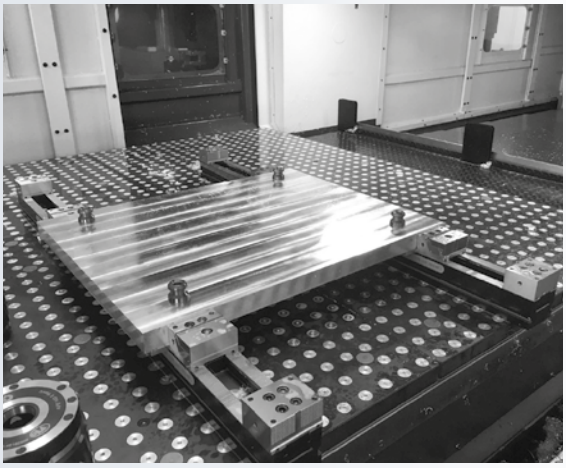

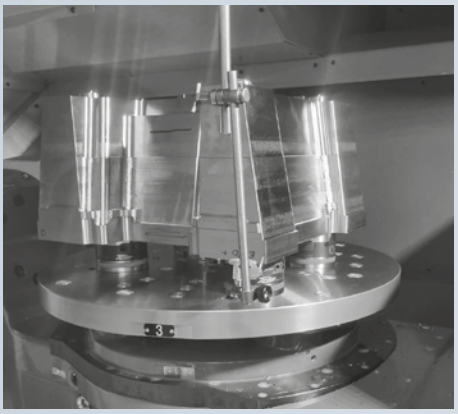

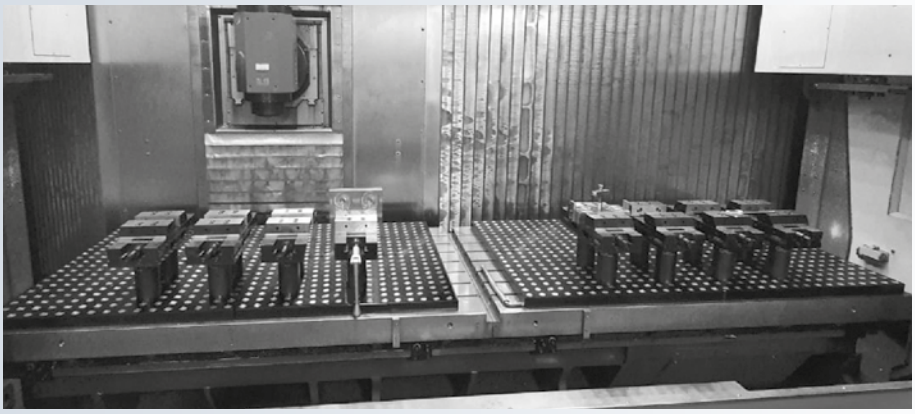

TORQUE DIE & MOLD

Page 0.2.6

TDM 88

TORQUE DIE & MOLD

- TDM 88
- TDM 88 INDEX
- TDM 88 Adjustable

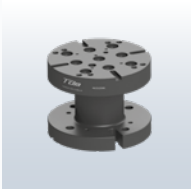

Page 0.2.8

TDM 88

Accessories

- Pins
- Rings
- Bushes
- Rises
- Spacers
- Tombstones

Page 0.2.24

TDM 48

TORQUE DIE & MOLD

- TDM 48
- TDM 48 INDEX

Page 0.2.28

TDM 48

Accessories

- Pins
- Bushes
- Spacer

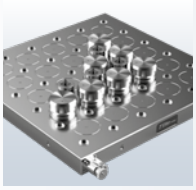

Page 0.2.32

TDM MAG

- Magnetic system
  for clamping pieces in milling

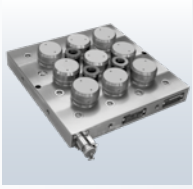

Page 0.2.38

TDM MAG

- Magnetic plane
- TDM MAG 48

Page 0.2.39

TDM MAG

Accessories

- Pins
- Bush
- Extensions
- Control unit

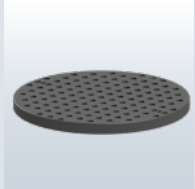

Page 0.2.44

TDM

Accessories

- Plates
- Minipallets
- Spacers
- Adaptor

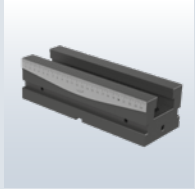

Page 0.2.51

OP 10

Page 0.2.54

WPS-PPD

Workpiece preparation device

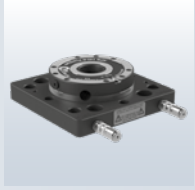

Page 0.2.63

TDM - APS

- APS 140
- Flanges

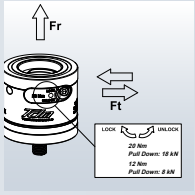

Page 0.2.70

TDM

Technical informations

TORQUE DIE & MOLD

Benefits

PATENT PENDING

- **Only 3.5 rotation Lock-Unlock**
- **High jaws surface contact**
  (Pull down force 18 Kn at 20 Nm)
- **Repeatability <0,005 mm**
- **Holding force up to 100 Kn**

- **Self centered self compensating jaws**

WATCH THE VIDEO

A.T. swinging pin

Benefits

NEW

- Unique pin with twin swinging screw function and floating centering ring of X; Y
- Ideal for pieces / molds after hardening

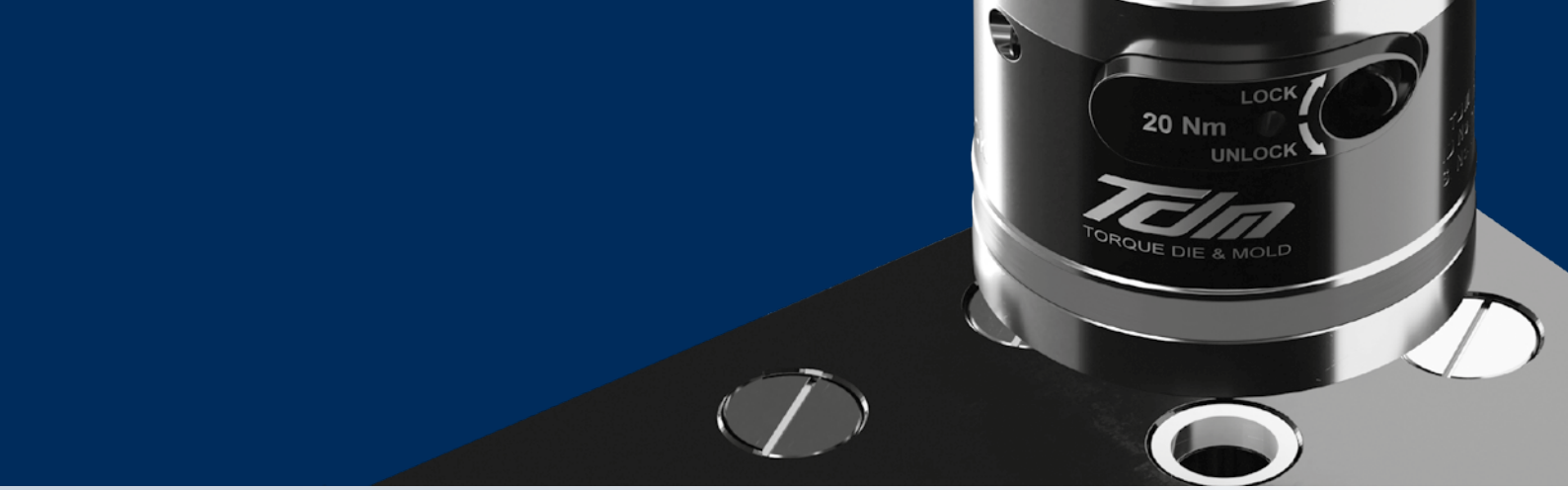

Working examples

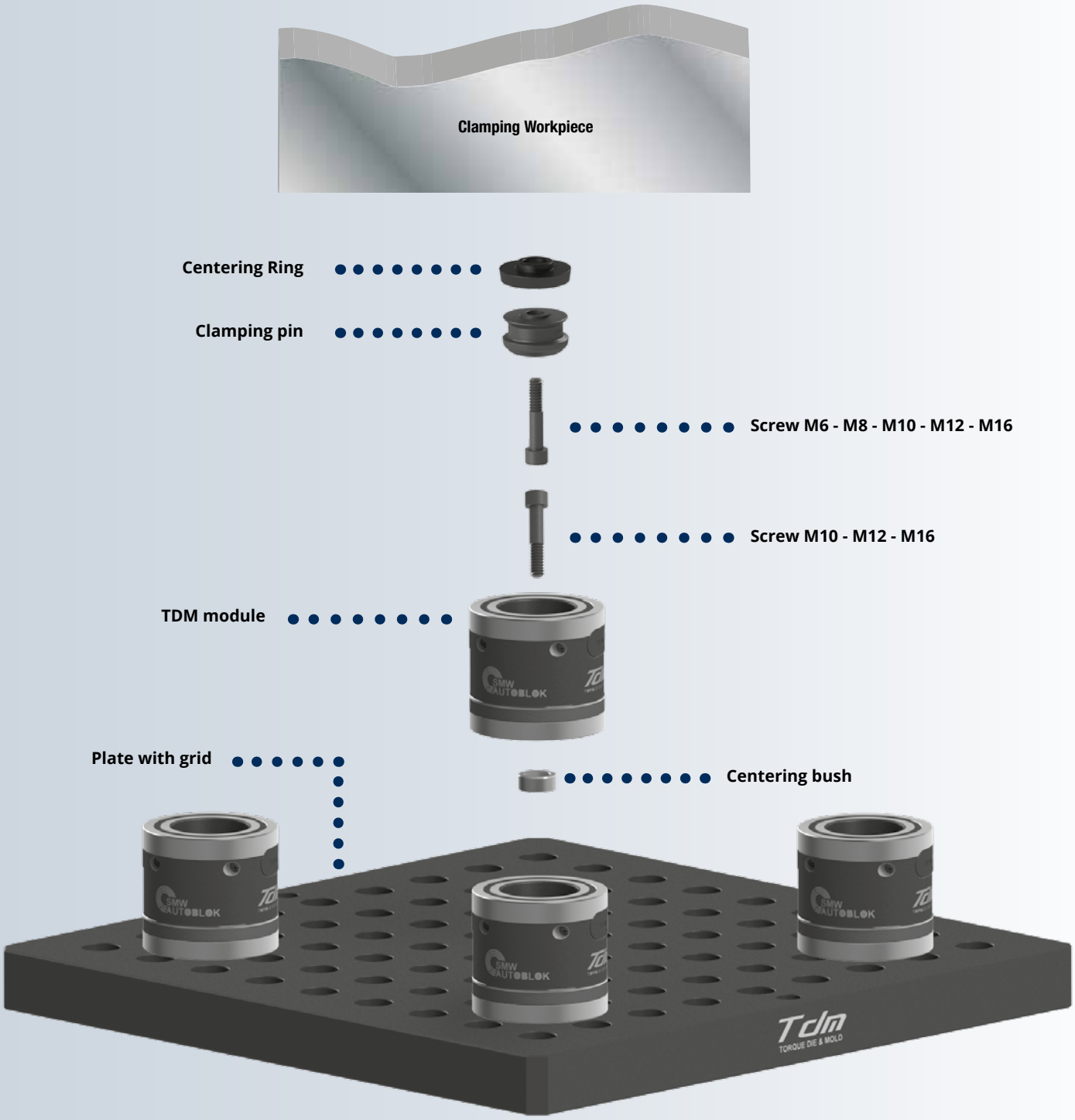

TORQUE DIE & MOLD

Index Working examples

Centering Ring

Clamping pin

Screw M6 - M8 - M10 - M12 - M16

TDM module

Centering Ring

Clamping pin

Screw M10 - M12 - M16

TDM module

Centering Ring

Clamping pin

TDM INDEX module

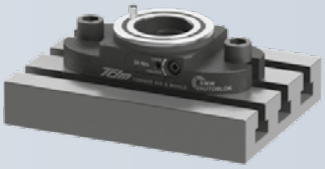

TDM 88

Manual Zero Point Clamping System for the Workpiece Direct Clamping

Application/customer benefits

- Huge reduction of set-up times for highest efficiency
- Safe workpiece clamping with maximum holding forces and highest repeatability
- Ideal for mold making and 5-axis machining
- Single quick-actuation for the rapid opening and closing of the modules with only 3.5 rotations
- Flexible configurations for customized use
- Compatible to the proven zero point system APS

Technical features

- Diameter 88mm
- Pull down 18 kN
- Max. torque 20 Nm
- Repeatability < 0.005 mm
- Holding force up to 100Kn
- 2 clamping slides for maximum hold while clamping
- Fully sealed - low maintenance
- Complete with screw 12.9

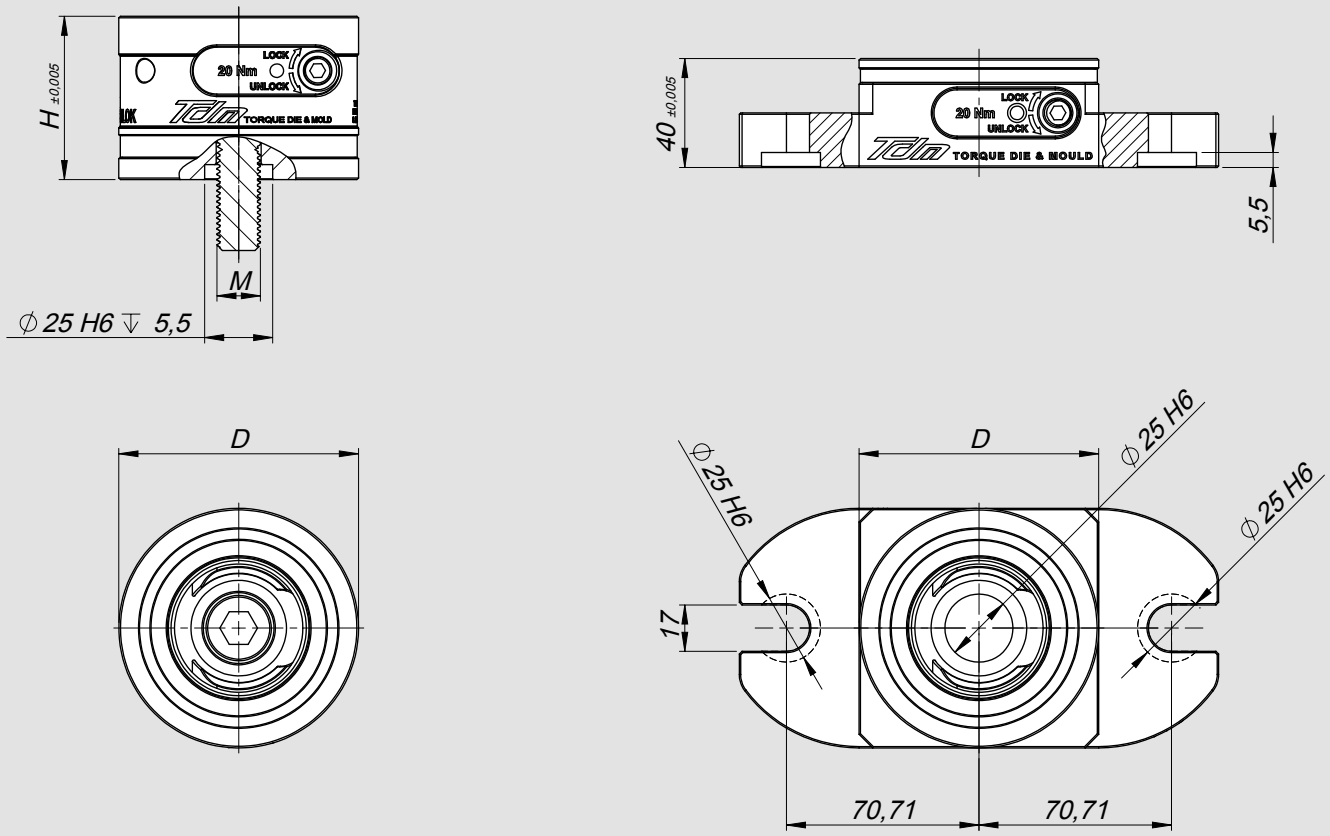

Module	Id. No.	D	H	M*
TDM88 H40	46230101	88	40	-
TDM88 H60	46230102	88	60	M16 **
TDM88 H80	46230103	88	80	M16 ***
TDM88 H160	46230104	88	160	M16 ****

* Complete with screw 12.9

** TCEI-BAS M16X40 UNI 9327 DIN 7984 (Thin head cap screw)
*** TCEI M16X50
**** TCEI M16X110

TDM 88 Index

Application/customer benefits

- Huge reduction of set-up times for highest efficiency
- Safe workpiece clamping with maximum holding forces and highest repeatability
- Ideal for mold making and 5-axis machining
- Single quick-actuation for the rapid opening and closing of the modules with only 3.5 rotations
- Flexible configurations for customized use
- Compatible to the proven zero point system APS

Technical features

- Diameter 88mm
- Pull down force 18 kN
- Max. torque 20 Nm
- Repeatability < 0.005 mm
- Holding force up to 100Kn
- 2 clamping slides for maximum hold while clamping
- Fully sealed - low maintenance
- Complete with screw 12.9

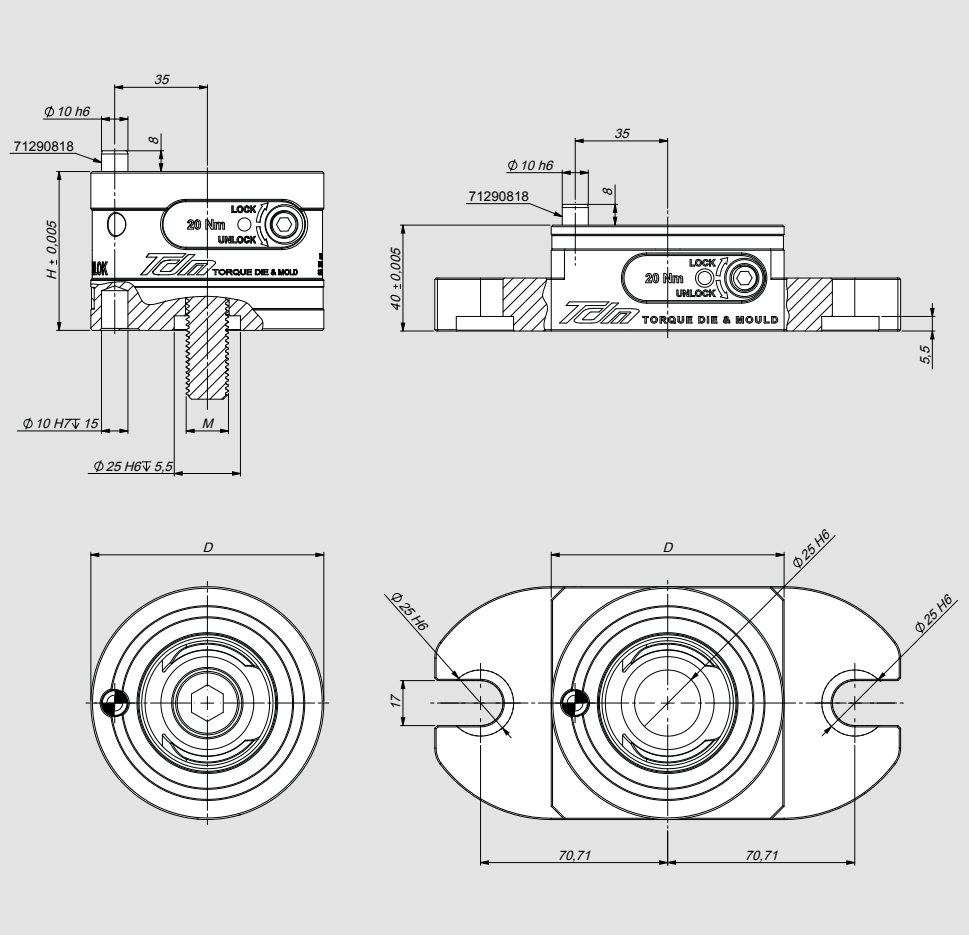

Working example

Index Module	Id. No.	D	H	M*
TDM88 Index H40	46230111	88	40	-
TDM88 Index H60	46230112	88	60	M16 **
TDM88 Index H80	46230113	88	80	M16 ***
TDM88 Index H160	46230114	88	160	M16 ****

* Complete with screw 12.9

** TCEI-BAS M16X40 UNI 9327 DIN 7984 (Thin head cap screw)
*** TCEI M16X50
**** TCEI M16X110

TLM

TDM LEVELLING MODULE

Often, some pieces may have two or more oblique locating surfaces to each other. Therefore, by fixing one of the surfaces parallel to the machine table through a locking device, the same surfaces which are not parallel to it are oblique.

In these cases, a leveling device must be incorporated between the piece and the machine tool to compensate for the angular misalignment.
A normal leveling device compensates for this misalignment by utilizing a spherical coupling.

However, unlike the **TLM**, these leveling devices can have limited stability, are subject to play, and require frequent maintenance.
Therefore, the main function of **TLM** is to be a leveling device for clamping a piece having at least two mutually oblique fixing surfaces in a stable and safe way.

TLM is fully adjustable in height +/- 5mm and can achieve full compensation from 0 degrees up to 20 degrees.

Id. No.
46232050

WATCH THE VIDEO

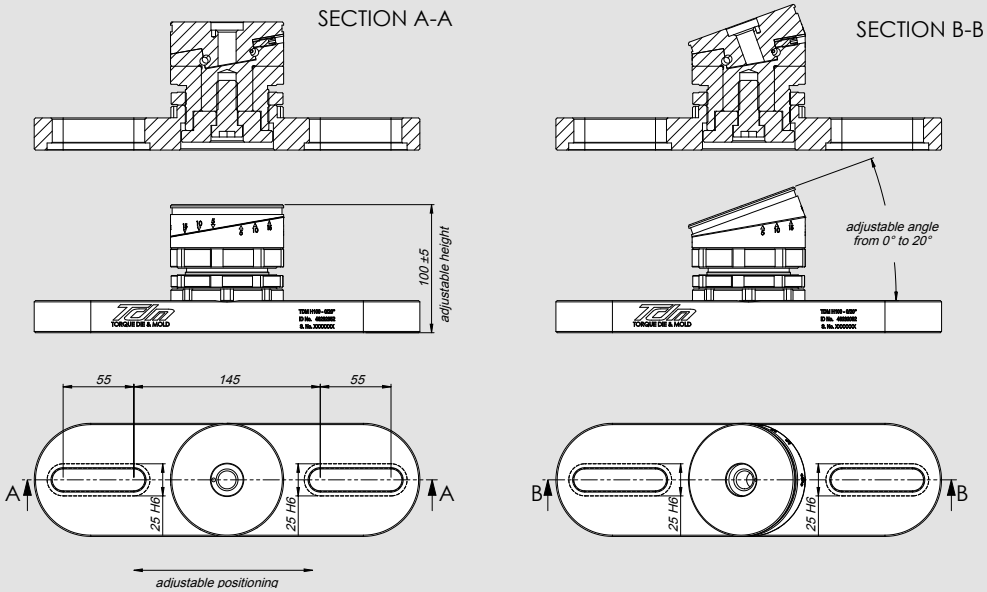

Working example

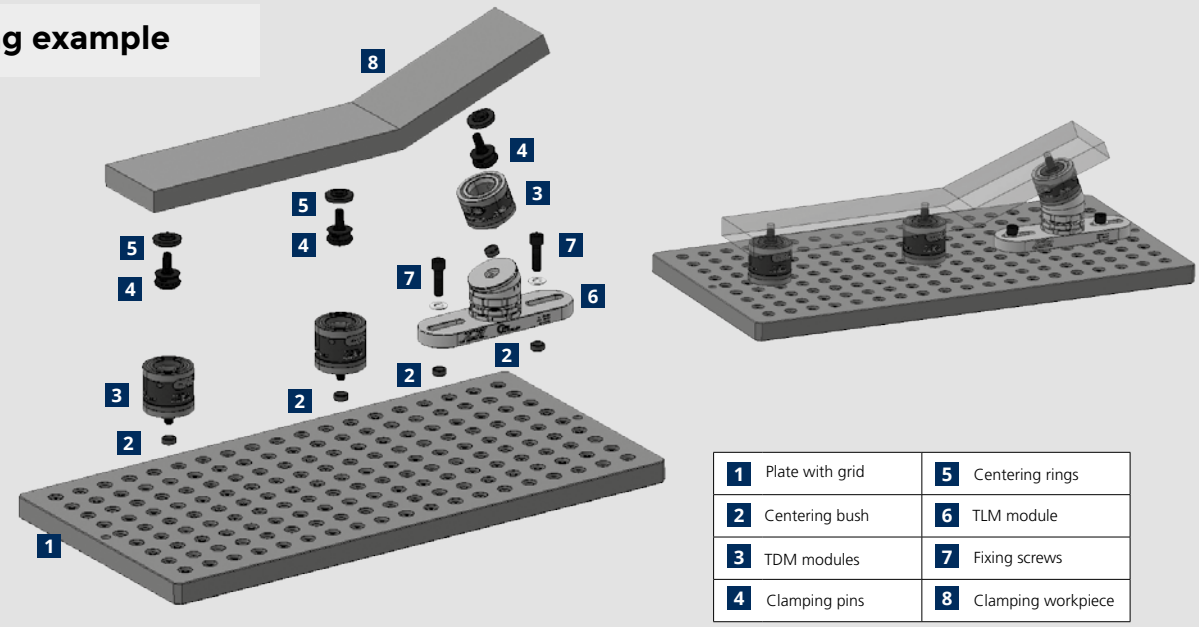

1	Plate with grid	5	Centering rings
2	Centering bush	6	TLM module
3	TDM modules	7	Fixing screws
4	Clamping pins	8	Clamping workpiece

Adjustable riser ± 6mm

TDM 88

Adjustable ± 6mm

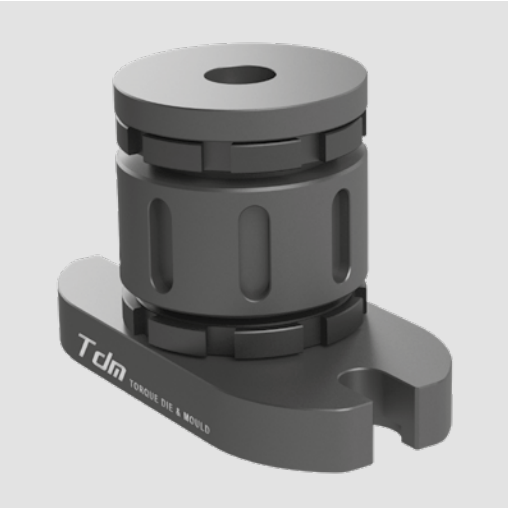

Complete with sector wrench

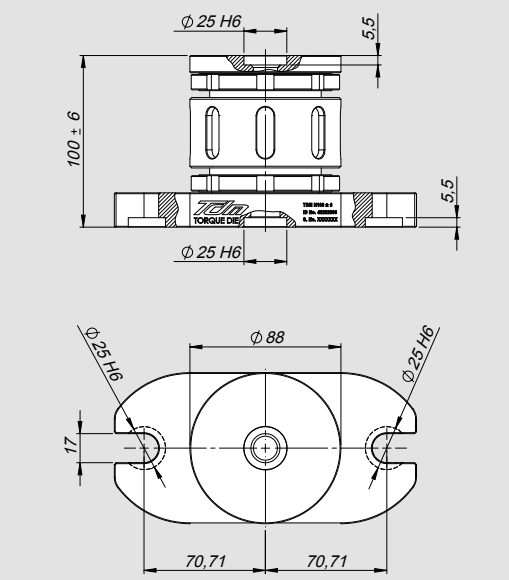

Id. No.
46232000

Working example with module

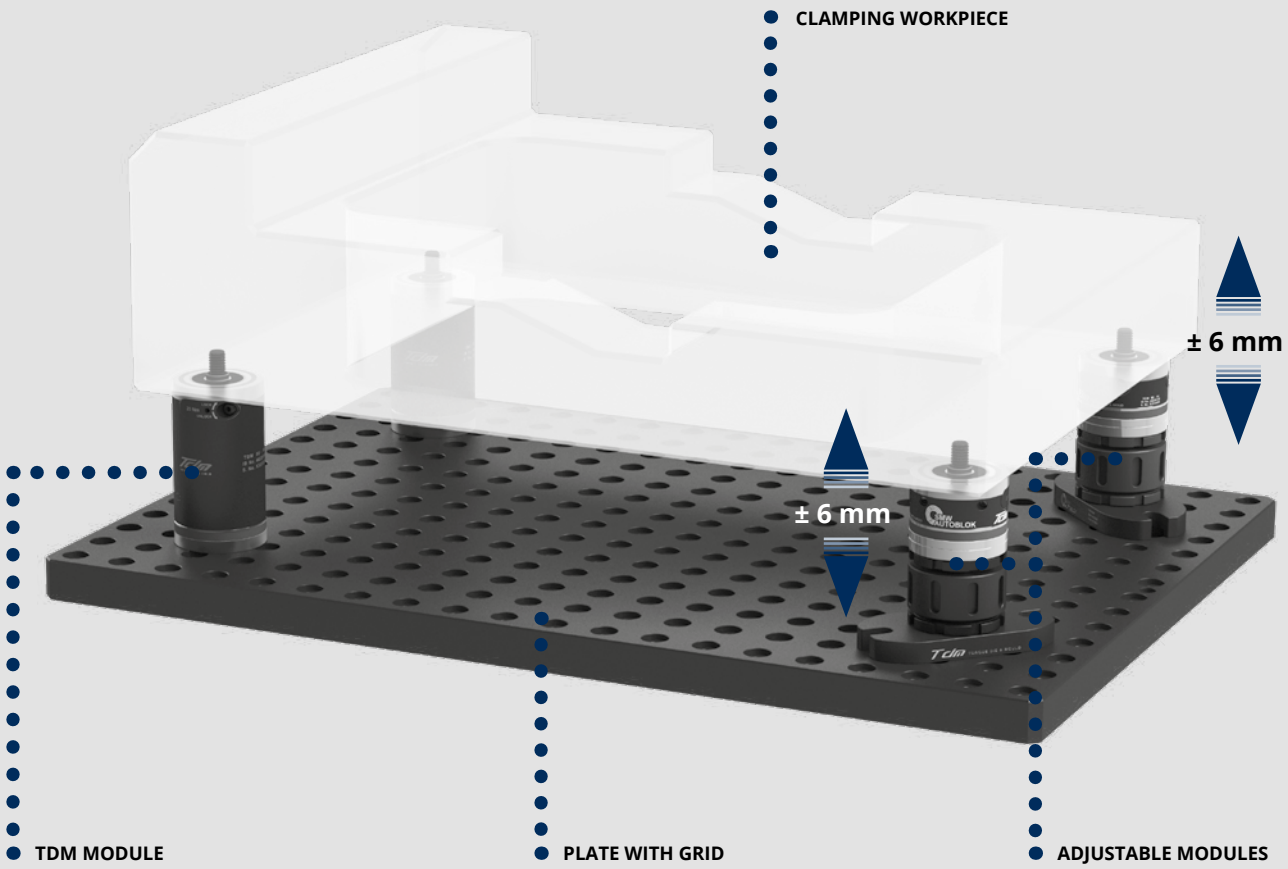

Working examples

Clamping Workpiece (only male)

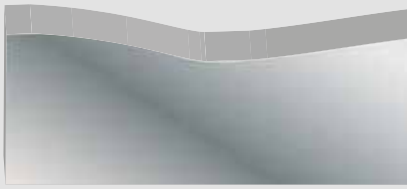

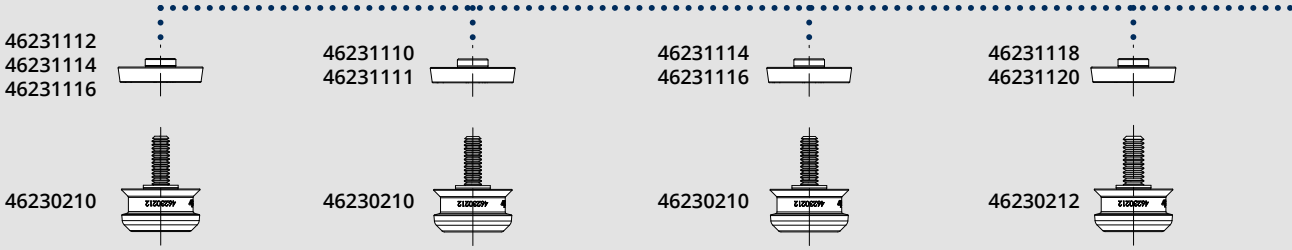

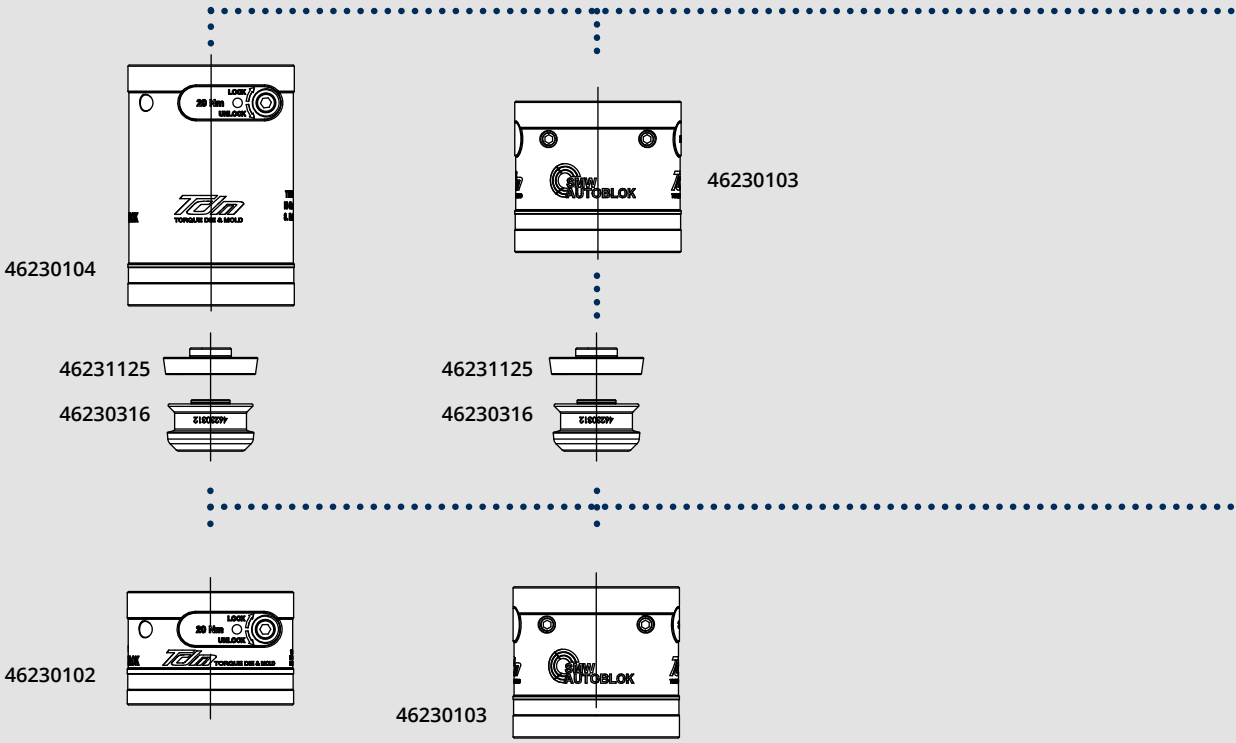

Pins

46231122
46231124
46231125
46230216
46165705
(APS160)
male
46165715 (APS160)
male (M12)
Female (M16)

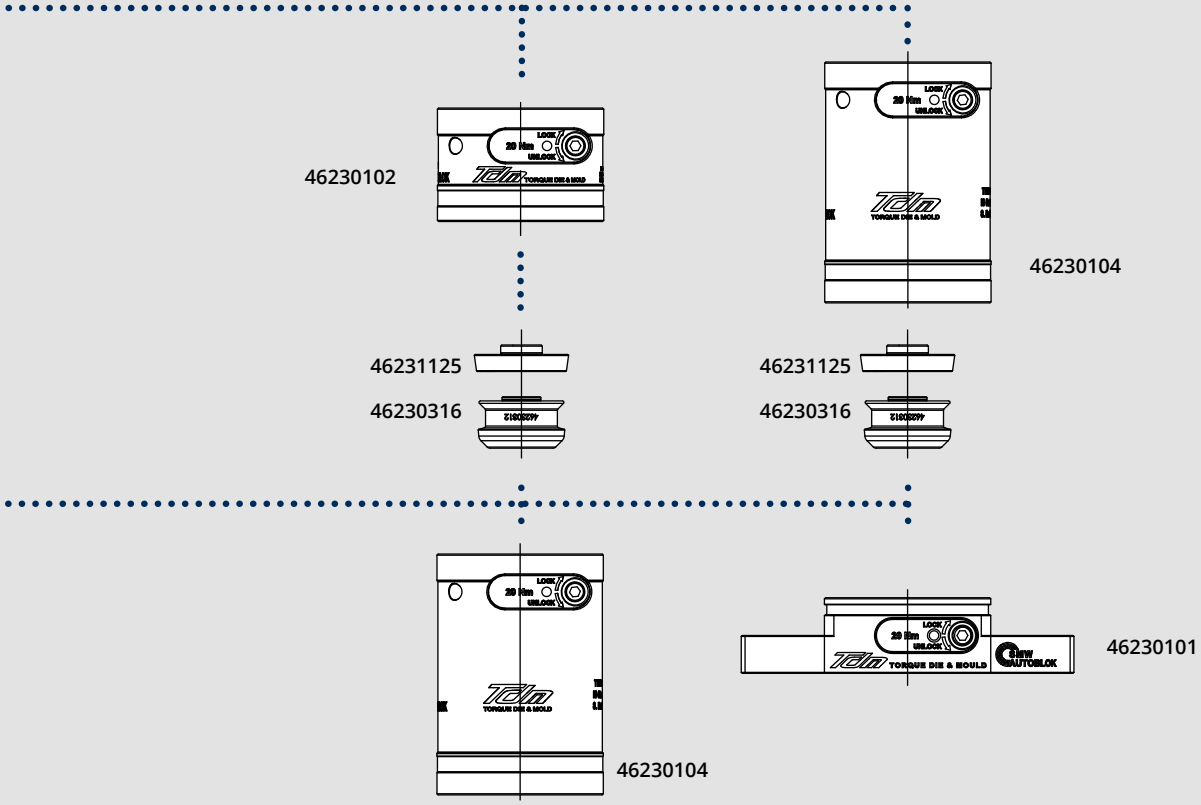
46230102
46230104
46231125
46230316
46231125
46230316
46230104
46230101

Female thread

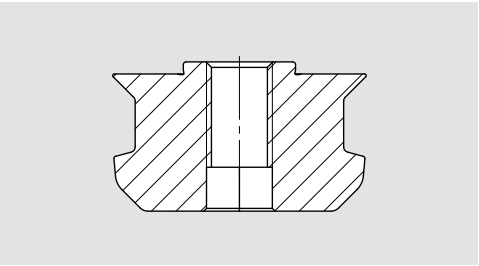

Id. No.	M
46230312	M12 F
46230316	M16 F

M16 male thread

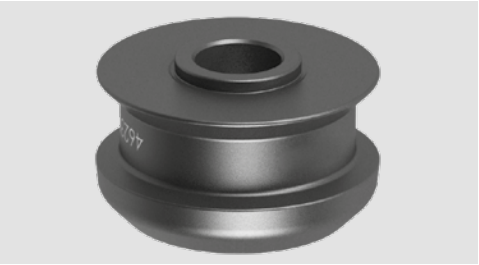

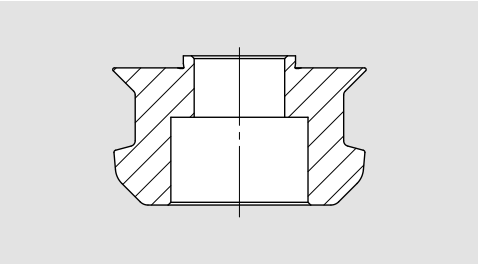

Id. No.	M
46230206 *	M6
46230208 *	M8
46230210 *	M10
46230212 *	M12
46230216 **	M16 M

* Complete with screw and reduction bush
** Complete with screw

APS 160 M16 thread

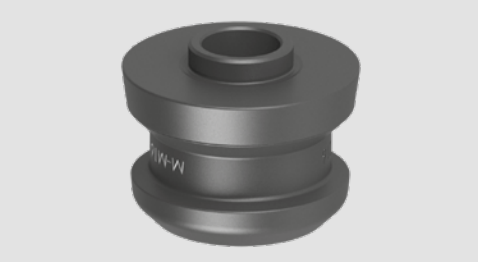

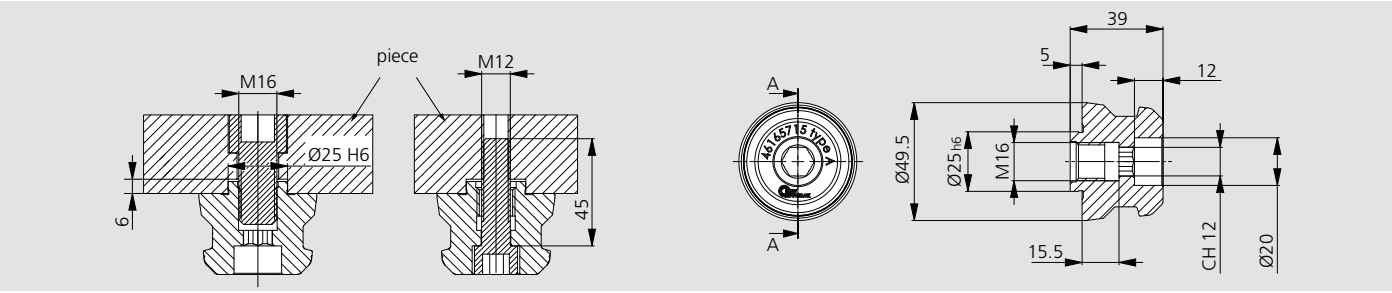

Id. No.			
46165715	A	M16	0.35
46165717	C	M16	0.35

APS 160 D17 for M16 screws 12.9

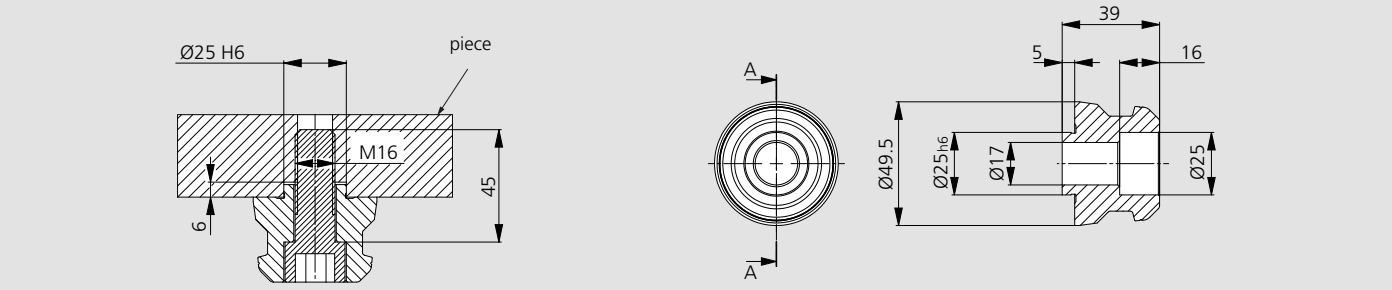

Id. No.			
46165705	A	D17	0.3
46165707	C	D17	0.3

TDM 88

Accessories

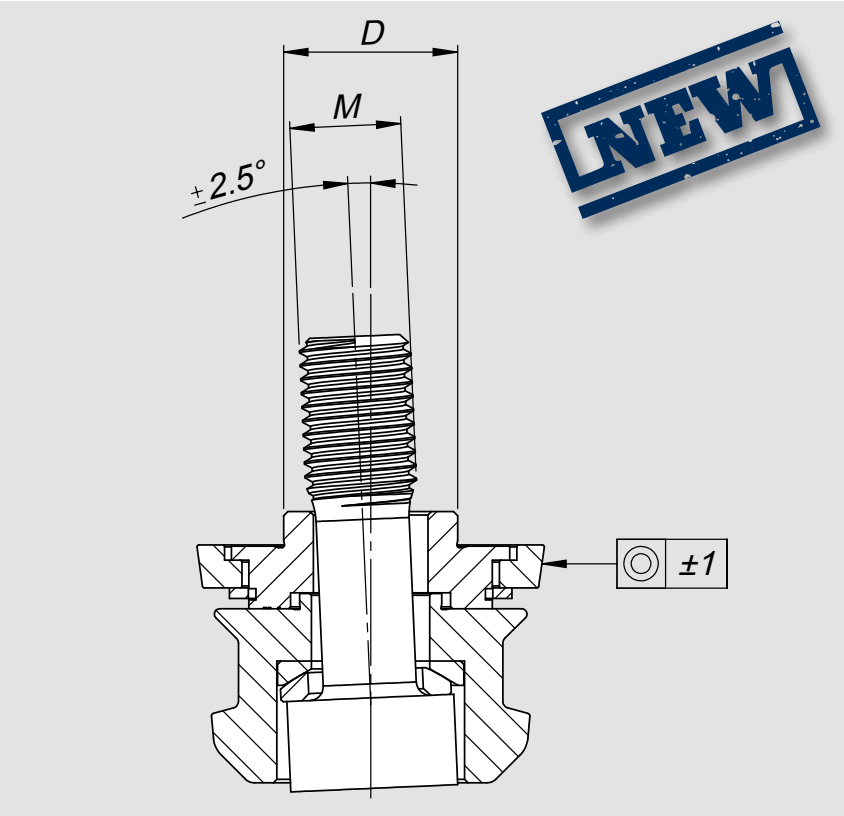

Id. No.	D	M
46231416	16 H6	M10
46231420	20 H6	M12
46231424	24 H6	M16
46231425	25 H6	M16

Working example

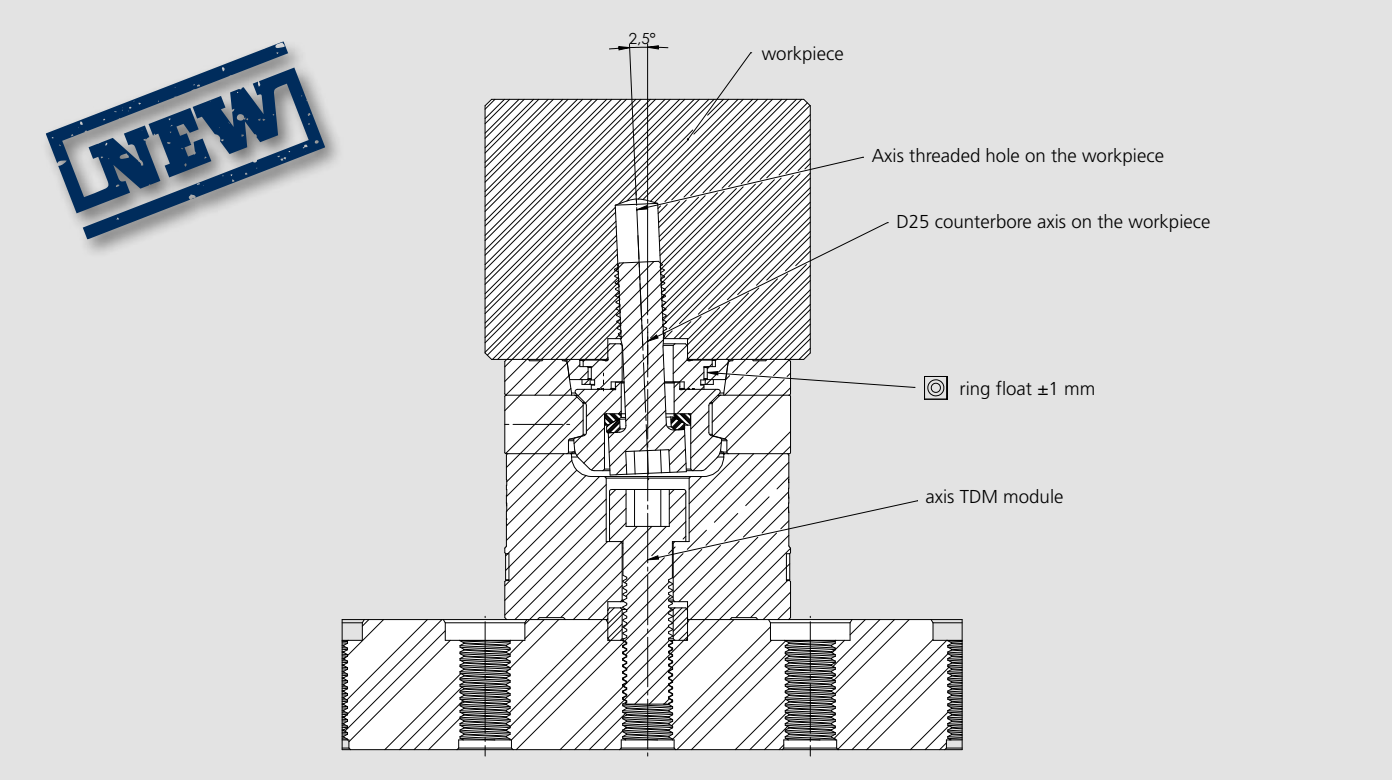

CENTERING RINGS

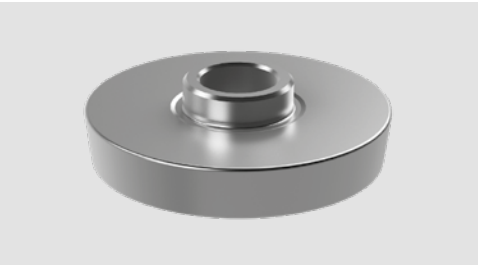

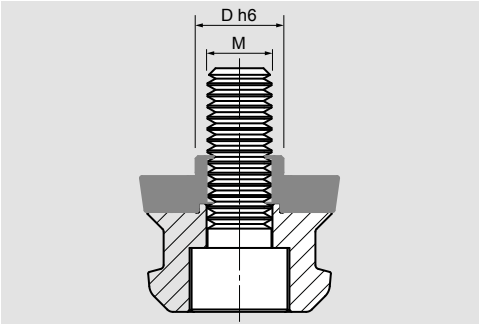

Id. No.	D	M	
46231110	10 h6	M6	A
46231111	11 h6	M6	A
46231112	12 h6	M8	A
46231114	14 h6	M8 / M10	A
46231116	16 h6	M8 / M10	A
46231118	18 h6	M10 / M12	A
46231120	20 h6	M10 / M12	A
46231122	22 h6	M10 / M12 / M16	A
46231124	24 h6	M10 / M12 / M16	A
46231125	25 h6	M10 / M12 / M16	A

Id. No.	D	M	
46231310	10 h6	M6	C
46231311	11 h6	M6	C
46231312	12 h6	M8	C
46231314	14 h6	M10	C
46231316	16 h6	M10	C
46231318	18 h6	M10 / M12	C
46231320	20 h6	M10 / M12	C
46231322	22 h6	M10 / M12 / M16	C
46231324	24 h6	M10 / M12 / M16	C
46231325	25 h6	M10 / M12 / M16	C

REDUCTION BUSH

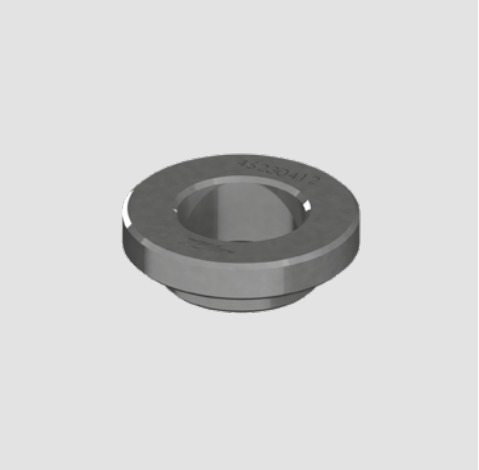

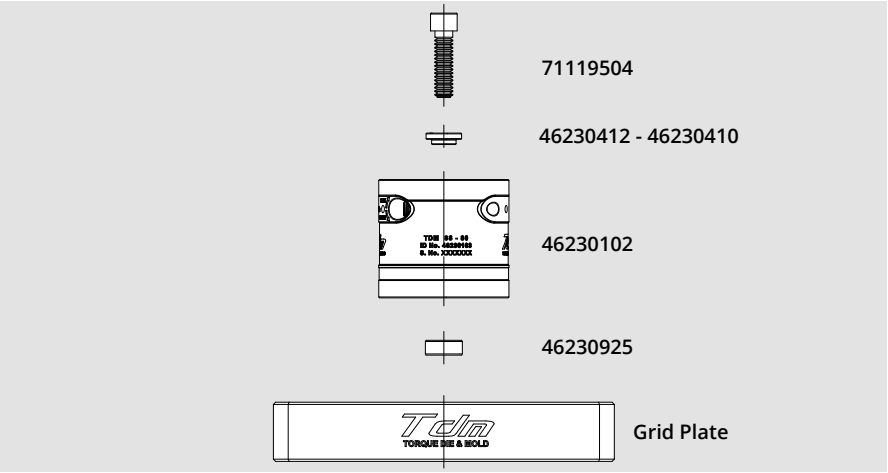

18- Assembling with reduction	M12			M10		
	Id. No. washer	Id. No. screw	screw length	Id. No. washer	Id. No. screw	screw length
TDM H 60 *	46230412	71119504	35	46230410	71119503	35
TDM H 80 *	46230412	71113107	45	46230410	71113087	45
TDM H 160 *	46230412	71119345	105	46230410	71119344	105

CENTERING BUSH

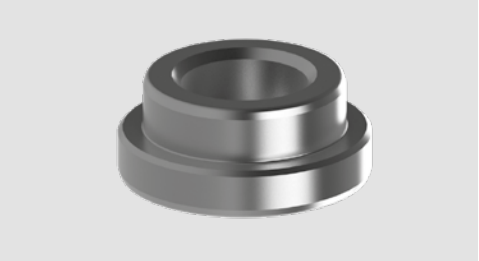

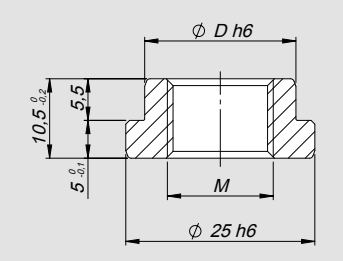

Id. No.	D	Thread for extraction * M
46230916	16	M14 x 1,5
46230918	18	M14 x 1,5
46230920	20	M14 x 1,5
46230922	22	M18 x 1.5
46230924	24	M18 x 1.5
46230925	25	M18 x 1.5

* Extractor page 0.1.46

UNIVERSAL RISER

(for TDM modules 48/88, vises IMG /V5 88-130, IMG 125-180-220, IMG 160-270 vises and PLUS 5 INDEX)

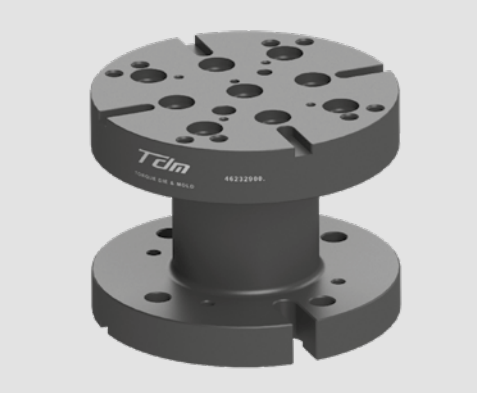

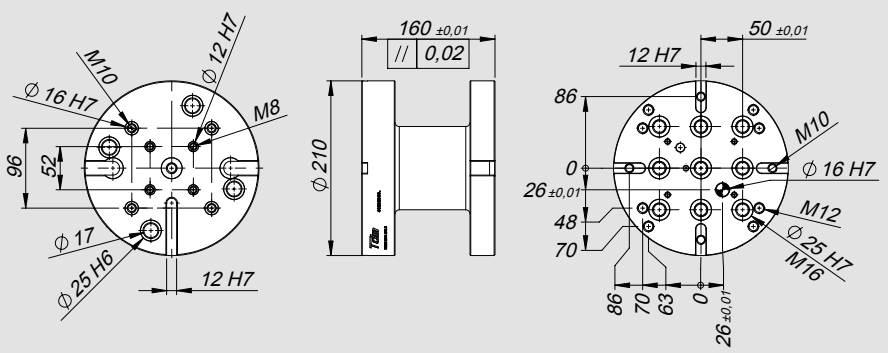

Id. No.	46232900

Working examples

RISER WITH GRID

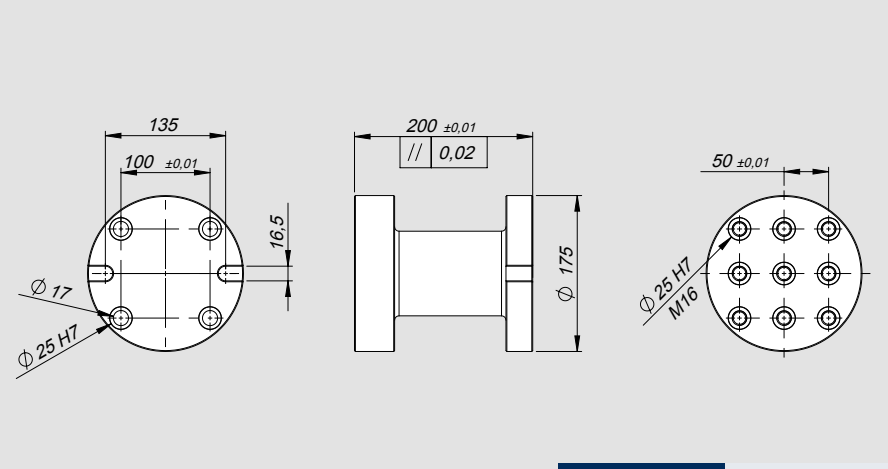

Id. No.	46232920

SPACERS with BUSH

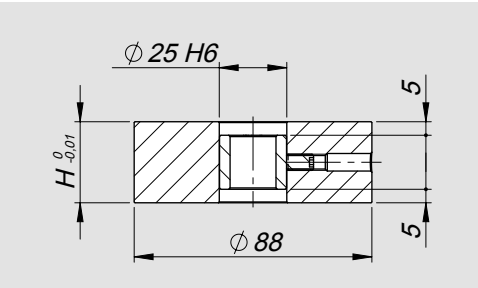

Id. No.	H
46232410	10
46232430	30

MACHINABLE SPACERS with BUSH

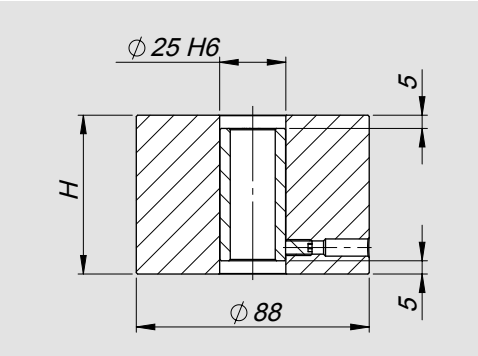

Id. No.	H
46232801	60
46232802	80

Spacer and Adaptor working examples

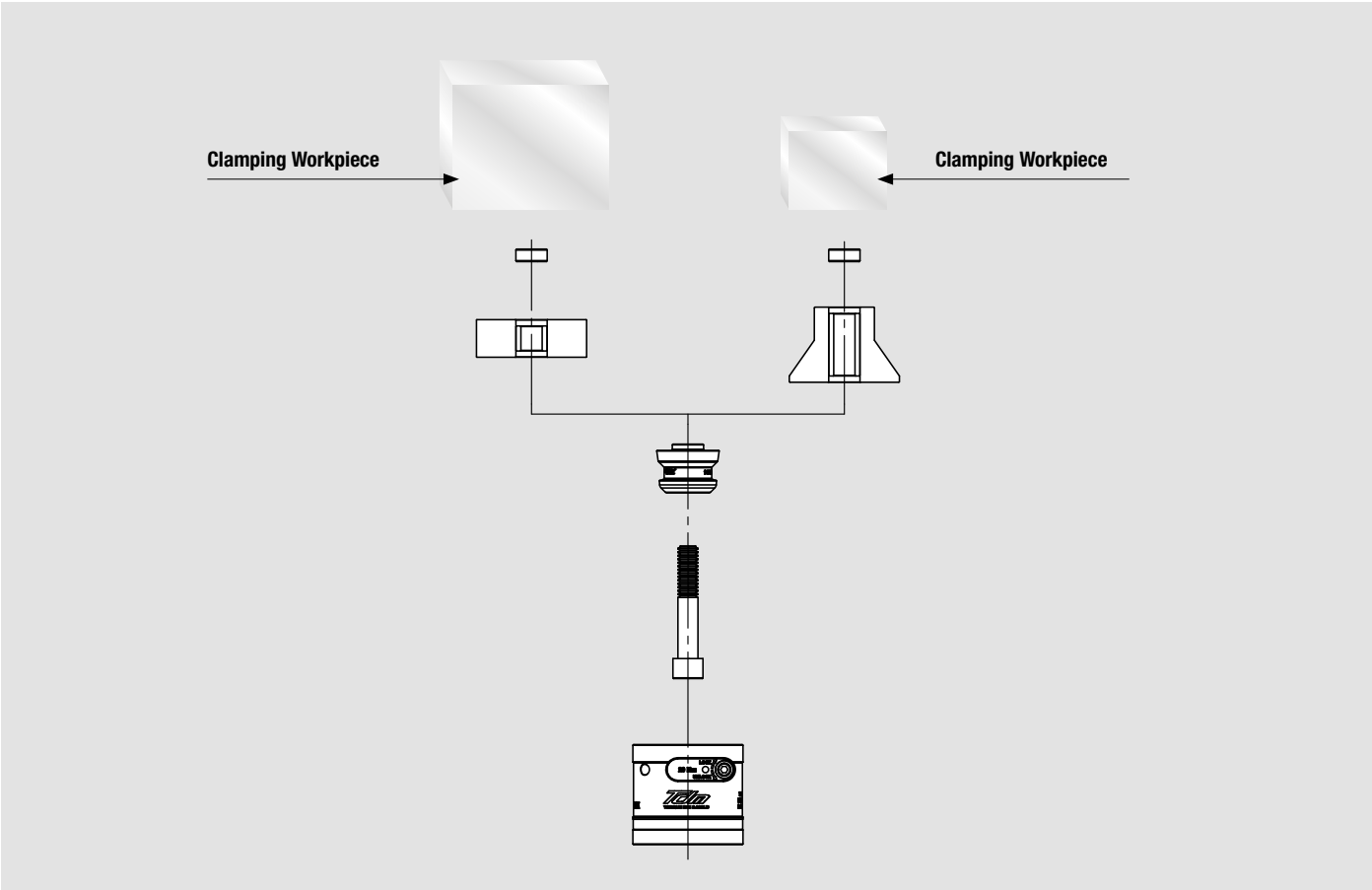

ADAPTOR from Ø88 to Ø80

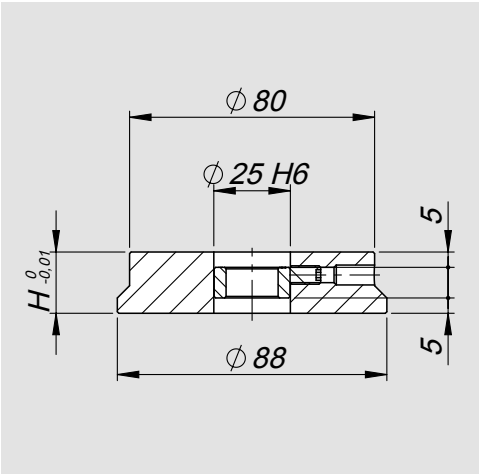

Id. No.	H
46232520	20
46232540	40
46232560	60

ADAPTOR from Ø88 to Ø48

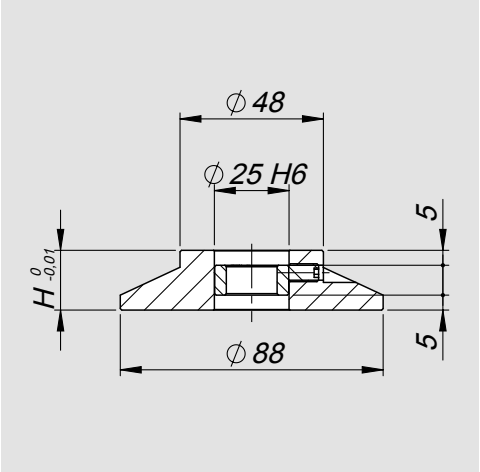

Id. No.	H
46232620	20
46232630	30
46232640	40
46232650	50
46232660	60

THIRD POINT

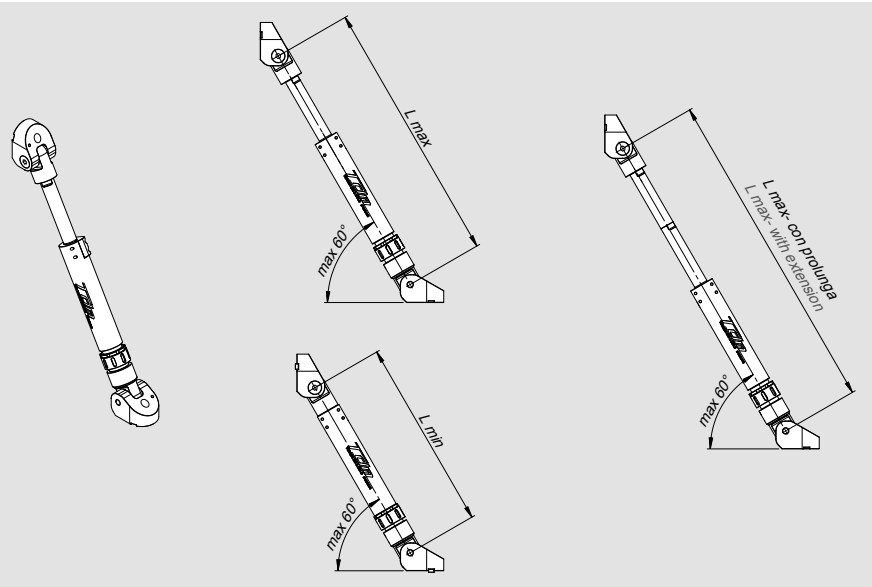

Id. No.	Lmin	Lmax	L max extension
46232110 *	614	850	1050

* Complete with sector wrench

MAGNET FOR THIRD POINT

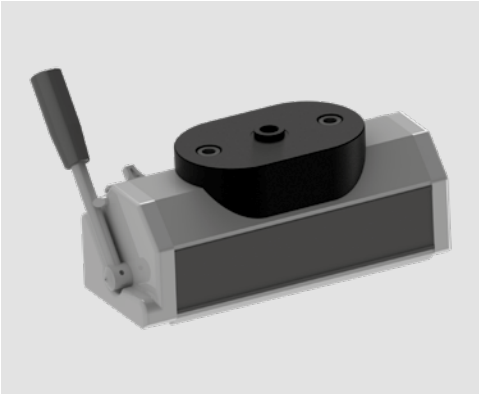

Id. No.
46232130

Working examples

EXTENSION

Id. No.
46232115

Working examples

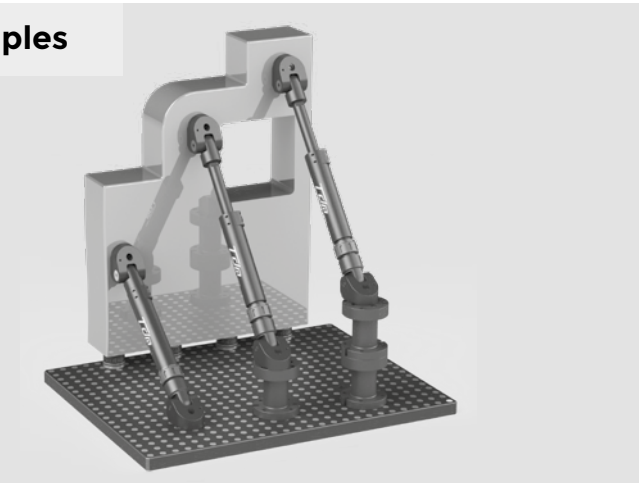

THIRD POINT W210

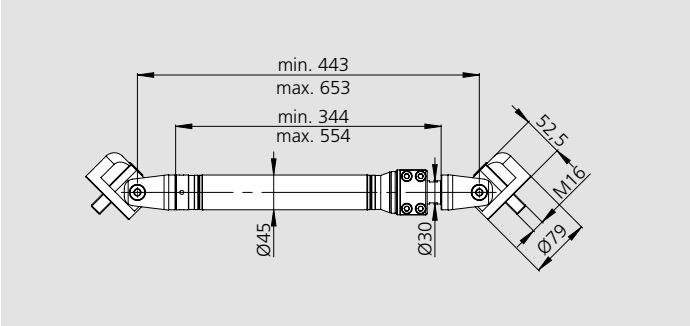

Id. No.	460395

EXTENSION ELEMENT WSE-208

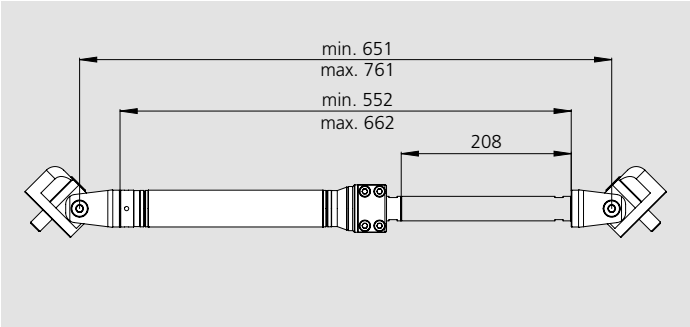

Note: max. 2-fold extendable

Id. No.	460354

FINE ADJUSTMENT WSF-10

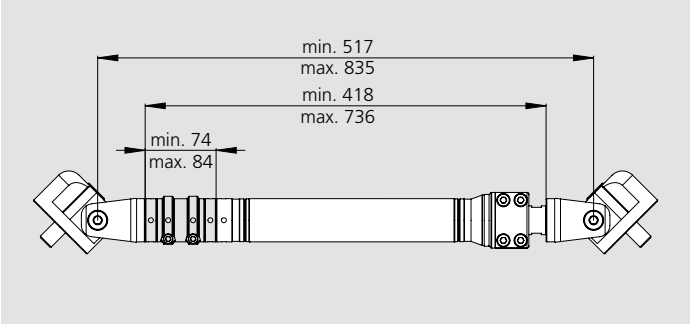

Id. No.	460336

Working examples

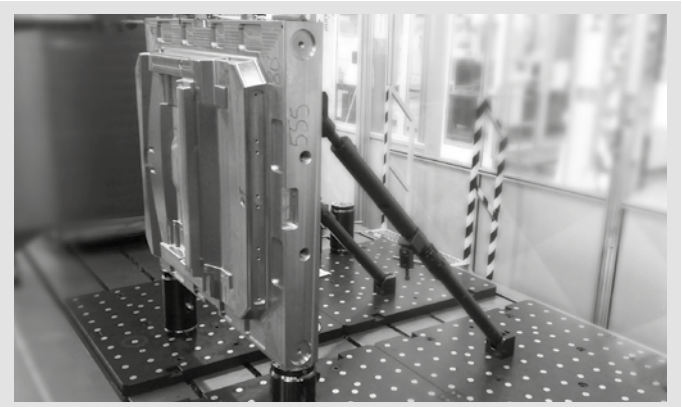

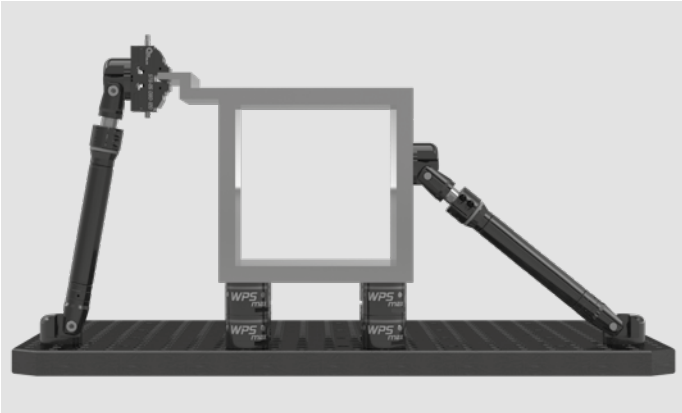

ADAPTER FOR THIRD POINT

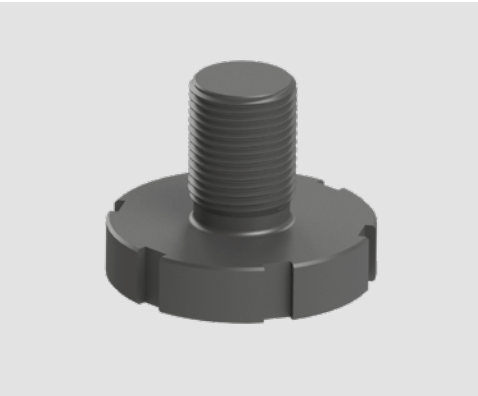

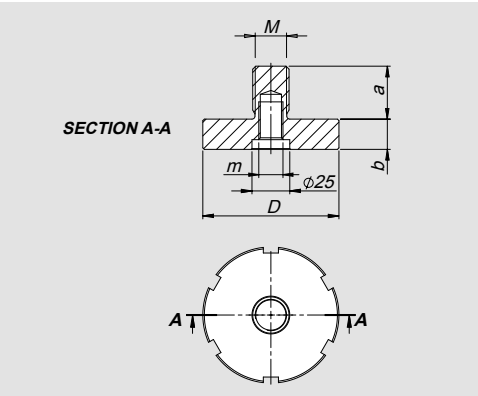

Id. No.	D	M	a	b	m
46232311	90	M24 x 3	35	20	M16
46232312	90	M30 x 3,5	40	20	M16
46232313	90	M36 x 3	50	20	M16
46232314	90	M36 x 4	50	20	M16
46232315	90	M 42 x 3	60	20	M16
46232316	90	M42 x 4,5	60	20	M16
46232317	90	M48 x 3	70	20	M16
46232318	90	M48 x 5	70	20	M16
46232319	90	M56 x 5	80	20	M16
46232320	90	M64 x 6	90	20	M16

Working examples

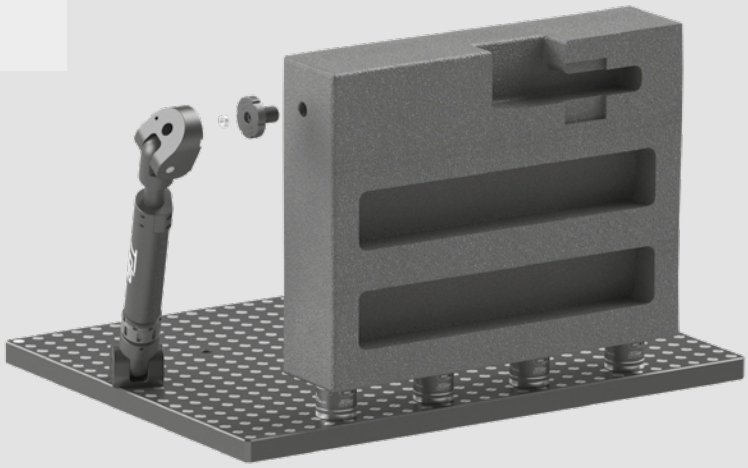

FIXING KIT FOR THIRD POINT FOR T-SLOTS

Code for T-slots				
	mm 18	mm 20	mm 22	mm 24
Id.No.	46232141	46232142	46232143	46232144

COLLECT CHUCK ER50

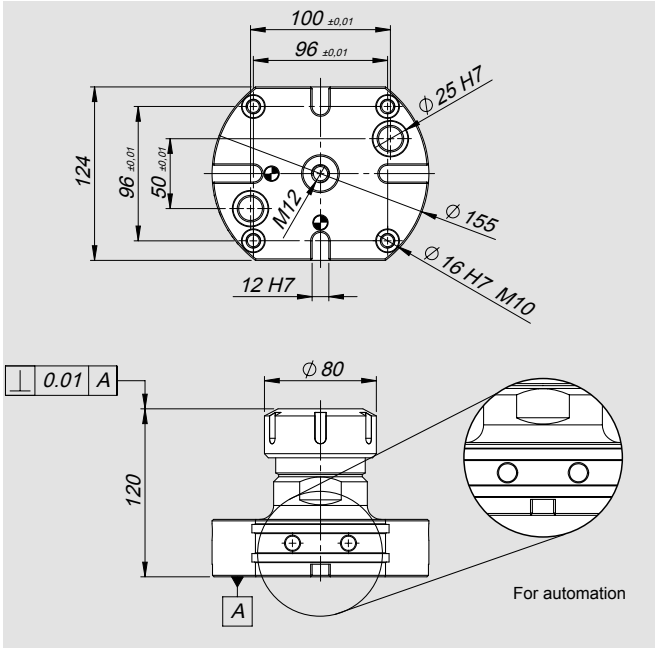

Id. No.
46233500

Working examples

MODULAR TOMBSTONE

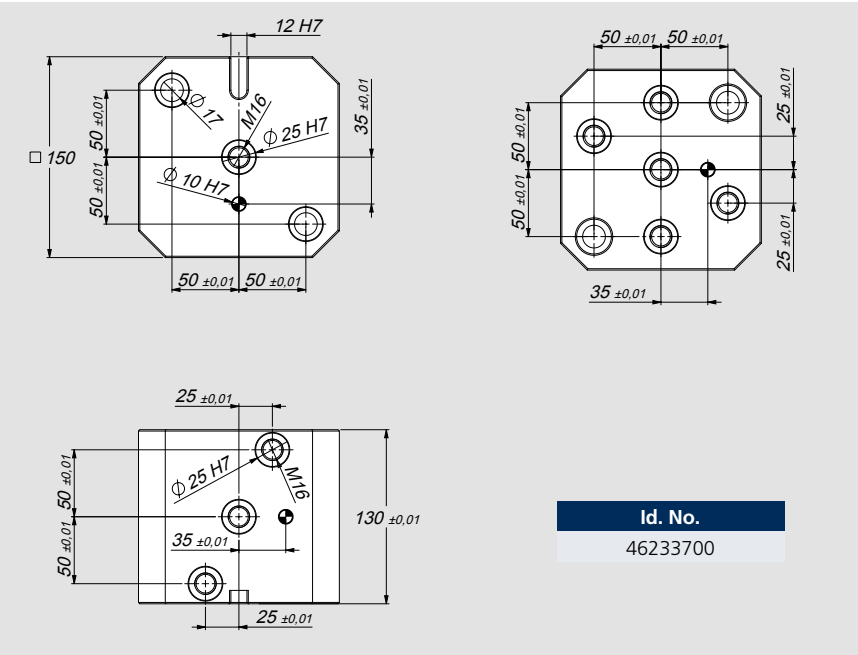

Id. No.
46233700

PAIR OF JAWS WITH CLAMPING SCREW TDM 88

Type	Id. No.
TDM 88 H40	46231001
TDM 88 H60-80-160	46231002

CLAMPING SCREW TDM 88

Type	Id. No.
TDM 88 H40	46230031
TDM 88 H60 - 80 - 160	46230032

Working examples

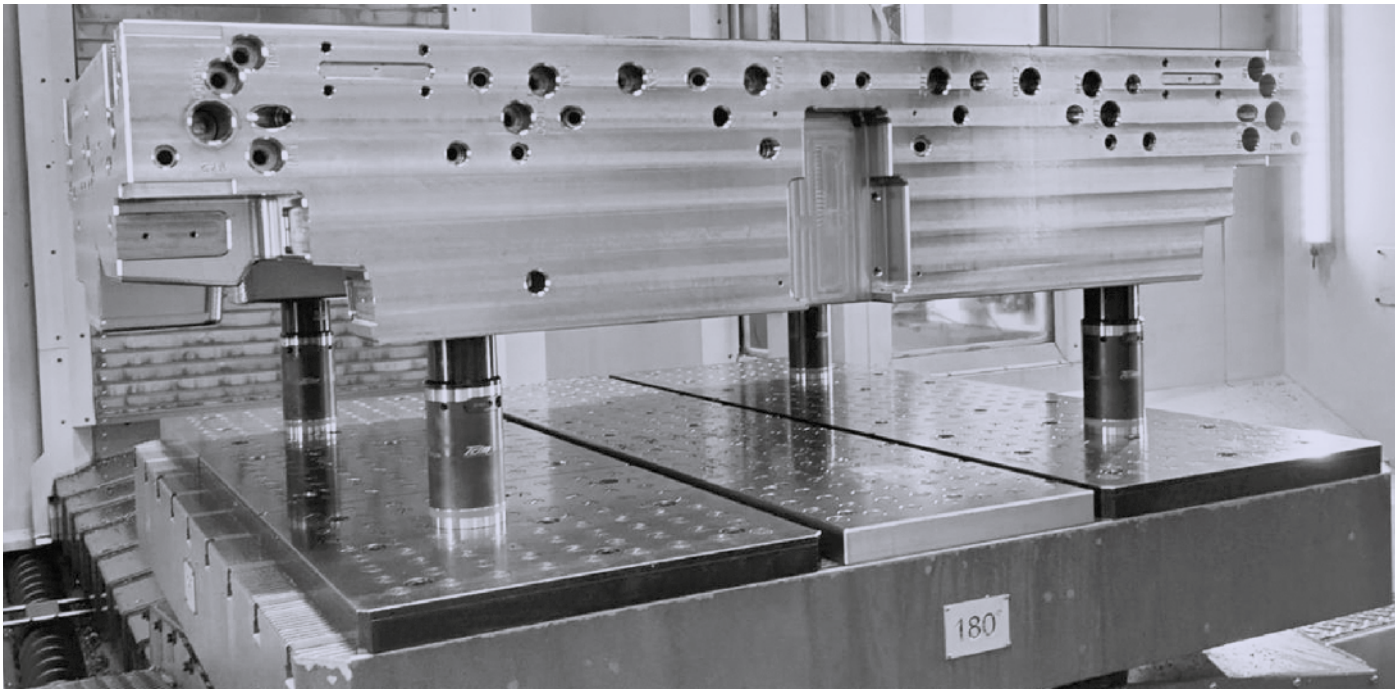

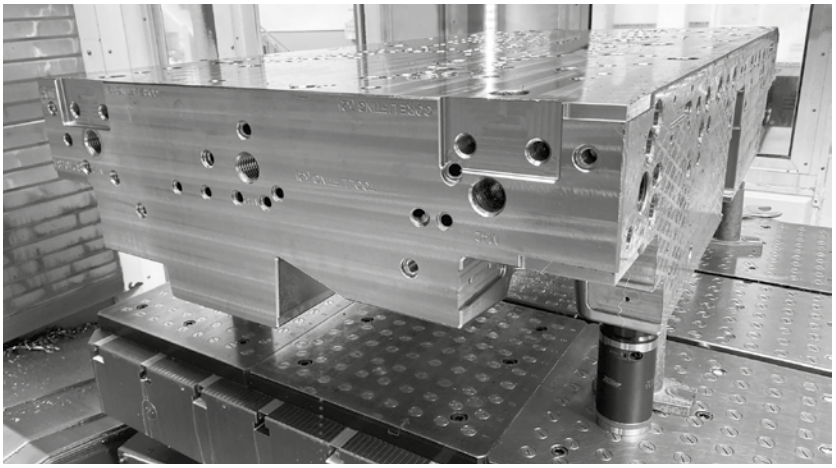

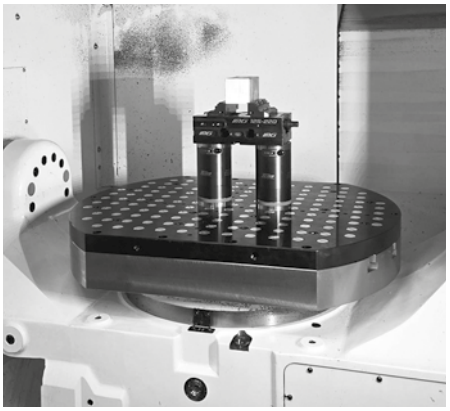

Tdm 48
TORQUE DIE & MOLD

Benefits

- **Only 3.5 rotation Lock-Unlock**
- **High jaws surface contact**
  (Pull down force 8 Kn at 12 Nm)

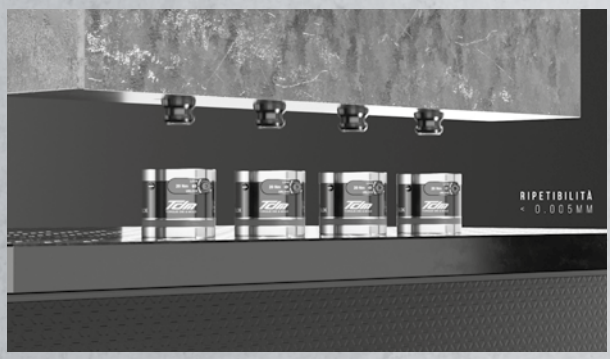

- **Repeatability <0,005 mm**
- **Holding force up to 50 Kn**

- **Self centered self compensating jaws**

Tdm 48

TORQUE DIE & MOLD

PATENT PENDING

TDM 48

Workpiece positioning system

Manual Zero Point Clamping System for the Workpiece Direct Clamping

Application/Benefits

- Huge reduction of set-up times for highest efficiency
- Safe workpiece clamping with maximum holding forces and highest repeatability
- Ideal for 5-axis machining
- Single quick-actuation for the rapid opening and closing of the modules with only 3.5 rotations
- Flexible configurations for customized use
- Interchangeable to the proven zero point system APS

Technical features

- Diameter 48 mm
- Pull down force 8 kN
- Max. torque 12 Nm
- Repeatability < 0.005 mm
- Holding force up to 50 Kn
- 2 clamping slides for maximum hold while clamping
- Complete of special screw cod. 46230004
- Fully sealed - low maintenance

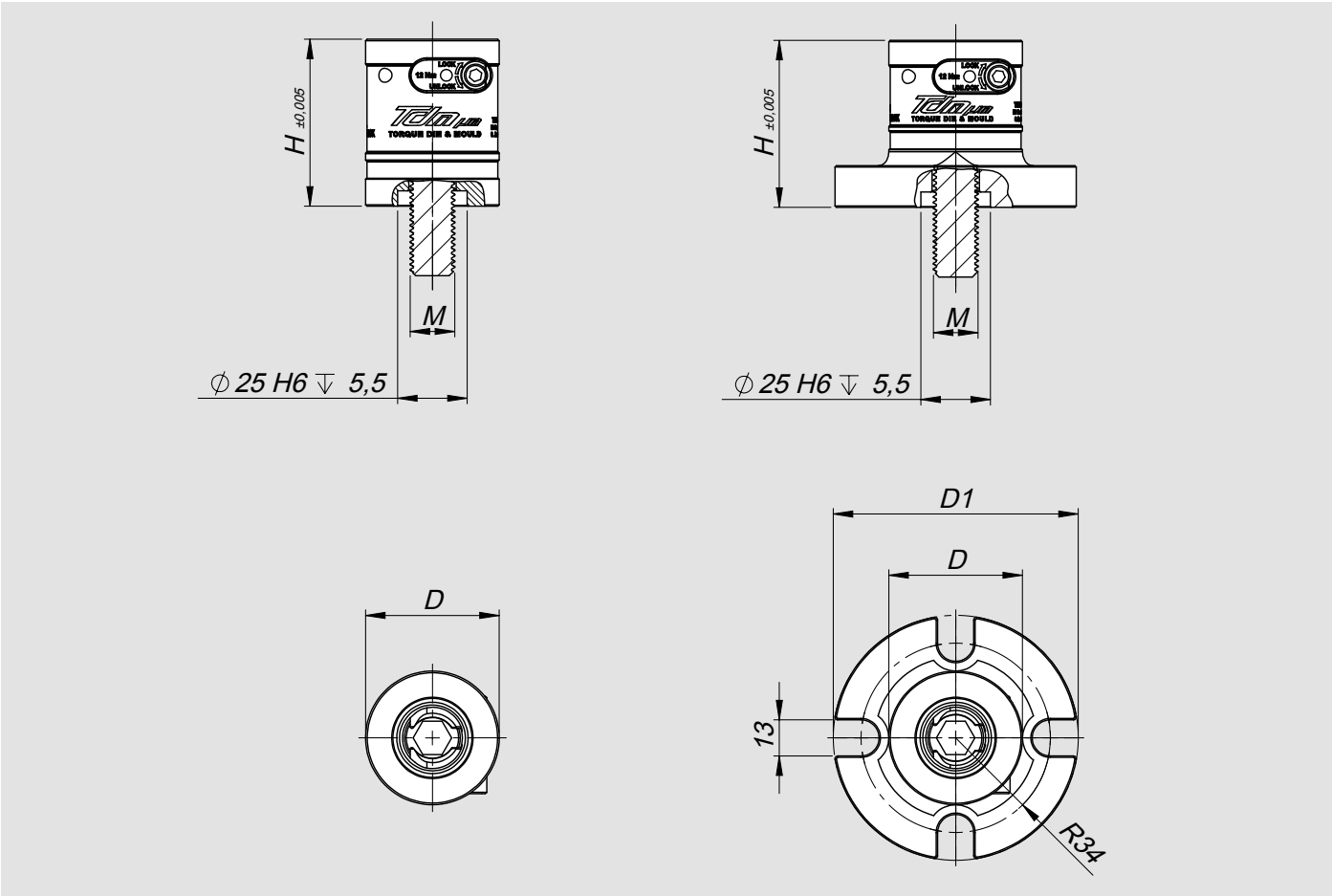

Module	Id. No.	D	D1	H	M
TDM 48	46230105	48	-	60	M16
TDM 48 flangiato 88/48	46230106	48	88	60	M16

TDM 48 Index

Workpiece positioning system

Application/Benefits

- Huge reduction of set-up times for highest efficiency
- Safe workpiece clamping with maximum holding forces and highest repeatability
- Ideal for 5-axis machining
- Single quick-actuation for the rapid opening and closing of the modules with only 3.5 rotations
- Flexible configurations for customized use
- Interchangeable to the proven zero point system APS

Technical features

- Diameter 48 mm
- Pull down force 8 kN
- Max. torque 12 Nm
- Repeatability < 0.005 mm
- Holding force up to 50 Kn
- 2 clamping slides for maximum hold while clamping
- Complete of special screw cod. 46230004
- Fully sealed - low maintenance

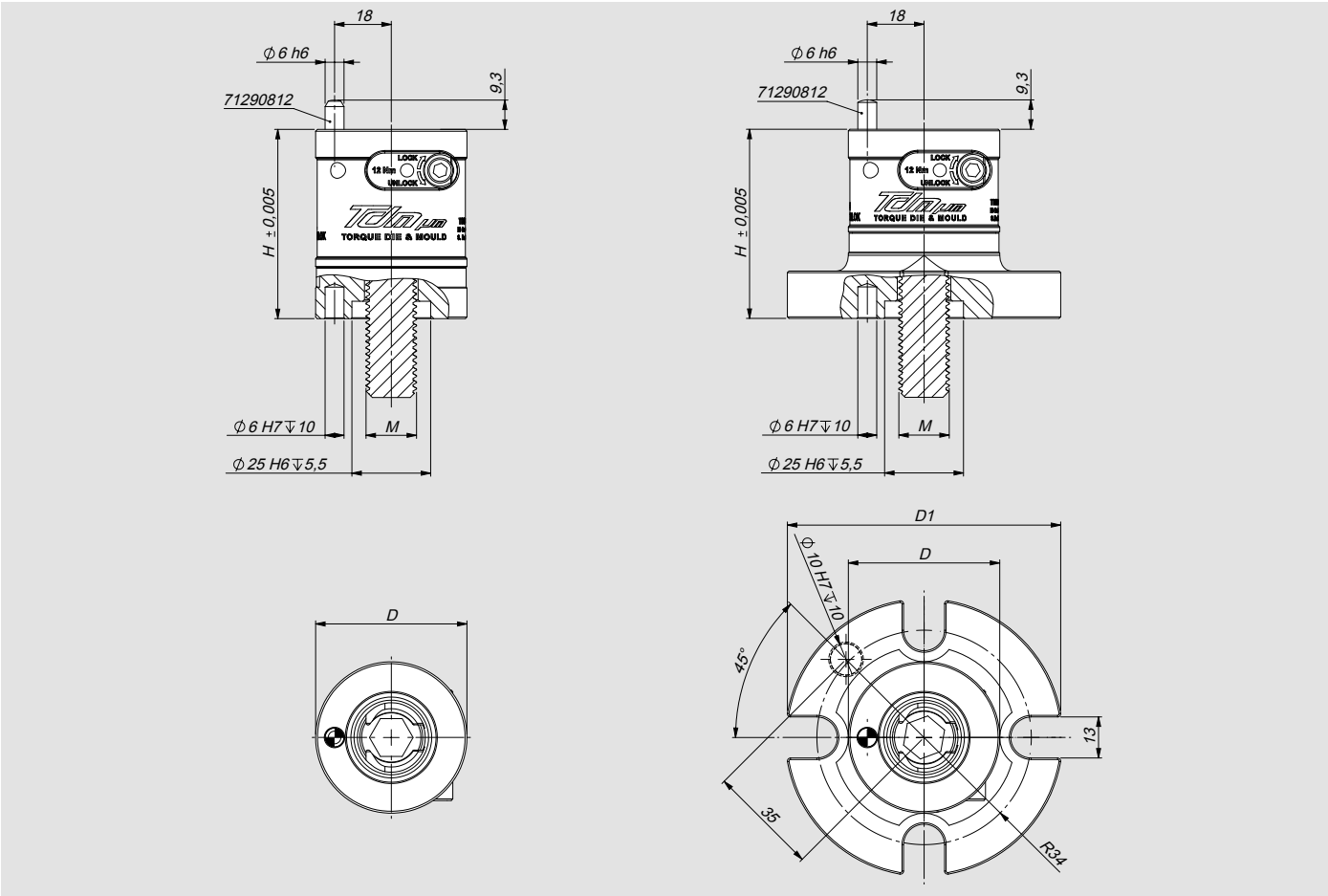

Module	Id. No.	D	D1	H	M
TDM 48 index	46230115	48	-	60	M16
TDM 48 index flangiato 88/48	46230116	48	88	60	M16

Pins for TDM Ø48 complete with grub screw UNI 5932

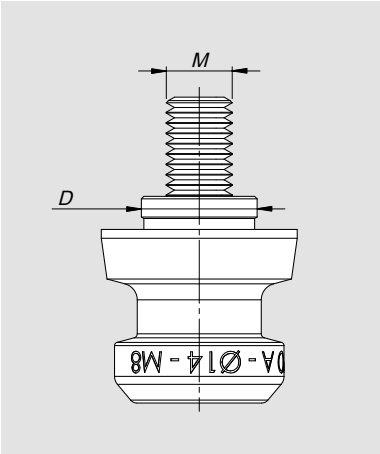

Id. No.	D	M - UNI 5932	Type
46231531	10 h4	M6	**A**
46231532	11 h4	M6	**A**
46231541	12 h4	M8	**A**
46231542	14 h4	M8	**A**
46231551	14 h4	M10	**A**
46231552	16 h4	M10	**A**
46231731	10 h4	M6	**C**
46231732	11 h4	M6	**C**
46231741	12 h4	M8	**C**
46231742	14 h4	M8	**C**
46231751	14 h4	M10	**C**
46231752	16 h4	M10	**C**

Pins for TDM Ø48 without centering complete with grub screw UNI 5932

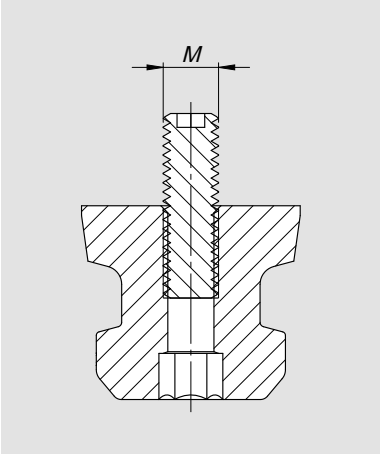

Id. No.	M - UNI 5932
46231533	M6
46231543	M8
46231553	M10

Special M16 clamping screw on grid plate

Id. No.
46230004

Working examples

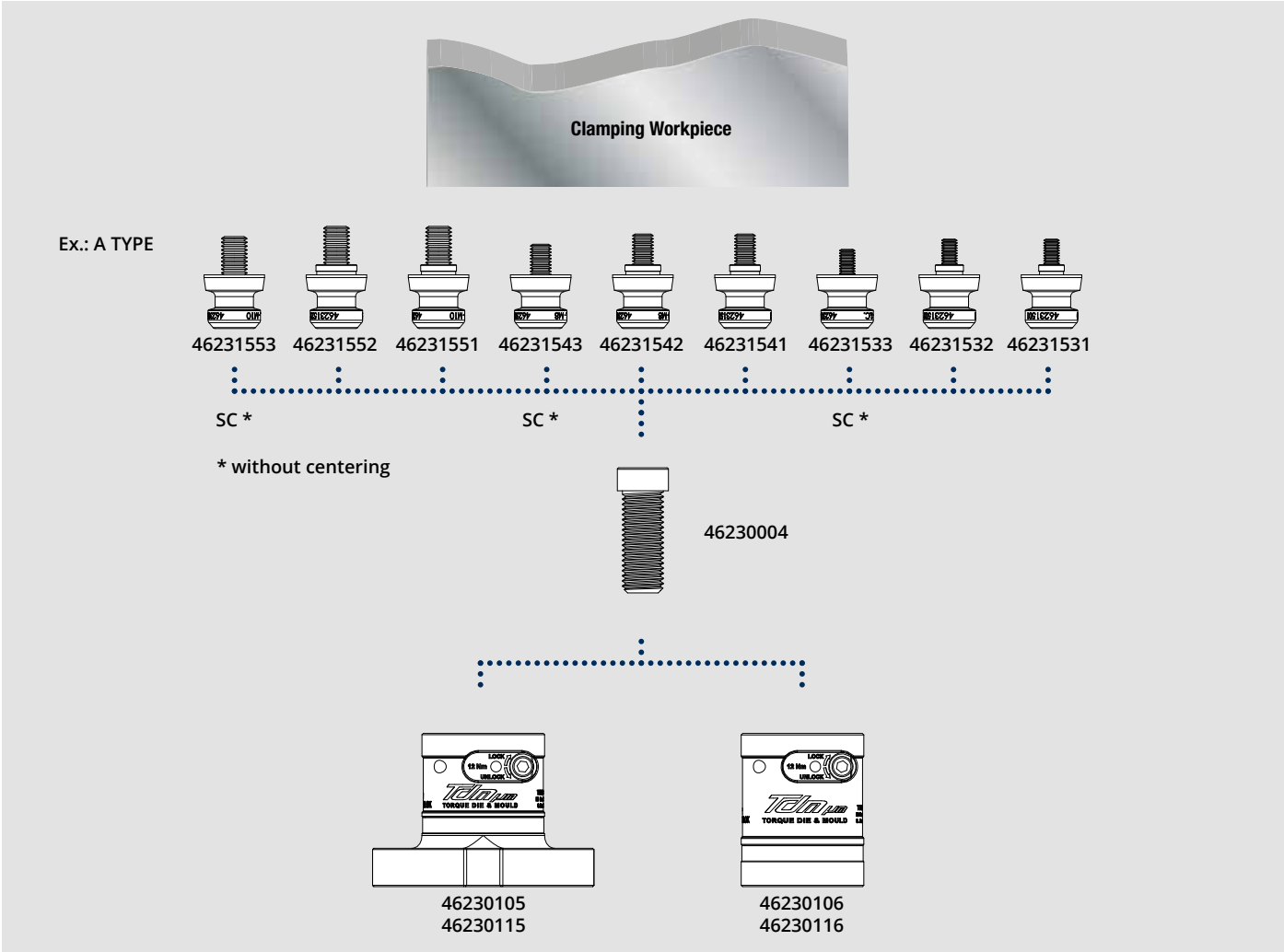

PAIR OF JAWS WITH CLAMPING SCREW TDM 48

Type	Id. No.
TDM 48	46231003

CLAMPING SCREW TDM 48

Type	Id. No.
TDM 48	46230033

REDUCTION BUSH for M12 / M10

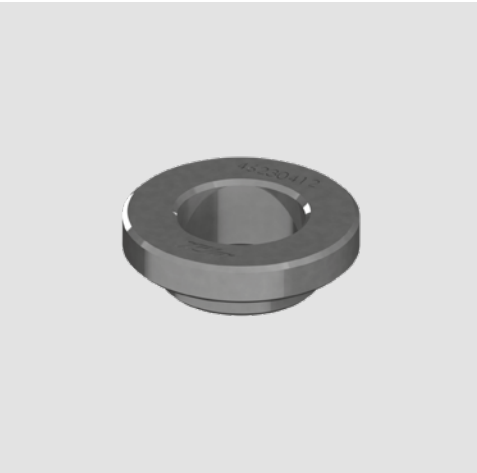

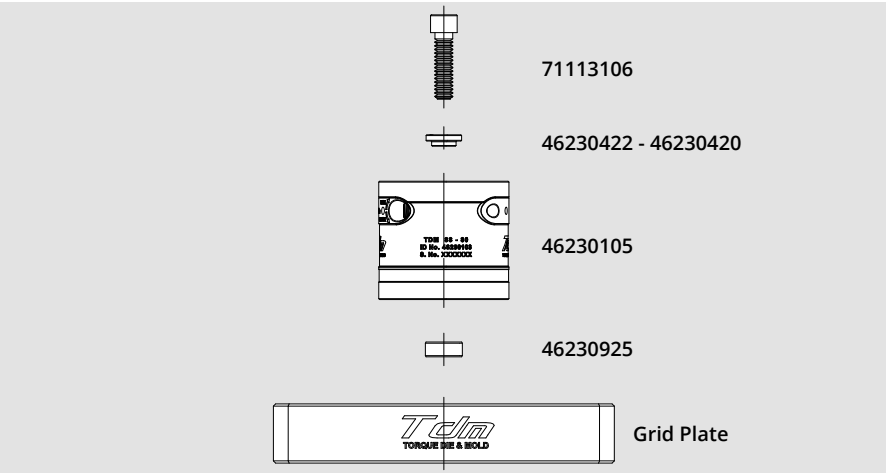

18- Reduction Mounting	M12			M10		
	Id. No. disk	Id. No. screw	screw length	Id. No. disk	Id. No. screw	screw length
TDM Ø48 H60	46230422	71113106	40	46230420	71113085	35

CENTERING BUSH

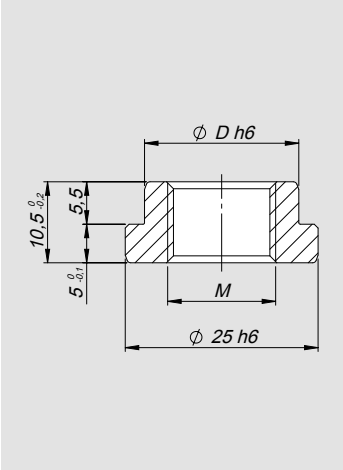

Id. No.	D	Thread for extraction * M
46230918	18	M14 x 1,5
46230920	20	M14 x 1,5
46230922	22	M18 x 1.5
46230924	24	M18 x 1.5
46230925	25	M18 x 1.5

* Extractor page 0.2.44

SPACER for TDM Ø48

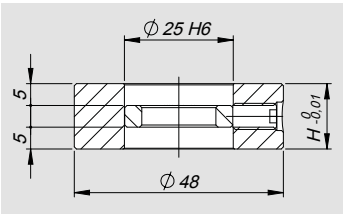

Id. No.	H
46232710	10
46232715	15
46232720	20
46232725	25
46232730	30
46232740	40
46232750	50

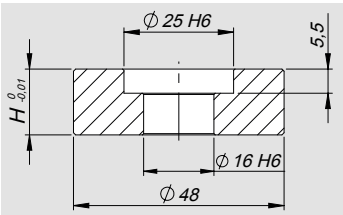

Id. No.	H
46232810	10
46232815	15
46232820	20
46232825	25
46232830	30
46232840	40
46232850	50

INTERFACE FLANGE for TDM 48/48

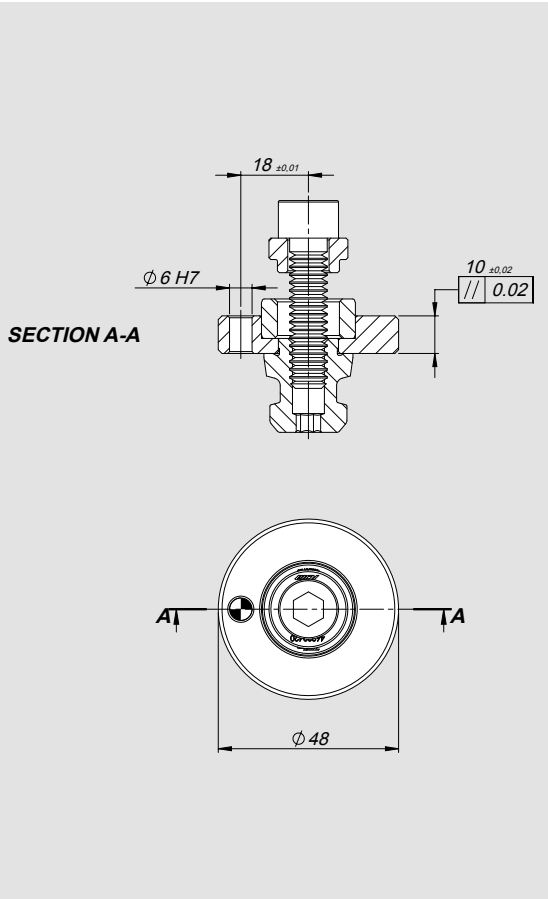

Id. No.
46234050

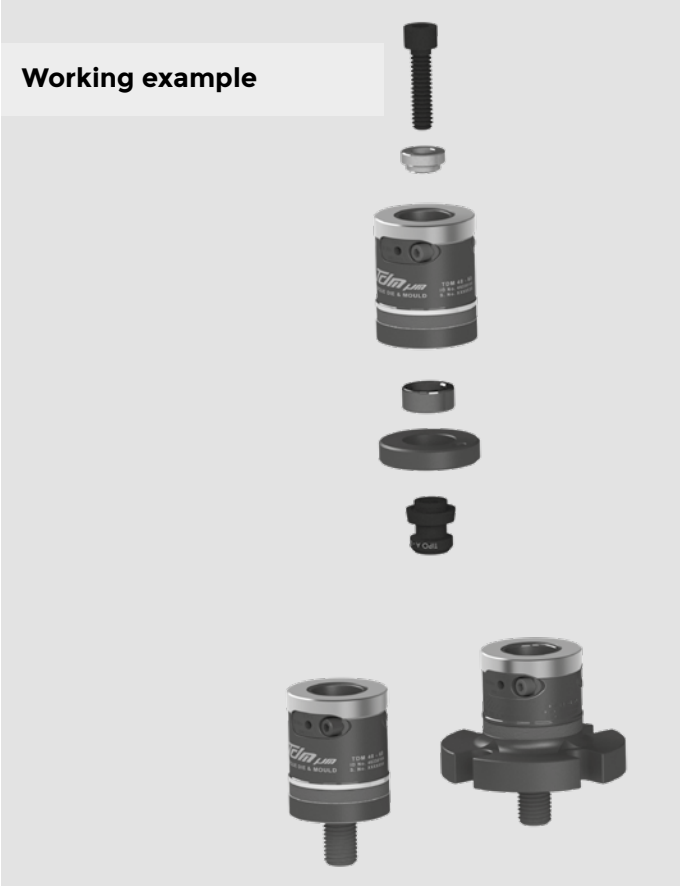

TdmMag

TORQUE DIE & MOLD

Magnetic system for clamping pieces in milling

Benefits

The **TDM MAG** system utilizes **MILLTEC AUTOBLOK MAG** technology in combination with the **TDM** system.

The clamping of the workpiece is carried out by means of the permanent electromagnetic system while the piece is centered through the **TDM MAG**.

A series of calibrated holes are made on the magnetic chuck with hardened bushes pitch 100mm ±0.01mm to which the **TDM MAG** elements are fixed.

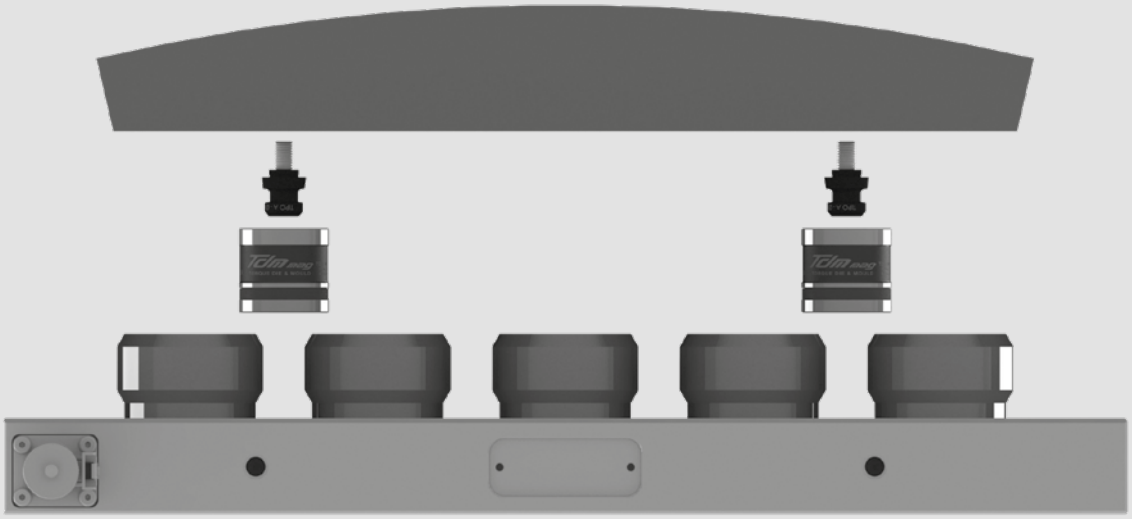

Location.

With **TDM MAG** the problem of the workpiece's location is solved and with **TDM** the possibility of workpiece sliding is eliminated during the machining.

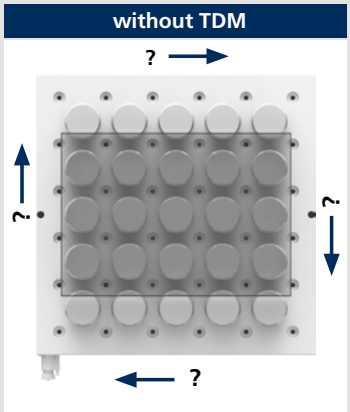

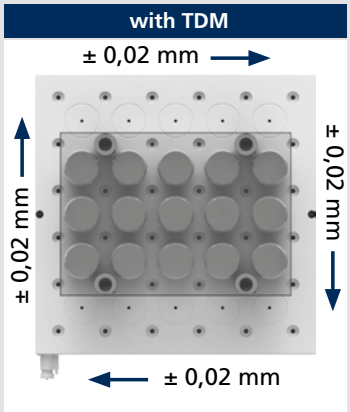

Magnetic system for clamping pieces in milling

Benefits

Repeatability.

With **TDM MAG** the positioning repeatability of the workpiece is guaranteed ±0,01mm.

Precision.

The magnetic plates of the **TDM MAG** series are finely ground within the indicated parallelism tolerance

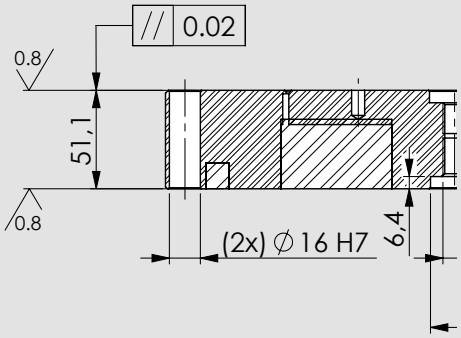

Roughness of the piece.

The magnetic clamping force of a workpiece is proportional to the contact surface and to the square of its magnetic flux density.
Consequently, to ensure a better clamping force, it is recommended to cover the largest number of North and South magnetic poles and above all to improve the quality of contact with the piece as much as possible through the use of suitable pole extensions and the choice of the correct magnetic generator.
Having carried out the first preparation phase of the piece (see point 2 of the cycle), **the best magnetic performance condition is consequently obtained**.

Factors Affecting Density of magnetic flux	Indicative values of performance reduction and application considerations
Roughness of the piece	▪ 100% = rectified ▪ **90 ÷ 80% = fine milled (TDM MAG)** ▪ 80 ÷ 70% = milled ▪ 70 ÷ 60% = raw
Type of material	▪ 100% mild steel ▪ 70% ÷ 80% alloy steel ▪ 40% cast iron ▪ 0% non-magnetic stainless steel, brass, aluminum
Thickness of work-piece	The clamping of pieces with a thickness less than the minimum recommendation reduces the level of magnetic performance
Correct set up of the work-piece on the magnetic surface	It is preferable to place the piece partially covering more magnetic poles rather than a smaller number of magnetic poles with full coverage

TdmMag

TORQUE DIE & MOLD

Magnetic system for clamping pieces in milling

Benefits

Zero Point

TDM MAG can be applied directly or via an interface plate (only for 400x400) to the **APS Zero Point system.**

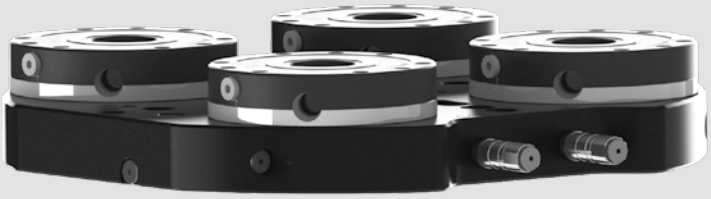

Non-magnetizable pieces

With **TDM MAG**, by replacing the centering modules (Id.No. 46233610) with the TDM 48 or 88 clamping modules, **NON-MAGNETIZABLE** pieces can be clamped with a considerable saving of set-up time.

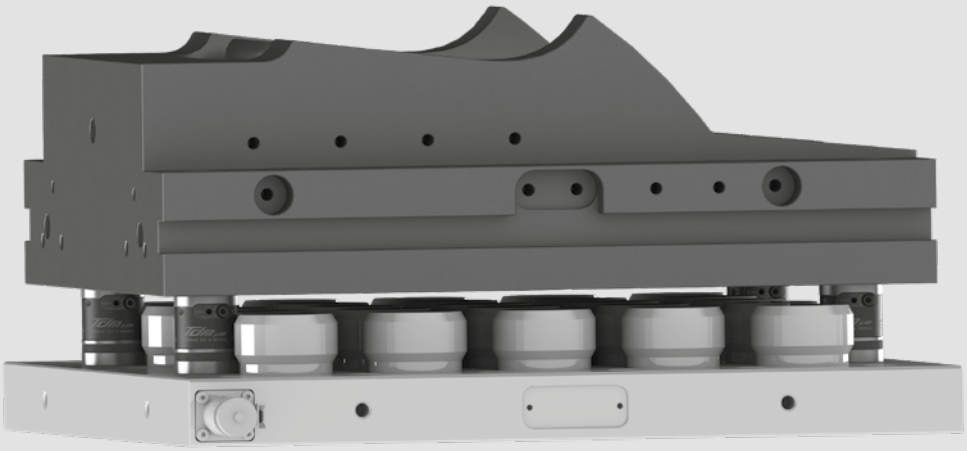

Polar extensions and automatic shimming

The use of polar extensions suitable for the application reduces the operating air gaps and improves the magnetic flux density. They can be used to elevate the piece and machine the 5 faces in a single placement, for contouring, chamfering, through drilling operations or to create mechanical, magnetic stops and dedicated jigs.
It is possible to carry out the automatic shimming of deformed pieces through the use of mobile extensions that avoid the tensioning of the piece during the work phase.

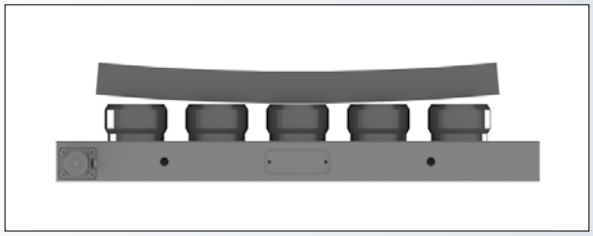

OP 1

Place the workpiece on 3 3 TDM centering elements (Id.No. 46233610) placed at the end to determine the work surface with the support of all the other mobile extensions.

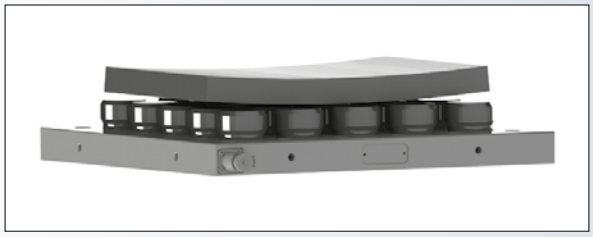

OP 2

By starting a magnetization cycle on the permanent-electro magnetic chuck, you will notice that the mobile pole extensions will adapt to the profile of the workpiece. At this point, start the first machining on the upper surface and drill the holes for the **TDM** pins (see page 38).

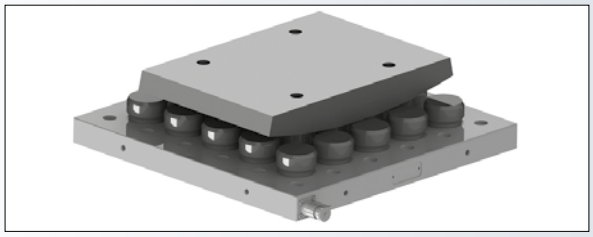

OP 3

Once the first machining is finished, start a Demagnetization cycle.

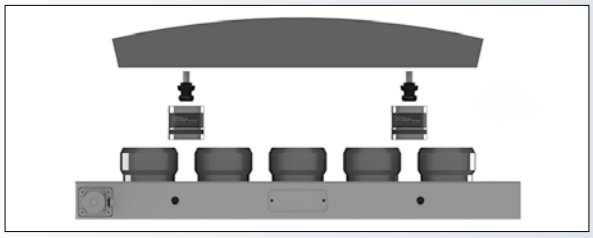

OP 4

Turn the workpiece upside down with the machined face on the bed of pole extensions. Start the magnetization cycle for the second machining operation.

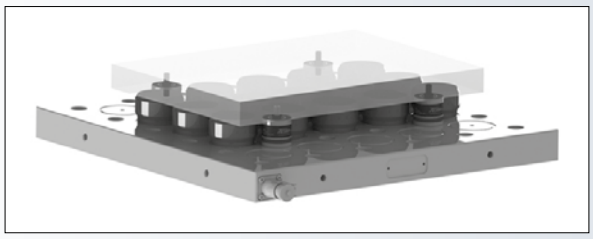

OP 5

At the end of the second machining it is possible to proceed with a demagnetization cycle, then remove the perfectly planar machined piece with the two parallel faces.

TdmMag

TORQUE DIE & MOLD

Magnetic system for clamping pieces in milling

BREVETTATO
PATENTED
BREVETTÉ - PATENTIERT

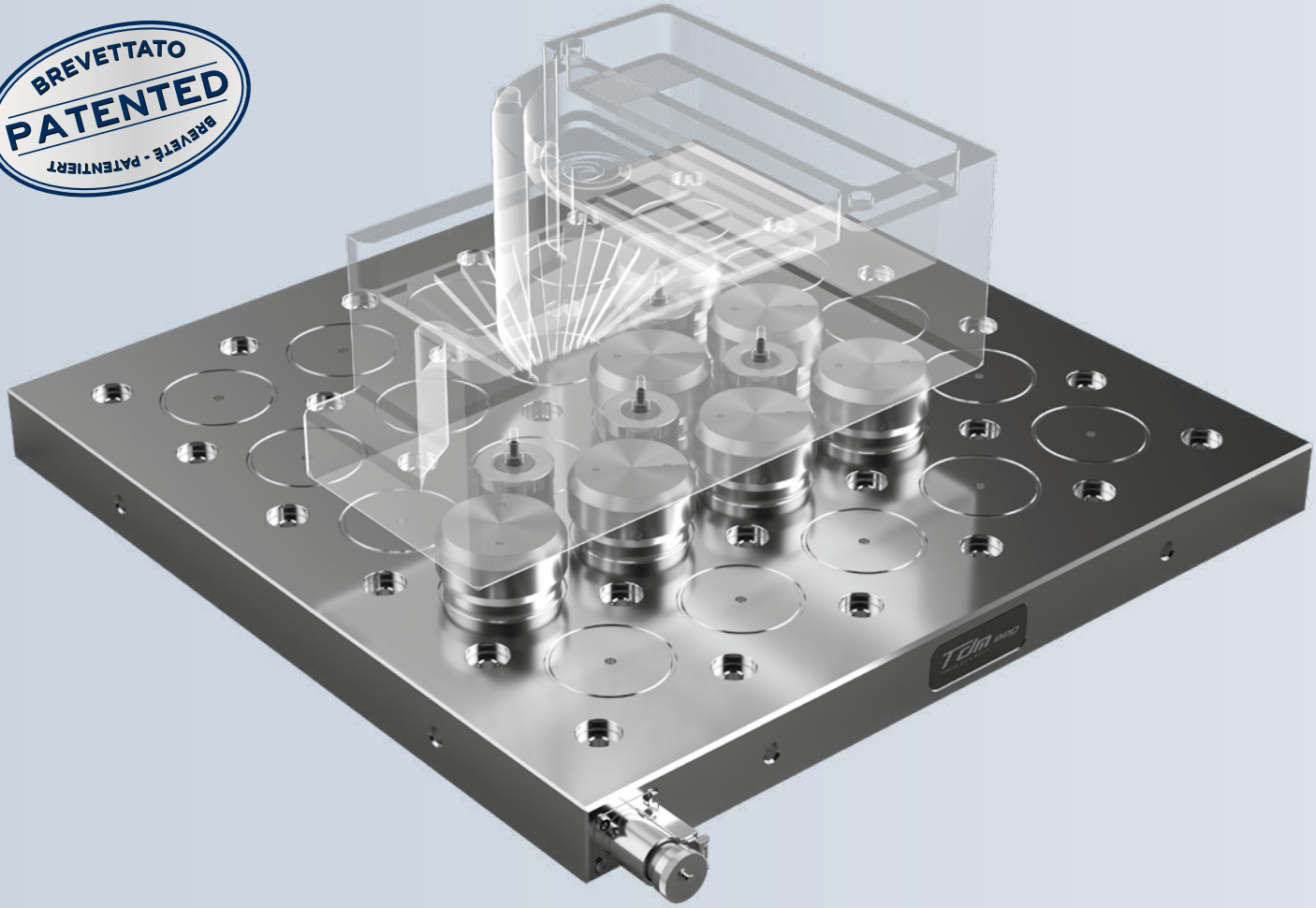

TDM system integrated with the technology of the subsidiary MAG AUTOBLOK

MillTEC is a MAG AUTOBLOK TECNOMAGNETE patent and represents the state of the art in the technological and constructive evolution of electro-permanent magnetic chucks for machining centers and milling machines.

The frame is designed as a monolithic honeycomb structure and manufactured “from solid” with the same technology used for precision molds.

The entire surface can be machined for the insertion of precision bushings, dowel pins or mechanical and magnetic stops to be used as a reference or to enhance the clamping force.

All of the magnetic and electrical components are inserted inside the frame in a special housing becoming an integral and solid part of the system.

The magnetic poles are the result of a series of coring machining carried out from the lower side of the mono-block steel frame and highlighted on the upper working side by light circular engravings.

The working surface is totally metallic without any presence of epoxy resin, brass or aluminum inserts.

TdmMag

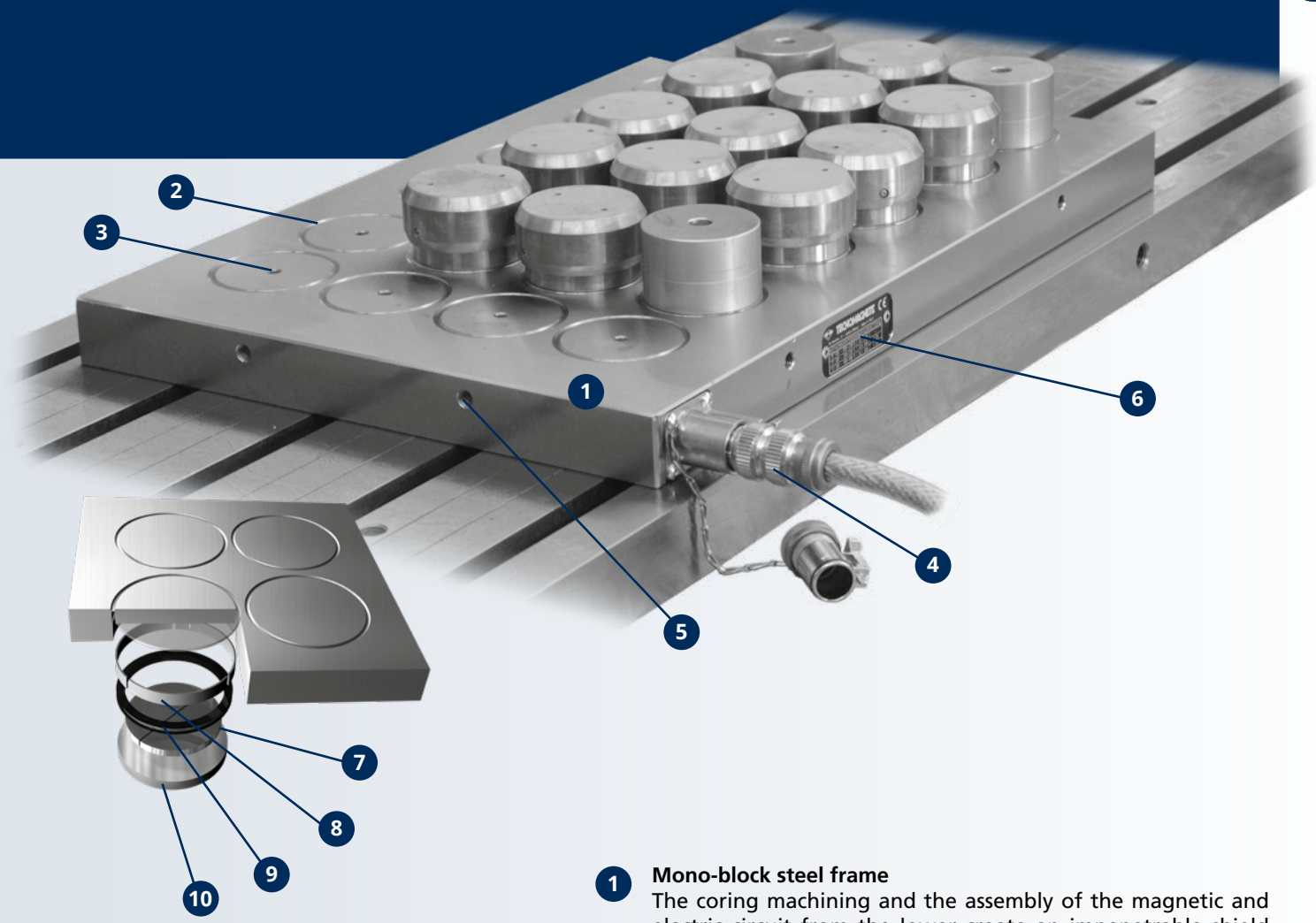

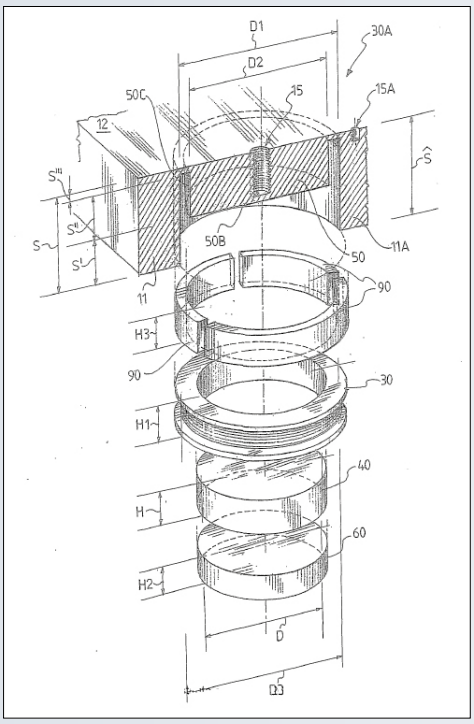

International patent **WO 2009/130721**

1. **Mono-block steel frame**
   The coring machining and the assembly of the magnetic and electric circuit from the lower create an impenetrable shield from any external agent.
2. **Light circular engravings**
   To highlight the position of the magnetic polarity while maintaining a totally solid and metal surface without resin, brass or aluminum inserts.
3. **M8 threaded holes**
   For the use of fixed / mobile extensions or special accessories tailored to the applicatio
4. **Quick fit connector**
   Precise, safe and watertight for quick connection with the control unit.
5. **M10 threaded holes**
   To use with mechanical stops for reference.
6. **Performance plate with technical data**
   Data on voltage, current absorption, serial number.
7. **Reversible permanent magnet AlNiCo**
8. **Static permanent magnet Neodymium**
9. **Encapsulated electric coil**
10. **Hermetic closing cap**

TDM MAG

Magnetic system for clamping pieces in milling

MAGNETIC PLATE

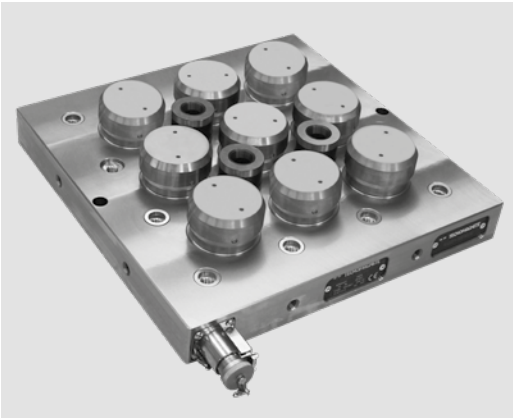

Complete with:

- Magnetic plane
- n. 9 moving extensions
- n. 3 TDM MAG (46233610)
- ST200FA control unit
- Cable

(Pins not included)

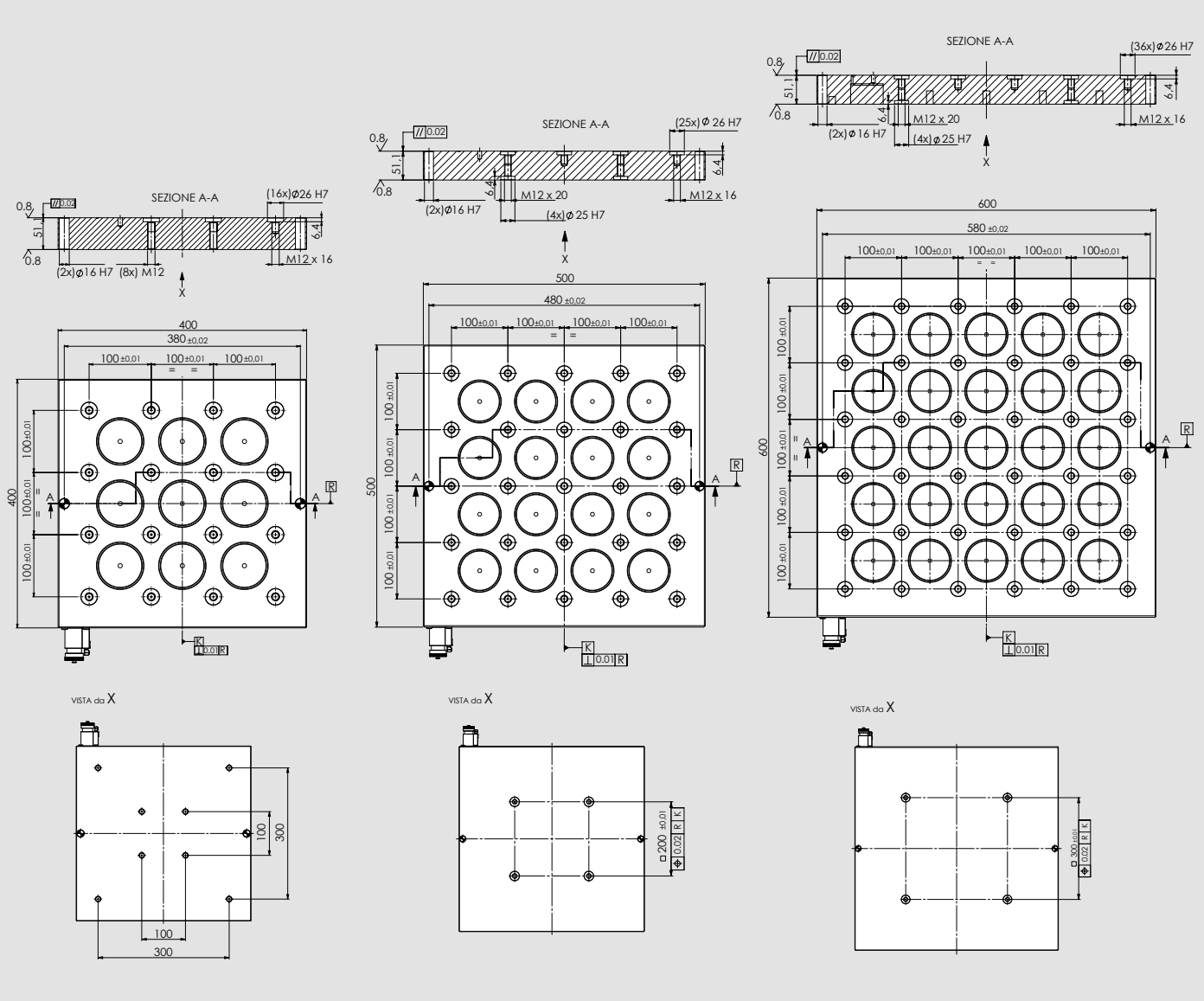

Id. No.	Dimensions	Weight	Poles	Min. thicks	Force/pole	Force
	mm	Kg	n.	mm	daN	Tons
46233640 *	400 x 400 x 51	90	9	17	615	5,8
46233650	500 x 500 x 51	120	16	17	615	10
46233660	600 x 600 x 51	155	25	17	615	16

***** Integration for Zero Point pins with interface plate

On request: magnetic plates of different dimensions

TDM MAG 48 - Centering module with screw

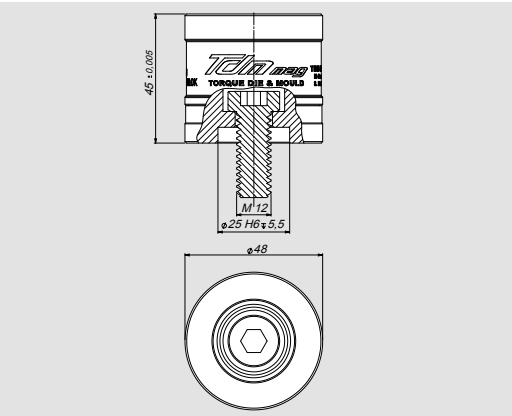

Id. No.
46233610

TDM 48 - For clamping non-magnetizable pieces

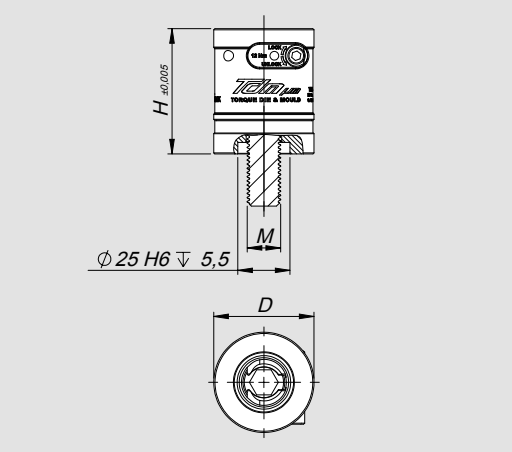

See page 0.2.26
for technical features

Module	Id. No.	D	H	M
TDM 48	46230105	48	60	M12 *

* see page 0.2.**28**

TDM 88 - For clamping non-magnetizable pieces

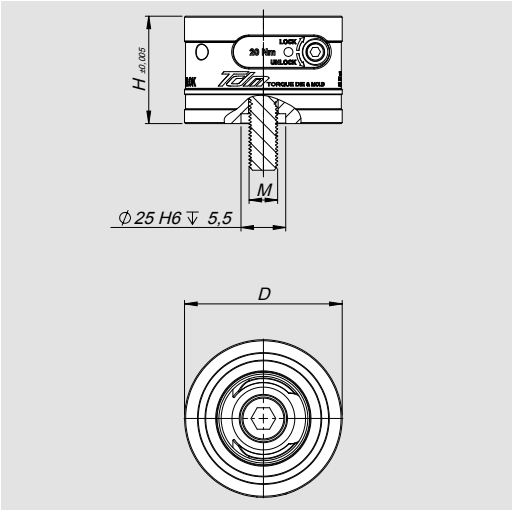

See page 0.2.6
for technical features

Module	Id. No.	D	H	M **
TDM88 H60	46230102	88	60	M12 *
TDM88 H80	46230103	88	80	M12 *
TDM88 H160	46230104	88	160	M12 *

****** Complete with screw 12.9

***** see page 0.2.**14**

Pins for TDM Ø48 complete with grub screw UNI 5932

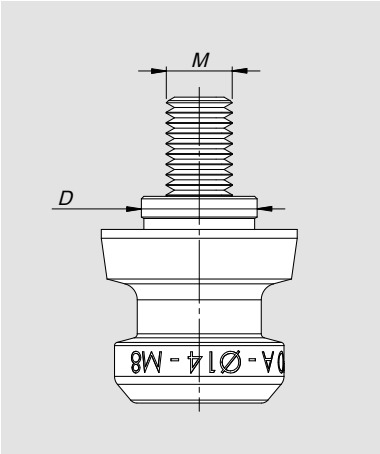

Id. No.	D	M - UNI 5932	Type
46231531	10 h4	M6	**A**
46231532	11 h4	M6	**A**
46231541	12 h4	M8	**A**
46231542	14 h4	M8	**A**
46231551	14 h4	M10	**A**
46231552	16 h4	M10	**A**
46231731	10 h4	M6	**C**
46231732	11 h4	M6	**C**
46231741	12 h4	M8	**C**
46231742	14 h4	M8	**C**
46231751	14 h4	M10	**C**
46231752	16 h4	M10	**C**

Pins for TDM Ø48 without centering complete with grub screw UNI 5932

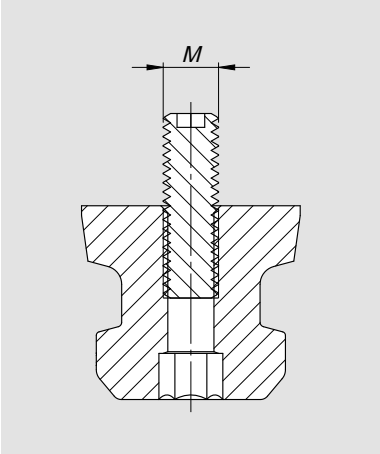

Id. No.	M - UNI 5932
46231533	M6
46231543	M8
46231553	M10

APS interface plate for magnetic plate 400x400

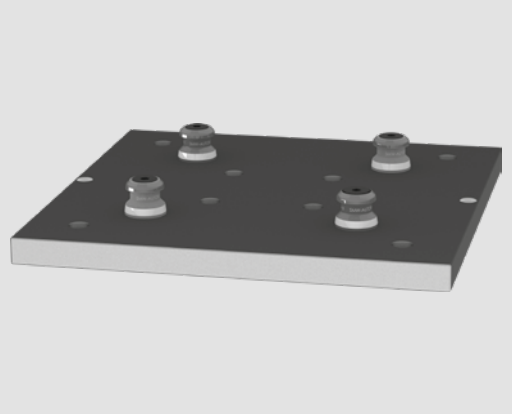

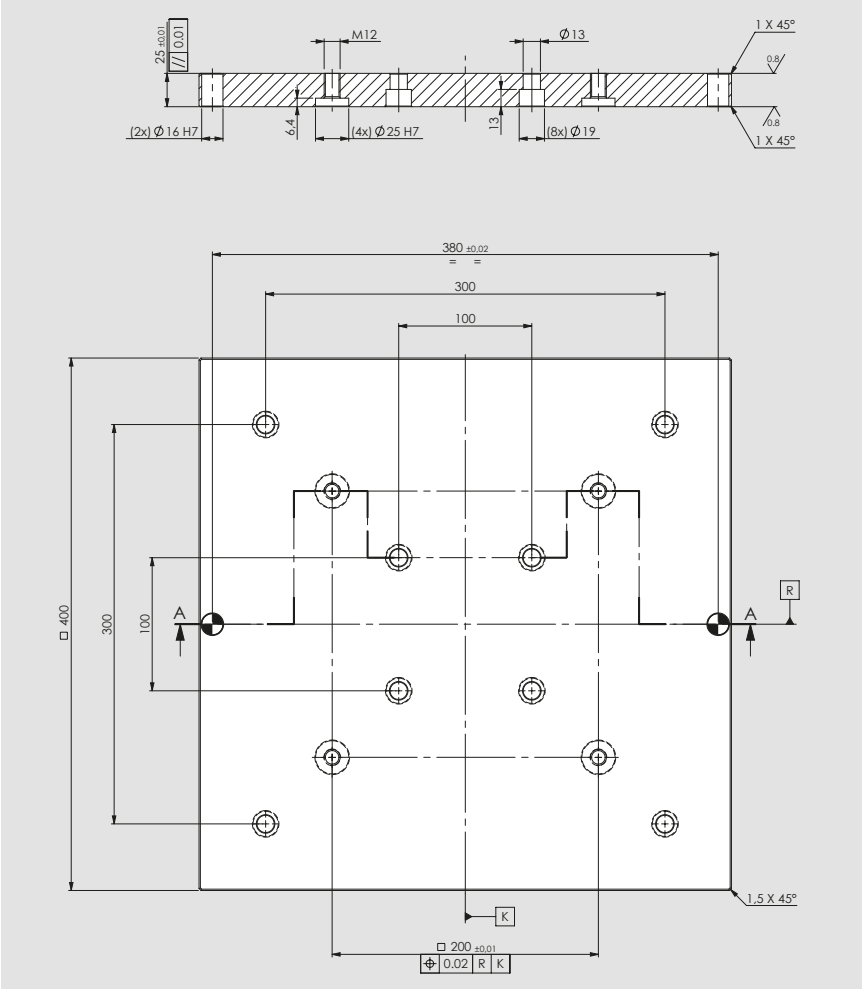

Integration interface plate for Zero Point pins complete with n. 1 pin A, n. 1 pin B, n. 2 pins C M12 for APS

Id. No.
46233645

Working example

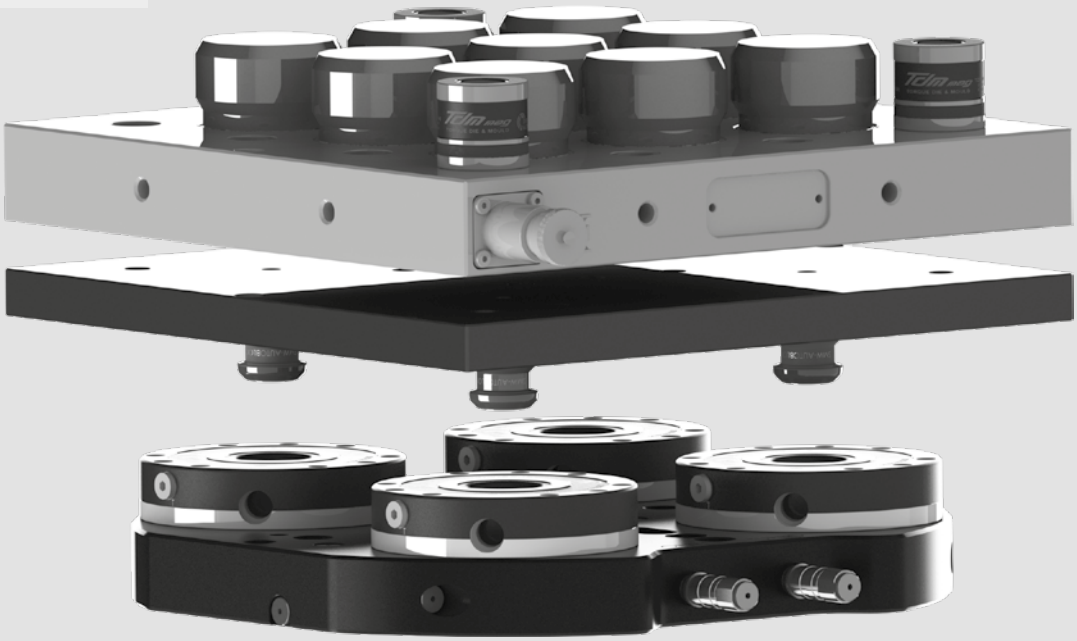

TDM MAG

Magnetic system for clamping pieces in milling

CENTERING BUSH

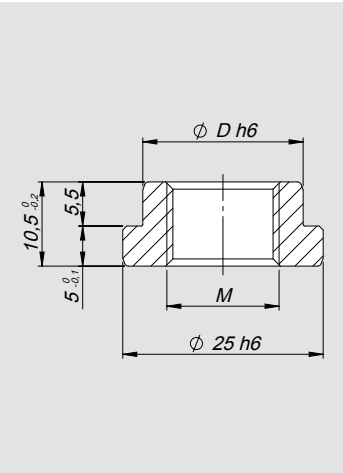

Id. No.	D	M
46230918	18	M14 x 1,5

CONTROL UNITS ST200FA

The ST200FA series is characterized by compactness and lightness.
Designed to be positioned vertically on the machine cabinet, it is supplied pre-arranged with a rear hooking system.
ST200FA has an integrated push button with high intensity LEDs and is available with voltages from 360V to 480V.

EXTENSION

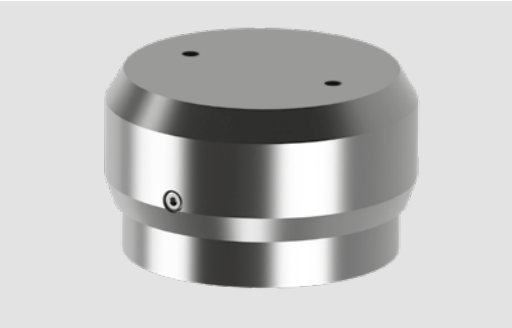

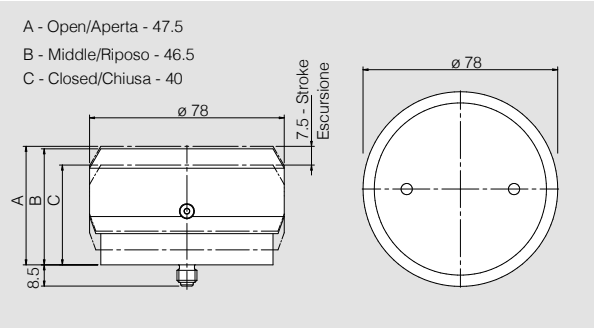

Id. No.
APRMP7045

FIX EXTENSION

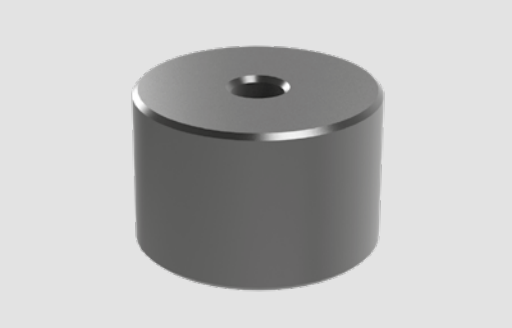

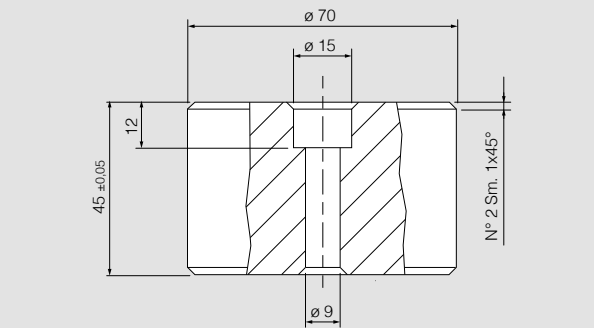

Id. No.
PFR70-45

CRANKWEBS

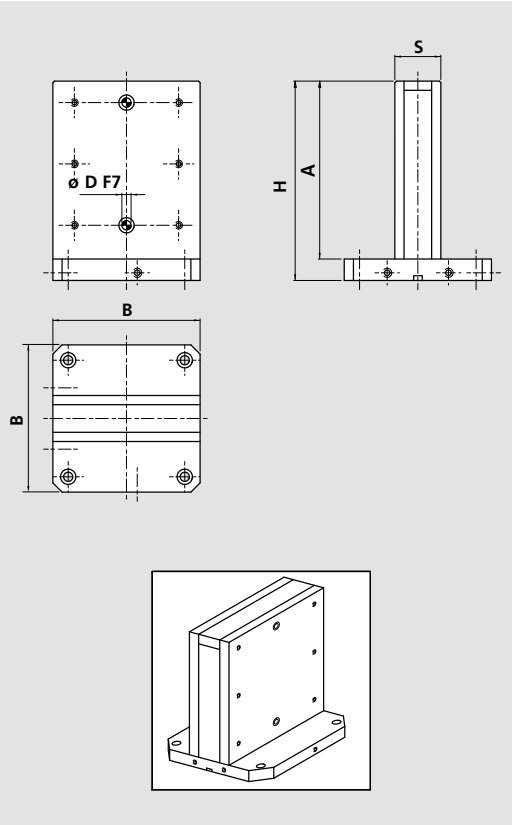

Working example

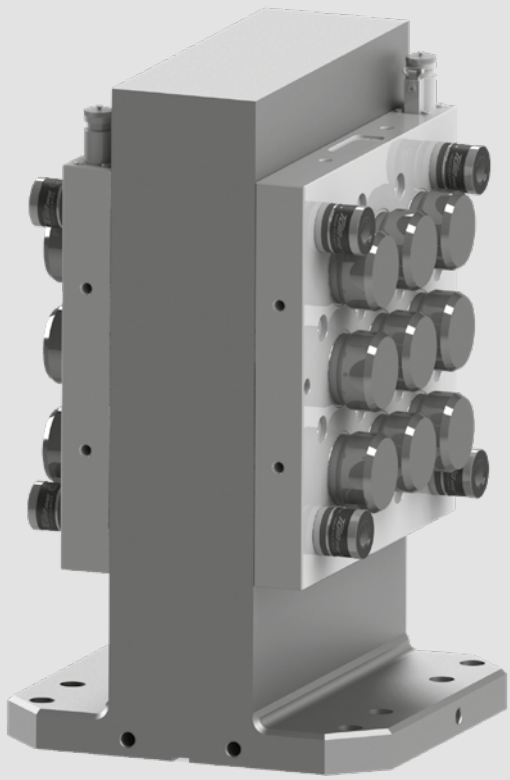

Note: Thanks to the cast aluminum alloy version, the total weight of the system complies with the maximum weight that can be supported by horizontal machine tools

Id.No.	A	B	H	Ø D	S	Weight
	mm	mm	mm	mm	mm	Kg
57328035	620	400	660	16	150	77
57328055	660	500	700	16	150	103

Special sizes on request.

ROUNDED PLATES

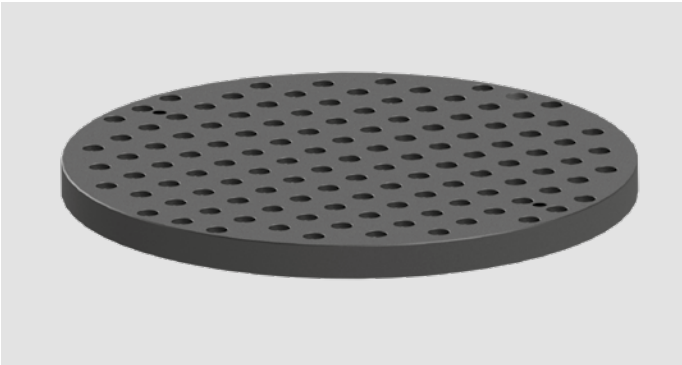

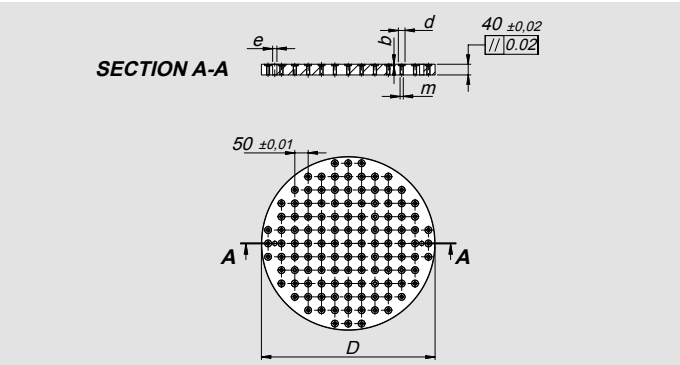

Id. No.	D	d	m	b	e	No. holes
46234122	Ø500	25 H7	M16	6,40	16H7	69
46234123	Ø650	25 H7	M16	6,40	16H7	121
46234124	Ø800	25 H7	M16	6,40	16H7	185

STANDARD PLATES WITH GRID

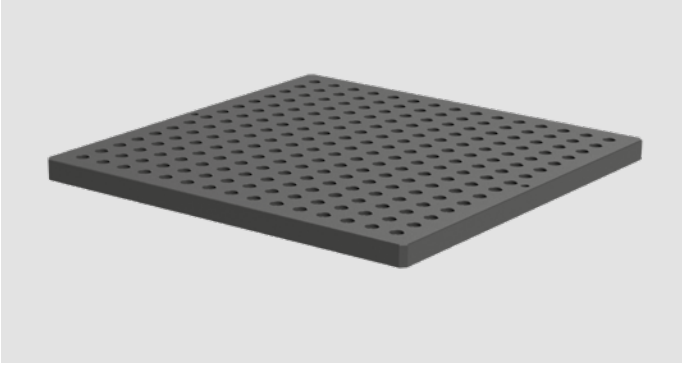

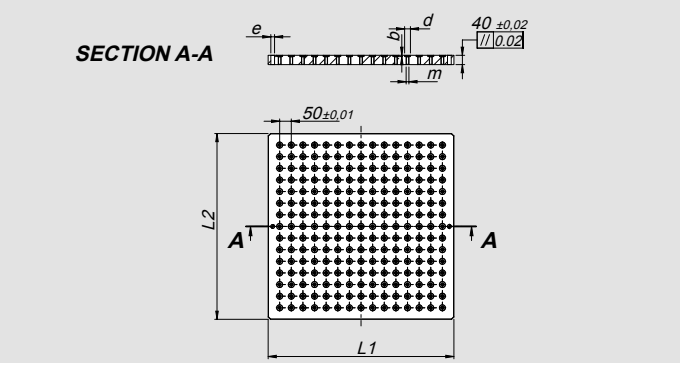

Id. No.	L1	L2	d	m	b	e	No. holes
46234102	499	499	25 H7	M16	6,40	16H7	81
46234103	599	599	25 H7	M16	6,40	16H7	121
46234104	799	799	25 H7	M16	6,40	16H7	225
46234105	999	499	25 H7	M16	6,40	16H7	171
46234106	999	999	25 H7	M16	6,40	16H7	361

MODULAR PLATES

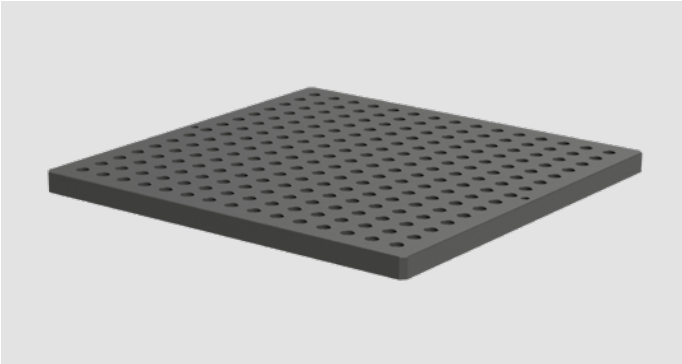

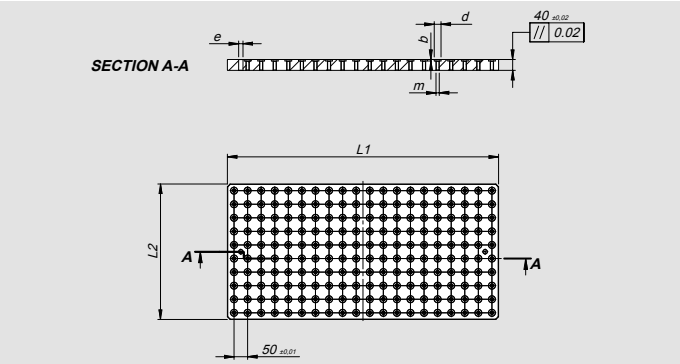

Id. No.	L1	L2	d	m	b	e	No. holes
46234112	499	499	25 H7	M16	6,40	16H7	100
46234113	599	599	25 H7	M16	6,40	16H7	144
46234114	799	799	25 H7	M16	6,40	16H7	256
46234115	999	499	25 H7	M16	6,40	16H7	200
46234116	999	999	25 H7	M16	6,40	16H7	400

GUIDE PLATES

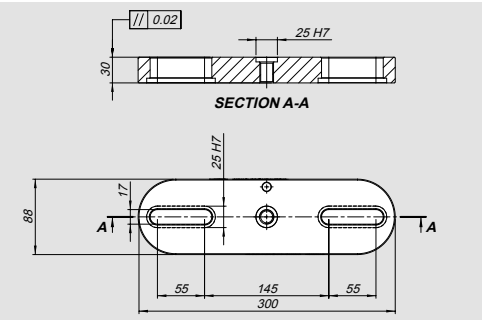

	Id.No.
for TDM 88	46232210

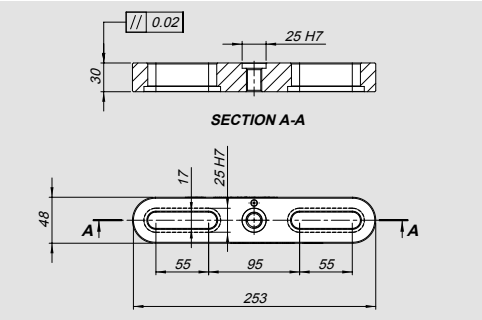

	Id.No.
for TDM 48	46232220

COMPASS PLATES

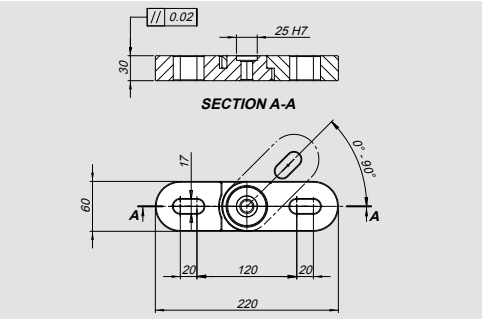

	Id.No.
for TDM 48	46232230

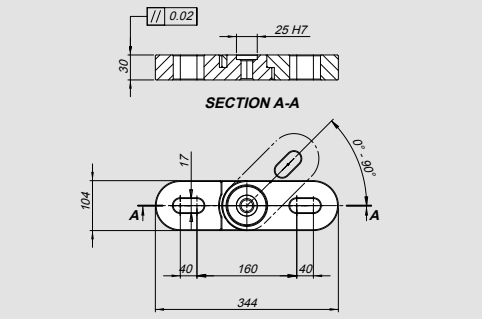

	Id.No.
for TDM 88	46232240

Working example

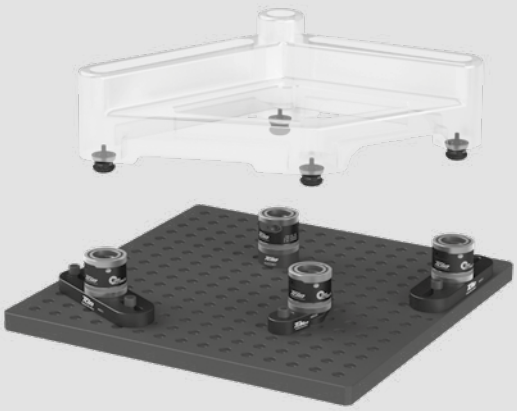

EXTRACTOR

Id. No.
46232150

REDUCTION FOR EXTRACTOR

Id. No.	H
46232153	M18 x 1.5
46232154	M12 x 1.5
46232155	M12
46232156	M10
46232157	M8
46232158	M6

CENTERING BUSH

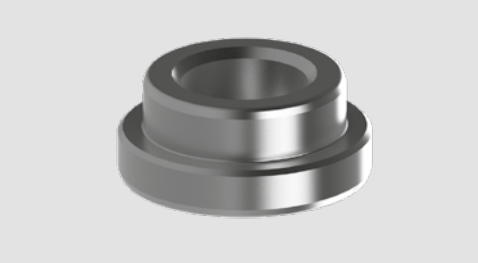

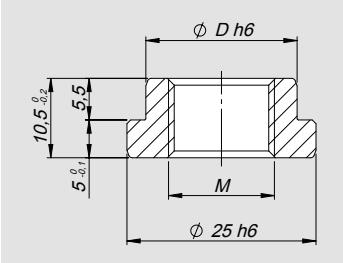

Id. No.	D	Thread for extraction * M
46230916	16	M14 x 1,5
46230918	18	M14 x 1,5
46230920	20	M14 x 1,5
46230922	22	M18 x 1.5
46230924	24	M18 x 1.5
46230925	25	M18 x 1.5

* Extractor Id.No. 46232150

MULTI-SLOT SCREW FOR THE POSITIONING OF CLAMPING UNITS

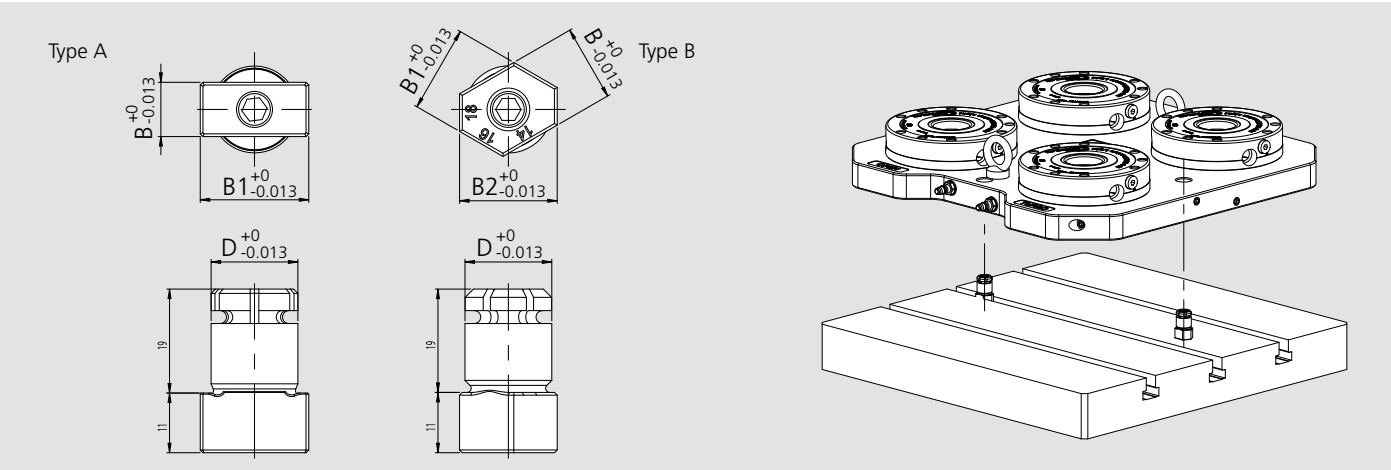

Type	Id. No.	D	B	B1	B2
A: Multi-slot	71290183	16	10	20	-
A: Multi-slot	71290181	16	12	22	-
B: Multi-slot	71290182	16	14	16	18
B: Multi-slot	71290184	20	24	28	32

ALUMINIUM THREADED PLUG FOR GRID PLATES

Type	Id. No.
Aluminium threaded plug Ø 25 M16	57602397
Aluminium threaded plug Ø 24 M16	71290657

ROUNDED MINIPALLET

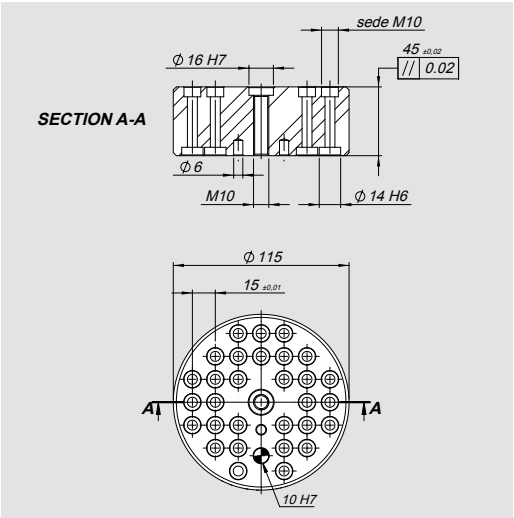

Id. No.
46233111

SQUARE MINIPALLET

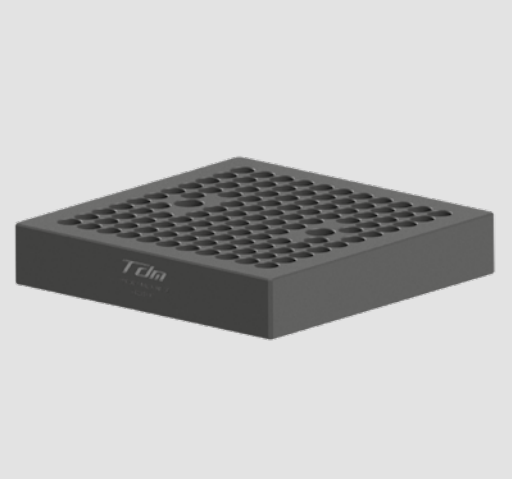

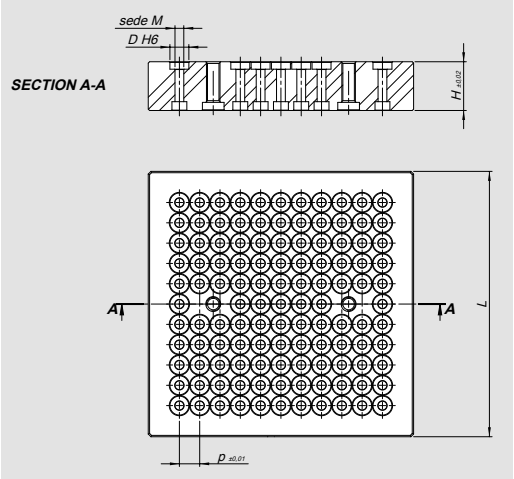

Id. No.	H	L	D	M	p
46233112	36	196	14	M6	15
46233113	36	246	14	M6	15
46233114	36	296	14	M6	15
46233121	36	246	16	M8	20
46233122	36	296	16	M8	20
46233131	46	246	18	M10	25
46233132	46	296	18	M10	25

PIN FOR MINIPALLET

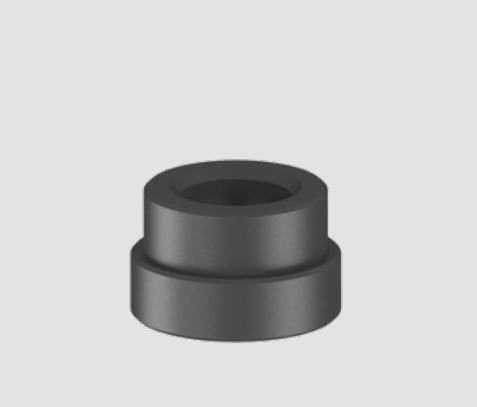

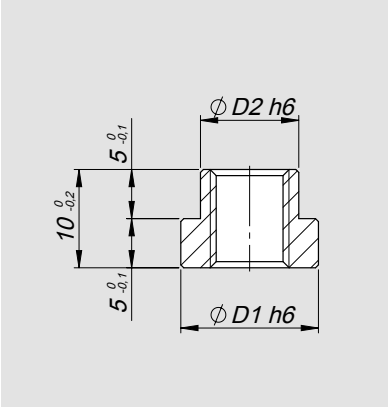

Id. No.	D1	D2	For screw
46233141	14 h6	10 h6	M6
46233142	14 h6	11 h6	M6
46233151	16 h6	12 h6	M8
46233152	16 h6	14 h6	M8
46233161	18 h6	14 h6	M10
46233162	18 h6	16 h6	M10

SPACER FOR MINIPALLET

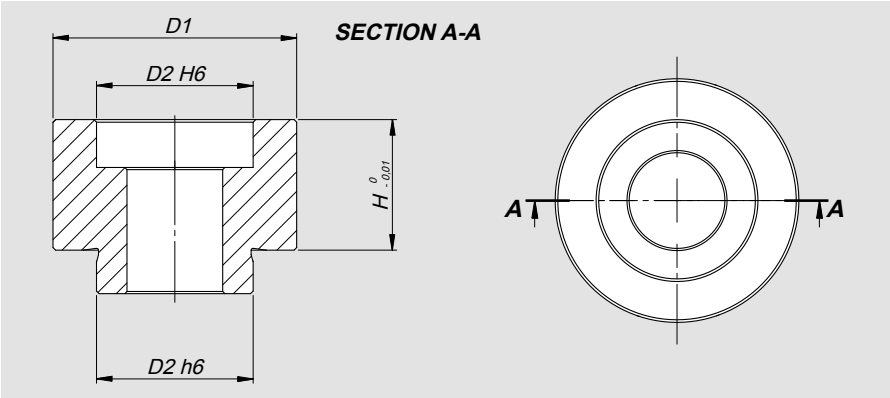

Id. No.	D1	D2	H	For screw
46233371	22	14	8	M6
46233372	22	14	12	M6
46233373	22	14	16	M6
46233381	25	16	10	M8
46233382	25	16	15	M8
46233383	25	16	20	M8
46233391	28	18	15	M10
46233392	28	18	25	M10
46233393	28	18	35	M10

Spacer and pin working example for minipallet

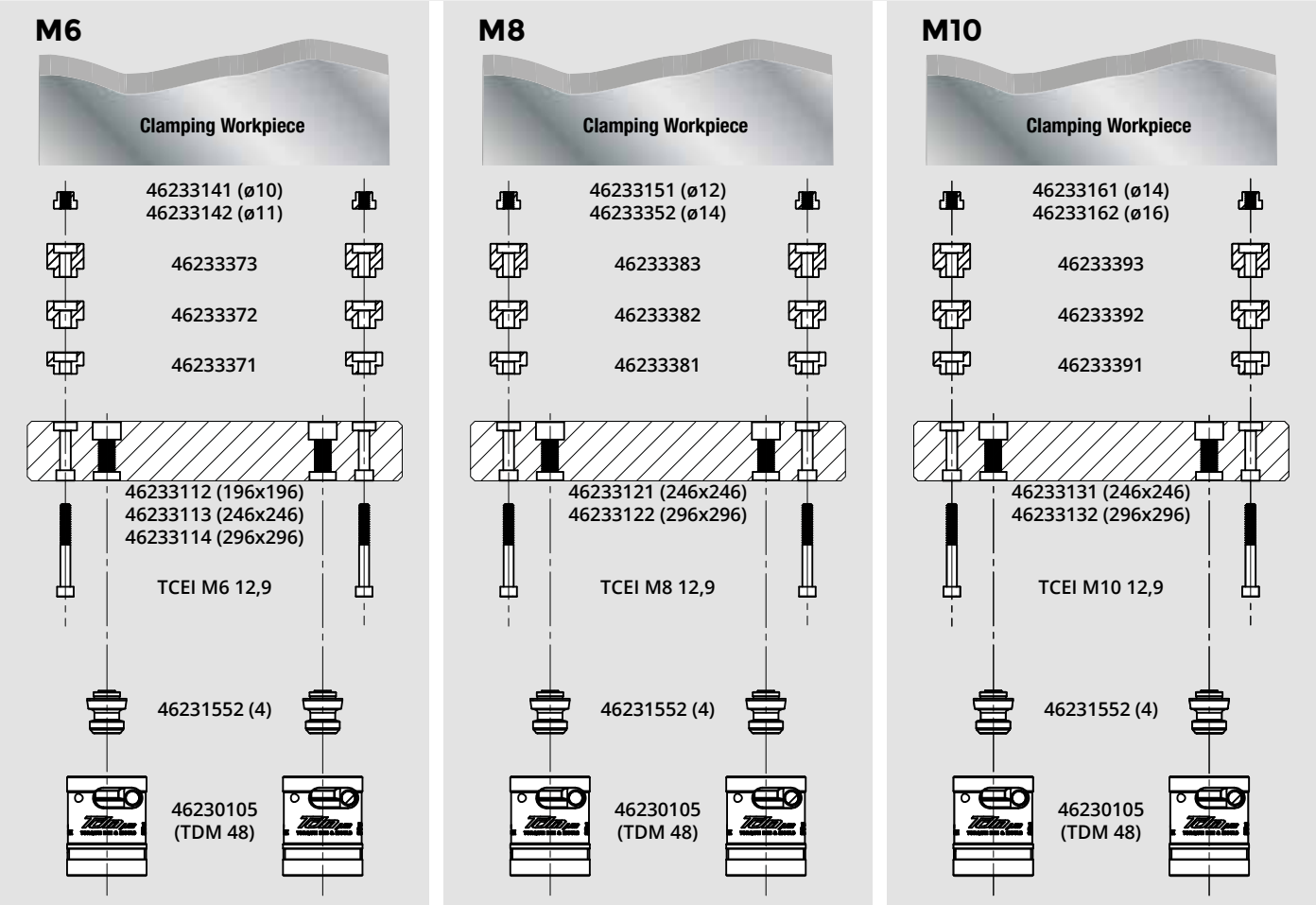

ADAPTOR BETWEEN TDM88, 48 and MINIPALLET

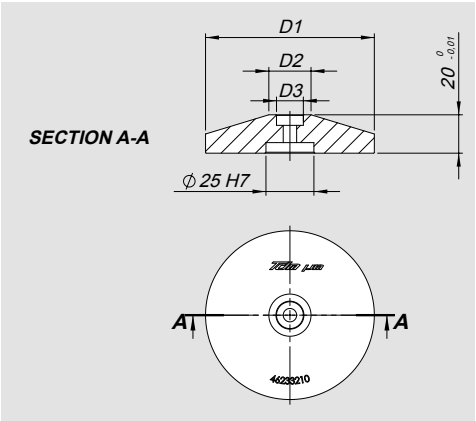

Id. No.	D1	D2	D3
46233210	88	22	14 H6
46233220	88	25	16 H6
46233230	88	28	18 H6
46233260	48	22	14 H6
46233270	48	25	16 H6
46233280	48	28	18 H6

Adaptor working example

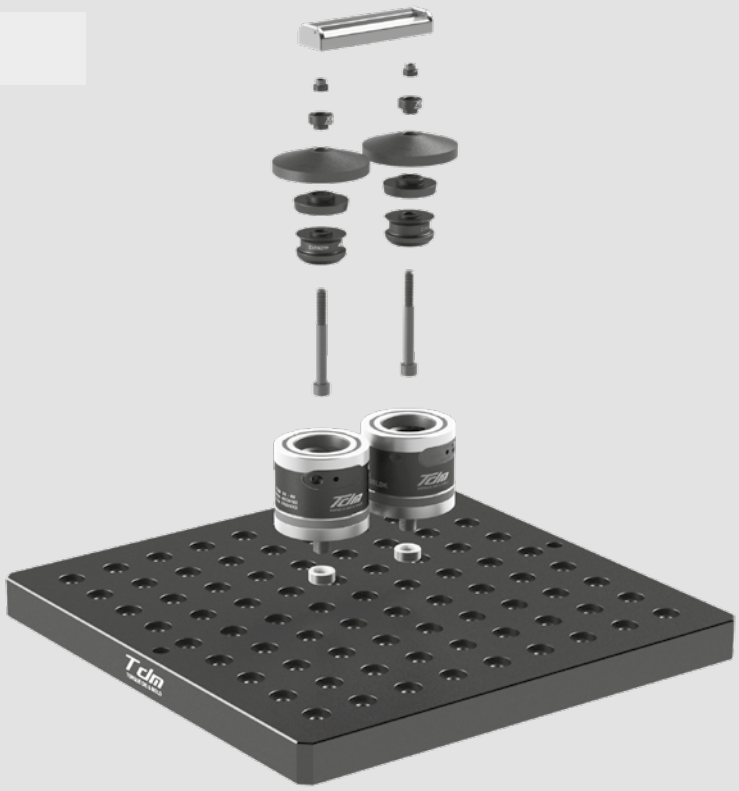

OP 10

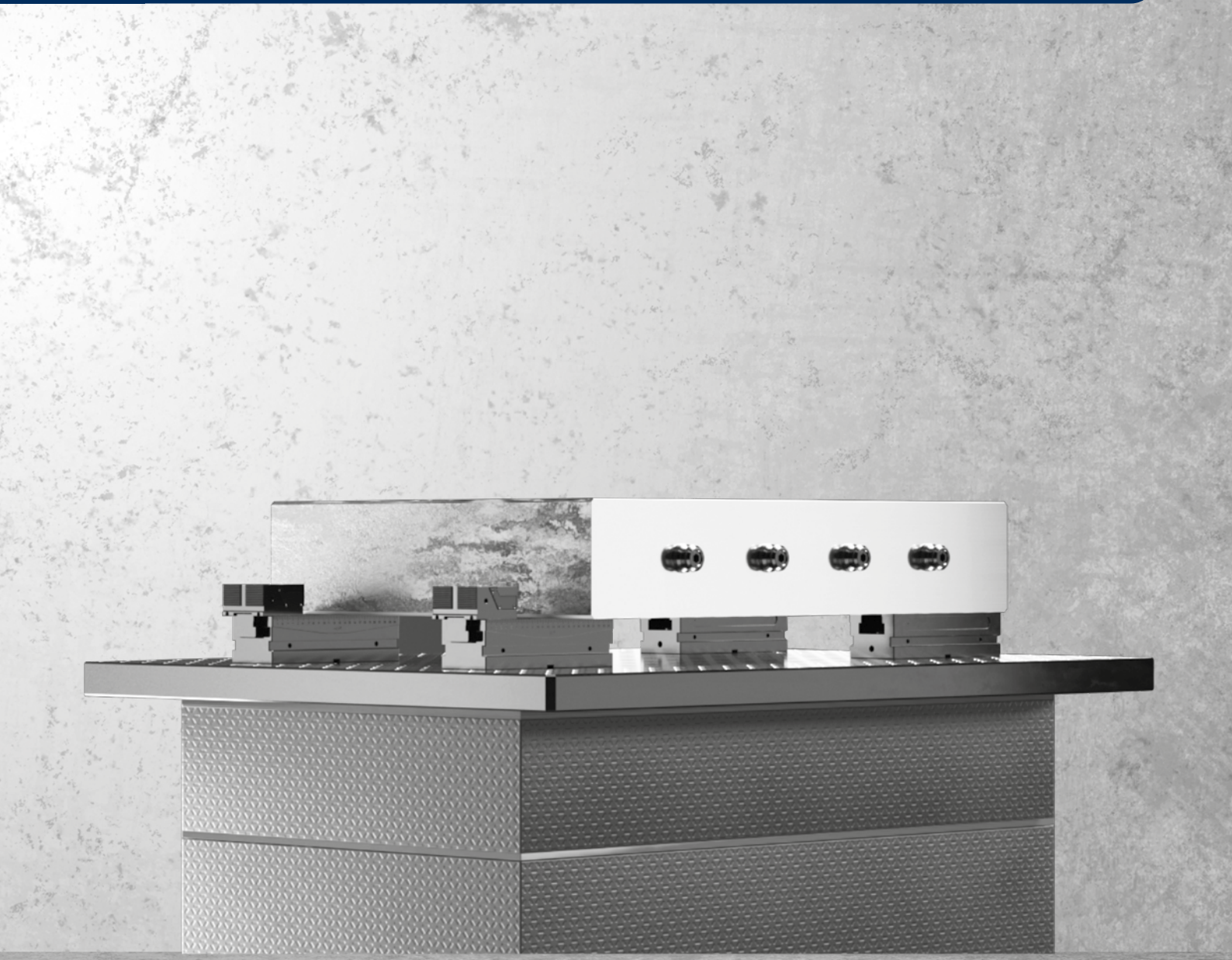

BASE CIVI 90/250

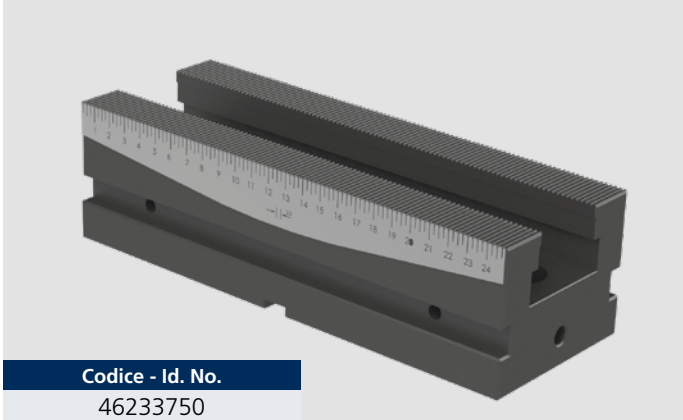

Codice - Id. No.
46233750

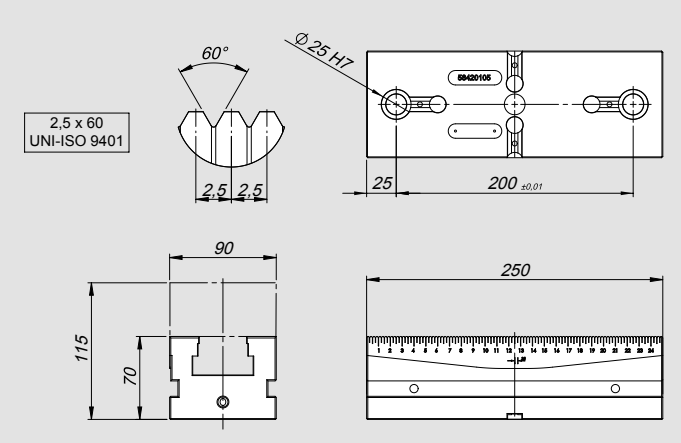

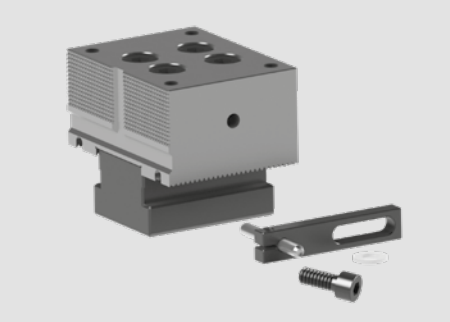

Complete fixed support J90 grooved

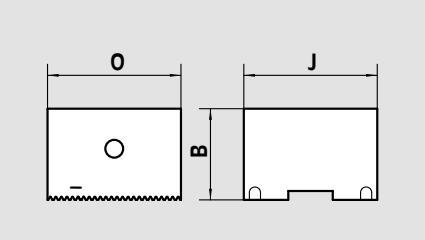

Id. No.	model	B	J	O	Weight
58427200	CIVI 2000/90	45	90	70	2,9

Fixed jaw set Sintergrip J90

complete with 1 work stop, n. 3 SinterGrip inserts STD for steel*

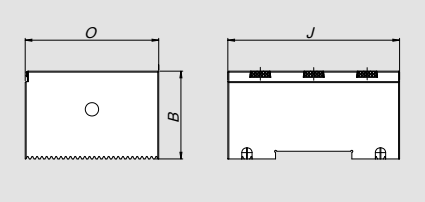

* A richiesta inserti per ALU o HRC
* On request inserts for ALU or HRC

Id. No.	model	B	J	O	Weight
58467290	CIVI 2000/90	45	90	70	2,9

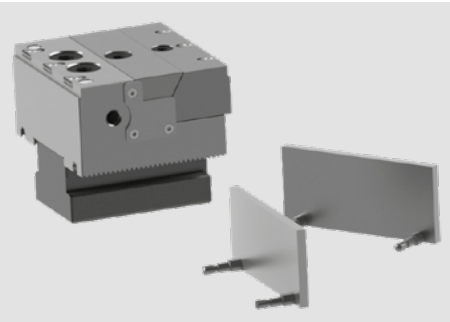

Movable jaw set J90

complete with 1 work stop, n. 6 SinterGrip inserts STD for steel*, n. 1 pair of parallels H42.

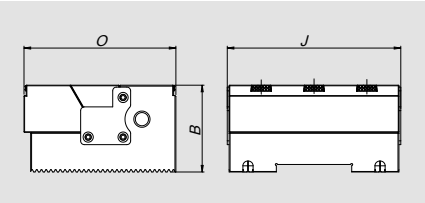

* A richiesta inserti per ALU o HRC
* On request inserts for ALU or HRC

Id. No.	model	B	J	O	Weight
77584690	CIVI 2000/90 x ...	45	90	80	2,9

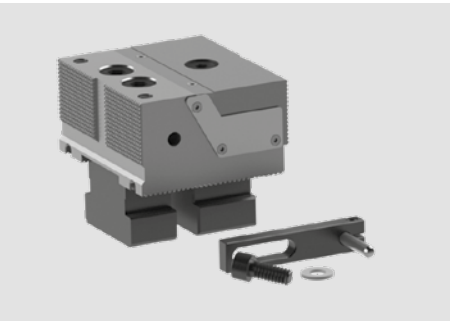

Movable jaw set J90 with grooved jaws

(for raw workpieces)

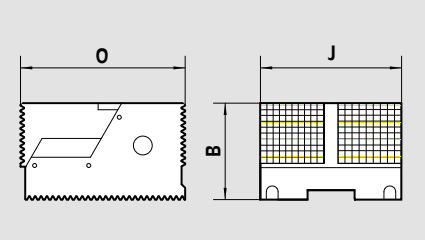

Id. No.	model	B	J	O	Weight
77584228	CIVI 2000/90	45	90	80	2,9

Working example

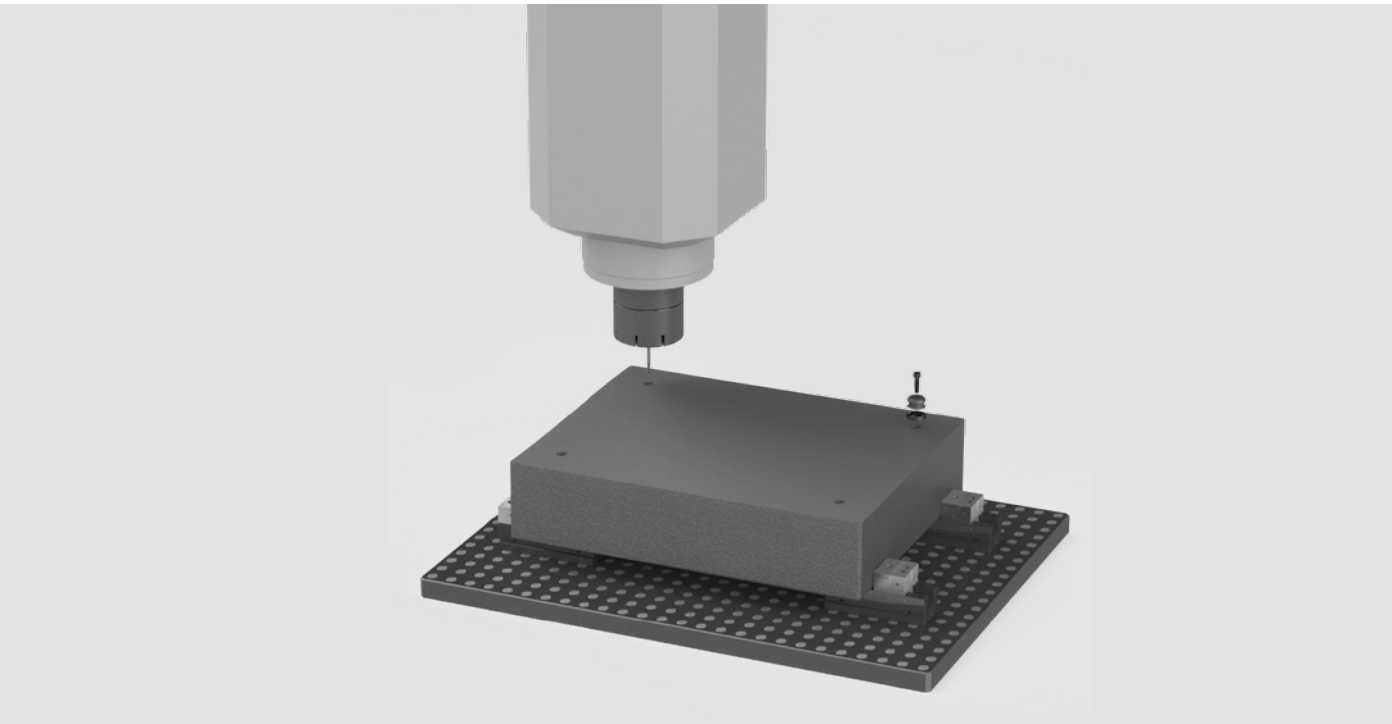

Working example with SinterGrip

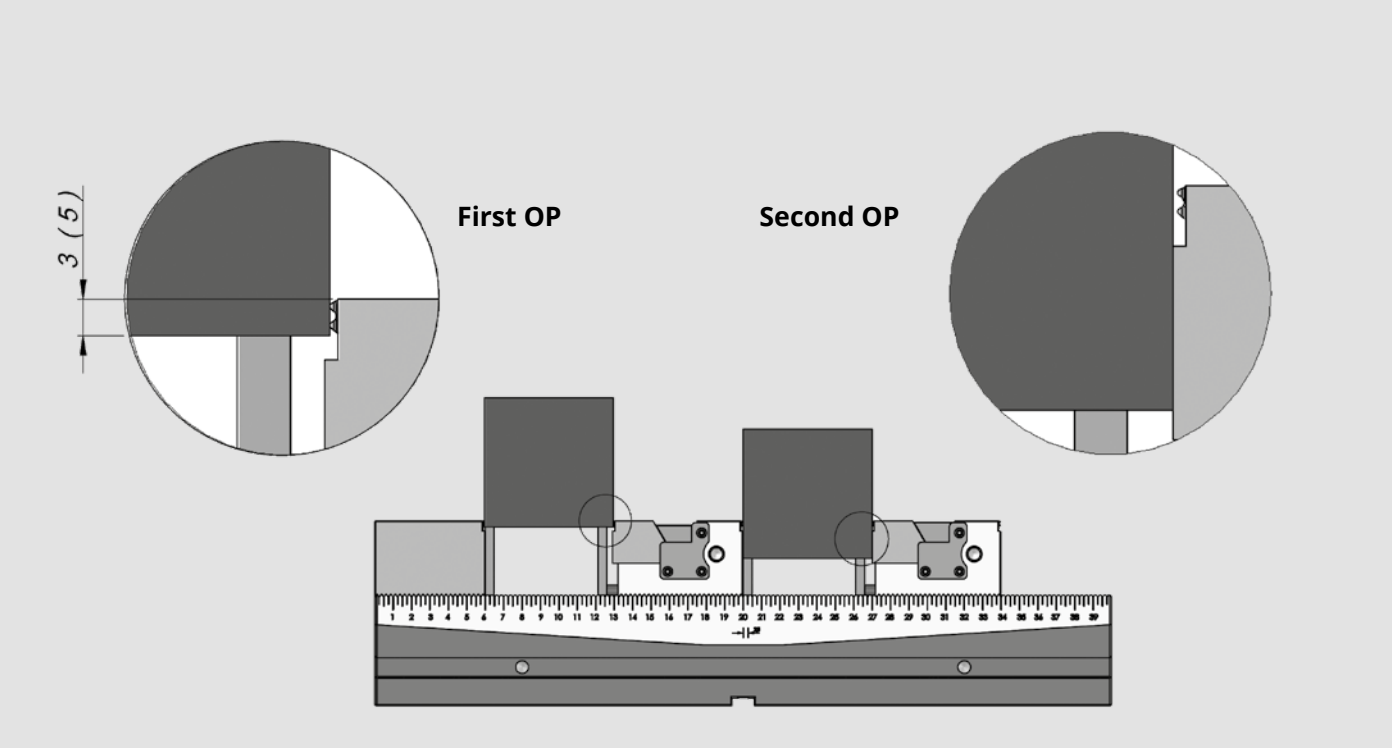

WPS-PPD

Workpiece preparation device

WPS PPD modules for OP10

WPS-PPD 12

WPS-PPD 12F

WPS-PPD 16P

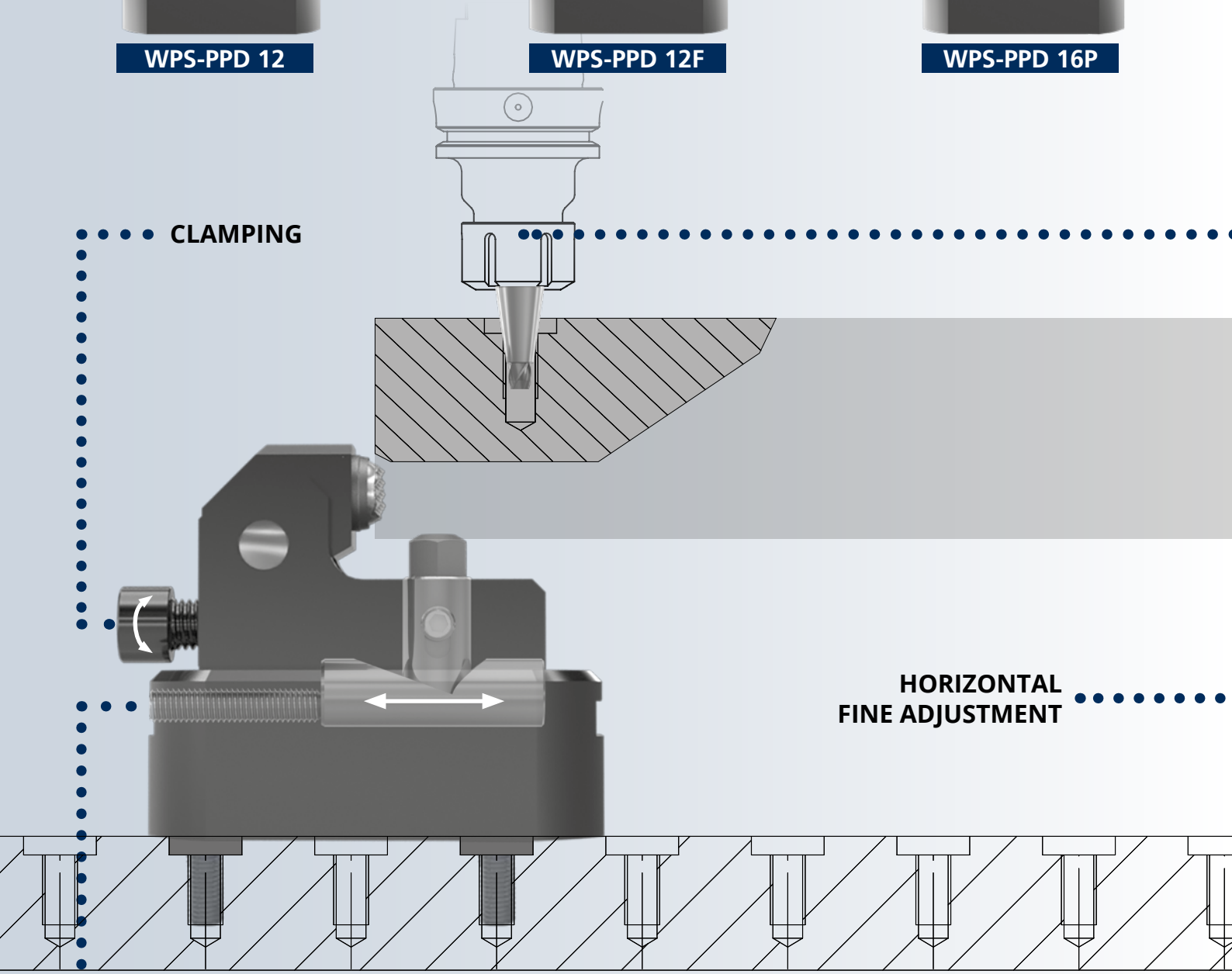

Modularity

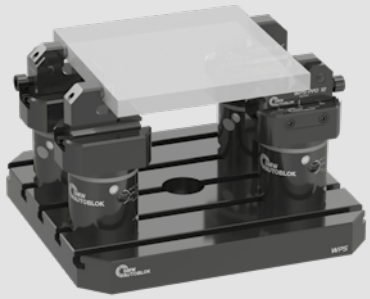

Clamping with/without pendulum
Clamping with/without fixed stop

WPS-PPD FP

WPS-PPD

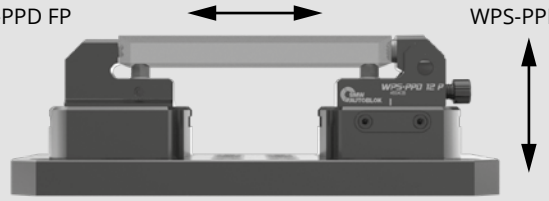

Horizontal fine adjustment / fine adjustment - clamping height

Pendulum feature
WPS-PPD P and FP

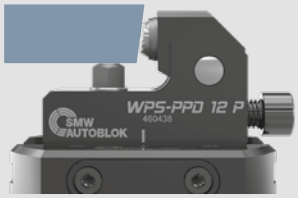

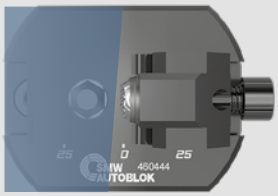

- Due to the integrades pendulum mechanism, the clamping position adjusts itself to the workpiece geometry automatically.
- Therefore, also not angular workpiece areas can be clamped fast and safe.

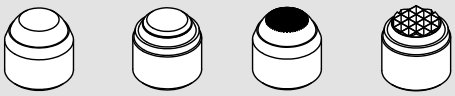

- Thanks to 4 different pendulum inserts, the clamping devices are very flexible in use.

Pre-machining for clamping pins
for workpiece direct clamping with TDM

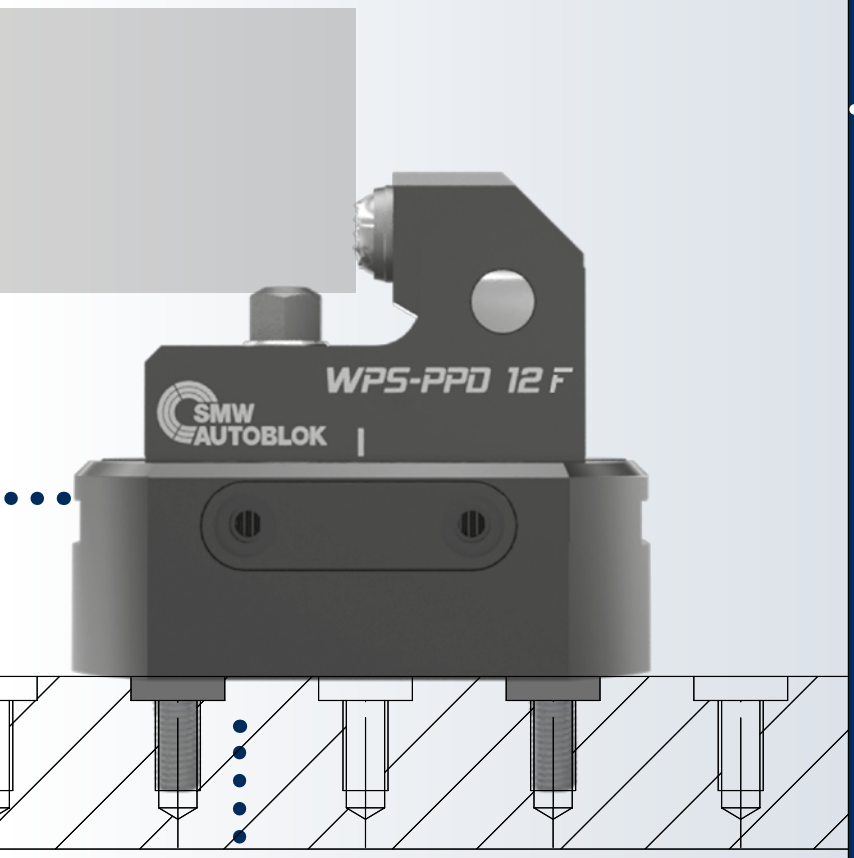

INSTALLATION ON GRID PLATE

Workholding glossary

Modularity

Modular system with a wide range of accessories. Compatible with TDM through direct attachment of clamping pins.

Flexible in application

Option 1: Clamping centrically
Option 2: Clamping centrically with pendulum
Option 3: Clamping against fixed stop
Option 4 Clamping against fixed stop with pendulum

Increase in efficiency

Enormous reduction of setup costs by preparing for direct clamping with TDM clamping modules.

WPS-PPD

Workpiece preparation device

■ **Ideal for OP 10: preparation of the workpiece for WPS**

Application/Benefits

- Ideal for OP 10: preparation of the workpiece for WPS
- Very strong and compact design for best accessibility
- Clamping height of the workpiece adjustable
- Easy and flexible mounting
- Direct interface for grid dimension 40/50/80 mm and interface for zero point system APS / TDM

Technical features

- Manual actuation
- Horizontal position adjustable
- Position lockable clamping
- Pull-down effect
- Different heights for the workpiece support by means of different stop pins
- Fine adjustment of the clamping height

Standard equipment

WPS-PPD with UGE grip insert - carbide without stop pin
WPS-PPD P without pendulum insert and stop pin

WPS-PPD

- Fixed stop without pendulum
- Size 12 and 16
- Horizontal adjustment

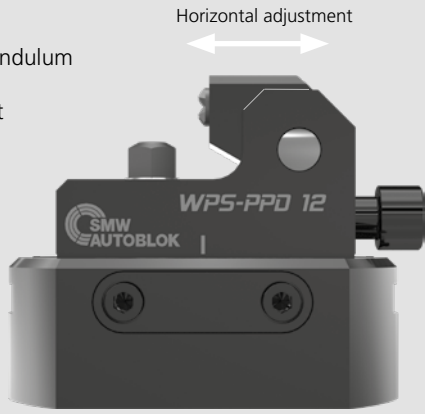

WPS-PPD P

- P = Pendulum insert
- Size 12 and 16
- Horizontal adjustment

Application example

Clamping with 2 WPS-PPD with fixed grip insert

Required workpiece preparation device:
2x WPS-PPD 12

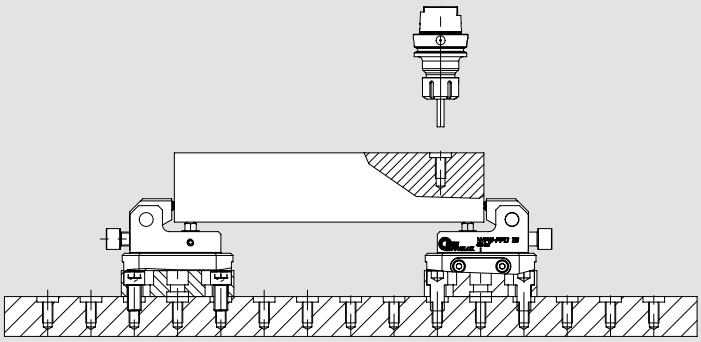

Type	Id. No.
Workpiece preparation device WPS-PPD 12	460346
Workpiece preparation device WPS-PPD 12 P	460430
Stop Pin ALB / X=5 mm (2x)	017603
Pendulum insert gripper	208939

WPS-PPD

■ Dimensions and technical data

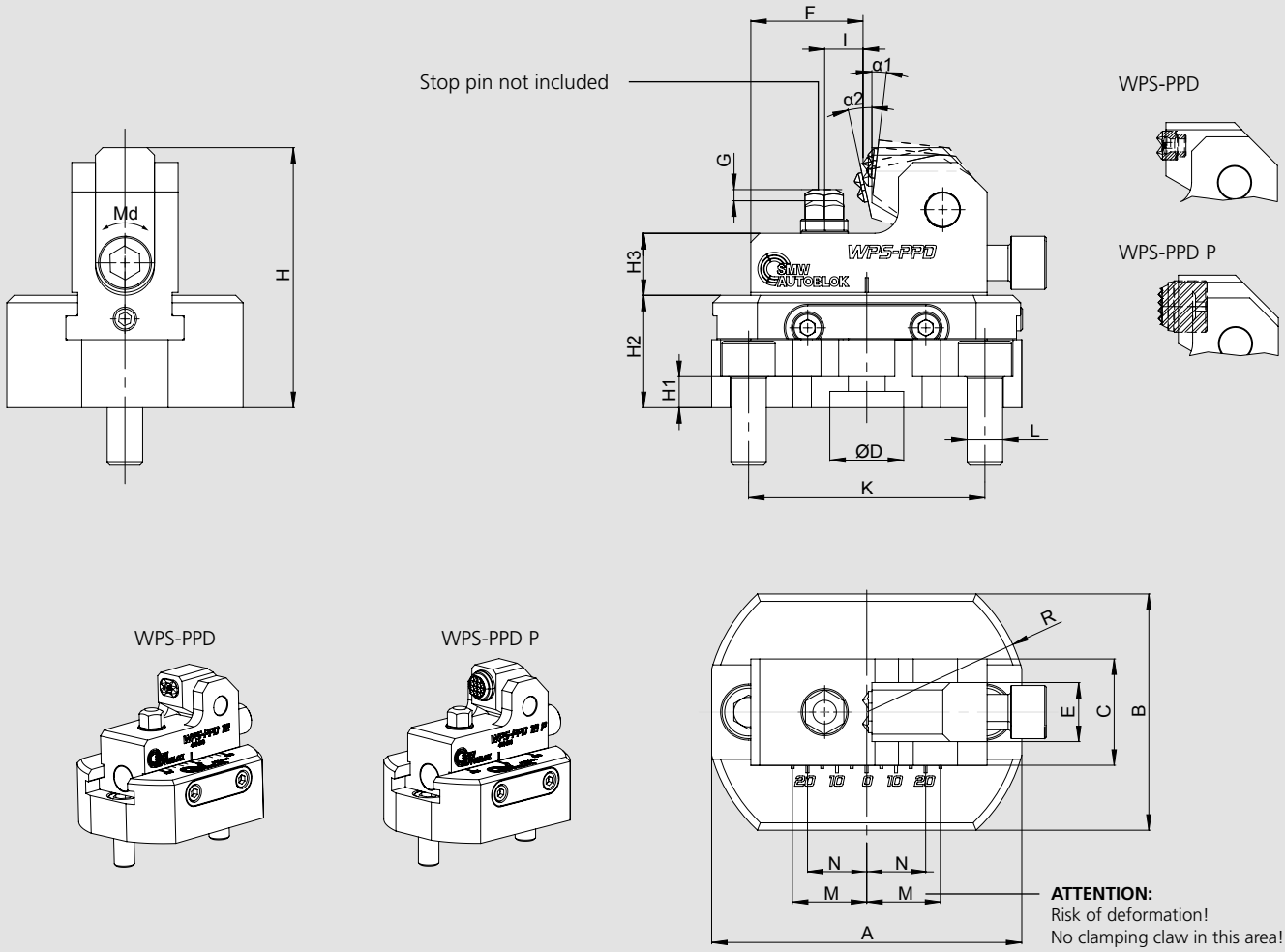

SMW-AUTOBLOK WPS-PPD		WPS-PPD 12	WPS-PPD 12 P*	WPS-PPD 16	WPS-PPD 16 P*
Codice - Id. No.		**460346**	**460430**	**460400**	**460431**
	A	105	105	130	130
	B	80	80	100	100
Width base body	**C**	36	36	45	45
Fit	**D H7**	25	25	25	25
	E	20	20	25	25
	F	38	38	53.75	53.75
Stroke stop pin	**G**	5	5	7	7
Height	**H**	88	88	116	116
	H1	10.5	10.5	13.5	13.5
	H2	38	38	50	50
	H3	21	21	25	25
	I	13	13	18.75	18.75
Distance min. / max.	**K**	50 - 80	50 - 80	80 - 100	80 - 100
ISO4762-12.9	**L**	M12	M12	M16	M16
Stroke horizontal adjustment	**M**	± 25	± 25	± 33	± 33
	N	22.5	22.5	27.5	27.5
Swinging angle / stroke in mm	**α1°**	6.2	6.2	6.2	6.2
Swinging angle / stroke in mm	**α2°**	12	12	12	12
Angle pendulum	**β°**	-	± 9°	-	± 9°
Max. total clamping force	kN	20	20	30	30
Max. actuating torque Md	Nm	40	40	65	65

Pendulum inserts not included

WPS-PPD F/FP

Workpiece preparation device

■ **Ideal for OP 10: preparation of the workpiece for WPS**

Application/Benefits

- Ideal for OP 10: preparation of the workpiece for TDM
- Very strong and compact design for best accessibility
- Clamping height of the workpiece adjustable
- Easy and flexible mounting
- Direct interface for grid dimension 40/50 mm and interface for zero point system APS / TDM

Technical features

- Manual actuation (SW 10)
- Horizontal position adjustable (0-50 mm)
- Position lockable clamping
- Pull-down effect
- Different heights for the workpiece support by means of different stop pins
- Fine adjustment of the clamping height

Standard equipment

WPS-PPD with UGE grip insert - carbide without stop pin
WPS-PPD P without pendulum insert and stop pin

WPS-PPD F

- Fixed stop without pendulum
- Size 12 and 16
- Horizontal adjustment

WPS-PPD FP

- P = Pendulum insert
- Size 12 and 16
- Horizontal adjustment

Application example

Clamping with 1 WPS-PPD with fixed grip insert against fixed stop WPS-PPD 12 F

Required workpiece preparation device:
1x WPS-PPD 12 + 1× WPS-PPD 12 F

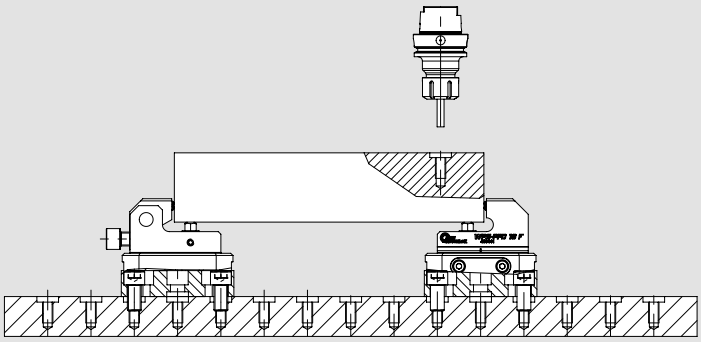

Type	Id. No.
Workpiece preparation device WPS-PPD 12	460346
Workpiece preparation device WPS-PPD 12 FP	460434
Stop Pin ALB / X=5 mm (2x)	017603
Pendulum insert gripper	208939

WPS-PPD F/FP

■ Dimensions and technical data

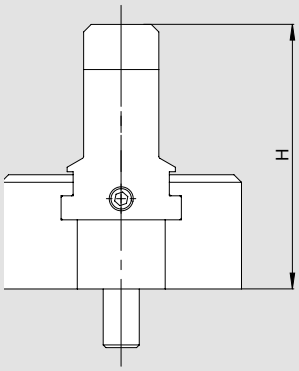

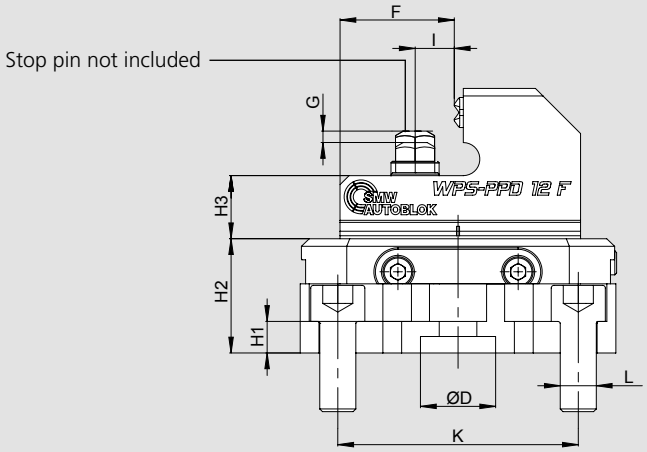

WPS-PPD

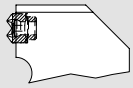

WPS-PPD P

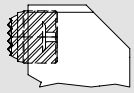

WPS-PPD F

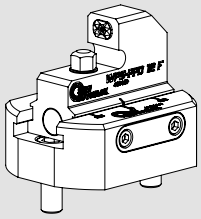

WPS-PPD FP

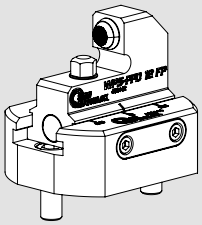

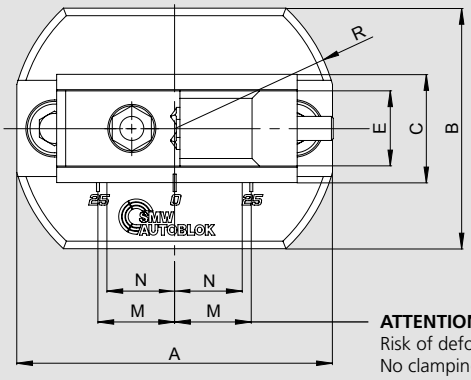

ATTENTION:
Risk of deformation!
No clamping claw in this area!

SMW-AUTOBLOK WPS-PPD		WPS-PPD 12 F	WPS-PPD 12 FP*	WPS-PPD 16 F	WPS-PPD 16 FP*
Id. No.		**460432**	**460434**	**460433**	**460435**
	A	105	105	130	130
	B	80	80	100	100
Width base body	**C**	36	36	45	45
Fit	**D H7**	25	25	25	25
	E	25	25	30	30
	F	38	38	53.75	53.75
Stroke stop pin	**G**	5	5	7	7
Height	**H**	88	88	116	116
	H1	10.5	10.5	13.5	13.5
	H2	38	38	50	50
	H3	21	21	25	25
	I	13	13	18.75	18.75
Distance min. / max.	**K**	50 - 80	50 - 80	80 - 100	80 - 100
ISO4762-12.9	**L**	M12	M12	M16	M16
Stroke horizontal adjustment	**M**	± 25	± 25	± 33	± 33
Angle pendulum	**β°**	-	± 9°	-	± 9°
Max. total clamping force	kN	20	20	30	30

* Pendulum inserts not included

CENTERING BUSH

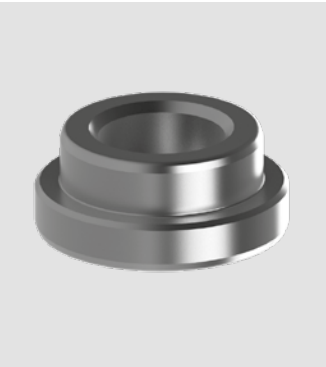

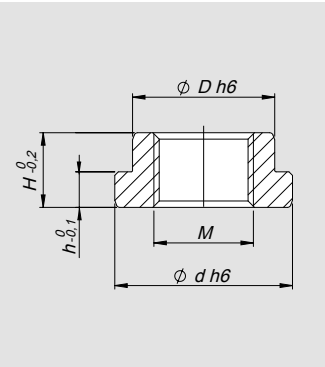

Id. No.	d	D	H	h	Thread for extraction * M
46230916	25	16	10,5	5	M14 x 1,5
46230918	25	18	10,5	5	M14 x 1,5
46230920	25	20	10,5	5	M14 x 1,5
46230922	25	22	10,5	5	M18 x 1.5
46230924	25	24	10,5	5	M18 x 1.5
46230925	25	25	10,5	5	M18 x 1.5

Extractor page 48

STOP PINS FOR WPS-PPD

For **WPS-PPD 12/16**

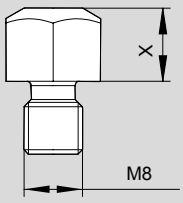

For **WPS-PPD 24**

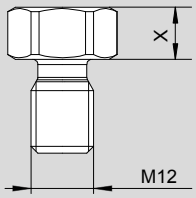

For WPS-PPD 12 / 16	Id. No.
Stop pin ALB / X=5 mm	017603
Stop pin ALB / X=10 mm	016514
Stop pin ALB / X=15 mm	016515
Stop pin ALB / X=20 mm	016516
Stop pin ALB / X=25 mm*	081191

For WPS-PPD 24	Id. No.
Stop pin ALB / X=10 mm	210058
Stop pin ALB / X=15 mm	210060
Stop pin ALB / X=20 mm	210061
Stop pin ALB / X=25 mm	210062
Stop pin ALB / X=30 mm	210063

* Only suitable for WPS-PPD 16P/16 FP

PENDULUM INSERT

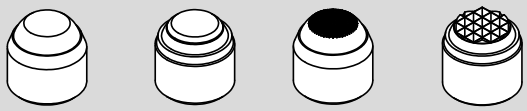

For WPS-PPD 12 / 16	Id. No.
Pendulum insert smooth	208937
Pendulum insert Pom-Insert	208938
Pendulum insert gripper	208939
Pendulum insert HM-Gripper	208940

For WPS-PPD 24	Id. No.
Pendulum insert smooth	208937
Pendulum insert Pom-Insert	208938
Pendulum insert gripper	208939
Pendulum insert HM-Gripper	208940

UGE-10 GRIP INSERT FOR WPS-PPD

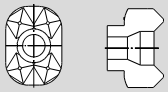

For WPS-PPD F	Id. No.
Fixed UGE-10 grip insert *	081845F

* Pendulum insert not included

FEMALE THREAD

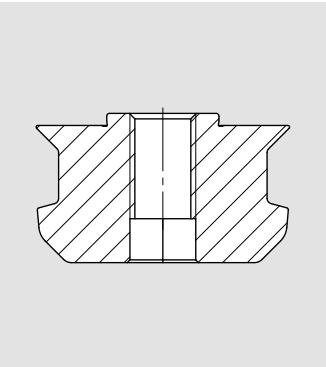

Id. No.	M
46230316	M16 F

CENTERING RINGS

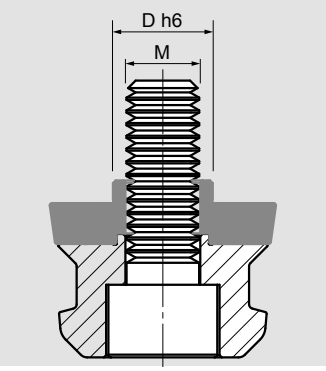

Id. No.	D	M	
46231125	25 h6	M10 / M12 / M16	A

WPS-PPD

Clamping bar for WPS-PPD

■ **Ideal for OP 10: preparation of the workpiece for WPS**

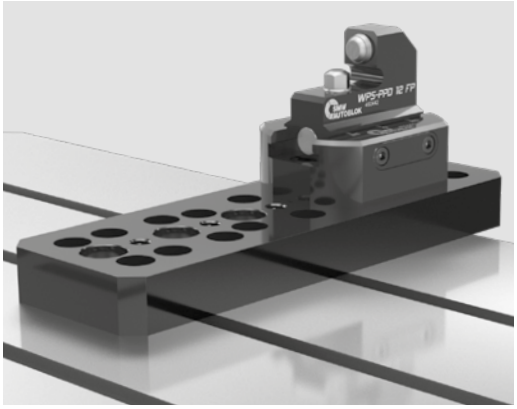

Application/Benefits

- Easy and flexible use of WPS-PPD direct clamping devices
- Fine adjustment on T-slot tables
- Mounting of WPS-PPD on grid plates between two row of holes possible
- Protected against corrosion
- Very strong version
- Undrilled version for customized finish machining

Standard equipment

Clamping bar WPS-PPD

Options

Clamping bar WPS-PPD 300 Id. No. 460447 (drilled)

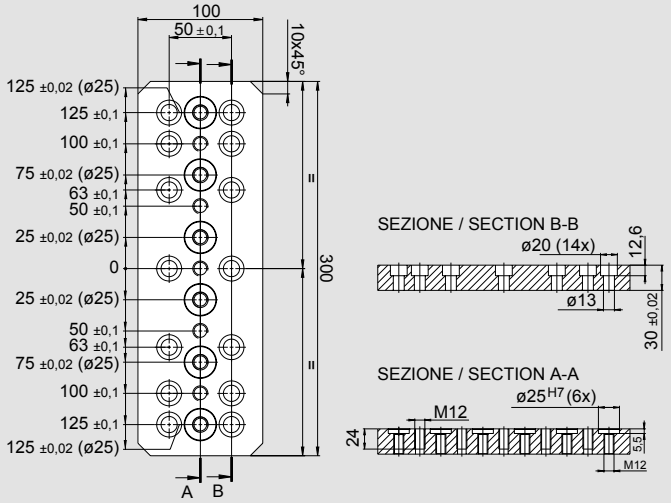

Clamping bar WPS-PPD 300 Id. No. 460448 (undrilled)

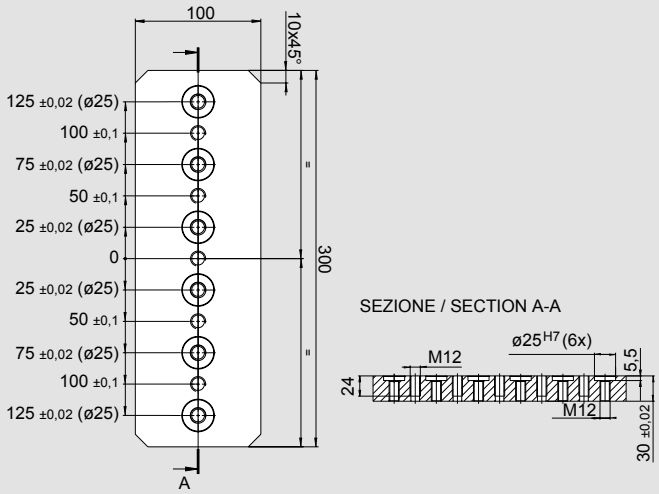

Clamping bar WPS-PPD 440 Id. No. 467174 (drilled)

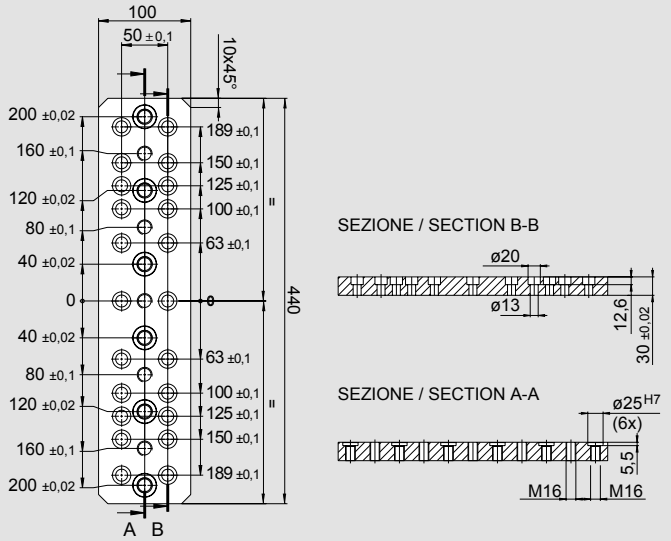

Clamping bar WPS-PPD 440 Id. No. 467173 (undrilled)

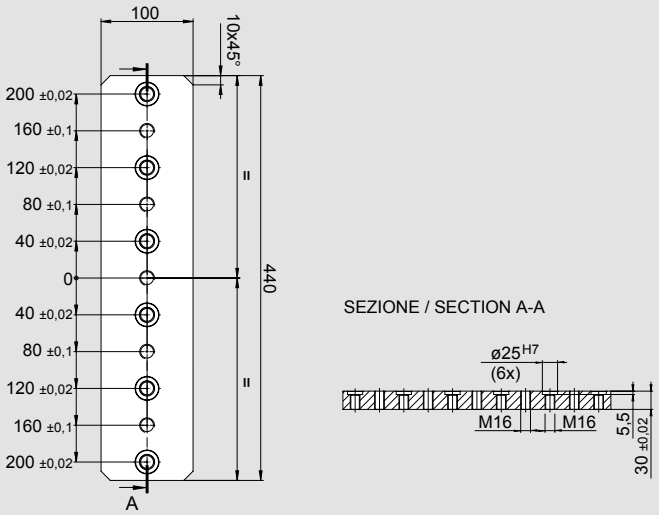

	Clamping bar (drilled)		Clamping bar (undrilled)	
Type	**300**	**440**	**300**	**440**
Id. No.	460447	467174	460448	467173

Tdm APS

APS 140

Module height extension

Application/Benefits

- Pre-assembled clamping unit with 1 piece APS 140 Premium
- Universal applicable
- Fast and easy set-up

Technical features

- 3 clamping slides
- Repeatability < 0.005 mm
- Turbo function to increase the pull-in forces (pull-in force without Turbo 7.5 kN)
- Anti rotating protection
- Air cleaning

Standard equipment

Clamping unit with 1 piece APS 140 Premium

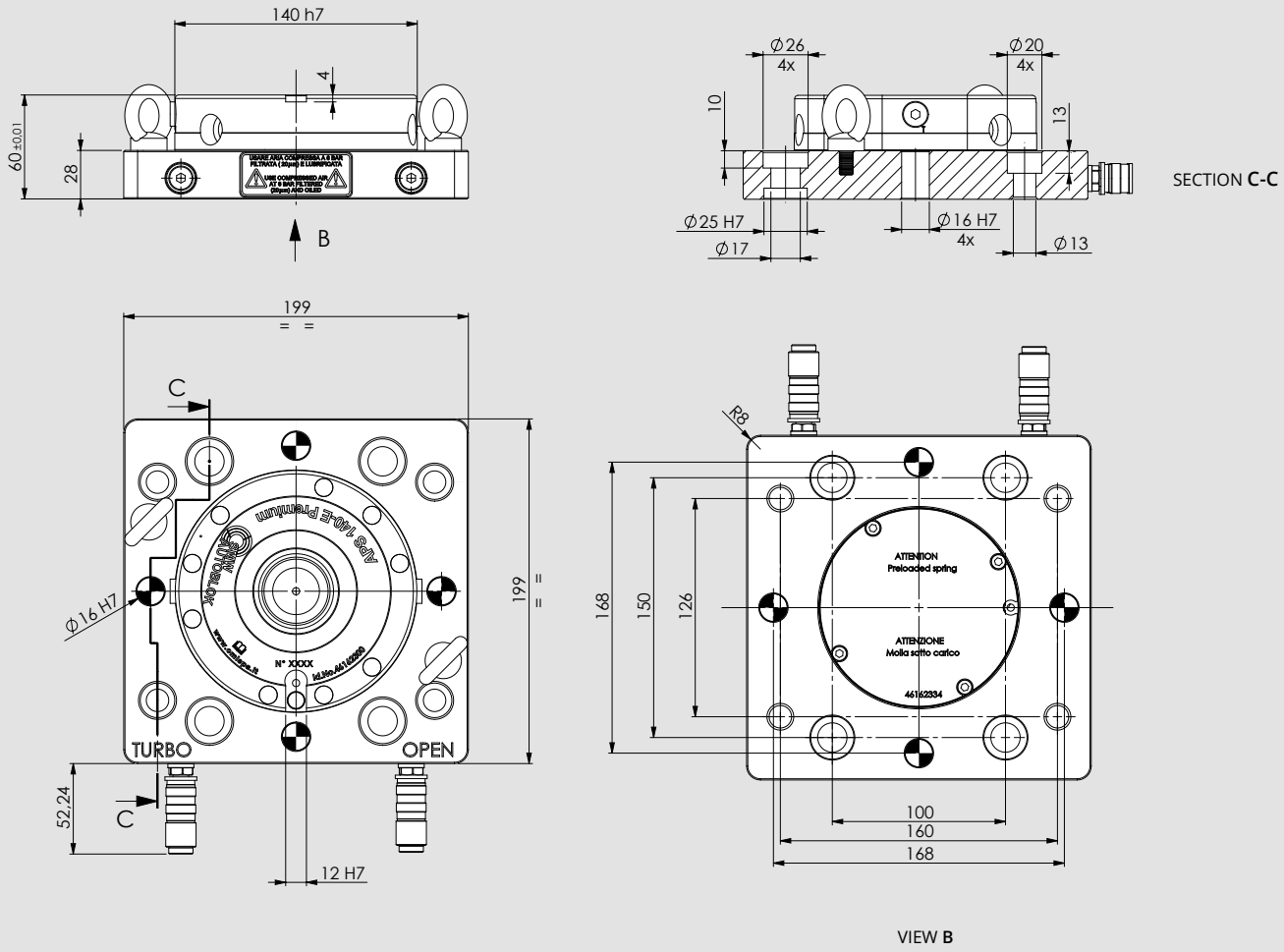

Type	Id. No.	Heigh mm	Weight kg
Module extention with 1 APS 140 Premium	46168410	60	11

APS 140

Application/Benefits

- Pre-assembled clamping unit with 2 pieces APS 140 Premium Light or Basic
- Universal applicable
- Fast and easy set-up

Technical features

- 3 clamping slides (Basic: 2 clamping slides)
- Repeatability < 0.005 mm
- Turbo function for increasing the pull-in forces (pull-in force without Turbo 7.5 kN)
- Air cleaning (only Premium Light)
- Grid dimension 200 mm

Standard equipment

Clamping unit with 2 pieces APS 140 Premium Light or Basic
Quick pneumatic connections

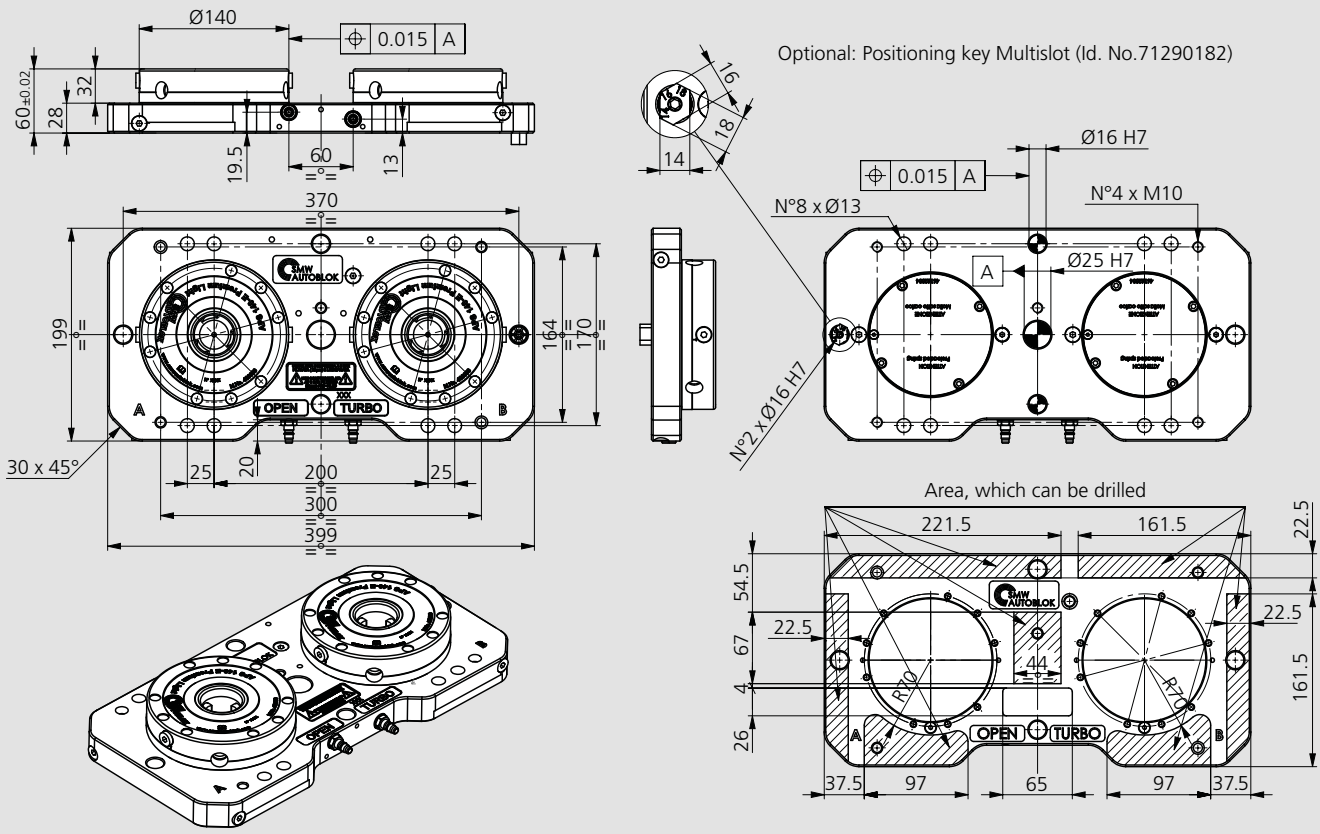

Type	Id. No.	Pull-in force with Turbo kN	Repeatability mm	Weight kg
Clamping unit with 2 APS 140-E Premium Light	460020	26*	< 0.005	21
Clamping unit with 2 APS 140-E Basic	460021	26*	< 0.005	21

* For each module.

APS 140

Module height extension

Application/Benefits

- Pre-assembled clamping unit with 4 pieces APS 140 Premium Light or Basic
- For 5-axis machining center
- Universal applicable
- Fast and easy set-up

Technical features

- 3 clamping slides (Basic: 2 clamping slides)
- Repeatability < 0.005 mm
- Turbo function to increase the pull-in forces (pull-in force without Turbo 7.5 kN)
- Air cleaning (only Premium Light)

Standard equipment

Clamping unit with 4 pieces APS 140 Premium Light or Basic
Quick pneumatic connections

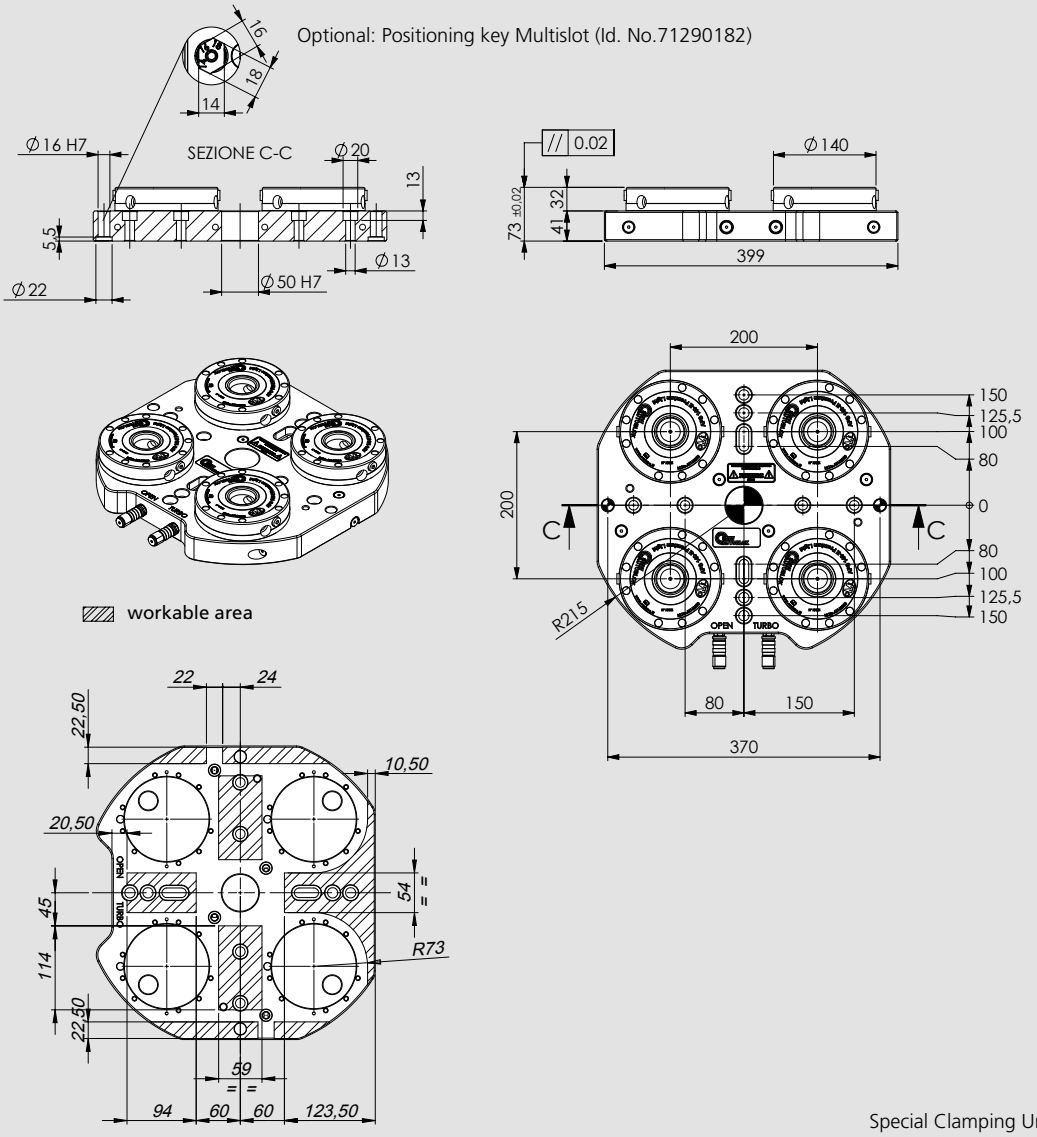

Special Clamping Unit on request

Type	Id. No.	Pull-in force with Turbo kN	Repeatability mm	Weight kg
Clamping unit with 4 APS 140 Premium Light	46168020	26*	< 0.005	45
Clamping unit with 4 APS 140 Basic	46168025	26*	< 0.005	45

* For each module.

INTERFACE FLANGE TDM 48-88 - APS 140/160 complete with screws (not single use)

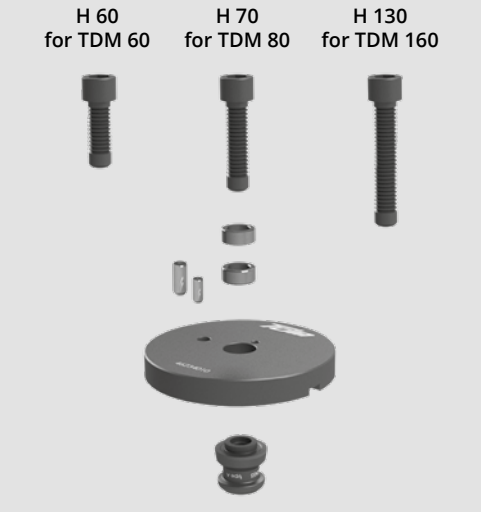

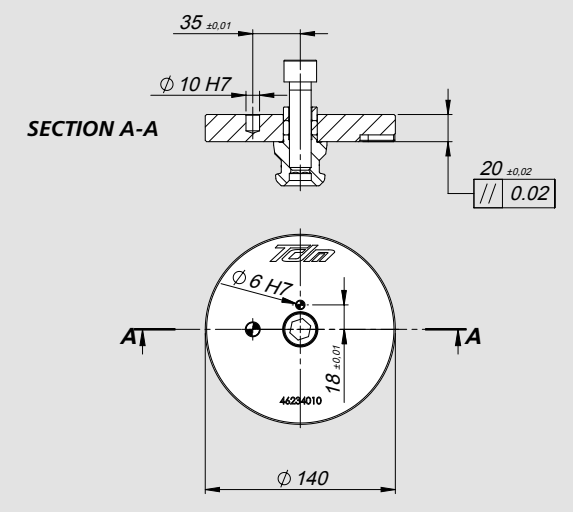

Type	Id. No.
APS140	46234010
APS160	46234020

INTERFACE FLANGE TDM88 - APS 190 complete with screws

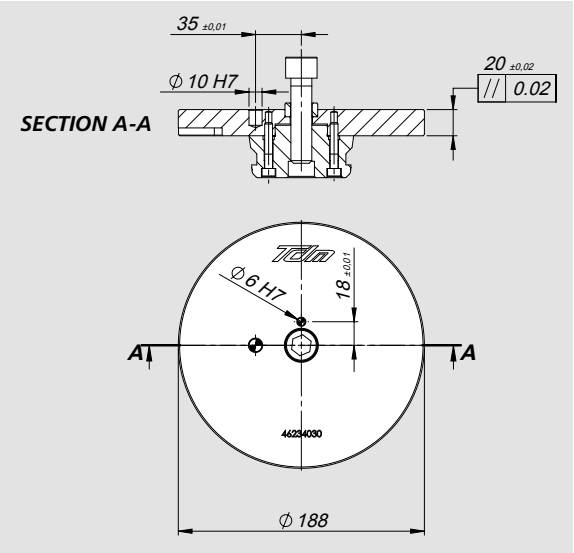

Id. No.
46234030

Working examples

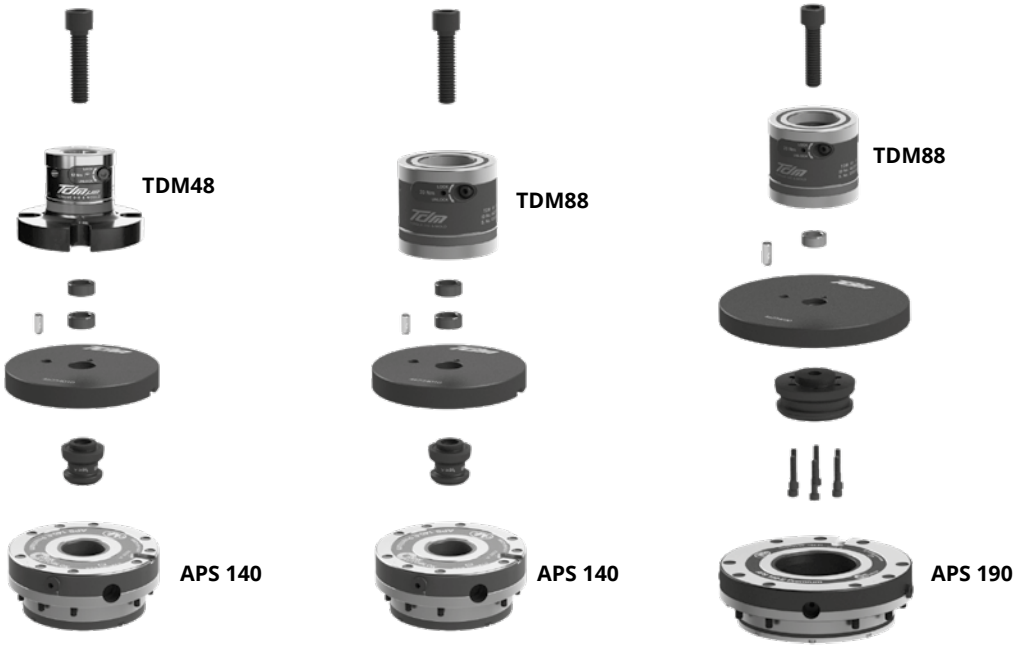

APS 140

Module height extension

Working examples

Positions of the clamping pins

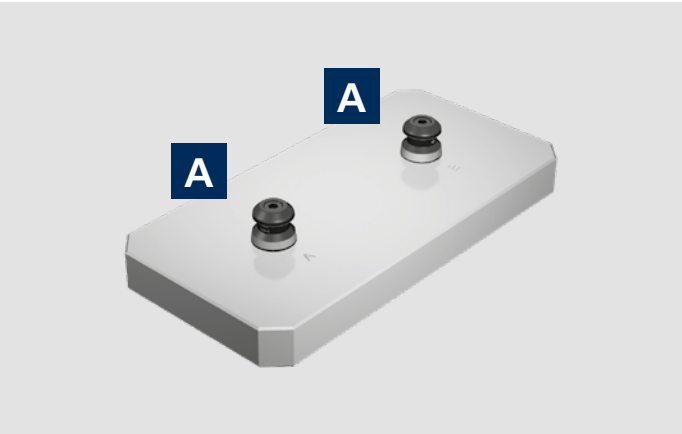

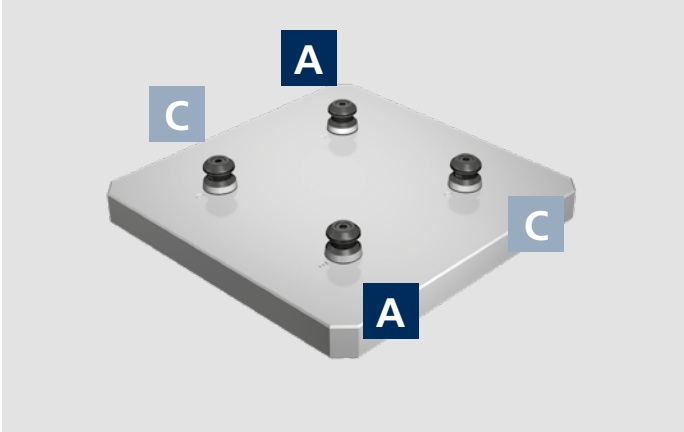

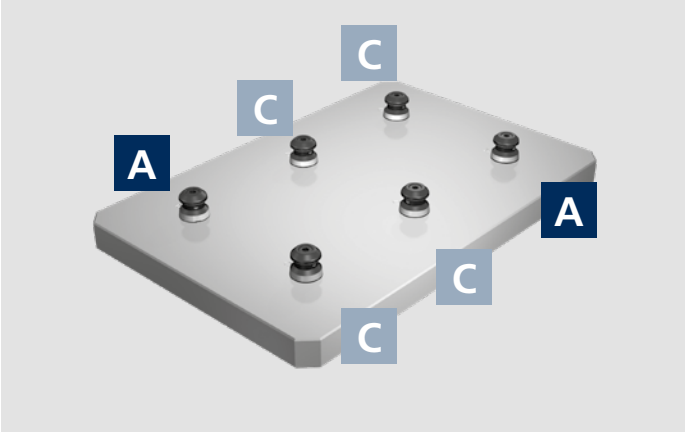

Posizionamento perni flottanti - Positions of the floating pins

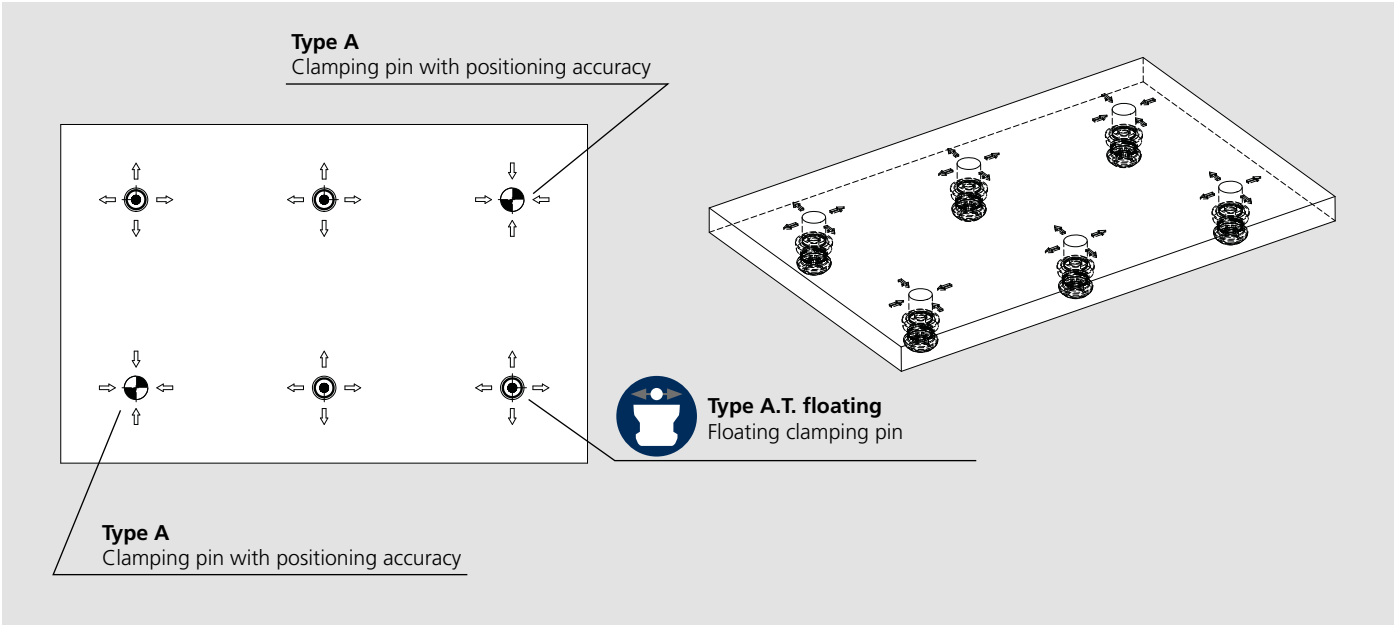

ISO METRIC PITCH

	Screw 12.9	Hex Wrench	Resistant Section rated mm²	Max torque Nm
TDM 88	M12 x 1.75	10	84,3	120
TDM 88	M16 x 2	14	157	300
TDM 48	M6	3	20,1	14
TDM 48	M8	4	36,6	34
TDM 48	M10	5	58	70

MAXIMUM USAGE LIMIT

Screw 12.9		Maximum Usage Limit		
Thread on steel with Rm ≥ 950 N/mm²		Until to **Ft** Admissible lateral force	Until to **Fr** Admissible holding force	Until to **Fd** Admissible loading force
TDM 88	M12 x 1.75	30 kN	50 kN	100 kN
TDM 88	M16 x 2	30 kN	100 kN	100 kN
TDM 48	M6	10 kN	12 kN	75 kN
TDM 48	M8	10 kN	22 kN	75 kN
TDM 48	M10	10 kN	35 kN	75 kN

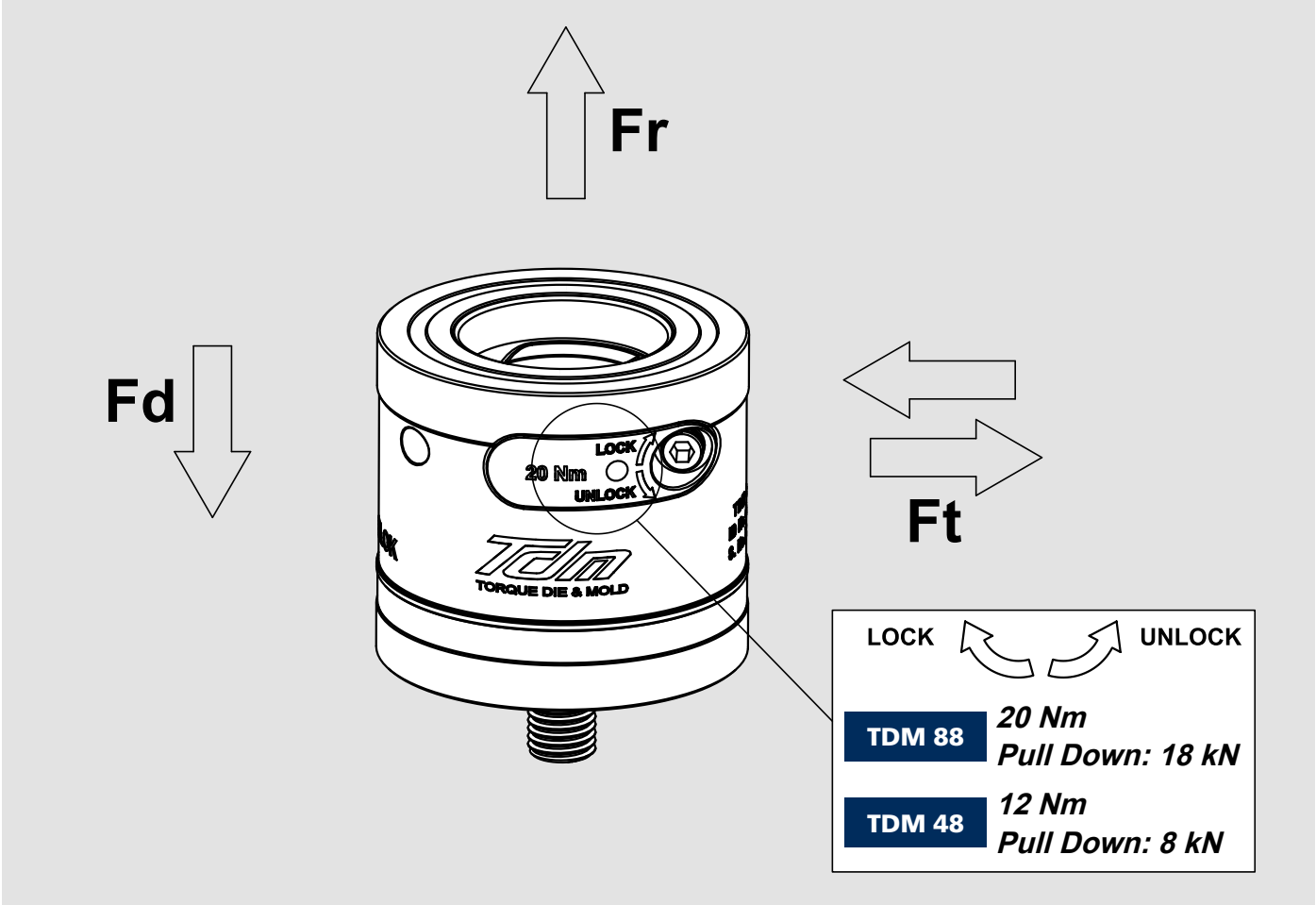

Standard and mini range workpiece preparation

Screw	Diameter Ø H6 (mm)	A	B (mm) Steel	B (mm) Cast Iron / Alloy
M6*	10 - 11	5	16	20
M6	10 - 11	6	16	20
M8*	12 - 14	5	20	27
M8	12 - 14 - 16	6	20	27
M10*	14 - 16	5	22	29
M10	14 - 16 - 18 - 20 - 22 - 24 - 25	6	22	29
M12	18 - 20 - 22 - 24 - 25	6	26	32
M16	22-24-25	6	32	40

* For TDM 48 range

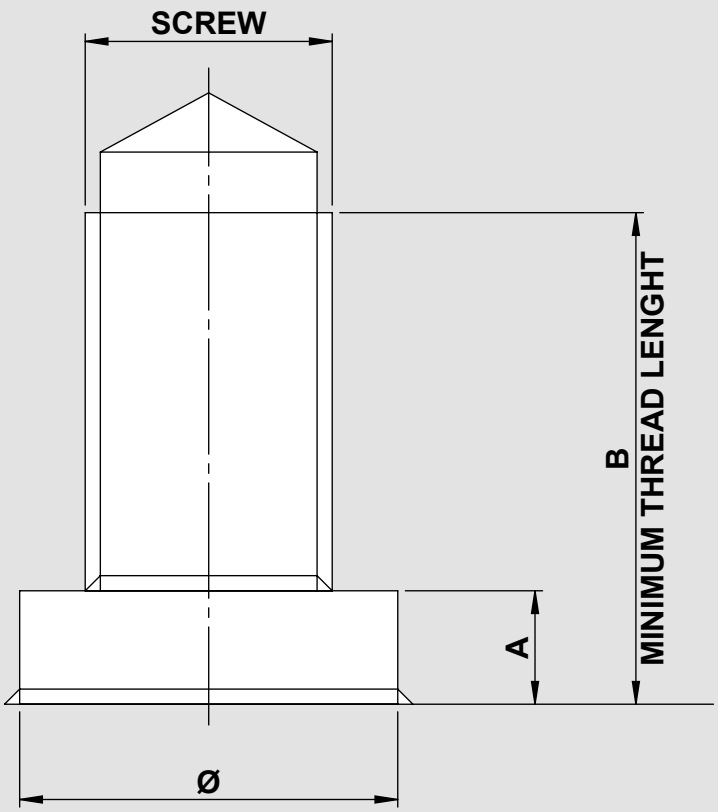

NOTES

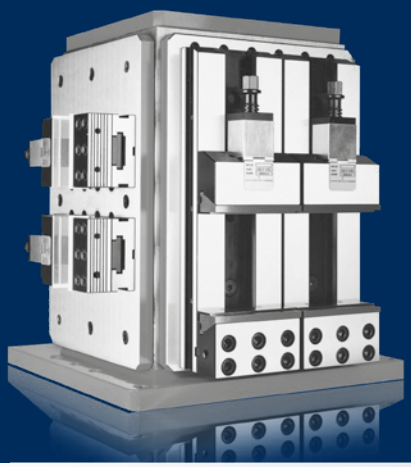

Modular Tombstone

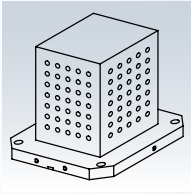

TOMBSTONE

Page 1.4

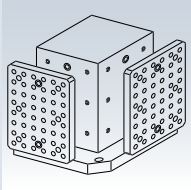

PLATES

Page 1.28

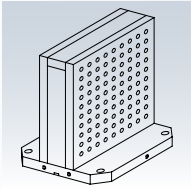

CRANKWEBS

Page 1.19

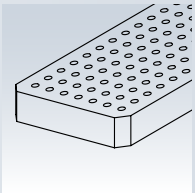

SUBPLATES

Page 1.30

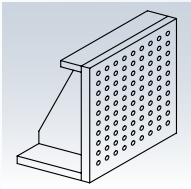

ANGLE PLATES

Page 1.24

Modular Tombstones

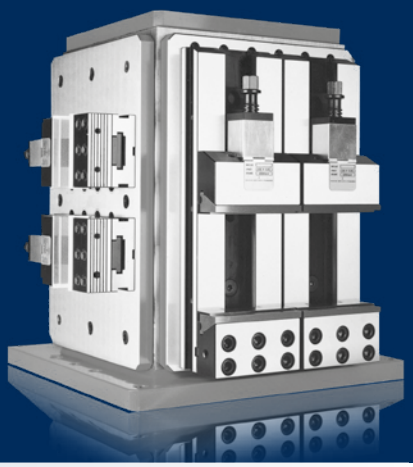

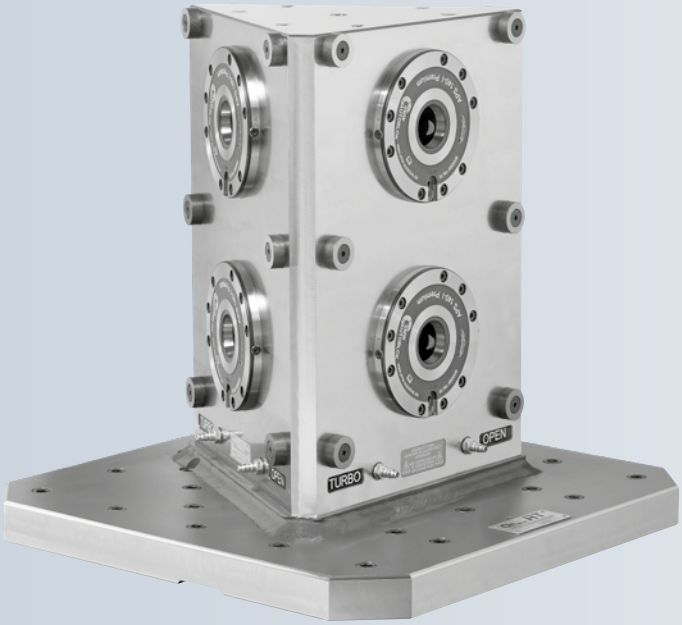

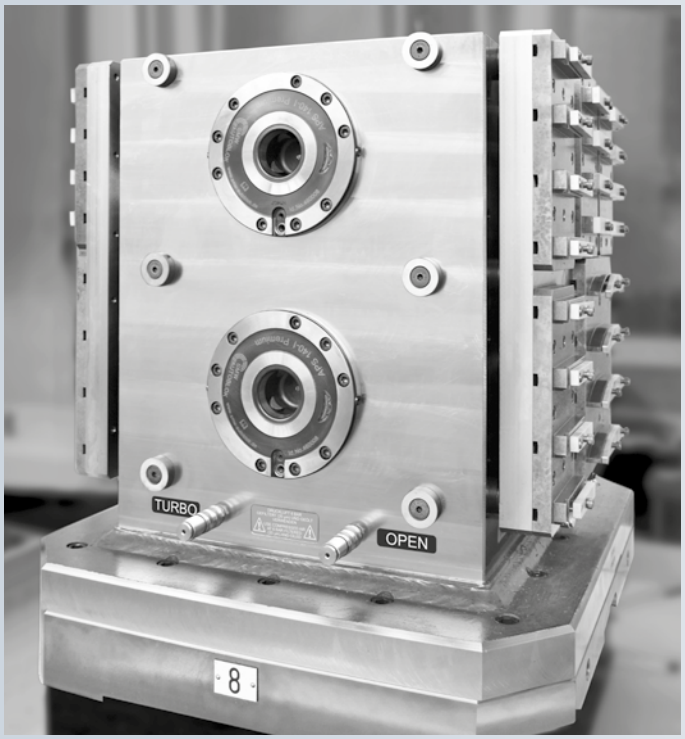

The tombstones are...

Milling and finish machining of the steel and aluminium tombstones are completed with high precision machines using the highest quality tools available.
This ensures the highest possible accuracy and outstanding dimensional repeatability.
All tombstones are quality controlled using a coordinate measuring machine.

STEEL
The steel tombstones are manufactured from high resistance steel plate (50/55,5 kg.mm2).
After welding, the steel is allowed a normalization period (800 degrees) in order to eliminate the inner stress.
After the milling and finish machining, the tombstones are painted and dried in an oven at 60 degrees.

ALUMINIUM
The aluminium version tombstones are casted using the latest generation materials (AlCu4TiMGka) maintaining a high resistance (HB 90-115). After the milling and finish machining, the tombstones are anodized (type EN 12373/1 ex UNI 4522-66) in order to avoid the wear and tear of the surfaces.

CAST IRON
Type UNI EN 1561 GJL - normalized at 500/550°C - High resistance HB 180-220

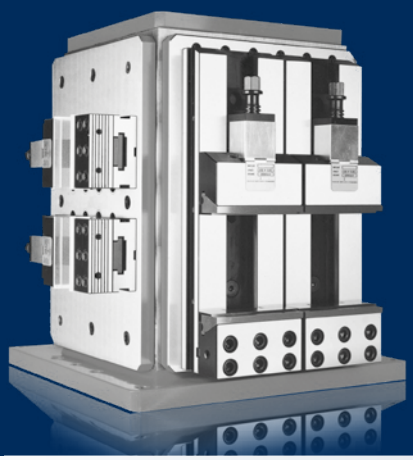

The advantages of modularity

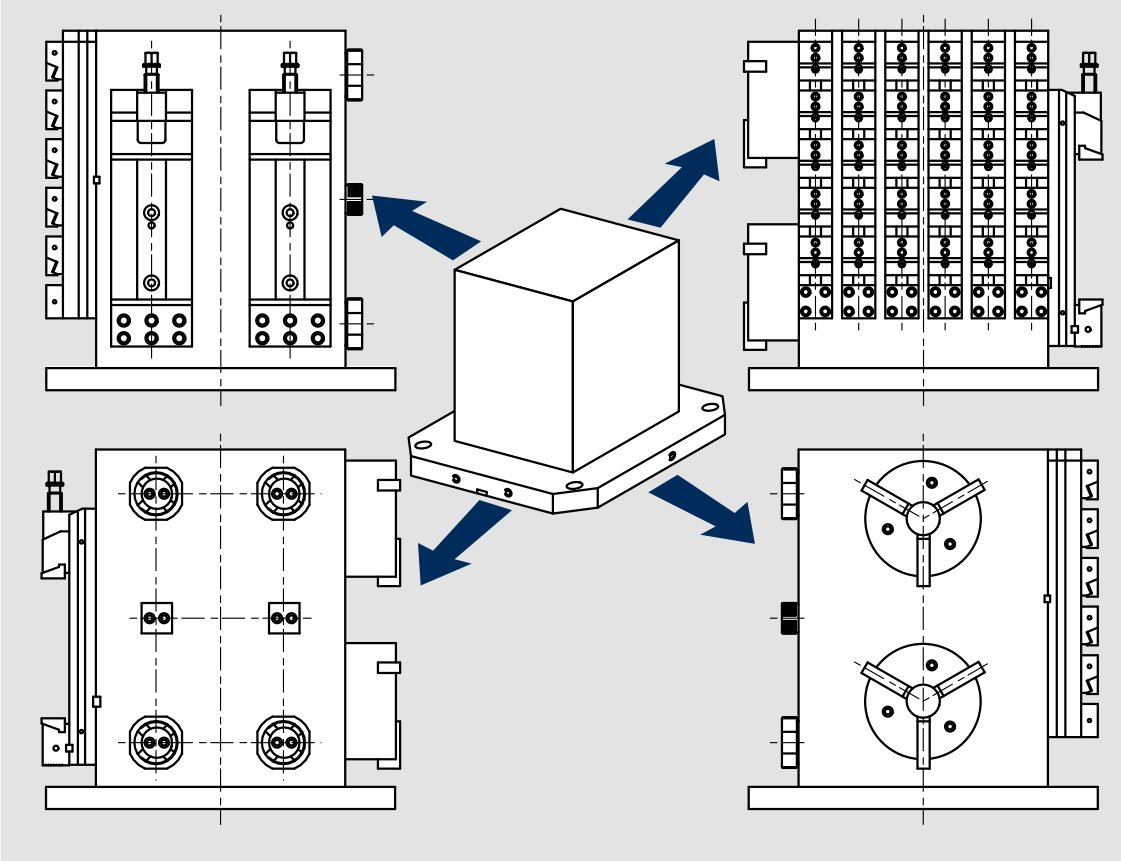

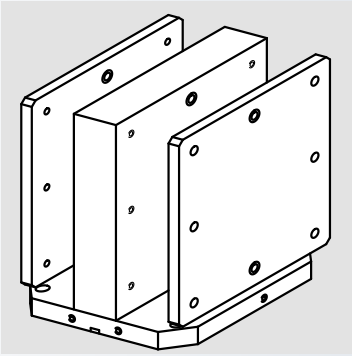

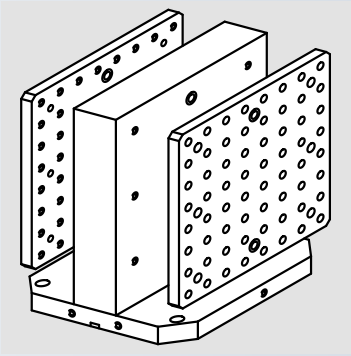

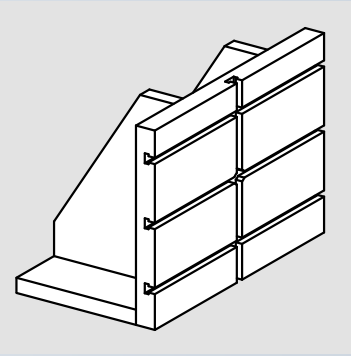

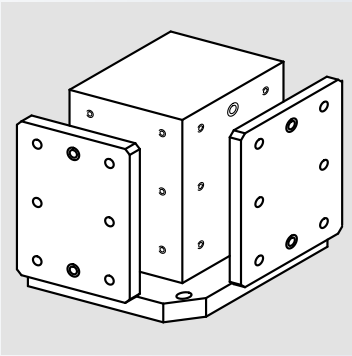

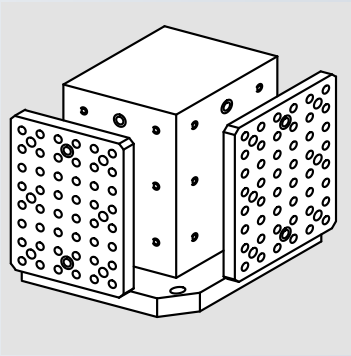

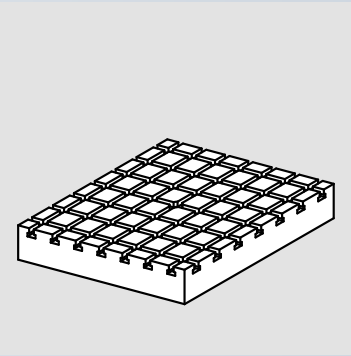

Modular Tombstone

Tombstones

■ Standard adaptation for machine tools pallet

Our products (tombstones, crankwebs) are supplied standard with the base machined to the table of the machine tool as follows.

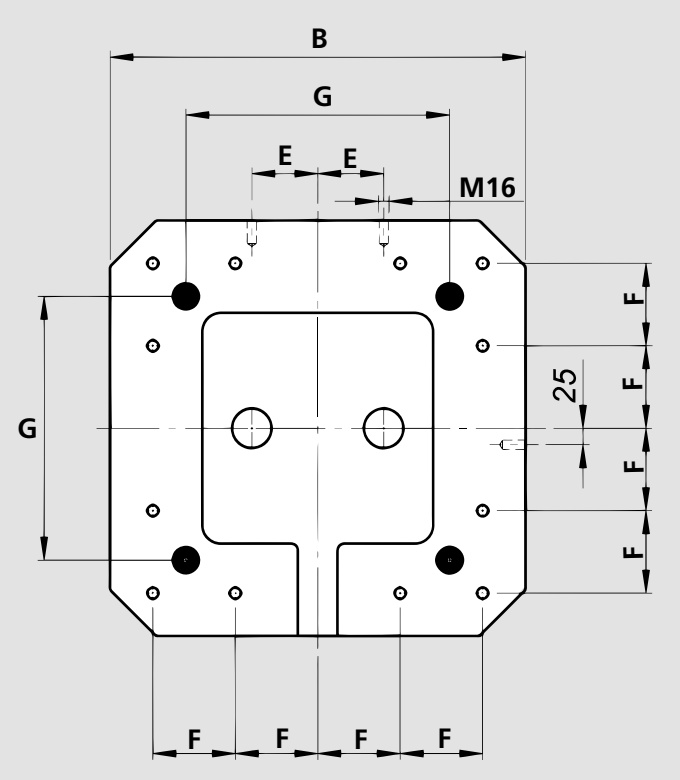

B mm	E mm	F mm	G mm
300	on request	on request	on request
400	55	80	250
500	75	100	250
630	100	125	420
800	135	160	420

Manufacturing tolerances

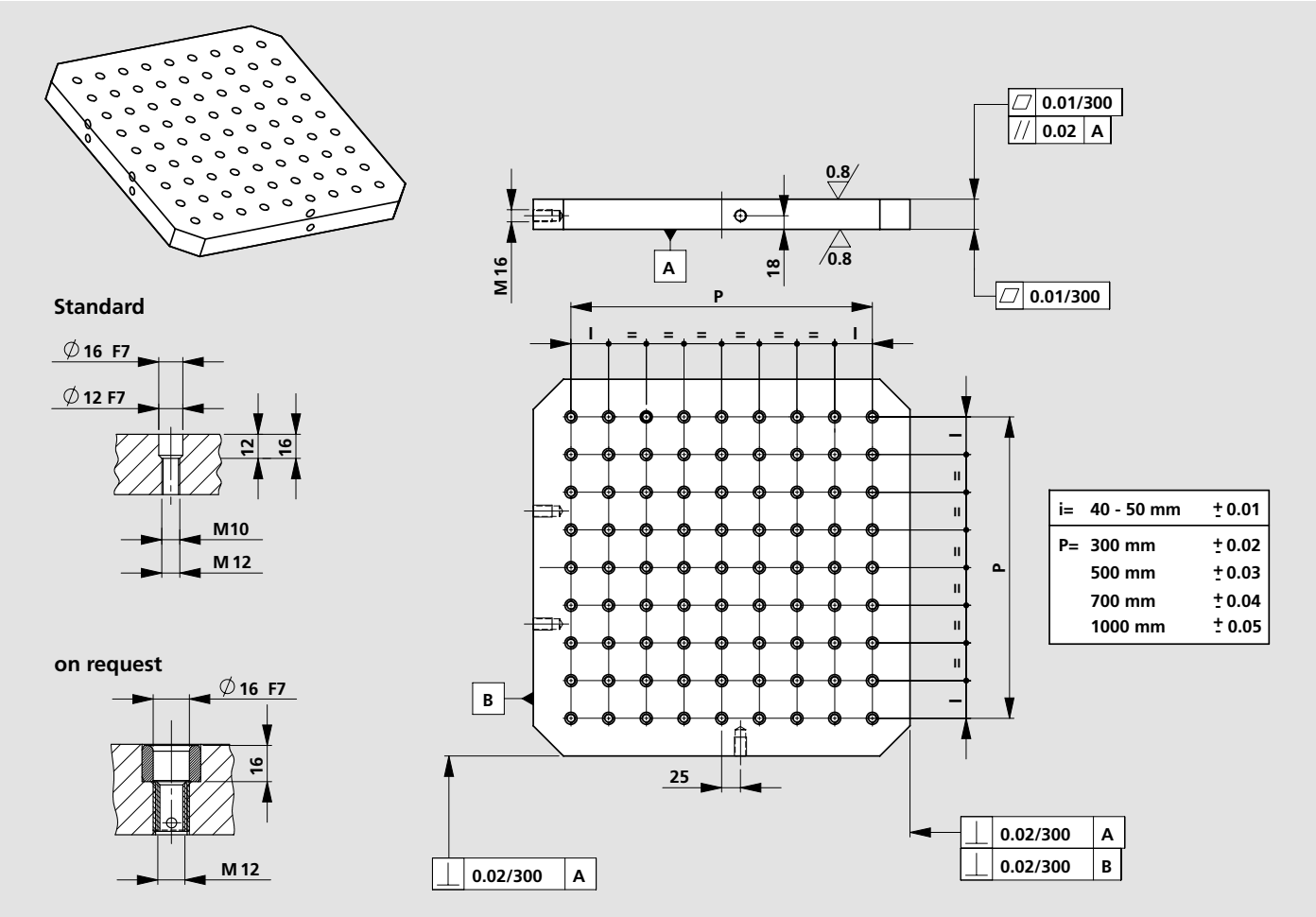

Modular Tombstone

Tombstones only milled finished

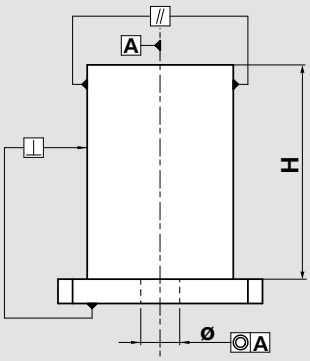

H	⊥	//	◎
500 mm	0.020	0.020	0.020
1000 mm	0.035	0.035	0.035

Tombstones for plates

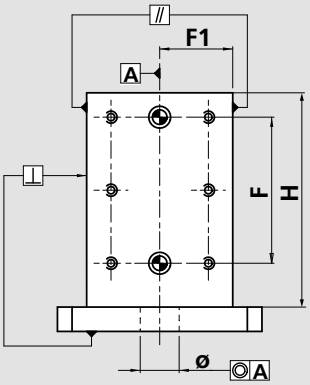

H	⊥	//	◎
500 mm	0.020	0.020	0.020
1000 mm	0.035	0.035	0.035

F=	300 mm	± 0.02
	500 mm	± 0.03
	700 mm	± 0.04
F1=	500 mm	± 0.015
	1000 mm	± 0.025

Tombstones with grid

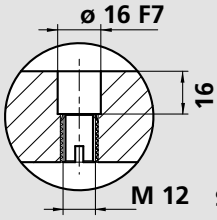

Standard for CAST IRON

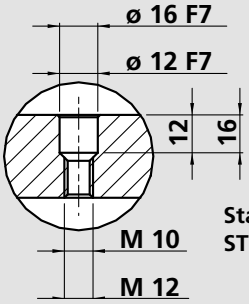

Standard for STEEL AND ALUMINIUM

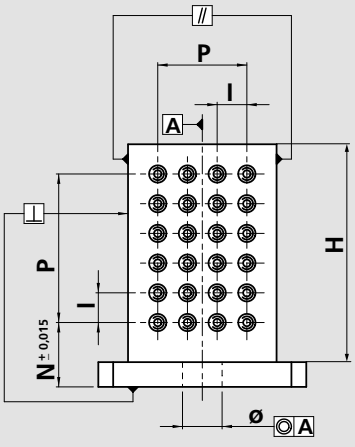

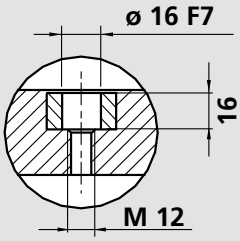

Special on request only for ALUMINIUM

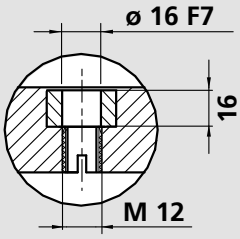

Special on request only for CAST IRON

H	⊥	//	◎
500 mm	0.020	0.020	0.020
1000 mm	0.035	0.035	0.035

i=	40 - 50 mm	± 0.01
P=	300 mm	± 0.02
	500 mm	± 0.03
	700 mm	± 0.04
	1000 mm	± 0.05

Modular Tombstone

Tombstones milled

- Steel, aluminium or cast iron
- Rough or finished

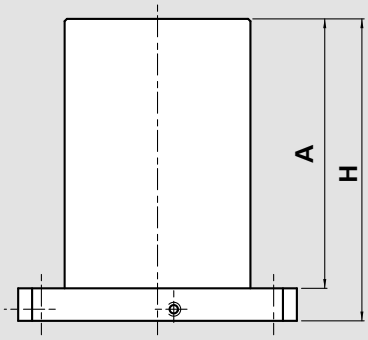

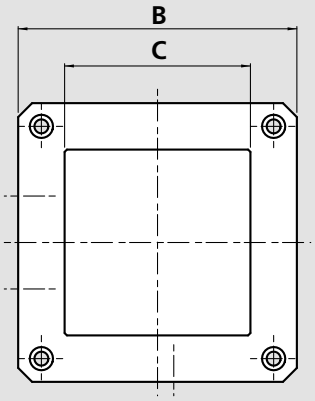

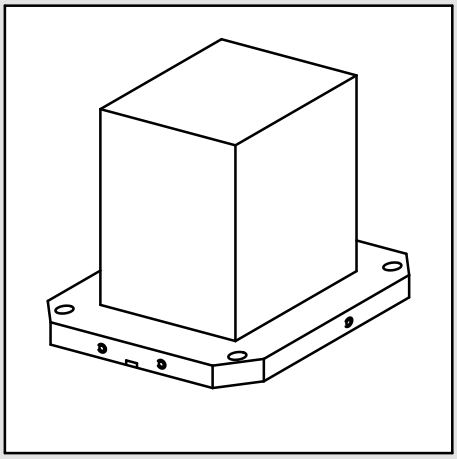

STEEL

Rough Id. No	Finished Id. No	A mm	B mm	C mm	H mm	Weight kg
57006006	57006005	415	300	160	455	81
57006036	57006035	620	400	250	660	205
57006056	57006055	660	500	350	700	318
57006091	57006090	815	630	450	860	524
57006121	57006120	945	800	550	1000	795

ALUMINIUM

Id. No	A mm	B mm	C mm	H mm	Weight kg
57306035	620	400	250	660	80
57306055	660	500	350	700	137
57306090	815	630	450	860	253

CAST IRON

Rough Id. No	Finished Id. No	A mm	B mm	C mm	H mm	Weight kg
57406036	57406035	615	400	250	660	208
57406056	57406055	655	500	350	700	329
57406091	57406090	810	630	450	860	607
57406121	57406120	945	800	550	1000	808

Special sizes on request.

Tombstones for plates

- Steel, aluminium or cast iron
- With grid holes for plates

Modular Tombstone

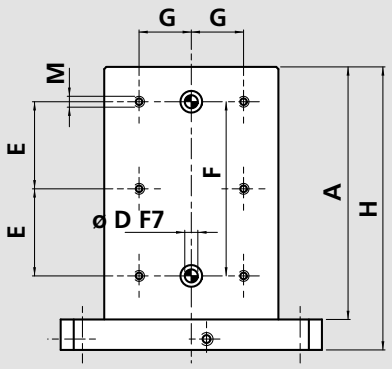

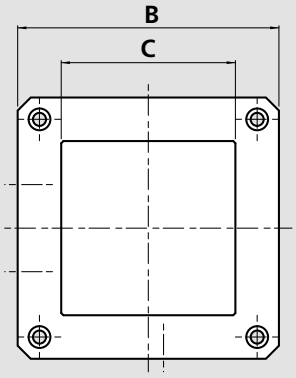

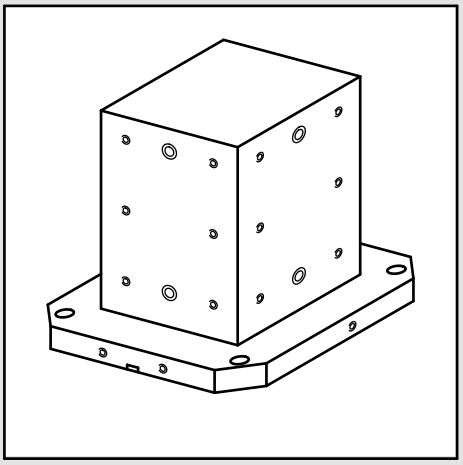

STEEL

Id. No	A mm	B mm	C mm	H mm	Ø D mm	M	E mm	F mm	G mm	Weight kg
57020015	415	300	160	455	12	M 10	150	300	40	81
57020045	620	400	250	660	16	M 12	250	500	75	205
57020065	660	500	350	700	16	M 12	250	500	125	318
57020100	815	630	450	860	16	M 12	350	700	175	524
57020130	945	800	550	1000	16	M 12	400	800	225	795

ALUMINIUM

Id. No	A mm	B mm	C mm	H mm	Ø D mm	M	E mm	F mm	G mm	Weight kg
57312045	620	400	250	660	16	M 12	250	500	75	80
57312065	660	500	350	700	16	M 12	250	500	125	137
57312100	815	630	450	860	16	M 12	350	700	175	253

CAST IRON

Id. No	A mm	B mm	C mm	H mm	Ø D mm	M	E mm	F mm	G mm	Weight kg
57412045	615	400	250	660	16	M 12	250	500	75	208
57412065	655	500	350	700	16	M 12	250	500	125	329
57412100	810	630	450	860	16	M 12	350	700	175	607
57412130	945	800	550	1000	16	M 12	400	800	225	808

Special sizes on request.

Modular Tombstone

Tombstones with grid

- Steel, aluminium or cast iron
- With grid holes for plates

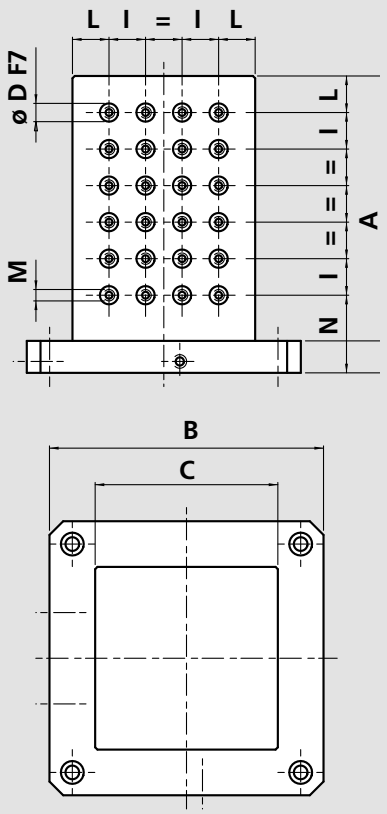

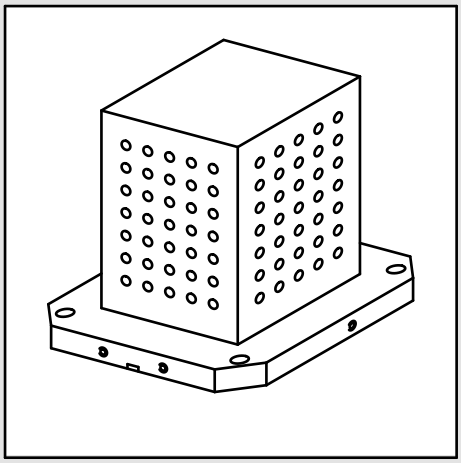

STEEL

Id. No.	A mm	B mm	C mm	H mm	Ø D mm	M	I mm	L mm	N mm	Weight Kg
57030015	415	300	160	455	12	M 10	40	40	95	79
57030045	620	400	250	660	16	M 12	50	50	110	198
57030065	660	500	350	700	16	M 12	50	50	100	307
57030100	815	630	450	860	16	M 12	50	50	110	506
57030130	945	800	550	1000	16	M 12	50	50	100	768

ALUMINIUM

Id. No.	A mm	B mm	C mm	H mm	Ø D mm	M	I mm	L mm	N mm	Weight Kg
57313045	620	400	250	660	16	M 12	50	50	110	78
57313065	660	500	350	700	16	M 12	50	50	100	133
57313100	815	630	450	860	16	M 12	50	50	110	246

CAST IRON

Id. No.	A mm	B mm	C mm	H mm	Ø D mm	M	I mm	L mm	N mm	Weight Kg
57413045	615	400	250	660	16	M 12	50	50	110	208
57413065	655	500	350	700	16	M 12	50	50	100	329
57413100	810	630	450	860	16	M 12	50	50	110	522
57413130	945	800	550	1000	16	M 12	50	50	100	808

Special sizes on request.

Rectangular tombstones only milled

■ Steel

Modular Tombstone

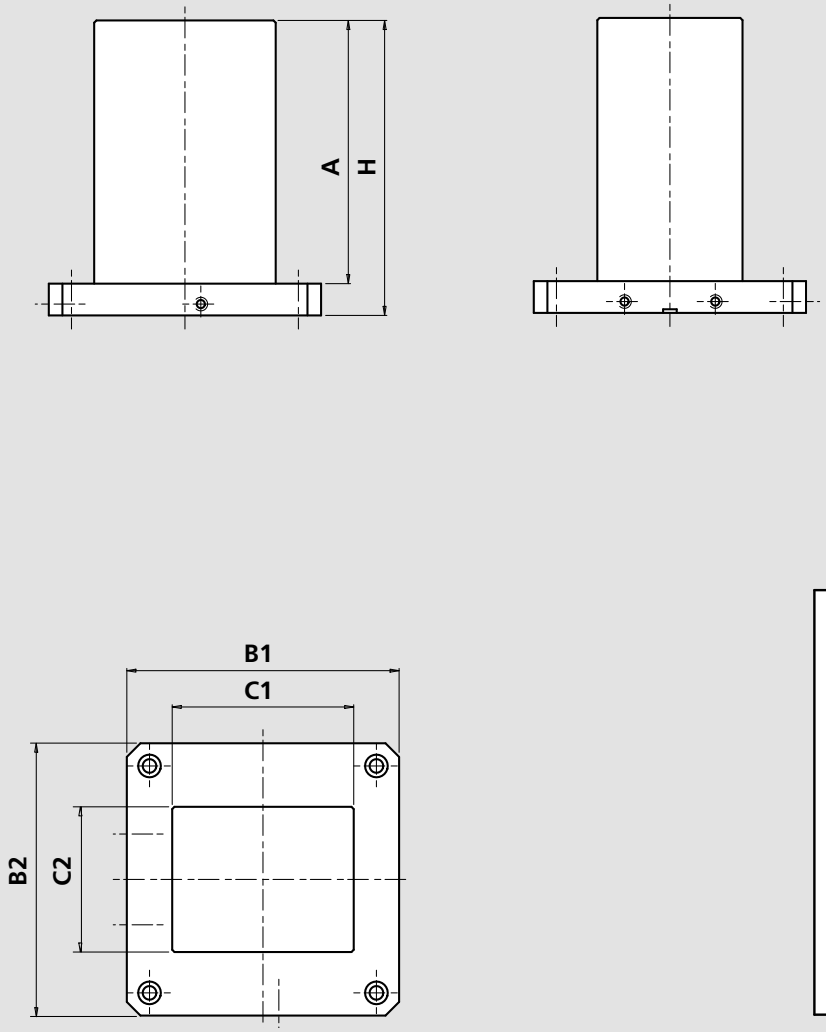

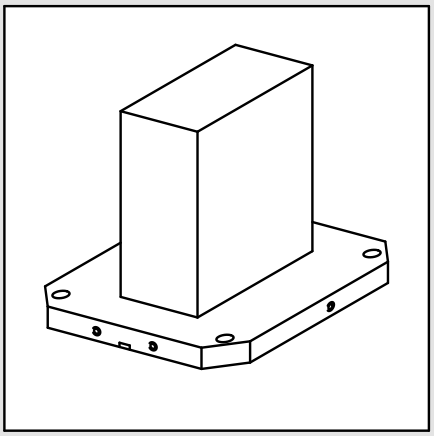

STEEL

Id. No.	A	B1	B2	C1	C2	H	Weight
	mm	mm	mm	mm	mm	mm	Kg
57007005	615	500	400	350	250	655	250
57007010	615	500	500	350	250	655	265
57007025	615	630	500	450	350	660	367
57007030	615	630	630	450	350	660	395

Special sizes on request.

Modular Tombstone

Rectangular tombstones for plates

- Steel
- With grid holes for plates

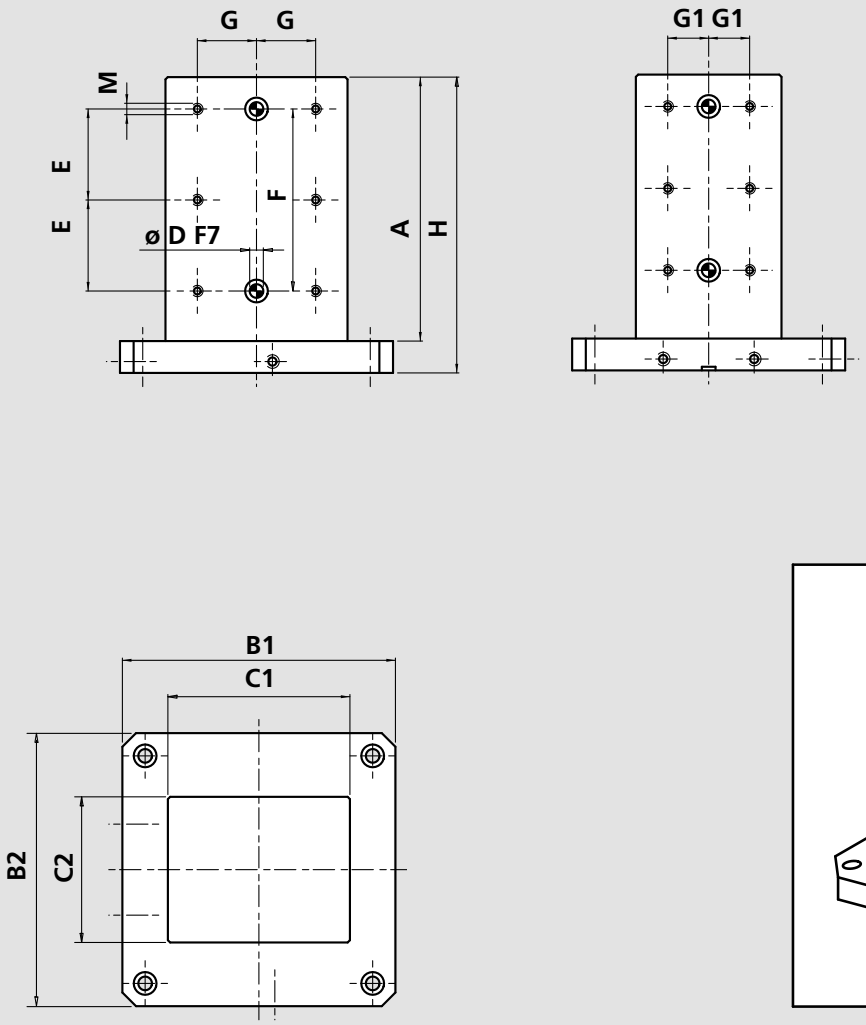

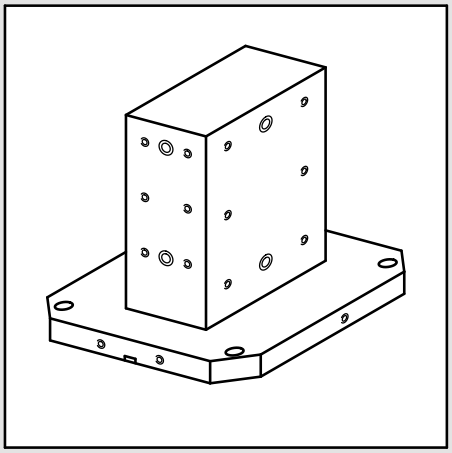

STEEL

Id. No.	A mm	B1 mm	B2 mm	C1 mm	C2 mm	H mm	Ø D mm	M	E mm	F mm	G mm	G1 mm	Weight kg
57070015	615	500	400	350	250	655	16	M 12	250	500	125	75	250
57070020	615	500	500	350	250	655	16	M 12	250	500	125	75	265
57070035	615	630	500	450	350	660	16	M 12	250	500	175	125	367
57070040	615	630	630	450	350	660	16	M 12	250	500	175	125	395

Special sizes on request.

Rectangular tombstones with grid

- Steel
- With grid holes for plates

Modular Tombstone

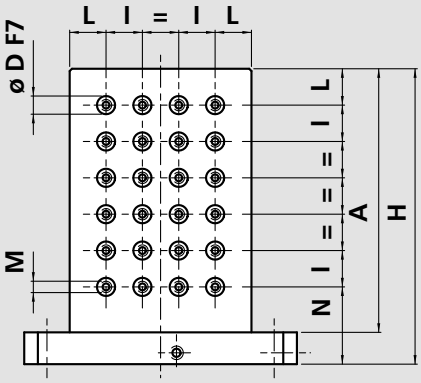

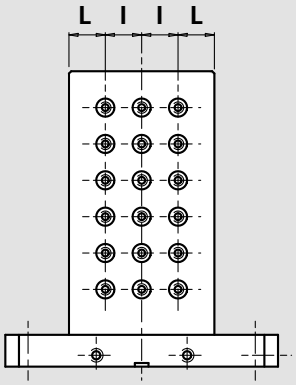

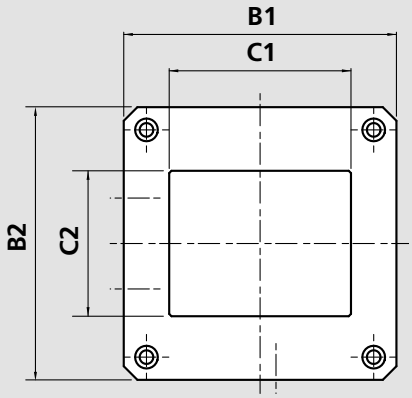

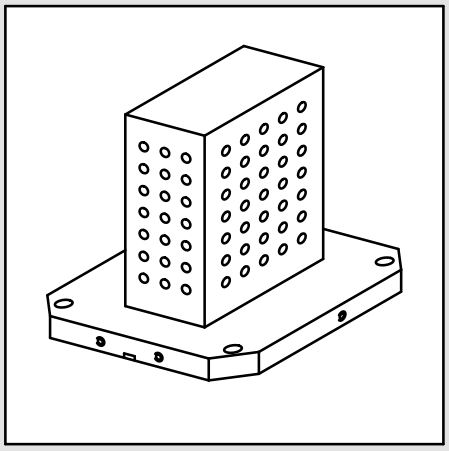

STEEL

Id. No.	A	B1	B2	C1	C2	H	Ø D	M	I	L	N	Weight
	mm	mm	mm	mm	mm	mm	mm		mm	mm	mm	kg
57080015	615	500	400	350	250	655	16	M 12	50	50	105	242
57080020	615	500	500	350	250	655	16	M 12	50	50	105	257
57080035	615	630	500	450	350	660	16	M 12	50	50	110	355
57080040	615	630	630	450	350	660	16	M 12	50	50	110	383

Special sizes on request.

Modular Tombstone

Cross tombstones only milled

■ Steel or aluminium

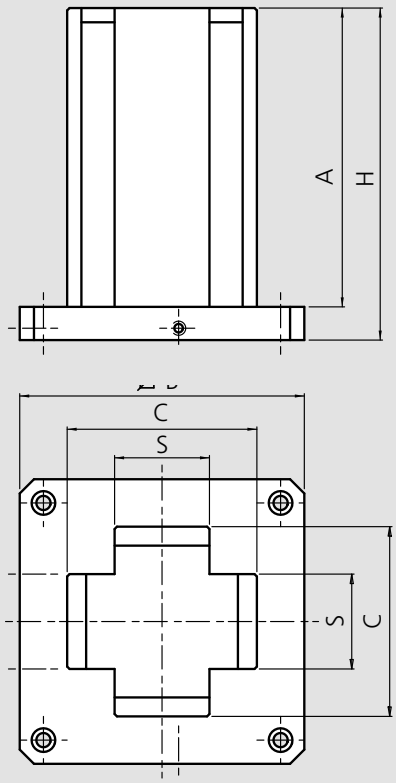

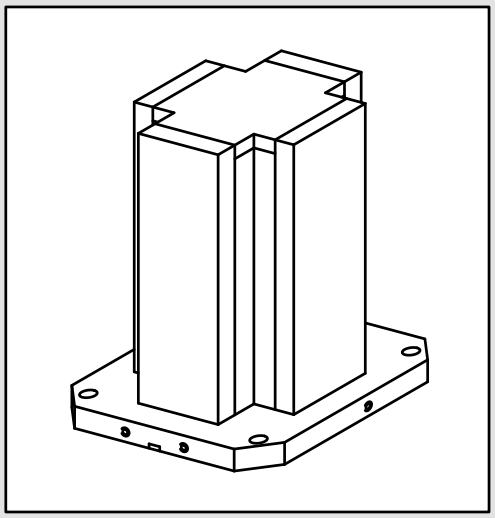

STEEL

Id. No.	A mm	B mm	C mm	H mm	S mm	Weight kg
57061010	540	400	300	580	150	208
57061015	540	500	300	580	150	236
57061020	795	630	550	840	150	451
57061025	625	500	350	670	200	296
57061030	625	630	350	670	200	356
57061035	650	400	250	690	100	142
57061040	650	500	300	690	100	187

ALUMINIUM

Id. No.	A mm	B mm	C mm	H mm	S mm	Weight kg
57316110	540	400	300	580	150	82
57316115	540	500	300	580	150	92
57316135	650	400	250	690	100	79
57316140	650	500	250	690	100	88

Special sizes on request.

Cross tombstones with grid

- Steel or aluminium
- With grid holes for plates

Modular Tombstone

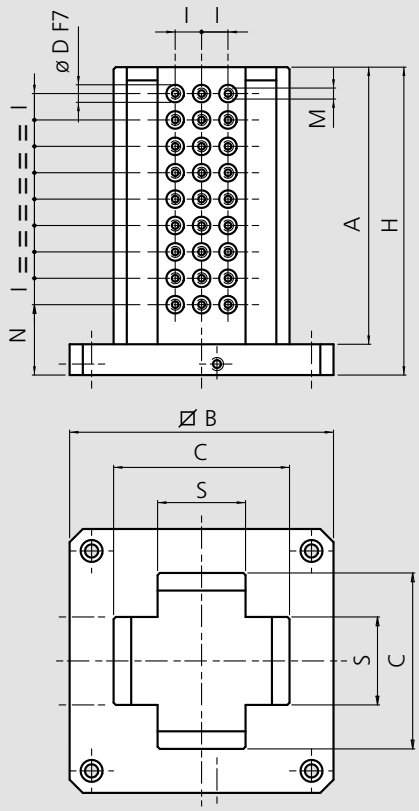

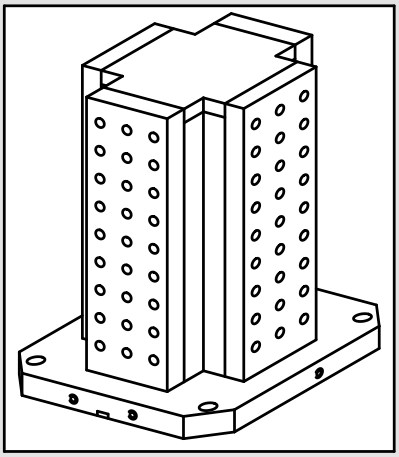

STEEL

Id. No.	A mm	B mm	C mm	H mm	Ø D mm	M	I mm	N mm	S mm	Weight kg
57060010	540	400	300	580	16	M12	50	85	150	208
57060015	540	500	300	580	16	M12	50	85	150	236
57060020	795	630	550	840	16	M12	50	100	150	451
57060025	625	500	350	670	16	M12	50	120	200	296
57060030	625	630	350	670	16	M12	50	120	200	356

ALUMINIUM

Id. No.	A mm	B mm	C mm	H mm	Ø D mm	M	I mm	N mm	S mm	Weight kg
57316010	540	400	300	580	16	M12	50	85	150	82
57316015	540	500	300	580	16	M12	50	85	150	92

Special sizes on request.

Modular Tombstone

Triangular tombstones with grid

- Steel
- With grid holes for plates

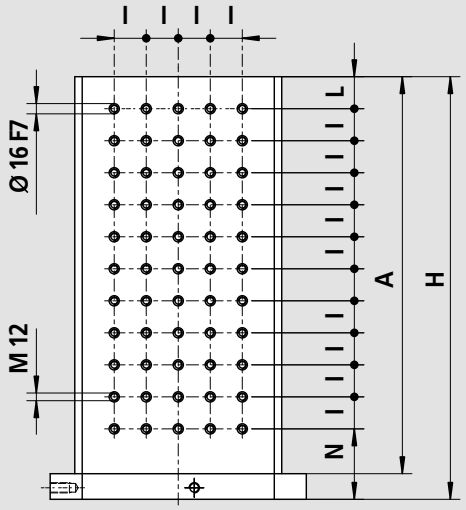

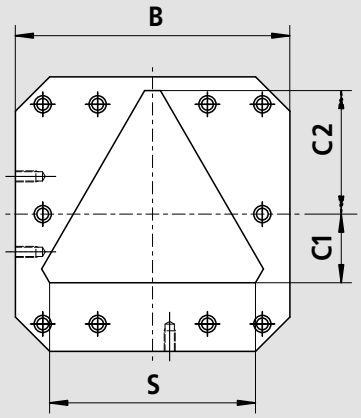

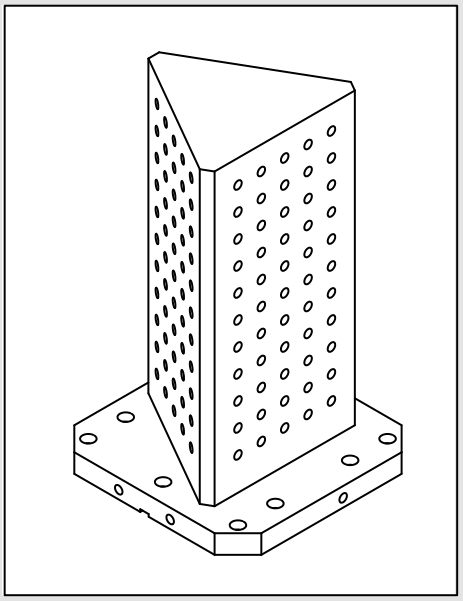

STEEL

Id. No.	A	B	C1	C2	H	I	L	N	S	Weight
	mm	mm	mm	mm	mm	mm	mm	mm	mm	kg
57171010	620	400	100	180	660	50	50	110	300	200
57171020	620	500	100	180	660	50	50	110	300	227

Special sizes on request.

Hexagonal tombstones only milled

■ Steel or aluminium

Modular Tombstone

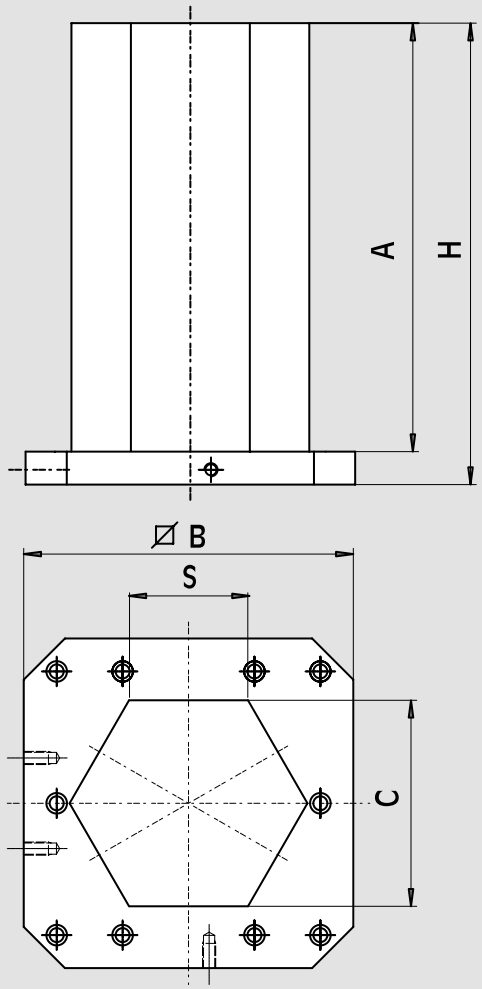

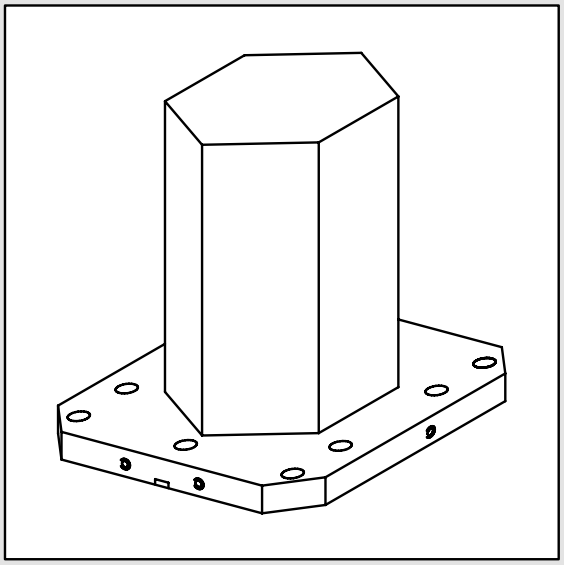

STEEL

Id. No.	A mm	B mm	C mm	H mm	S mm	Weight kg
57003000	650	400	250	690	140	191
57003010	650	500	250	690	140	220
57003020	650	630	380	690	215	361

ALUMINIUM

Id. No.	A mm	B mm	C mm	H mm	S mm	Weight kg
57303000	650	400	250	690	140	78
57303010	650	500	250	690	140	87
57303020	650	630	380	690	215	140

Special sizes on request.

Modular Tombstone

Hexagonal tombstones with grid

- Steel or aluminium
- With grid holes for plates

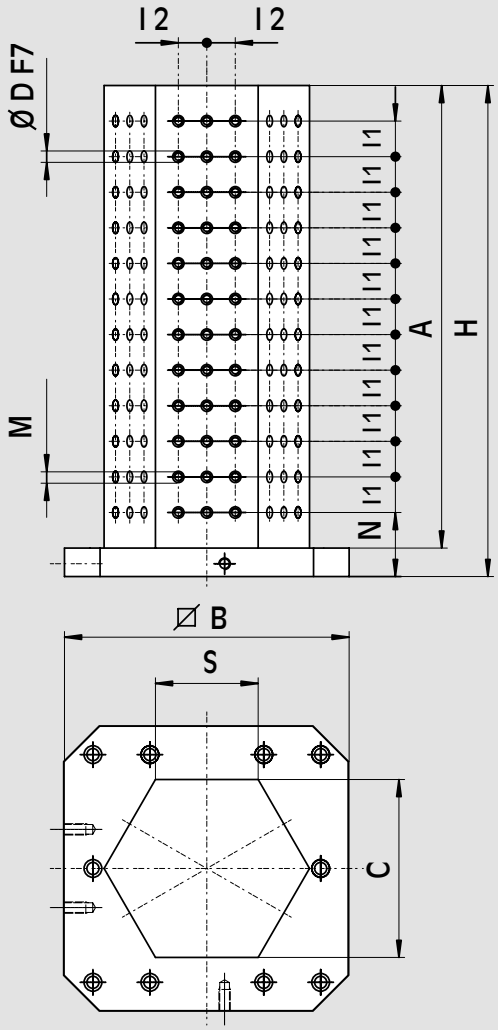

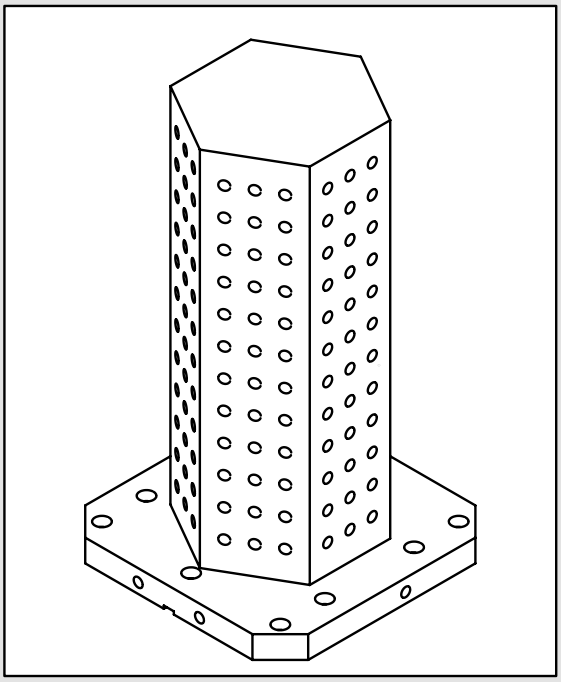

STEEL

Id. No.	A mm	B mm	C mm	H mm	Ø D mm	M	l 1 mm	l 2 mm	N mm	S mm	Weight kg
57172010	650	400	250	690	16	M 12	50	40	90	140	182
57172020	650	500	250	690	16	M 12	50	40	90	140	211
57172030	650	630	380	690	16	M 12	50	50	90	215	352

ALUMINIUM

Id. No.	A mm	B mm	C mm	H mm	Ø D mm	M	l 1 mm	l 2 mm	N mm	S mm	Weight kg
57335010	650	400	250	690	16	M 12	50	40	90	140	75
57335020	650	500	250	690	16	M 12	50	40	90	140	84
57335030	650	630	380	690	16	M 12	50	50	90	215	136

Special sizes on request.

Octagonal tombstones only milled

■ Steel or aluminium

Modular Tombstone

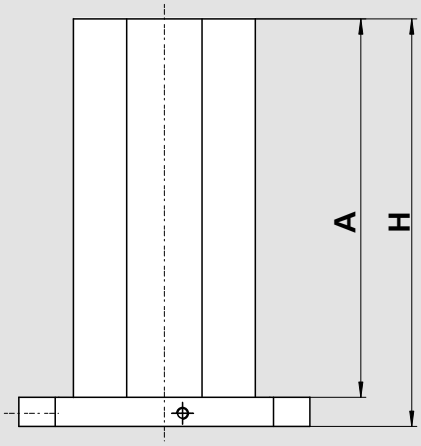

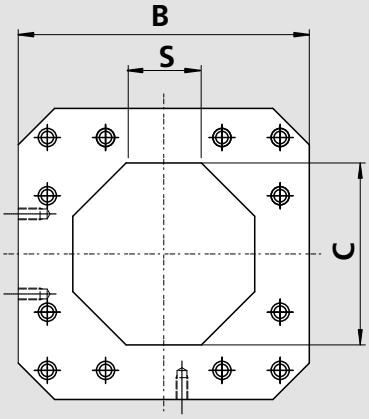

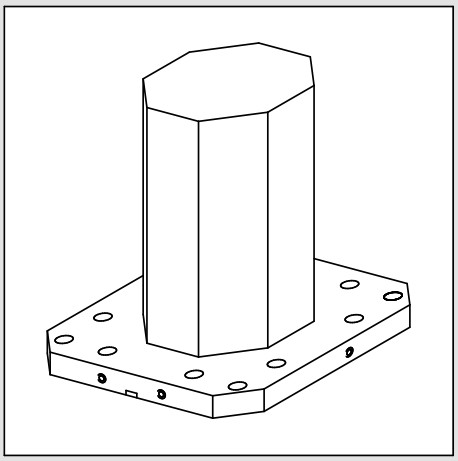

STEEL

Id. No.	A mm	B mm	C mm	H mm	S mm	Weight kg
57004000	650	400	250	690	100	185
57004010	650	500	250	690	100	213
57004020	650	630	380	690	155	351

ALUMINIUM

Id. No.	A mm	B mm	C mm	H mm	S mm	Weight kg
57304000	650	400	250	690	100	79
57304010	650	500	250	690	100	88
57304020	650	630	380	690	155	138

Special sizes on request.

Modular Tombstone

Octagonal tombstones with grid

- Steel or aluminium
- With grid holes for plates

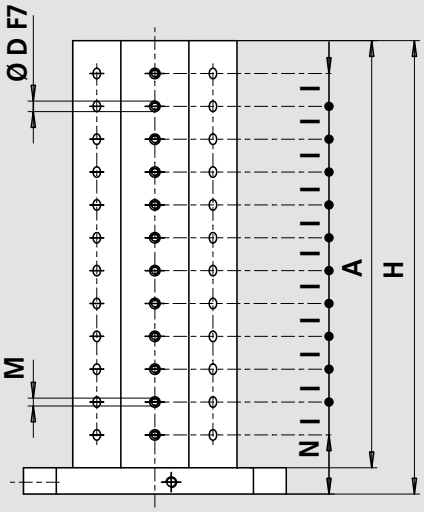

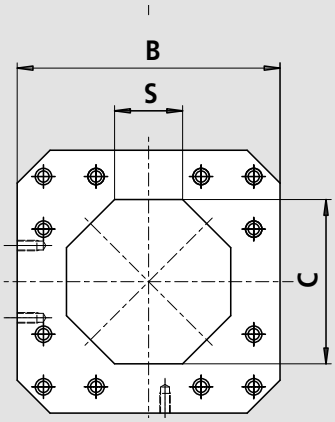

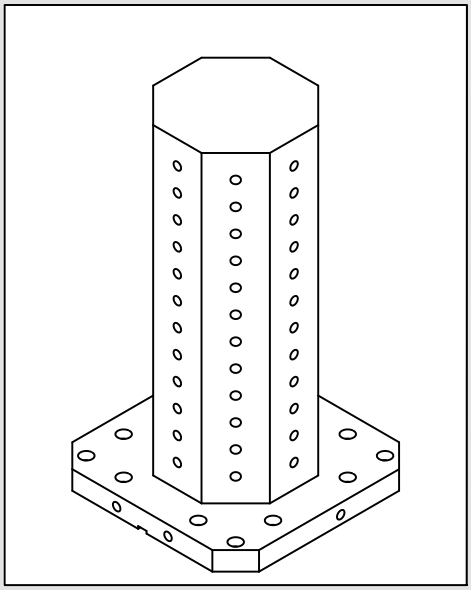

STEEL

Id. No.	A mm	B mm	C mm	H mm	Ø D mm	M	I mm	N mm	S mm	Weight kg
57173010	650	400	250	690	16	M 12	50	90	100	181
57173020	650	500	250	690	16	M 12	50	90	100	209
57173030	650	630	380	690	16	M 12	50	90	155	339

ALUMINIUM

Id. No.	A mm	B mm	C mm	H mm	Ø D mm	M	I mm	N mm	S mm	Weight kg
57336010	650	400	250	690	16	M 12	50	90	100	78
57336020	650	500	250	690	16	M 12	50	90	100	87
57336030	650	630	380	690	16	M 12	50	90	155	136

Special sizes on request.

Crankwebs milled

■ Steel, aluminium or cast iron

Modular Tombstone

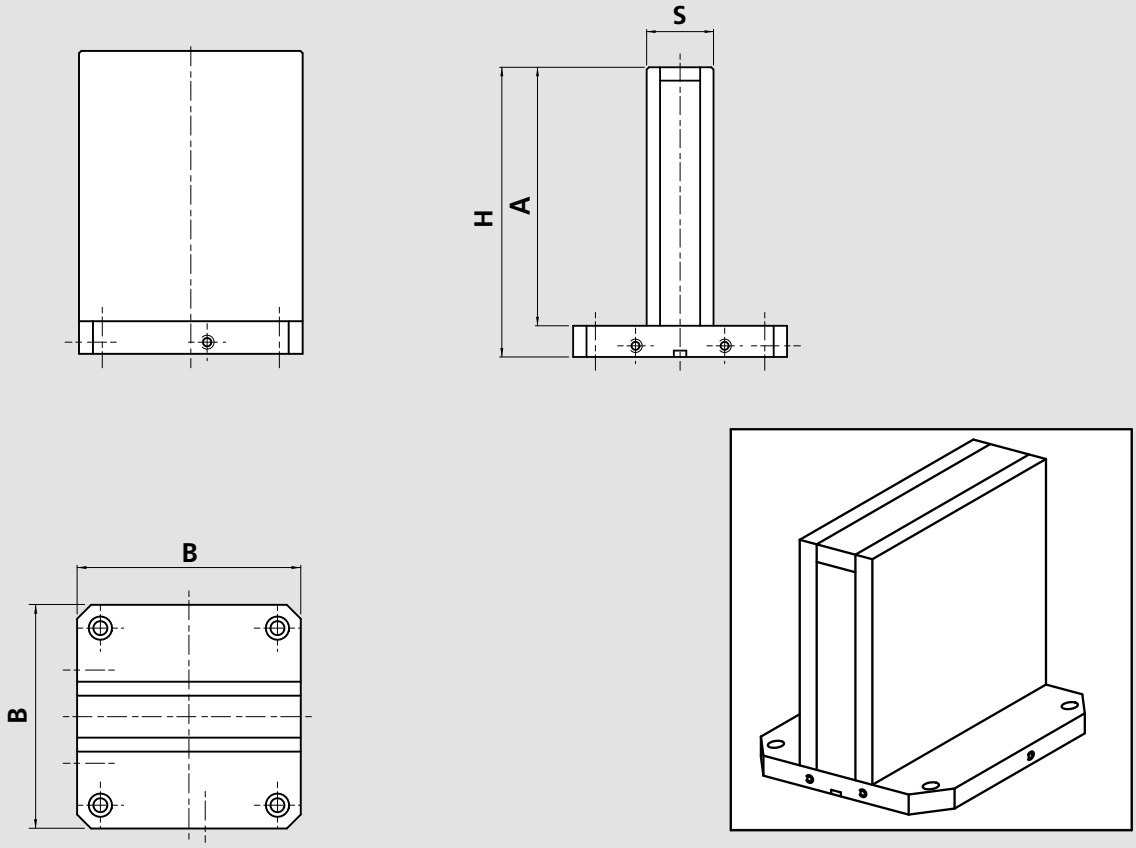

STEEL

Rough Id. No.	Finished Id. No.	A mm	B mm	H mm	S mm	Weight kg
57009026	57009025	620	400	660	150	212
57009046	57009045	660	500	700	150	287
57009066	57009065	815	630	860	200	482
57009091	57009090	945	800	1000	260	810

ALUMINIUM

Cod.	A mm	B mm	H mm	S mm	Weight kg
57309025	620	400	660	150	77
57309045	660	500	700	150	103
57309065	815	630	860	200	172

CAST IRON

Rough Id. No.	Finished Id. No.	A mm	B mm	H mm	S mm	Weight kg
57409026	57409025	615	400	660	150	185
57409046	57409045	655	500	700	150	247
57409066	57409065	810	630	860	200	448
57409091	57409090	945	800	1000	300	810

Special sizes on request.

Modular Tombstone

Crankwebs for plates

■ Steel, aluminium or cast iron

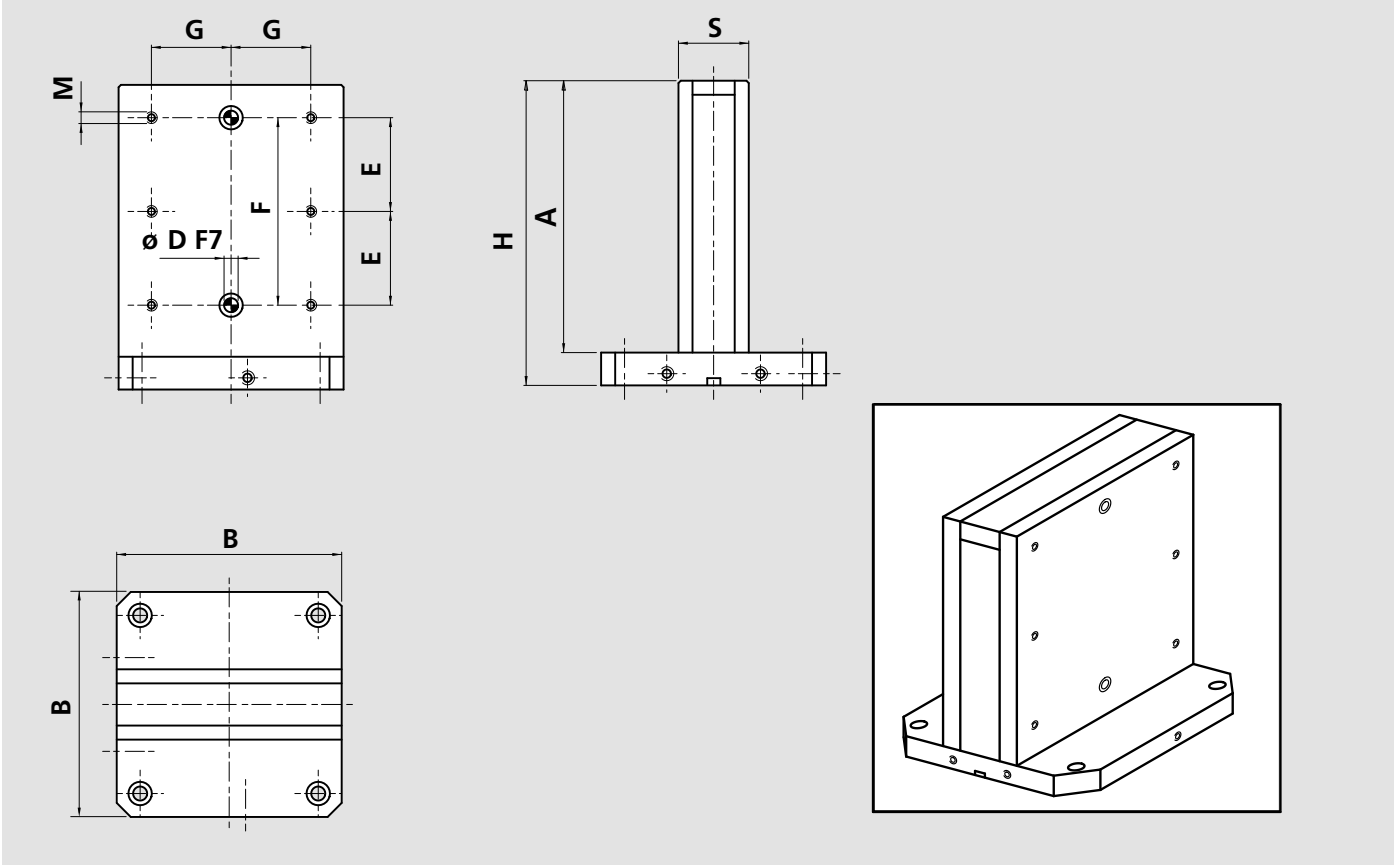

STEEL

Id. No.	A mm	B mm	H mm	Ø D mm	M	E mm	F mm	G mm	S mm	Weight kg
57041035	620	400	660	16	M 12	250	500	150	150	212
57041055	660	500	700	16	M 12	250	500	200	150	287
57041075	815	630	860	16	M 12	350	700	250	200	482
57041100	945	800	1000	16	M 12	100	800	350	260	810

ALUMINIUM

Id. No.	A mm	B mm	H mm	Ø D mm	M	E mm	F mm	G mm	S mm	Weight kg
57328035	620	400	660	16	M 12	250	500	150	150	77
57328055	660	500	700	16	M 12	250	500	200	150	103
57328075	815	630	860	16	M 12	350	700	250	200	180

CAST IRON

Id. No.	A mm	B mm	H mm	Ø D mm	M	E mm	F mm	G mm	S mm	Weight kg
57428035	615	400	660	16	M 12	250	500	150	150	185
57428055	655	500	700	16	M 12	250	500	200	150	247
57428075	810	630	860	16	M 12	350	700	250	200	448
57428100	945	800	1000	16	M 12	400	800	350	300	810

Special sizes on request.

Crankwebs with grid

- Steel, aluminium or cast iron
- With grid holes for plates

Modular Tombstone

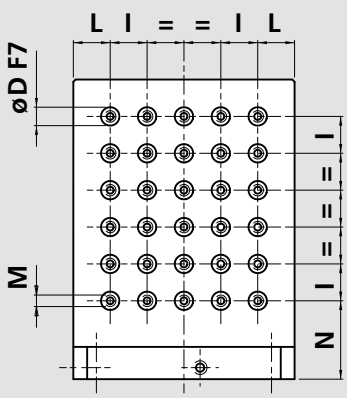

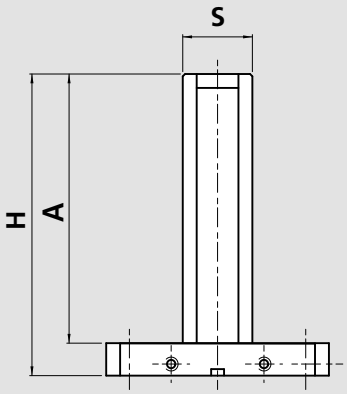

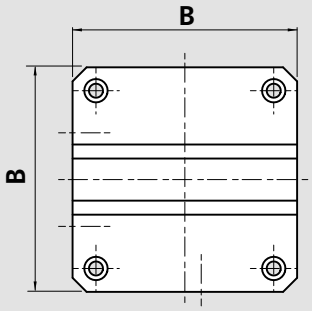

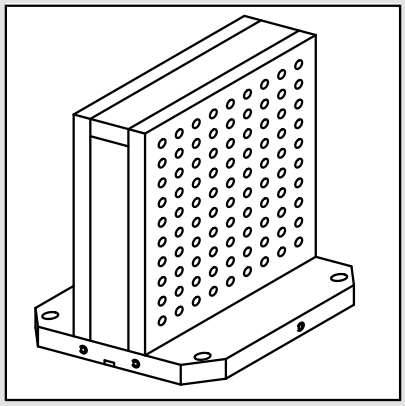

STEEL

Id. No.	A mm	B mm	H mm	Ø D mm	M	I mm	L mm	N mm	S mm	Weight kg
57040035	620	400	660	16	M 12	50	50	110	150	206
57040055	660	500	700	16	M 12	50	50	100	150	279
57040075	815	630	860	16	M 12	50	40	110	200	468
57040100	945	800	1000	16	M 12	50	50	100	260	787

ALUMINIUM

Id. No.	A mm	B mm	H mm	Ø D mm	M	I mm	L mm	N mm	S mm	Weight kg
57314035	620	400	660	16	M 12	50	50	110	150	74
57314055	660	500	700	16	M 12	50	50	100	150	100
57314075	815	630	860	16	M 12	50	40	110	200	170

CAST IRON

Id. No.	A mm	B mm	H mm	Ø D mm	M	I mm	L mm	N mm	S mm	Weight kg
57414035	615	400	660	16	M 12	50	50	110	150	180
57414055	655	500	700	16	M 12	50	50	100	150	240
57414075	810	630	860	16	M 12	50	40	110	200	440
57414100	945	800	1000	16	M 12	50	50	100	300	790

Special sizes on request.

Modular Tombstone

Full crankwebs only milled

■ Steel or aluminium

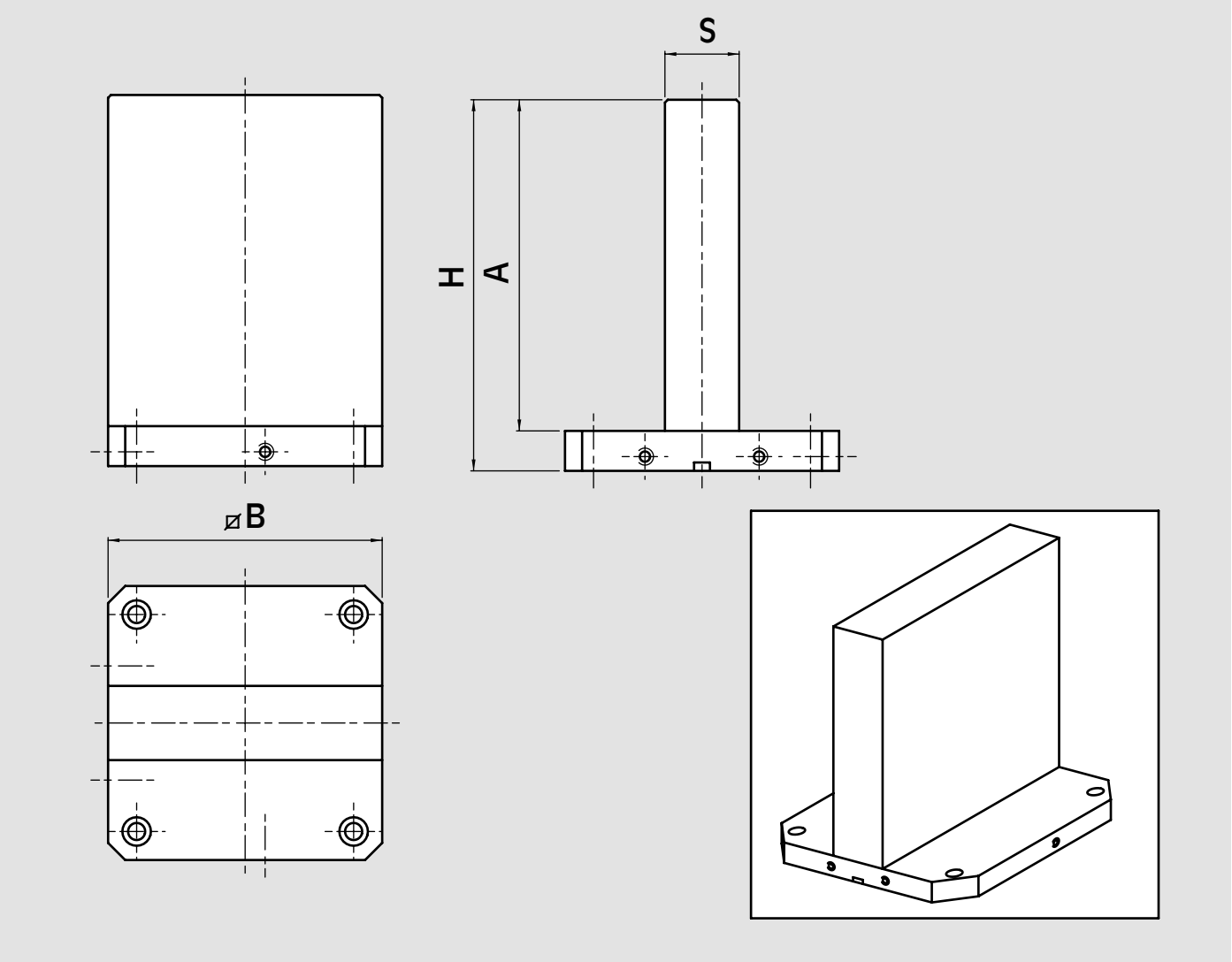

STEEL

Id. No.	A mm	B mm	H mm	S mm	Weight kg
57008030	370	320	410	80	107
57008040	480	400	520	100	201
57008050	580	500	620	100	306

ALUMINIUM

Id. No.	A mm	B mm	H mm	S mm	Weight kg
57308020	270	250	310	80	23

Special sizes on request.

Full crankwebs for plates

Modular Tombstone

■ Steel or aluminium

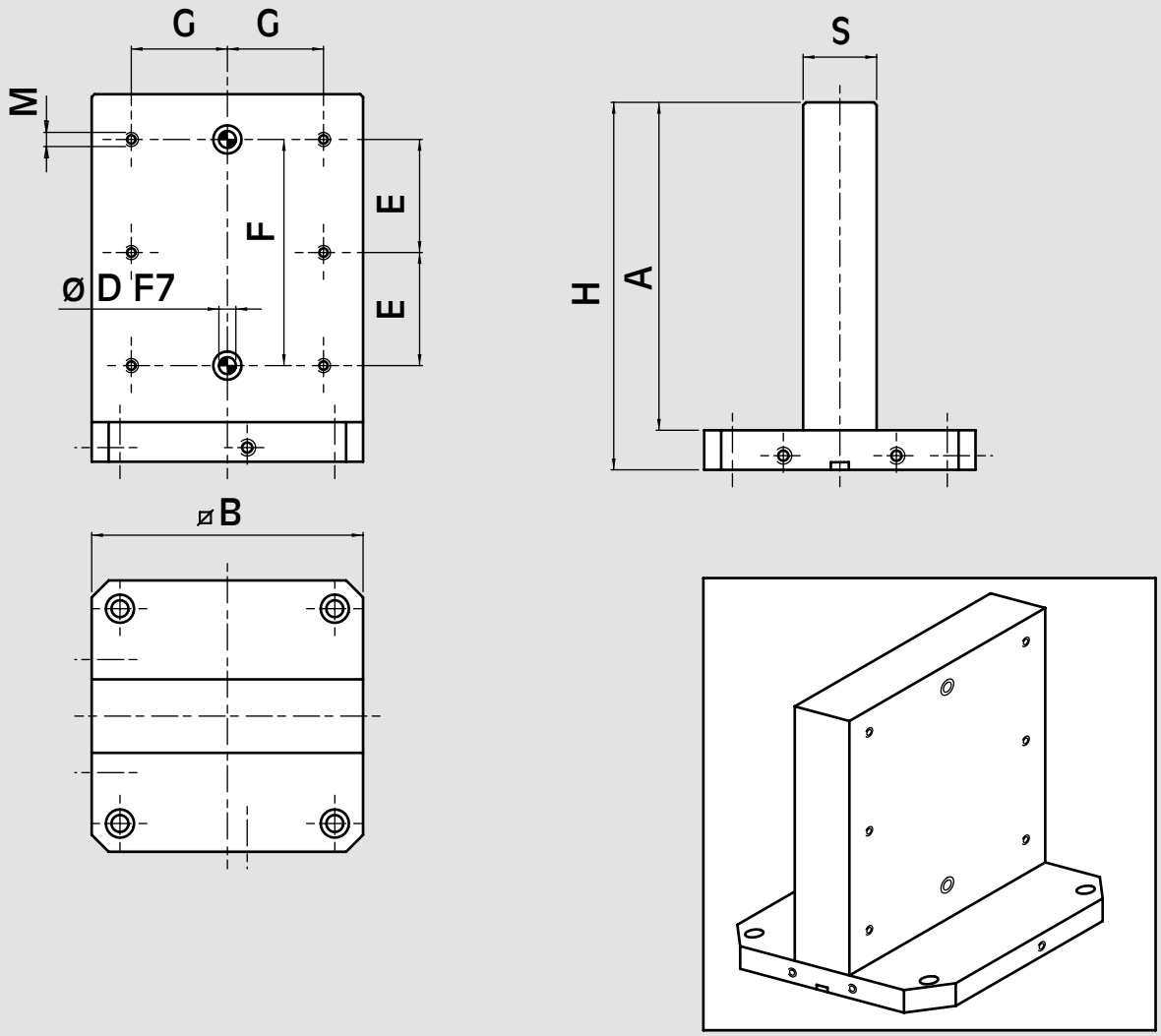

STEEL

Id. No.	A mm	B mm	Ø D mm	M	E mm	F mm	G mm	H mm	S mm	Weight kg
57090040	370	320	16	M 12	125	250	110	410	80	107
57090050	480	400	16	M 12	175	350	150	520	100	201
57090060	580	500	16	M 12	225	450	200	620	100	306

ALUMINIUM

Id. No.	A mm	B mm	Ø D mm	M	E mm	F mm	G mm	H mm	S mm	Weight kg
57319030	270	250	16	M 12	75	150	75	310	80	23

Special sizes on request.

Modular Tombstone

Angle plates only milled

■ Steel

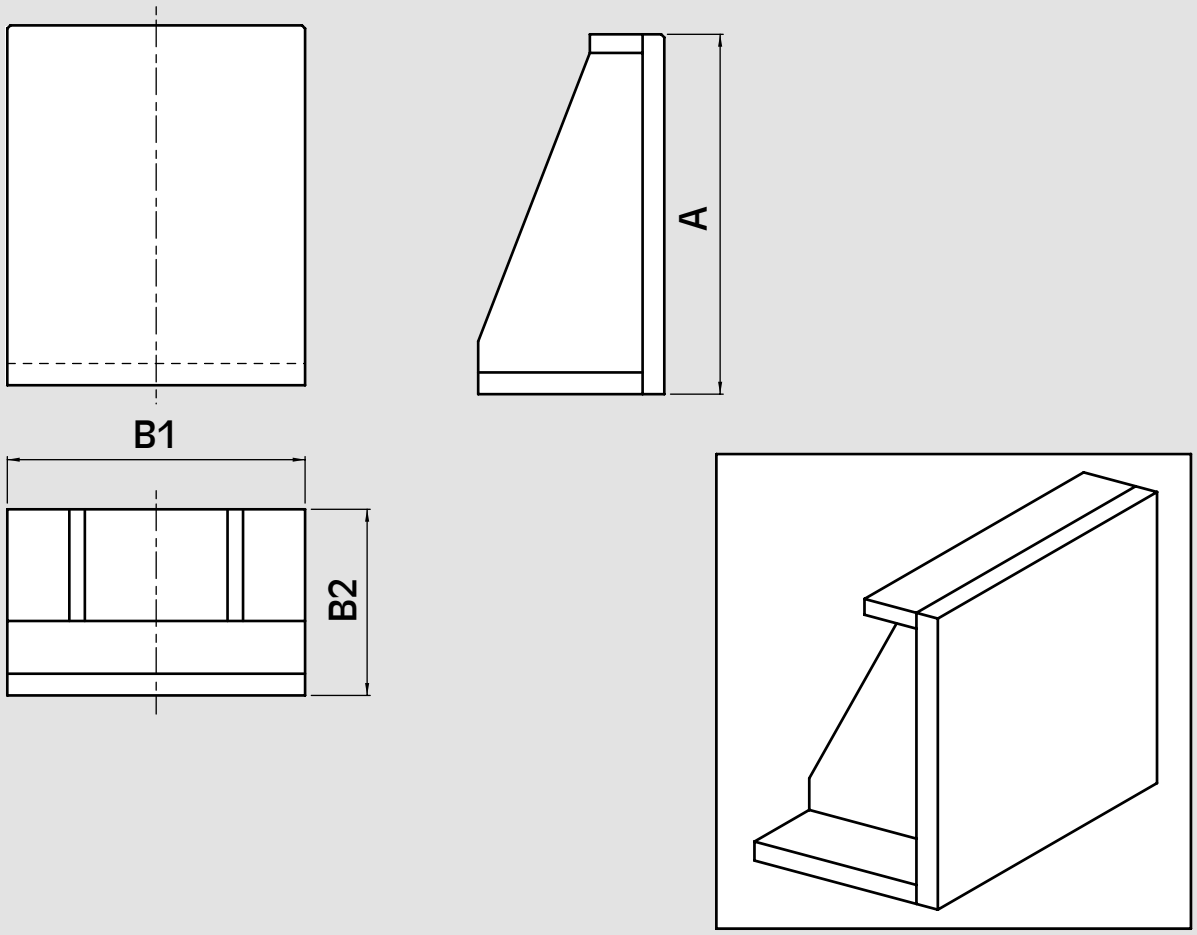

STEEL

Id. No.	A mm	A mm	A mm	Weight kg
57005030	360	320	230	66
57005040	460	400	330	130
57005050	510	400	330	139
57005060	510	500	330	182
57005070	560	500	330	196
57005080	560	630	430	305
57005090	660	630	430	343

Special sizes on request.

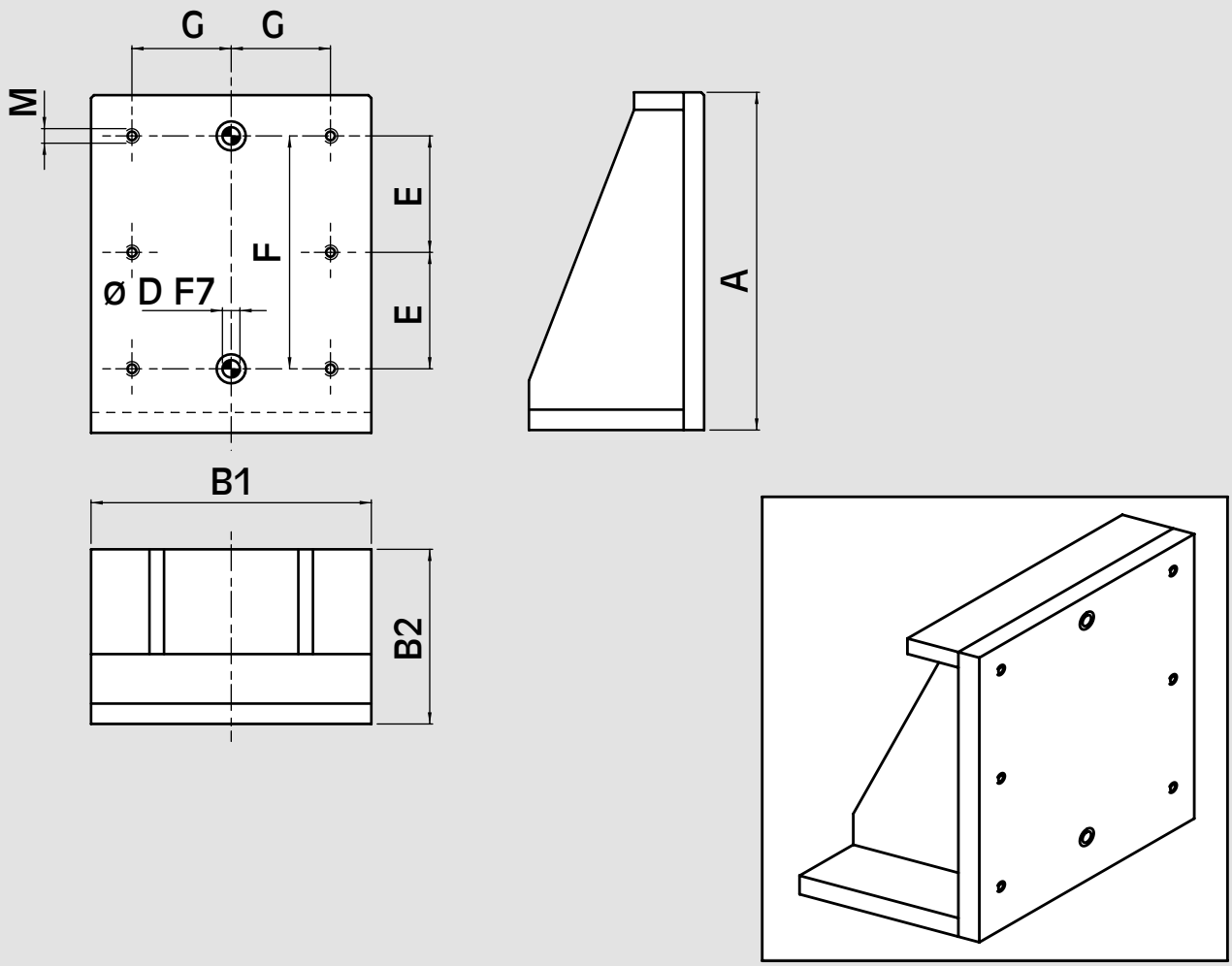

STEEL

Id. No.	A mm	B1 mm	B2 mm	Ø D mm	M	E mm	F mm	G mm	Weight kg
57100040	360	320	230	16	M 12	125	250	100	66
57100050	460	400	330	16	M 12	175	350	150	130
57100060	510	400	330	16	M 12	200	400	150	139
57100070	510	500	330	16	M 12	200	400	200	182
57100080	560	500	330	16	M 12	225	450	200	196
57100090	560	630	430	16	M 12	225	450	250	305
57100000	660	630	430	16	M 12	275	550	250	343

Special sizes on request.

Modular Tombstone

Angle plates with grid

- Steel
- With grid holes for plates

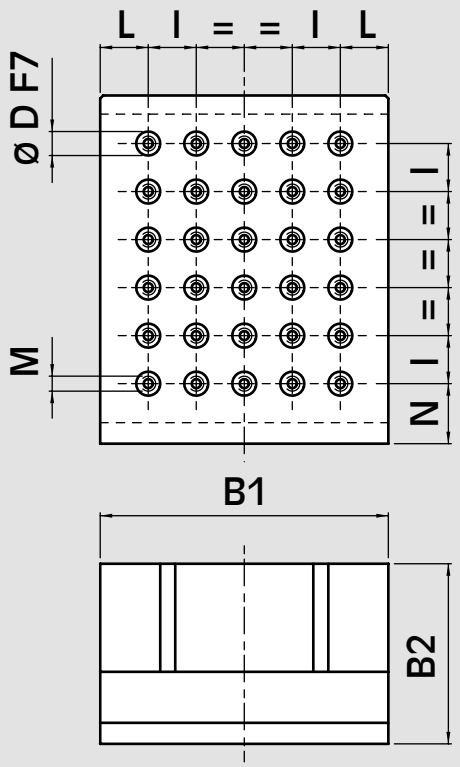

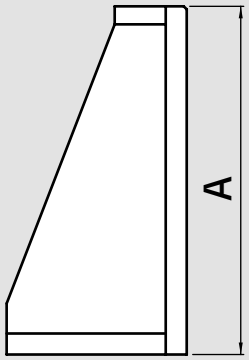

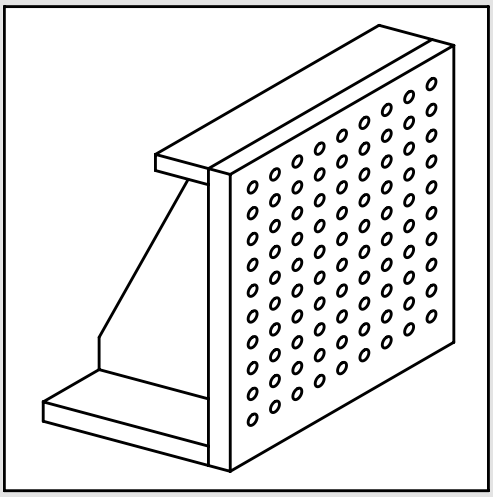

STEEL

Id. No.	A mm	B1 mm	B2 mm	Ø D mm	M	l mm	L mm	N mm	Weight kg
57110040	360	320	230	16	M 12	50	35	60	65
57110050	460	400	330	16	M 12	50	50	60	129
57110060	510	400	330	16	M 12	50	50	60	137
57110070	510	500	330	16	M 12	50	50	60	180
57110080	560	500	330	16	M 12	50	50	60	193
57110090	560	630	430	16	M 12	50	40	60	302
57110100	660	630	430	16	M 12	50	40	60	339

Special sizes on request.

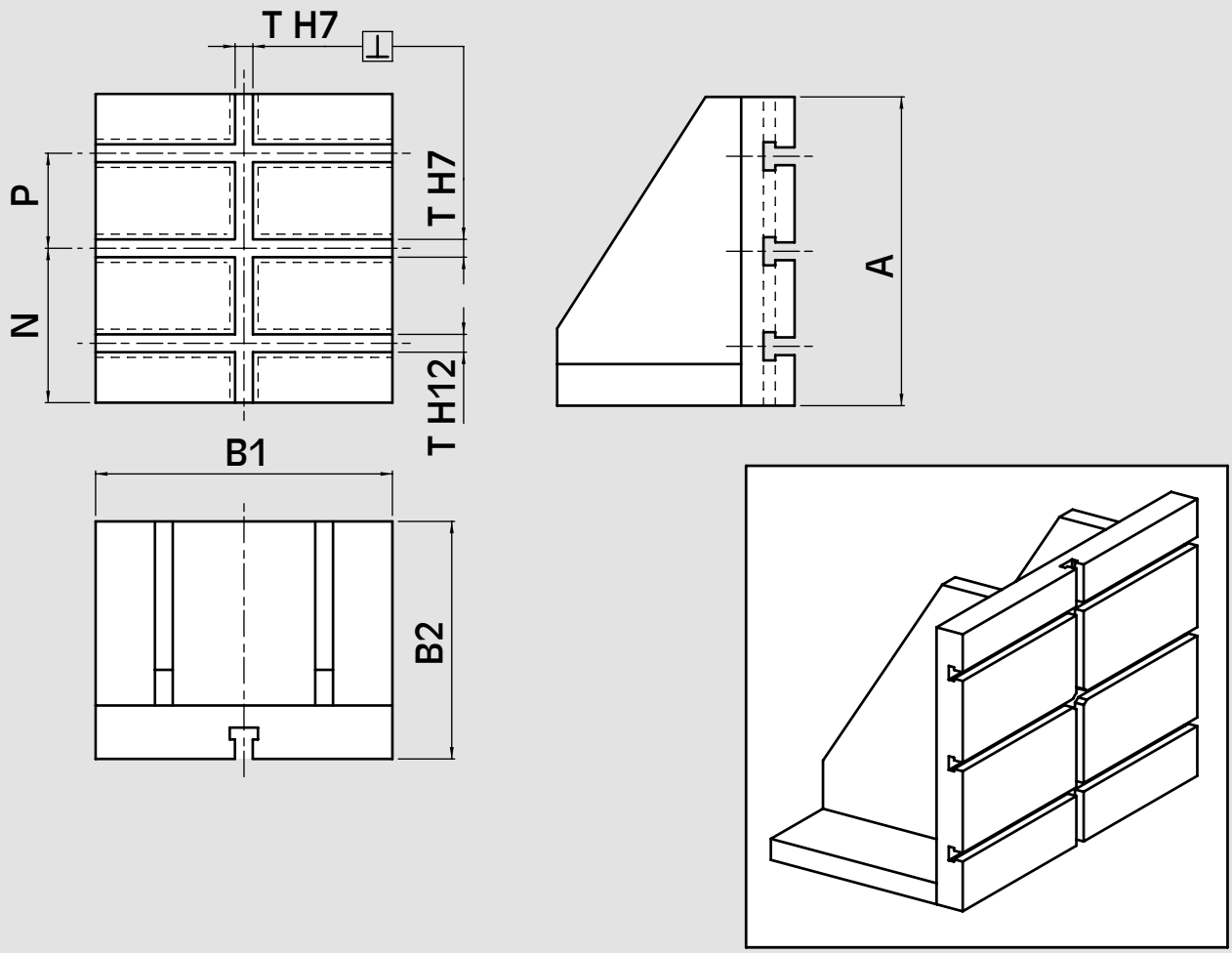

STEEL

Id. No.	A mm	B1 mm	B2 mm	N mm	P mm	T mm	⊥ mm	Weight kg
57270010	360	350	230	180	120	12	0,01	76
57270020	500	350	330	250	160	12	0,02	125
57270030	460	450	330	230	150	12	0,02	145
57270040	600	450	330	300	190	14	0,025	176
57270050	350	500	230	175	100	14	0,02	102
57270060	500	550	330	250	160	14	0,02	197
57270070	800	550	400	400	260	14	0,025	318
57270080	450	600	330	225	130	16	0,02	193

Special sizes on request.

Modular Tombstone

Smooth ground plates

■ Steel

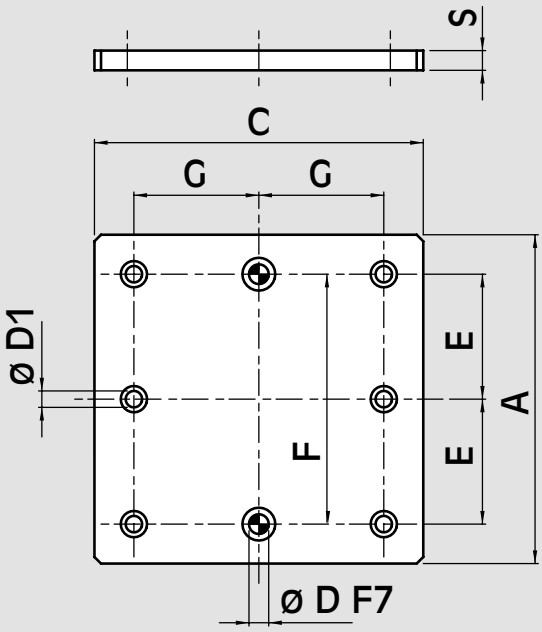

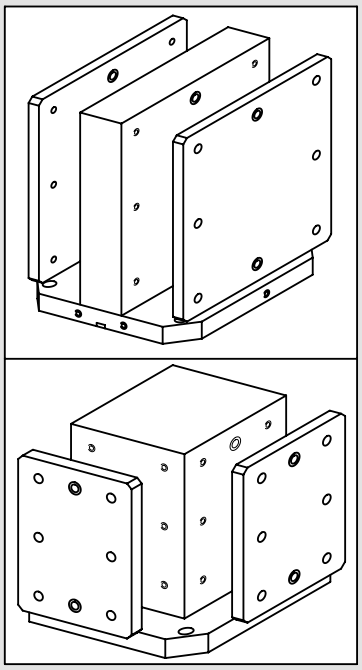

STEEL

Id. No.	C mm	A mm	Ø D mm	Ø D1 mm	E mm	F mm	G mm	S mm	Weight kg
57120025	160	400	12	11	150	300	40	20	10
57120090	250	600	16	13	250	500	75	25	29
57120130	350	600	16	13	250	500	125	25	41
57120155	400	600	16	13	250	500	150	25	47
57120175	450	800	16	13	350	700	175	25	70,5
57120195	500	600	16	13	250	500	200	25	58,5
57120210	550	800	16	13	350	700	225	25	86
57120235	630	800	16	13	350	700	250	25	98,5
57120250	800	800	16	13	350	700	350	30	149

Special sizes on request.

Ground plates with grid

- Steel
- With grid holes for plates

Modular Tombstone

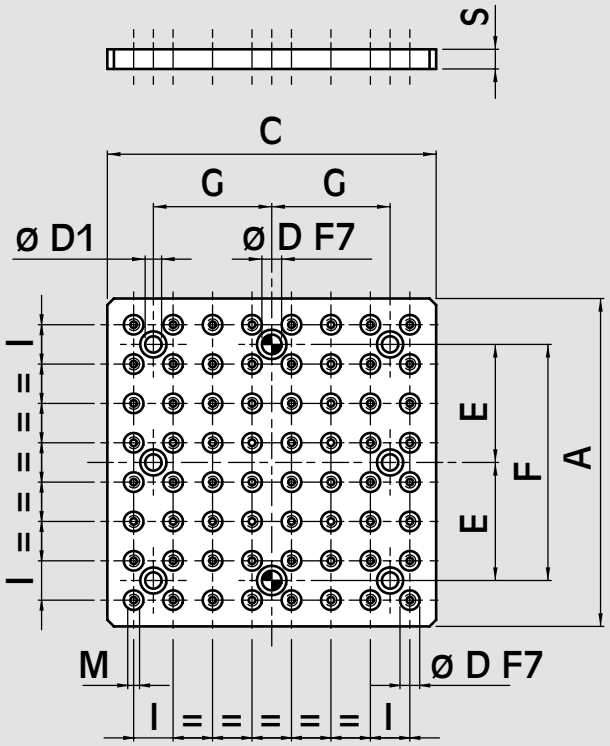

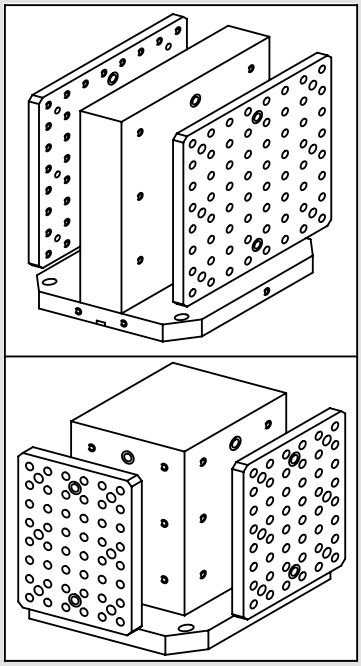

STEEL

Id. No.	C mm	A mm	Ø D mm	Ø D1 mm	M	E mm	F mm	G mm	I mm	S mm	Weight kg
57050025	160	400	12	11	M 10	150	300	40	40	30	15
57050090	250	600	16	13	M 12	250	500	75	50	35	39
57050130	350	600	16	13	M 12	250	500	125	50	35	55
57050155	400	600	16	13	M 12	250	500	150	50	35	63
57050175	450	800	16	13	M 12	350	700	175	50	35	95
57050195	500	600	16	13	M 12	250	500	200	50	35	78
57050210	550	800	16	13	M 12	350	700	225	50	35	114
57050235	630	800	16	13	M 12	350	700	250	50	35	131
57050250	800	800	16	13	M 12	350	700	350	50	35	166

Special sizes on request.

Modular Tombstone

Smooth ground Subplates

- Steel
- Without grid holes

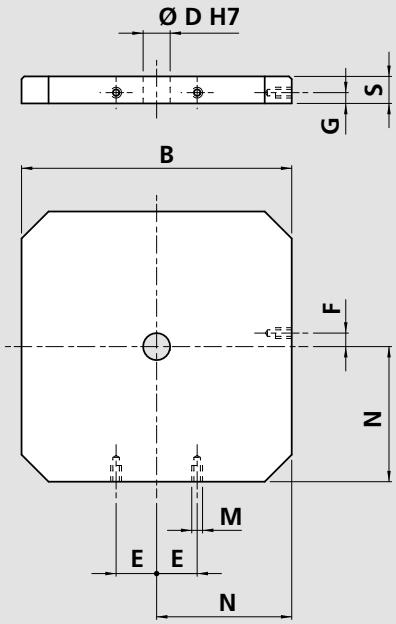

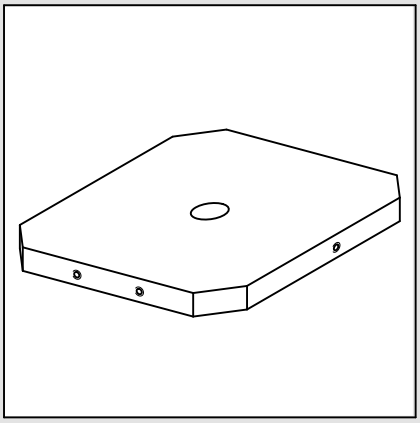

STEEL

Id. No.	B mm	Ø D mm	M	N mm	E mm	F mm	G mm	S mm	Weight kg
57130010	320	30	-	160	-	-	-	40	30
57130020	400	50	M 16	200	55	25	18	40	48
57130030	450	50	-	225	-	-	-	40	61
57130040	500	50	M 16	250	75	25	18	40	76
57130050	550	50	-	275	-	-	-	40	93
57130060	630	50	M 16	315	100	25	18	40	121

Special sizes on request.

Ground Subplates with grid

- Steel
- With grid holes

Modular Tombstone

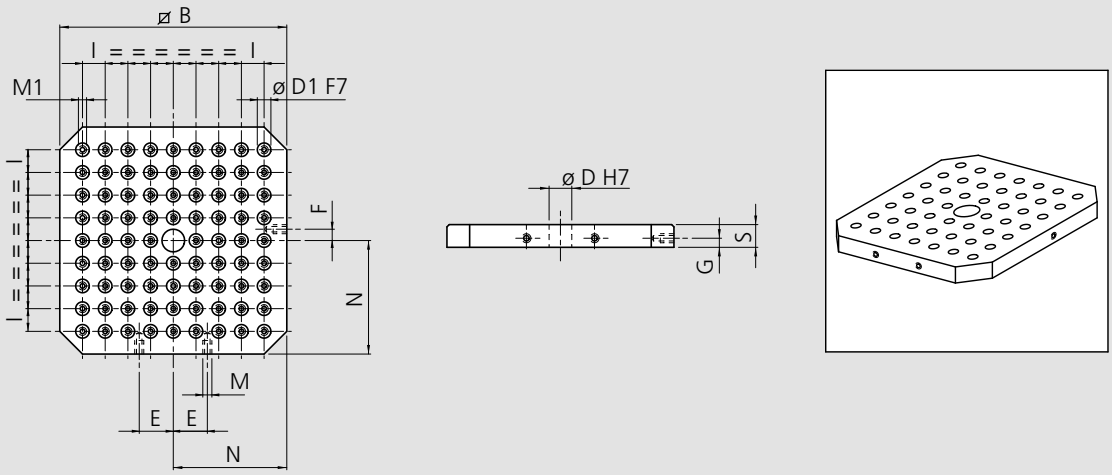

STEEL

Id. No.	B mm	Ø D mm	M	E mm	F mm	G mm	Ø D1 mm	M1	I mm	N mm	S mm	Weight kg
57140010	320	30	-	-	-	-	16	M12	50	160	40	29
57140020	400	50	M16	55	25	18	16	M12	50	200	40	47
57140030	450	50	-	-	-	-	16	M12	50	225	40	59
57140040	500	50	M16	75	25	18	16	M12	50	250	40	74
57140050	550	50	-	-	-	-	16	M12	50	275	40	90
57140060	630	50	M16	100	25	18	16	M12	50	315	40	117

Special sizes on request.

Ground Subplates with T-slots

- Steel

Modular Tombstone

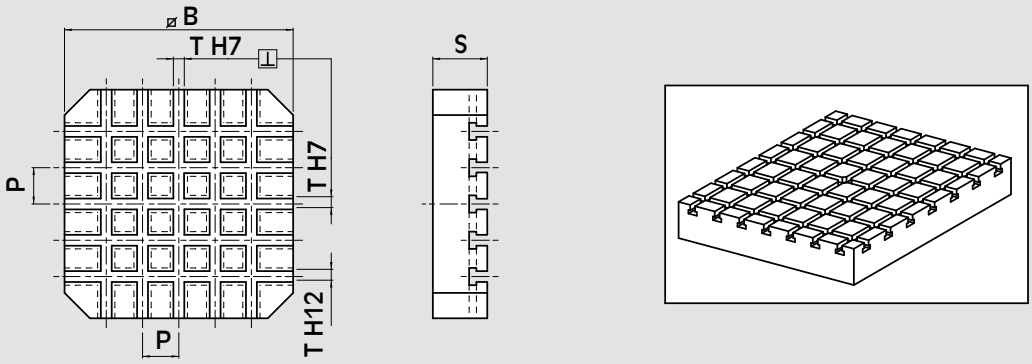

STEEL

Id. No.	B mm	P mm	S mm	T mm	⊥ mm	Weight Kg
57340010	400	56	80	12	0.015	85
57340020	450	65	100	14	0.015	137
57340030	500	70	100	14	0.02	171
57340040	550	80	100	14	0.02	210
57340050	630	100	100	14	0.025	284

Special sizes on request.

TC

Modular clamping equipment

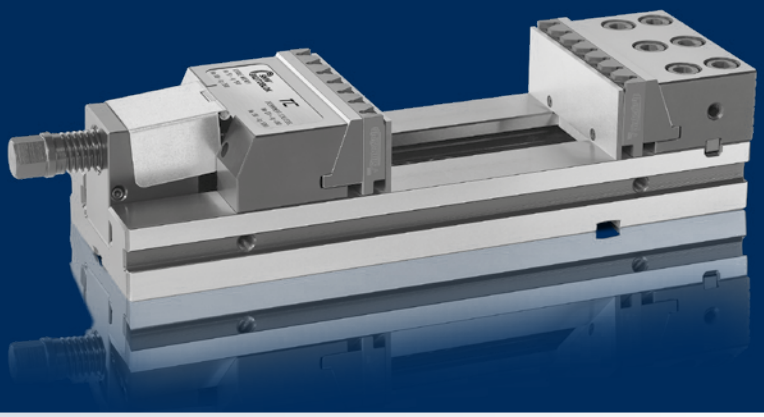

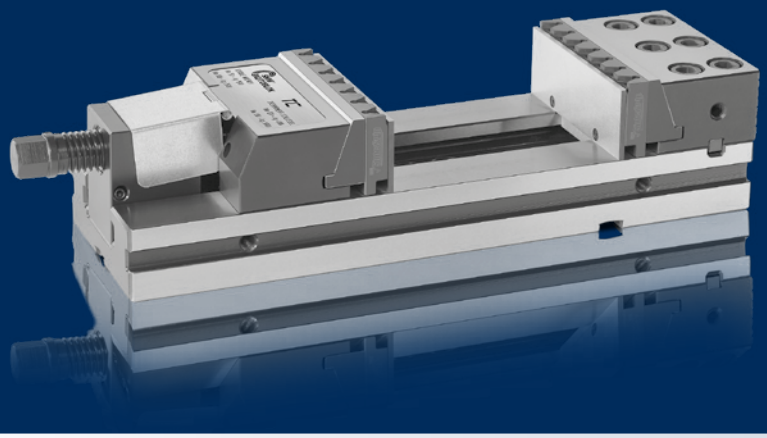

TC

Modular clamping equipment

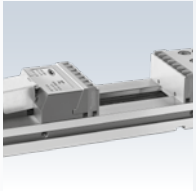

Page 2.4

TC
Modular clamping equipment

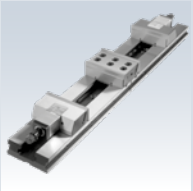

Page 2.11

DCS-TCt
double clamping equipment

Page 2.6

TC & SinterGrip
The New Choice

Page 2.14

TC
Clamping modules

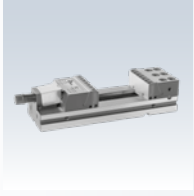

Page 2.8

TCt
Clamping equipment for T-slots

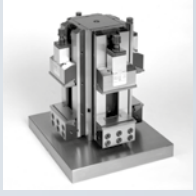

Page 2.18

TC
Modular vertical clamping system

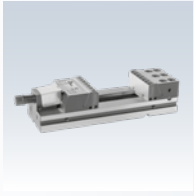

Page 2.9

TCg
Clamping equipment for grid

Page 2.23

TC
Accessories for TC clamping equipment

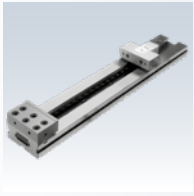

Page 2.10

TCt-XL
Clamping equipment for T-slots

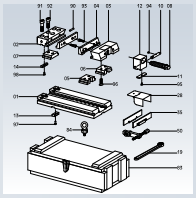

Page 2.27

TC
Spare parts for TC clamping equipment

TC
Modular clamping equipment

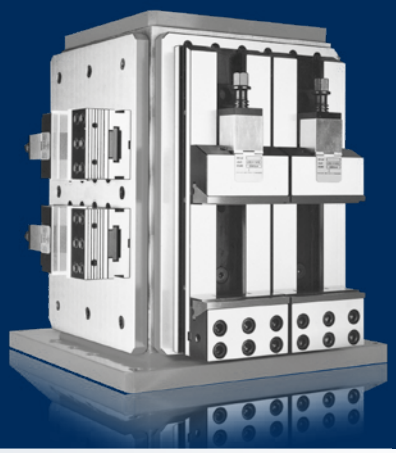

TC is ...

Modular

We use the true definition of the term modular; product which is composed of separate or separable elements. With these separate or separable elements we can achieve many different clamping solutions.
The only different component of these clamping solutions is the base.
The base length determines the clamping capacity while all other components remain the same.
Fixed and movable vise jaws can be used with any base configuration, offering the most flexible workholding solutions available.
This modular system allows the user to realize the maximum number of workholding combinations with the minimum investment in equipment.

Precision

All sliding and joining surfaces are precision ground.
Each item is thoroughly inspected and tested both before and after assembly.
This rigid quality control allows us to offer the high tolerance levels shown on page 47.
Alignment of the clamping equipment is ensured by using high tolerance ground keys.
Other key dimensions are available upon request.
The clamping jaws pull the workpiece down 0.2 mm. (0.008”) against the ground base for unmatched accuracy.

Durability

All components are constructed from oversize steel profiles ensuring the equipment is exceptionally sturdy and can provide the user with optimal performance.
Wear parts are special treated to achieve a surface hardness of 50/60 HRC.
All non-ground surfaces are burnished to protect against corrosion.

Quick-change

A patented system allows quick repositioning of the clamping jaws .
The clamping jaw is lifted slightly from the base and shuttled to the next clamping position then lowered into place.
Part changeovers and size changes can be made quickly and easely.

Reliable

The six bolts mounting the fixed jaw to the base provide the most rigid platform possible to support the clamped workpiece.

Versatility

The fixed jaw has serrations on the rare face so that by reversing it, unmachined workpieces can be clamped.
The movable jaw can be rigid or floating (for clamping on uneven surfaces).
The interchangeability of the rigid slide-way with the floating slide-way (both encluded as standard equipment) allows the user to clamp finished or raw workpieces.
The standard CLAK system allows the quick-change of parallels, angular parallels, soft jaws and “V “jaws in order to machine any workpiece.

Manageable

The weight of 27 kg (59 lb.) for the 150 mm. x 200 mm. (6”x 8”) vise and simple clamping system allow for easy movement from one machine tool to another.

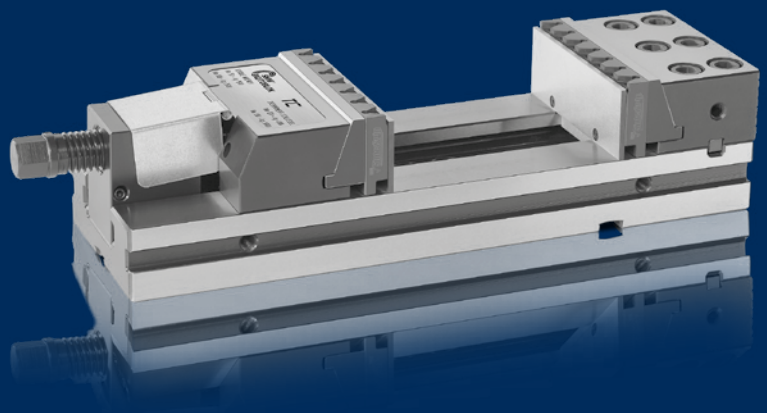

The advantages of modularity

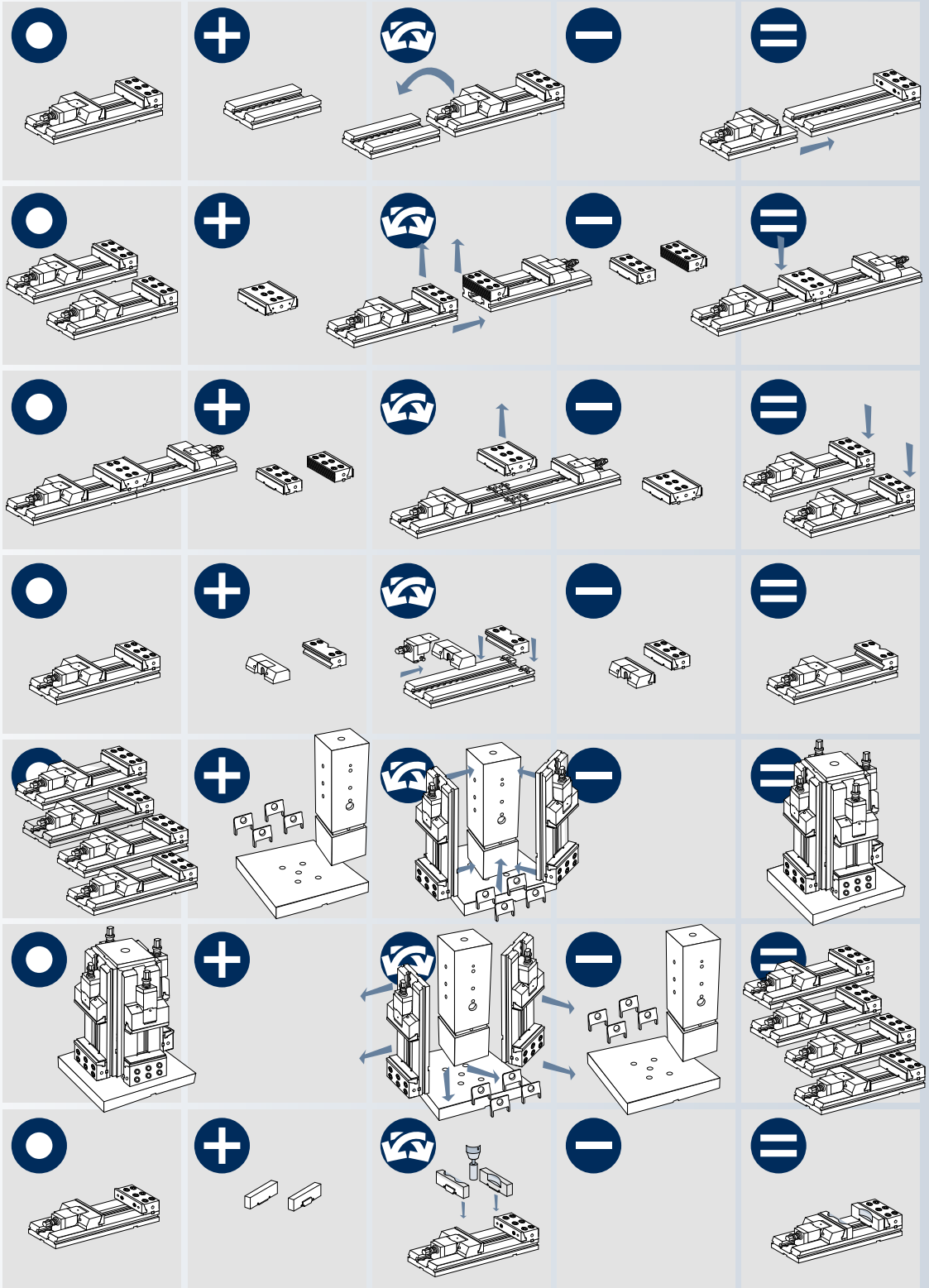

Start Add Combine Remove Result

TC
Modular clamping equipment

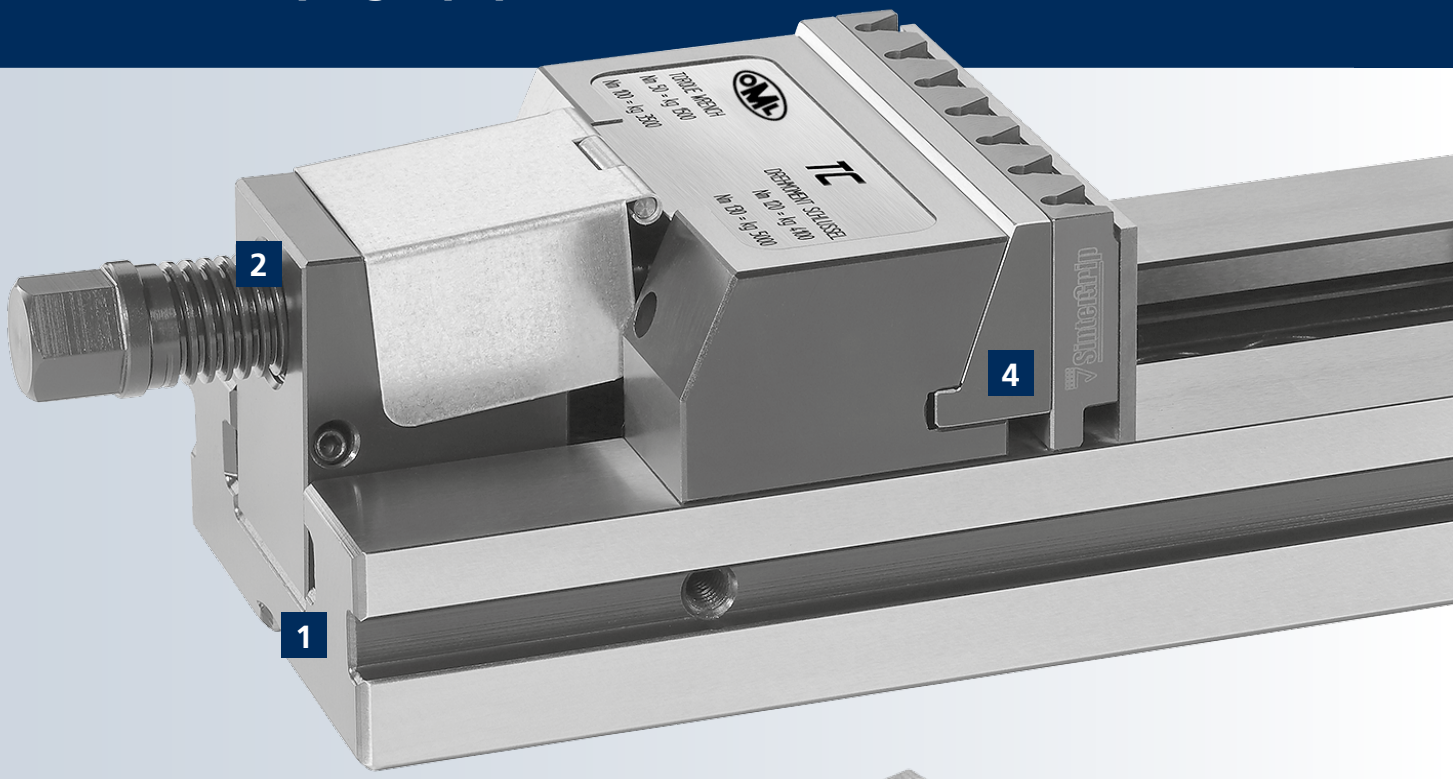

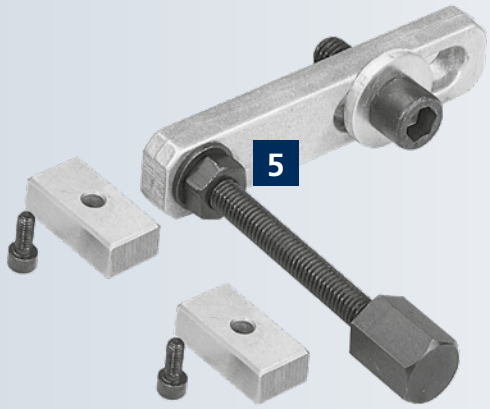

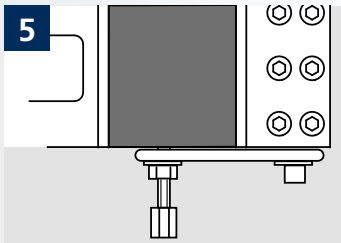

Work stop

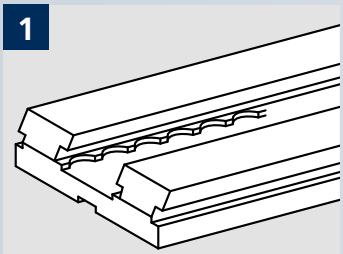

Patended system for quick positioning

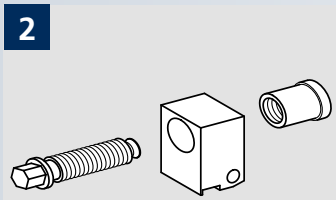

Block for clamping screw with threated anti-friction bronze bushing

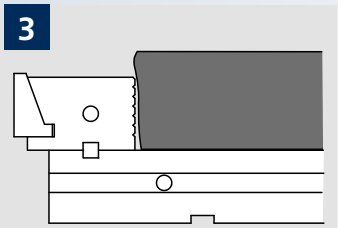

Fixed support turned of 180° (grooved part)

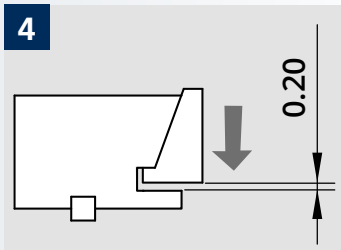

Pull down jaws

TC
Modular clamping equipment

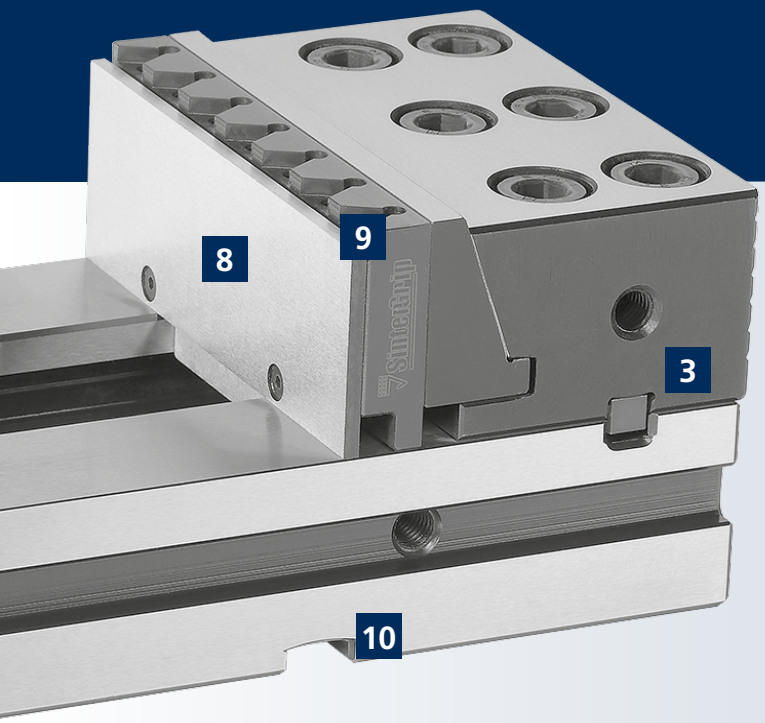

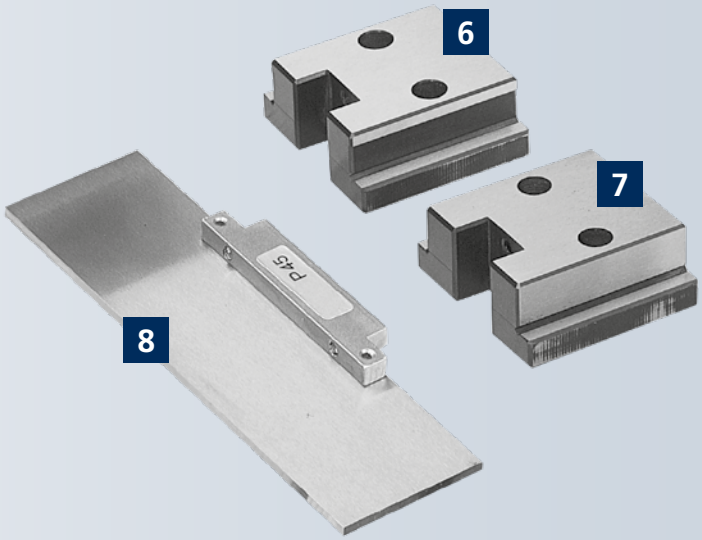

6

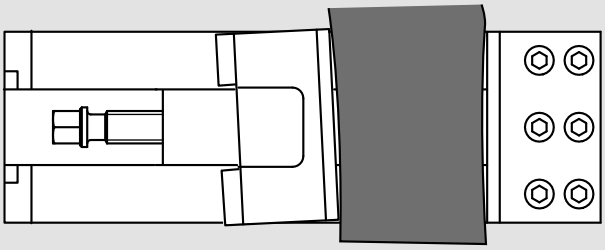

Floating slide - way raw workpieces

7

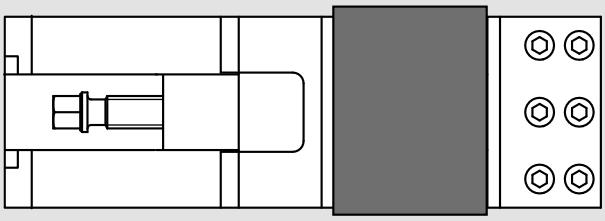

Rigid slide-way for finished workpieces

8

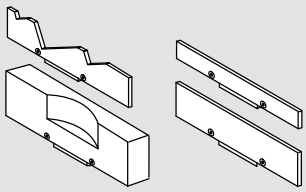

Parallels, Angulars parallels, soft jaws quick change

9

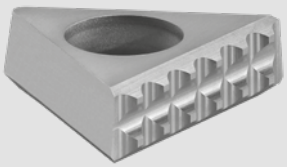

Jaws for SinterGrip inserts

10

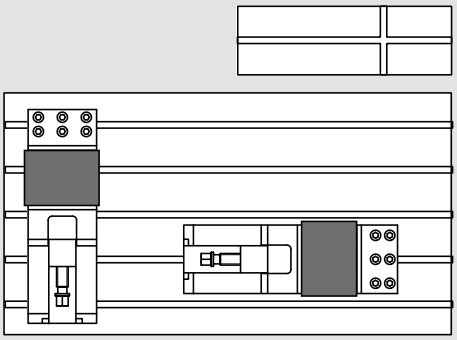

Cross key for T-slots M.T.

SinterGrip: the New Choice

Our new patented product **SinterGrip** is born to satisfy the current need to clamp a workpiece for very few millimeters (with SinterGrip 3,5 mm clamping surface), and this for the following reasons:

1) In order to machine the workpiece completely in a single operation (especially for 5 axis machines);
2) In order to save money for the raw materials, especially when they have a big impact on the price (aluminum, titanium, etc.)

Indirectly to these reasons, and in order to improve the performance of the machine tool and the tools

higher cutting speed + higher feed rate =
bigger volume of metal removed =
less time to machine the workpiece

the market requires safe clamping, which could at the same time possibly avoid the deformations of the piece itself.

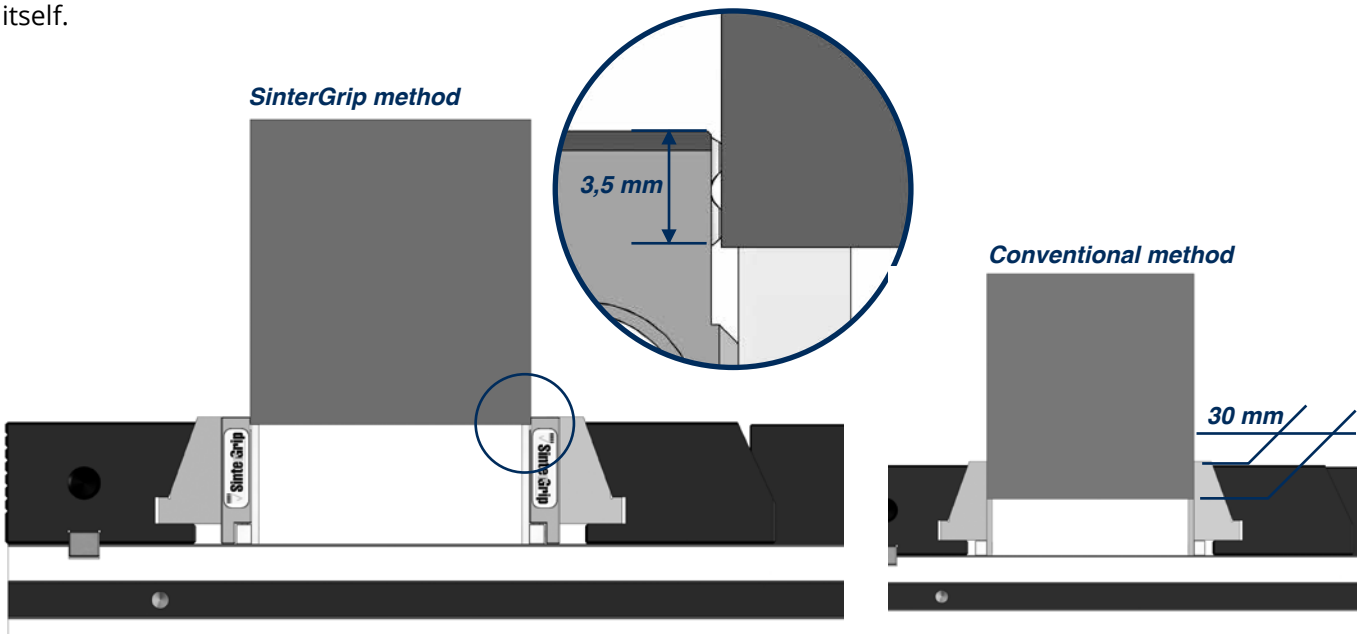

Only 3,5 mm clamping surface, no need of pre-machining the workpiece, clamping stability, higher cutting rate: **SinterGrip** brings only advantages compared to the traditional systems.

On the contrary, traditional systems need, for the clamping of the workpiece, a bigger clamping surface, with the result of waste of raw materials and greater possibility of deformation of the workpiece.

Working example: jaws mounted on a TC Vise

Working example: with inserts SinterGrip mounted.

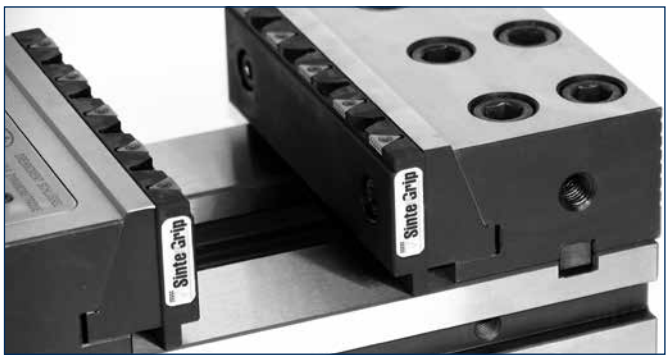

The company policy from OML has always been to seek the best solution for the customer, developing and updating all our products with the latest technologies available.

In this sense, the modular vises of the TC series will now be supplied with: **pair of jaws without tungsten carbide coating, 1 pair of parallels, 1 T9 TORX wrench and 1 kit of 10 screws**, which allow to assemble the latest products **SinterGrip** also on this series.

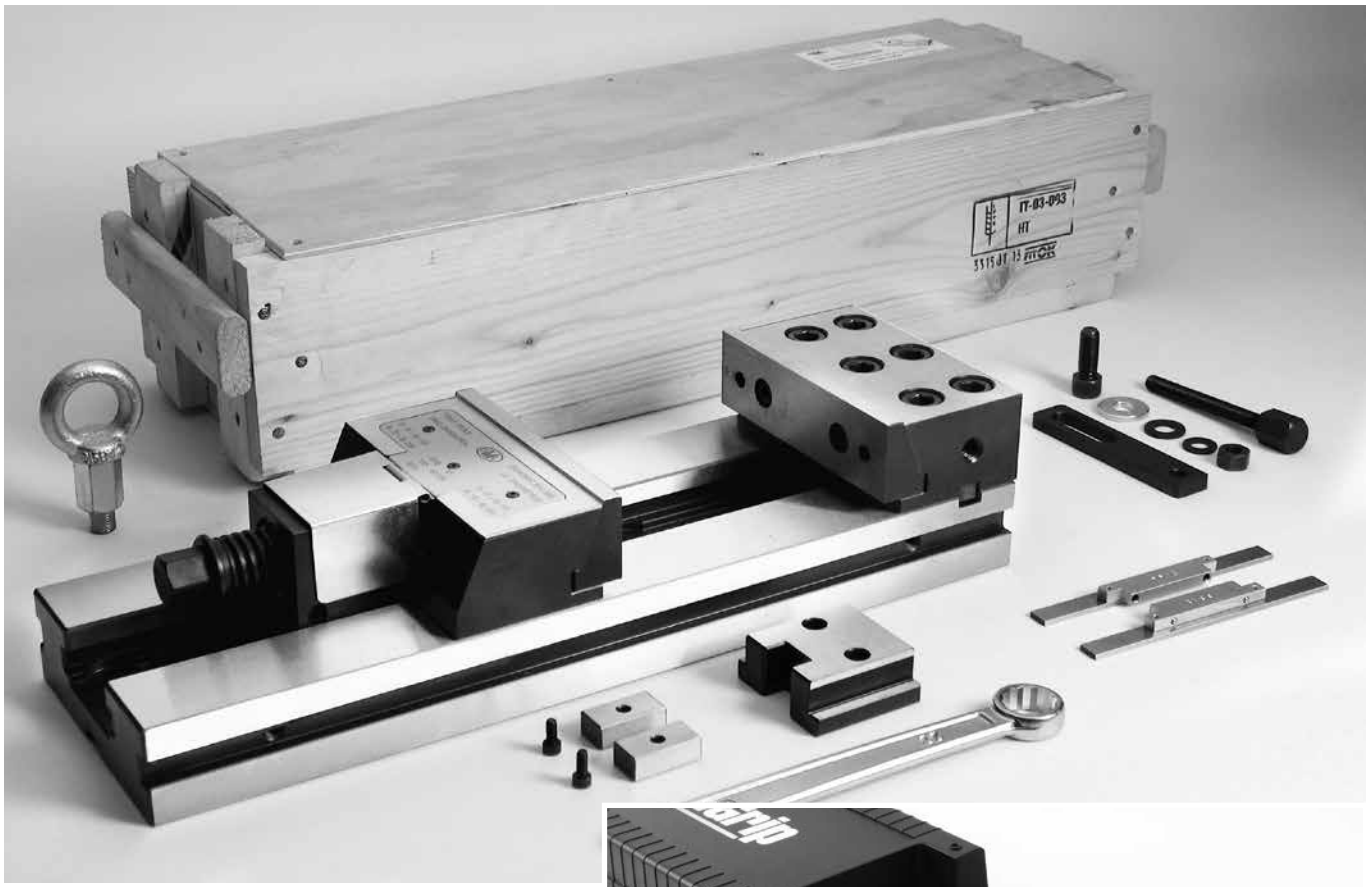

Working example:
jaws mounted on a TC vise.
SinterGrip inserts are not included:
ask to your local dealer.

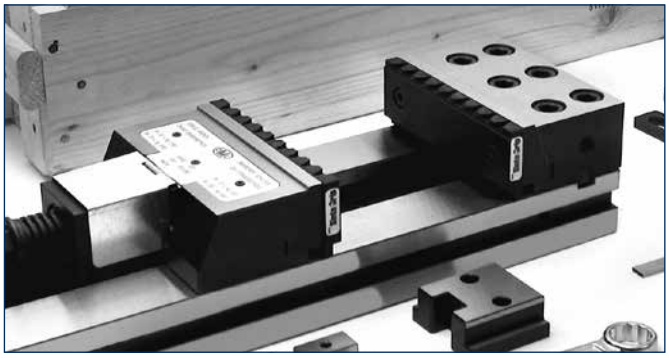

Working example: mounting of the jaws.

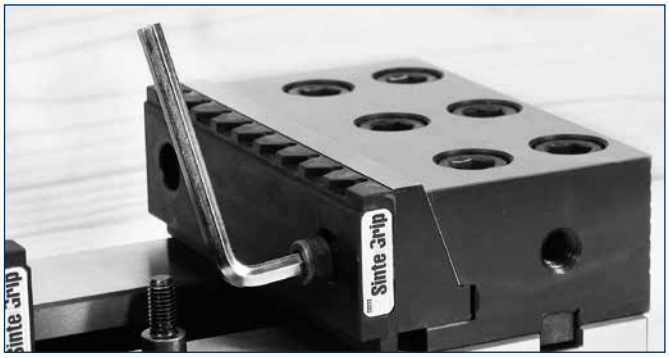

TCt

Clamping equipment for T-slots

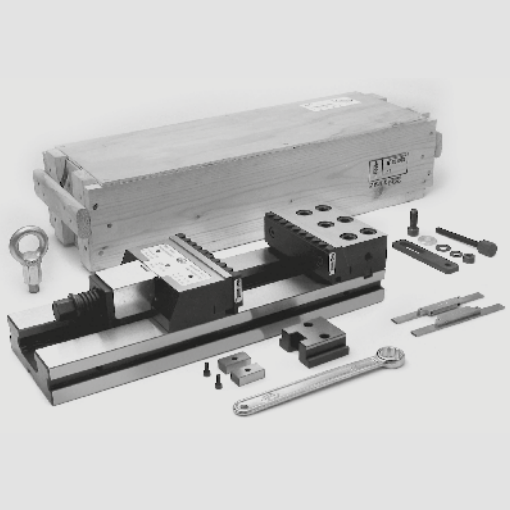

Clamping equipment **TCt** complete with wrench, work stop, rigid slide way, floating slide-way (for raw workpiece), pair of positioning keys, pair of SinterGrip jaws (inserts not included), pair of **CLAK** parallels, cover for the protection of the screw, eye bolt for lifting, wooden packing case.

NOTE: SinterGrip jaws see page S.15

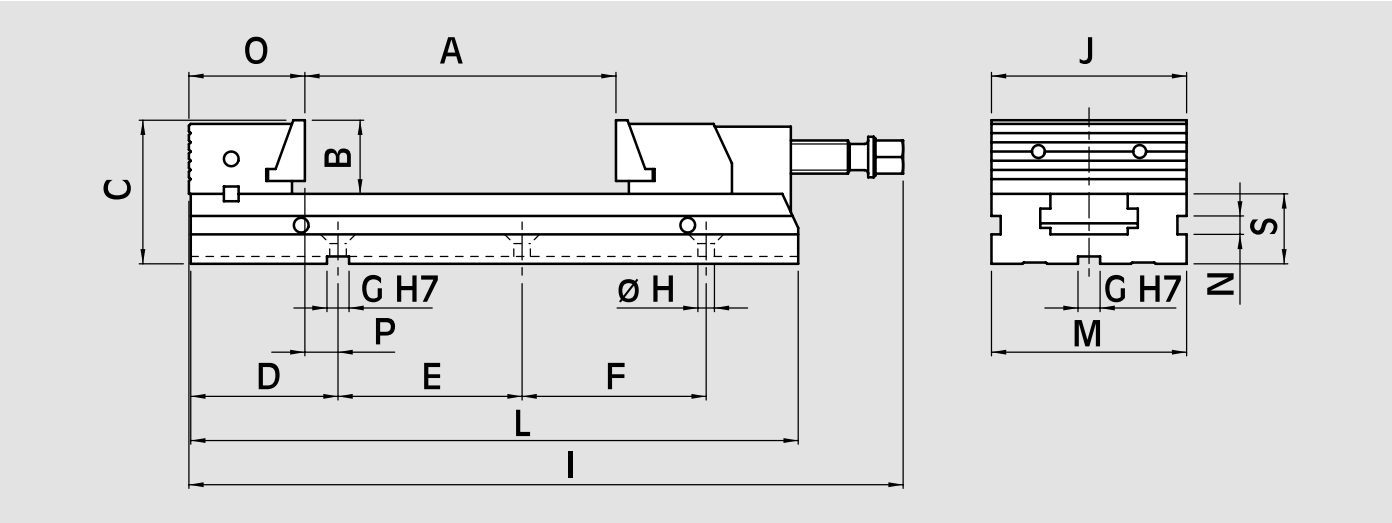

Type	Id. No.	A mm	B mm	C mm	D mm	E mm	F mm	G mm	H mm	I mm	J mm	L mm	M mm	N mm	O mm	P mm	S mm	Weight kg
TCt 110x100	77580101	100	40	78	80	150	-	12	9	338	110	280	110	10	63	18	38	11.5
TCt 110x150	77580102	150	40	78	80	100	100	12	9	388	110	330	110	10	63	18	38	12.5
TCt 150x200	77580201	200	50	98	114	200	-	18	12.5	481	150	413	150	13	85	30	48	27
TCt 150x250	77580202	250	50	98	114	100	150	18	12.5	531	150	463	150	13	85	30	48	29
TCt 150x300	77580203	300	50	98	114	100	100	18	12.5	588	150	520	150	13	85	30	48	31.5
TCt 200x300	77580302	300	70	138	149	200	200	18	12.5	697	200	610	200	15.5	123	27	68	78
TCt 200x400	77580303	400	70	138	149	150	150	18	12.5	797	200	710	200	15.5	123	27	68	86

Special executions on request.

Clamping equipment for grid

TCg

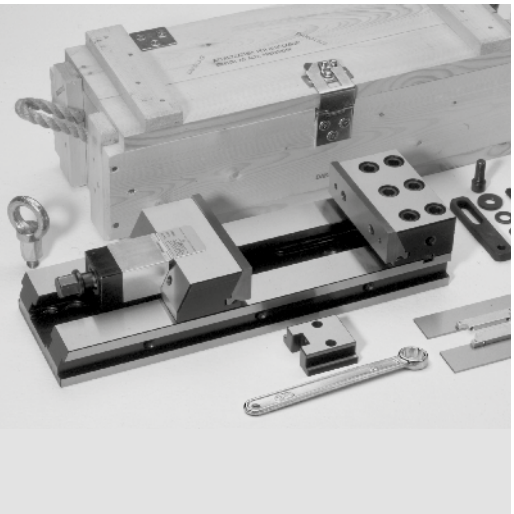

Clamping equipment **TCg** (machined for positioning holes mm16 H7*) complete with wrench, work stop, rigid slide way, floating slide-way (for raw workpiece), pair of SinterGrip jaws (inserts not included), pair of **CLAK** parallels, cover for the protection of the screw, eye bolt for lifting, wooden packing case.

***** Other fixing and positioning holes dimensions upon request.
NOTE: SinterGrip jaws see page S.15

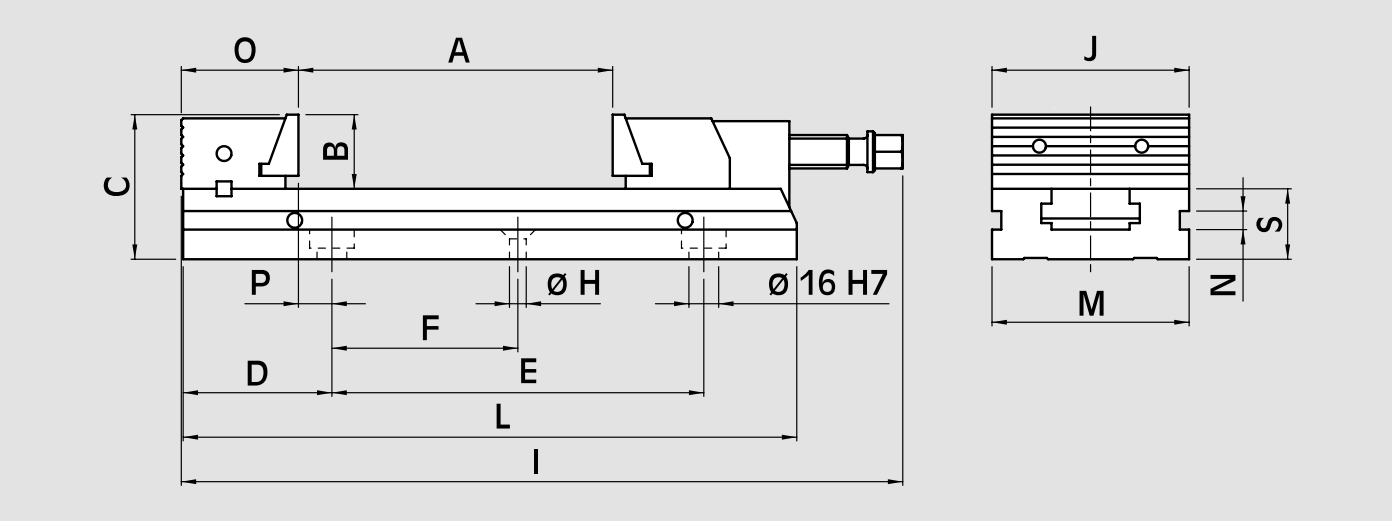

Type	Id. No.	A mm	B mm	C mm	D mm	E mm	F mm	H mm	I mm	J mm	L mm	M mm	N mm	O mm	P mm	S mm	Weight kg
TCg 110x100	77580107	100	40	78	80	150	-	9	338	110	280	110	10	63	18	38	11.5
TCg 110x150	77580108	150	40	78	80	200	-	9	388	110	330	110	10	63	18	38	12.5
TCg 150x200	77580207	200	50	98	114	200	-	12.5	481	150	413	150	13	85	30	48	27
TCg 150x250	77580208	250	50	98	114	200	-	12.5	531	150	463	150	13	85	30	48	29
TCg 150x300	77580209	300	50	98	114	200	-	12.5	588	150	520	150	13	85	30	48	31,5
TCg 200x300	77580308	300	70	138	149	400	200	12.5	697	200	610	200	15.5	123	27	68	78

TCt-XL

Clamping equipment for T-slots

- **Quick positioning for the jaw**
- **Extra long clamping range**

Clamping equipment **TCt-XL**, complete with wrench, work stop, rigid slide-way, floating slide-way (for raw workpiece), pair of positioning keys, pair of **CLAK** parallels, cover for the protection of the screw, eye bolt for lifting, wooden packing case.

NOTE: SinterGrip jaws see page S.15

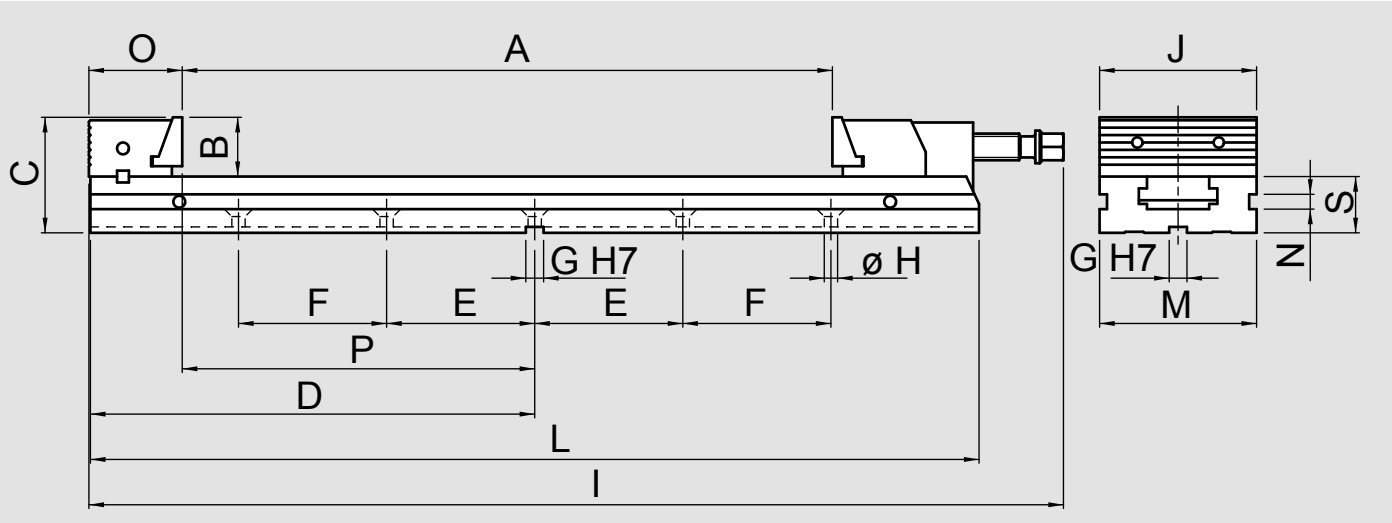

Type	Id. No.	A mm	B mm	C mm	D mm	E mm	F mm	G mm	H mm	I mm	J mm	L mm	M mm	N mm	O mm	P mm	S mm	Weight kg
TCt-XL 110x425	77580104	425	40	78	300	100	100	12	9	658	110	600	110	10	63	238	38	18.2
TCt-XL 150x545	77580204	545	50	98	379	100	150	18	12.5	825	150	758	150	13	85	298	48	40.0
TCt-XL 150x665	77580205	665	50	98	439	100	200	18	12.5	946	150	878	150	13	85	355	48	44.7

Double clamping equipment

DCS-TCt

- Quick positioning for the jaw
- Double clamping system

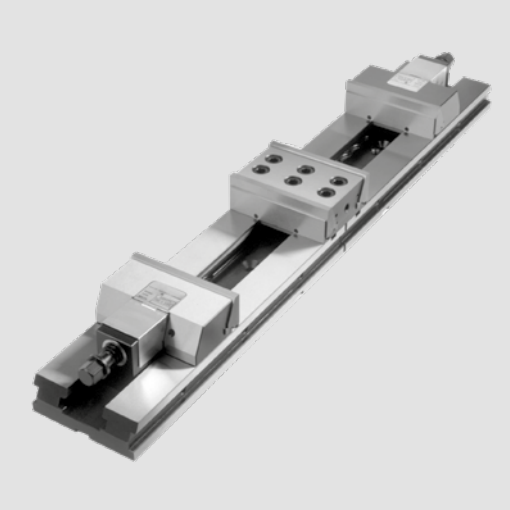

Double clamping equipment DCS-TCt complete with:
1 wrench,
2 work stops,
2 rigid slide-ways,
2 floating slide-ways (for raw workpiece),
1 pair of positioning keys,
2 pair of CLAK parallels,
2 covers for the protection of the screw,
2 eye bolts for lifting,
wooden packing case.

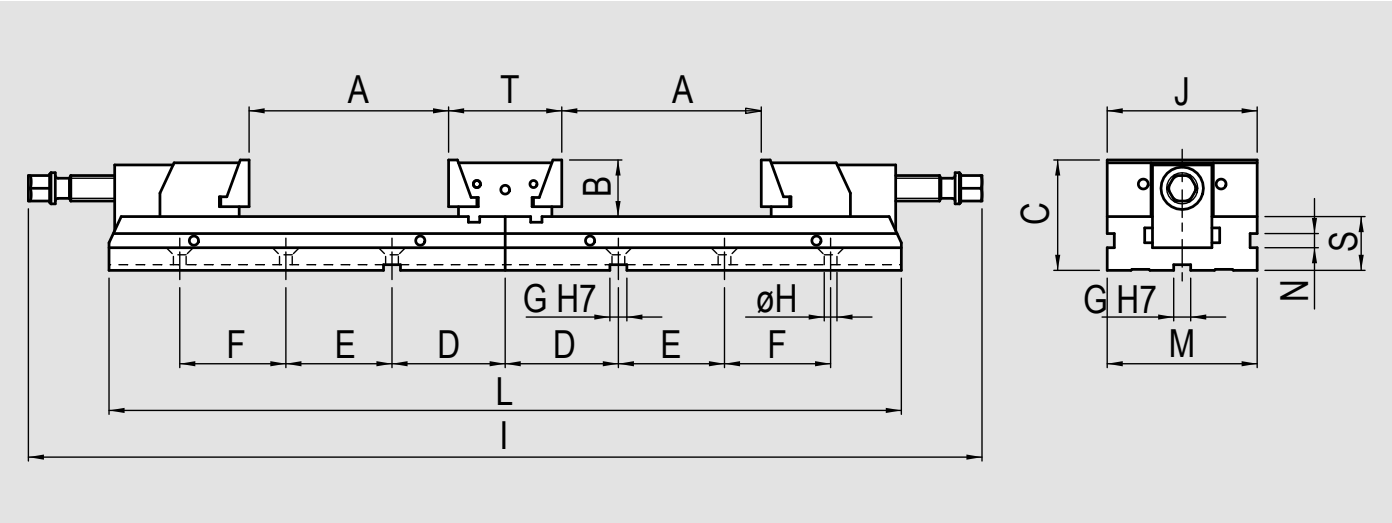

Type	Id. No.	A mm	B mm	C mm	D mm	E mm	F mm	G mm	H mm	I mm	J mm	L mm	M mm	N mm	S mm	T mm	Weight kg
DCS-TCt 110x130	77581101	130	40	78	80	150	-	12	9	676	110	56	110	10	38	80	22
DCS-TCt 110x180	77581102	180	40	78	80	100	100	12	9	776	110	660	110	38	80	24	24
DCS-TCt 150x230	77581201	230	50	98	116	200	-	18	12.5	966	150	830	150	13	48	108	52
DCS-TCt 150x280	77581202	280	50	98	116	100	150	18	12.5	1066	150	930	150	13	48	108	56
DCS-TCt 200x330	77581302	330	70	138	150	200	200	18	12.5	1394	200	1222	200	15.5	68	194	144

Working example

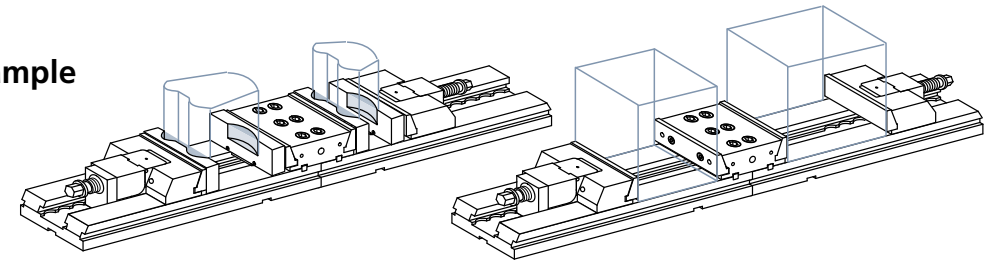

The modularity of the system combined with some other components offers many additional clamping solutions.

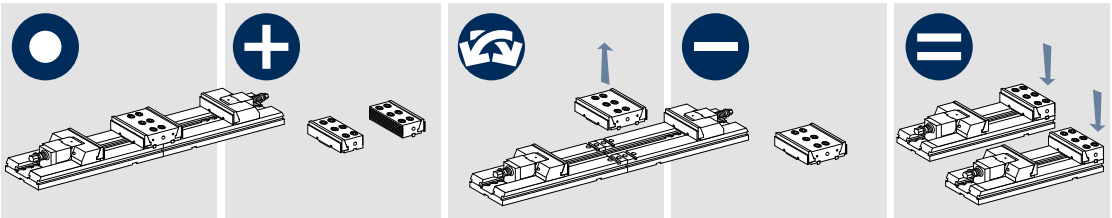

Clamping the workpiece

For controlled clamping and the best repetibility use of a torque wrench is recommended:

1 clamp the workpiece with the torque wrench at the necessary clamping force in accordance with the following diagram
2 Zero set on the workpiece
3 Machine the first workpiece
4 Clamp the other workpieces at the same clamping force

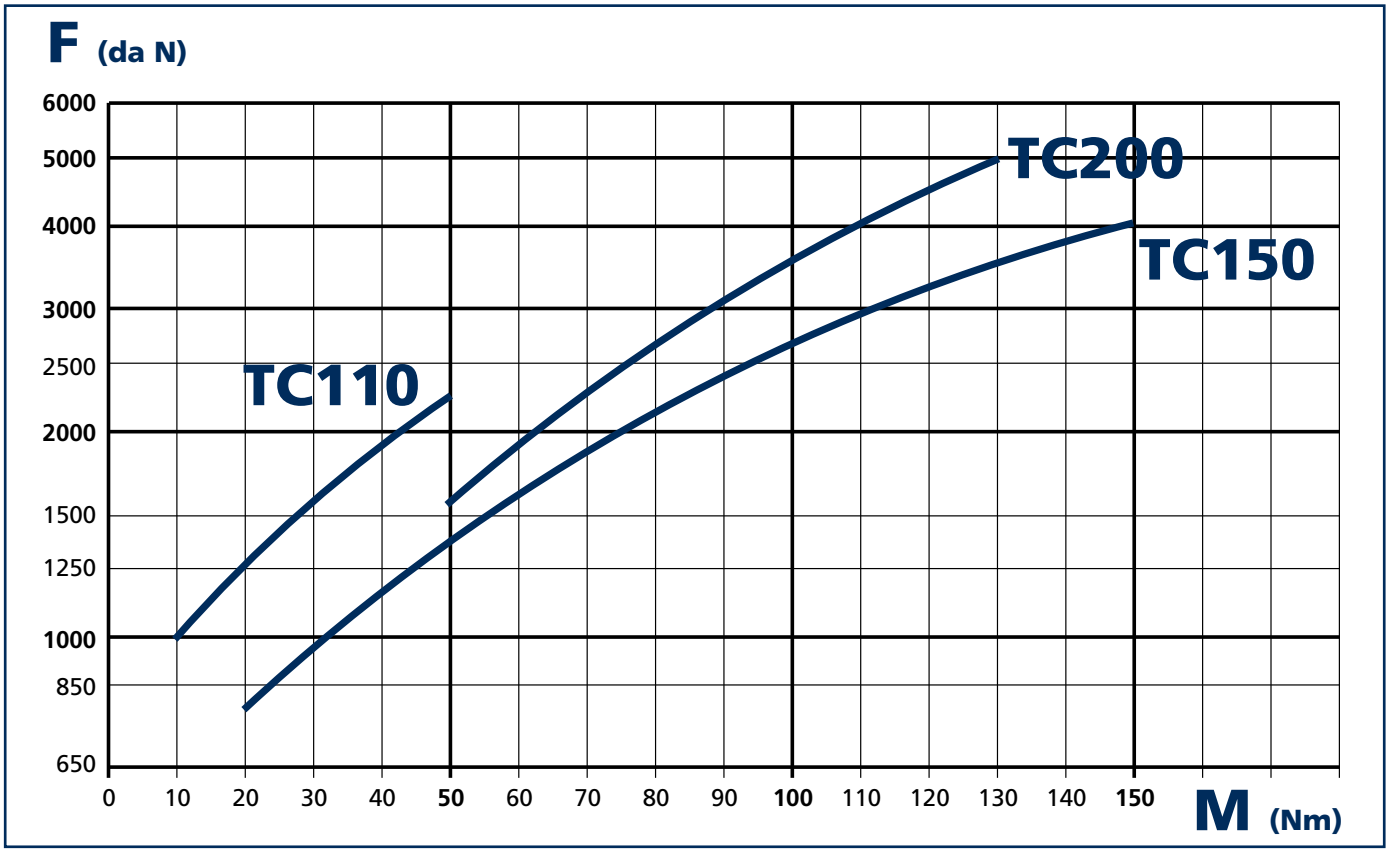

Jaw alignement

When it is necessary to replace the jaws in order to ensure the best part pull-down, we recommended the following steps:

1) make sure the jaws are properly secured to the support.

2) loosen the adjustment screws until the jaws are backed off about 0.2 mm. (0.008”) tighten the lock nuts located on the back side of the support in the opposite direction of the adjustment screws

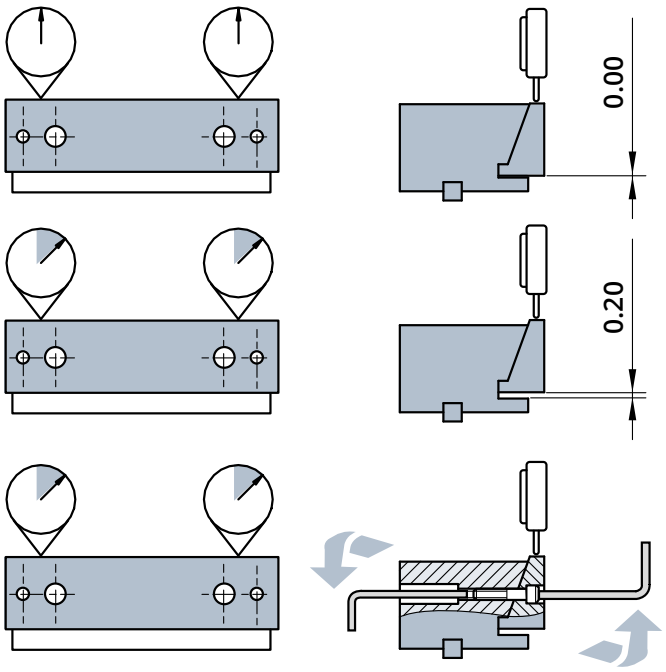

How to clamp the vises at the table of the machine tool.

In order to obtain a perfect clamping of the workpiece and in order to obtain the tolerances of which point " E " is necessary to clamp the vise on the table of the machine tool by means of the ORIGINAL OML'S CLAMPS (Ex cod. 58022795 see drawing n. 1).

Or by means of the T-nuts (58022595 see drawing n. 2)

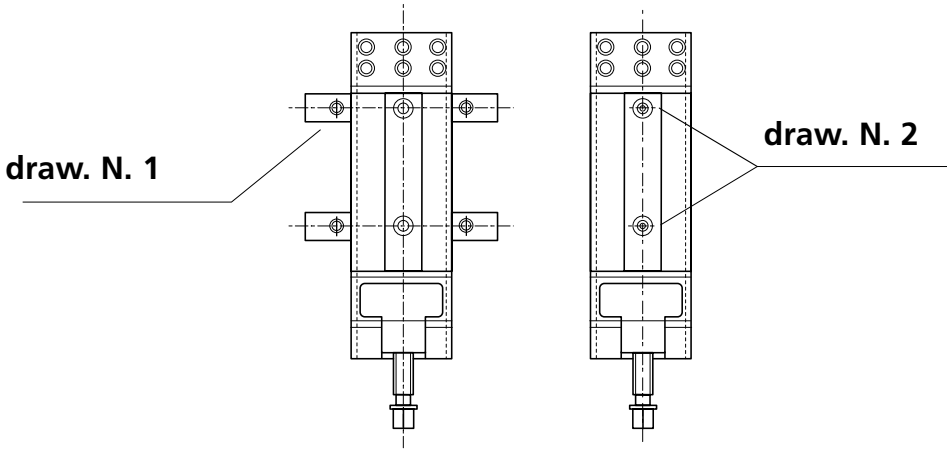

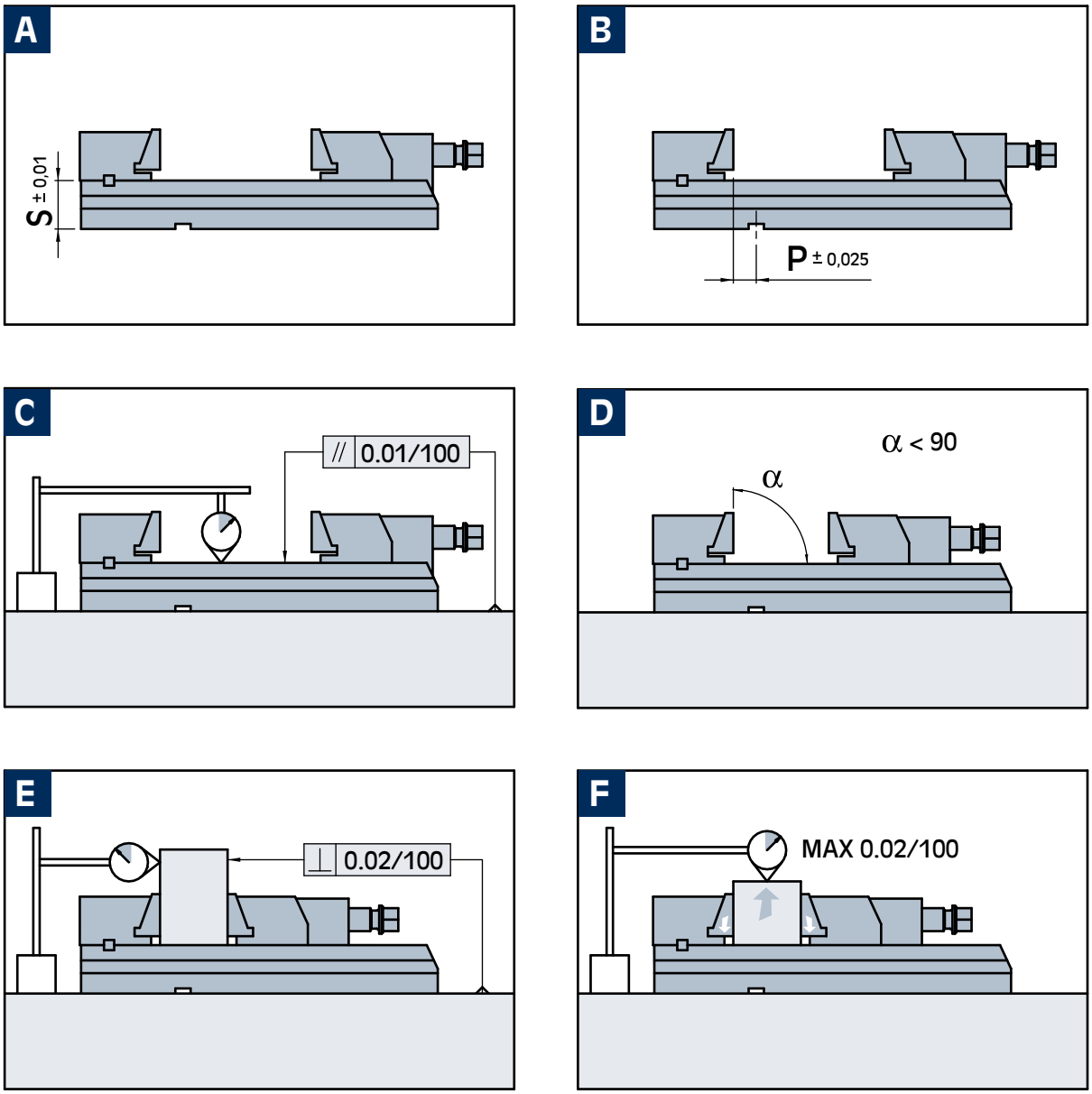

TCt extension element with pair of positioning keys

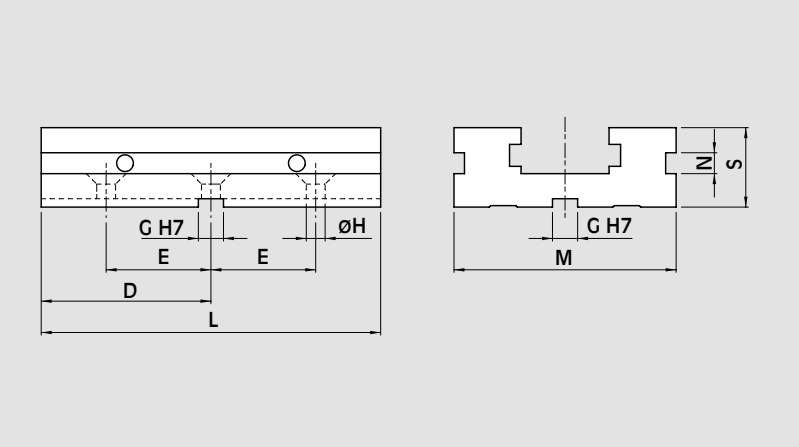

Id. No.	for type	D mm	E mm	G mm	H mm	L mm	M mm	N mm	S mm	Weight kg
58 01 17 00	TCt 110 x ...	81	50	12	9	162	110	10	38	3,5
58 02 17 00	TCt 150 x ...	114	75	18	12,5	228	150	13	48	9
58 03 17 00	TCt 200 x ...	150	100	18	12,5	300	200	15,5	68	22

Working example

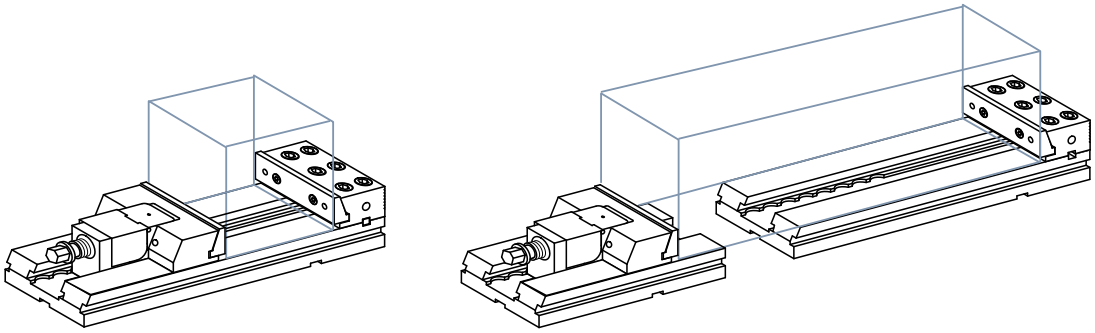

The modularity of the system combined with some other components offers many additional clamping solutions.

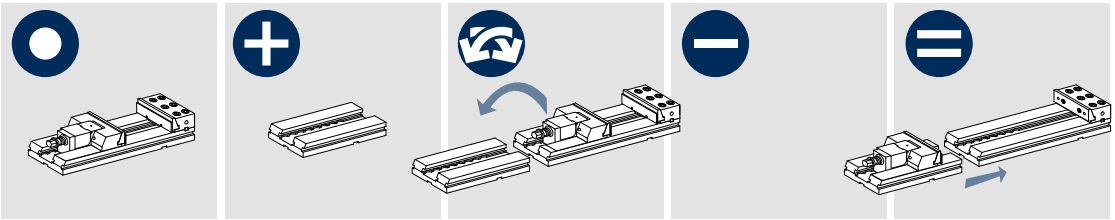

TC double fixed support with jaw

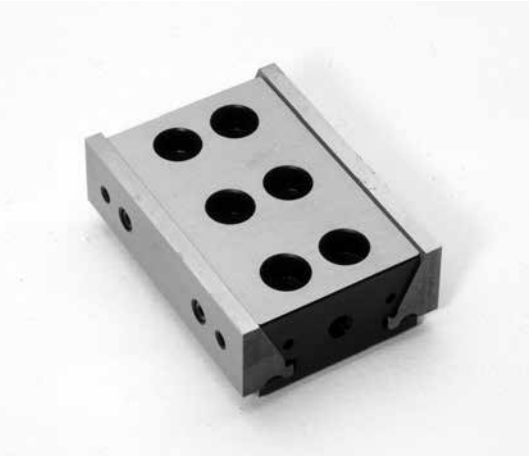

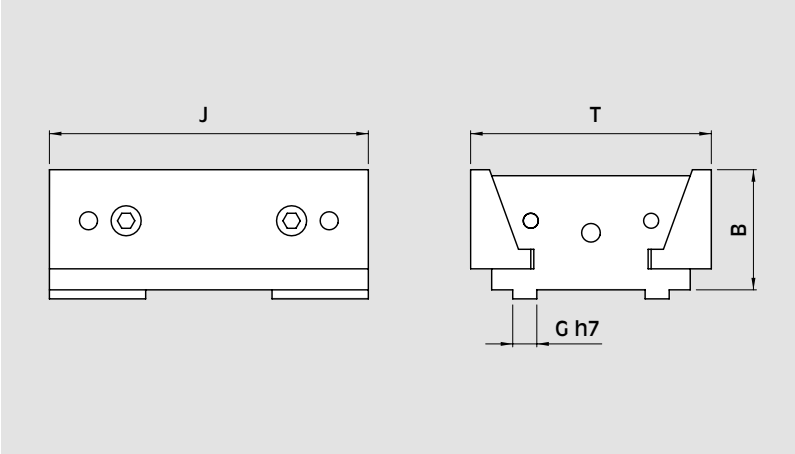

Id. No.	for type	B mm	G mm	J mm	T mm	Weight kg
58 11 72 10	TC 110 x ...	40	8	110	80	2,2
58 12 72 10	TC 150 x ...	50	12	150	108	5
58 13 72 10	TC 200 x ...	70	14	200	194	11,6

TCt complete extension element

with pair of positioning keys h6 (by choice)

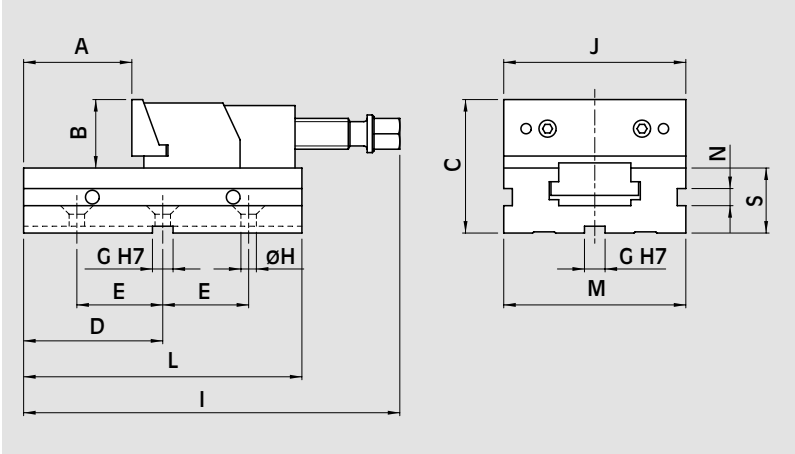

Id. No.	for type	A mm	B mm	C mm	D mm	E mm	G mm	H mm	I mm	J mm	L mm	M mm	N mm	S mm	Weight kg
58 01 71 10	TCt 110 x ...	60	40	78	81	50	12	9	220	110	162	110	10	38	6,2
58 02 71 10	TCt 150 x ...	100	50	98	114	75	18	12,5	295	150	228	150	13	48	15,1
58 03 71 10	TCt 200 x ...	120	70	138	150	100	18	12,5	390	200	300	200	15,5	68	39,2

TC base with fixed support with jaw

complete with pair of positioning keys h6 (by choice)

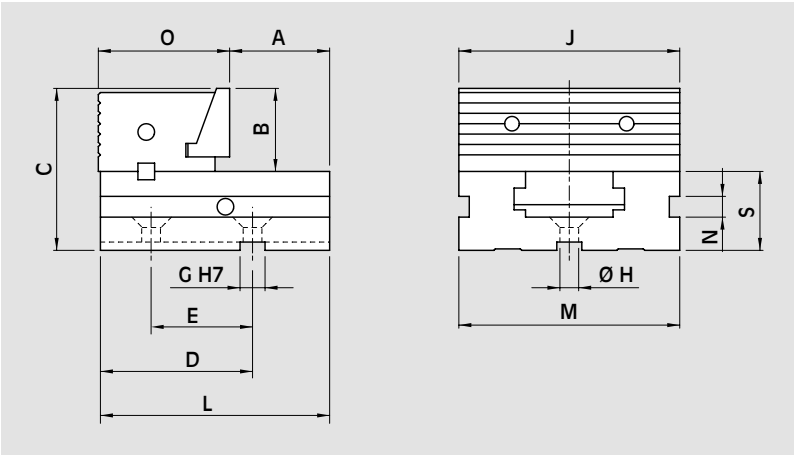

Id. No.	for type	A mm	B mm	C mm	D mm	E mm	G mm	H mm	J mm	L mm	M mm	N mm	O mm	S mm	Weight kg
58 01 70 10	TCt 110	58	40	78	80	50	12	9	110	120	110	10	63	38	4
58 02 70 10	TCt 150	81	50	98	114	75	18	12,5	150	165	150	13	85	48	9
58 03 70 10	TCt 200	82	70	138	149	100	18	12,5	200	205	200	15,5	123	68	28

TC base with double fixed support with jaw

complete with pair of positioning keys h6 (by choice)

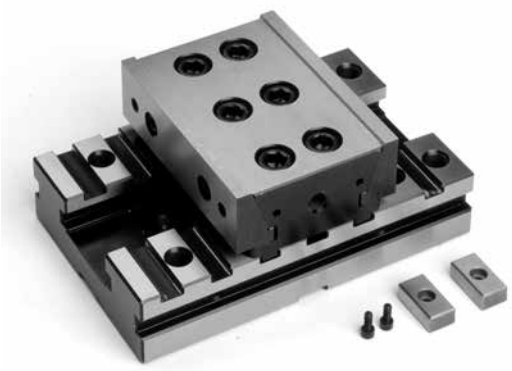

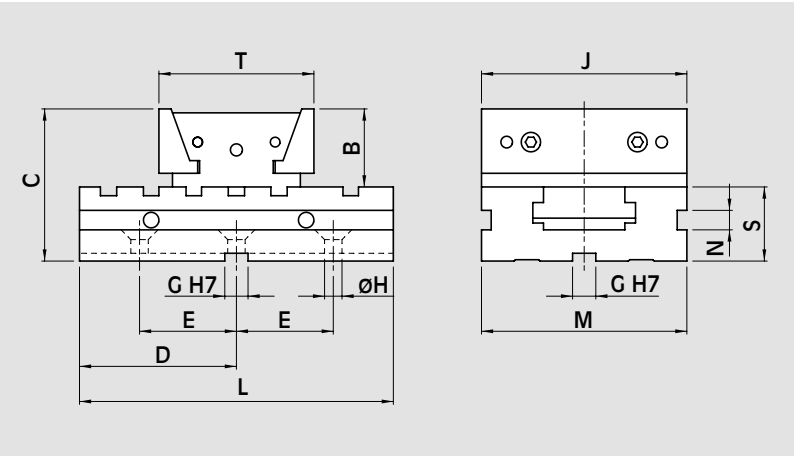

Id. No.	for type	B mm	C mm	D mm	E mm	G mm	H mm	J mm	L mm	M mm	N mm	S mm	T mm	Weight kg
58 11 70 10	TCt 110 x ...	40	78	81	50	12	9	110	162	110	10	38	80	5,6
58 12 70 10	TCt 150 x ...	50	98	114	75	18	12,5	150	228	150	13	48	108	13,5
58 13 70 10	TCt 200 x ...	70	138	150	100	18	12,5	200	300	200	15,5	68	194	34,7

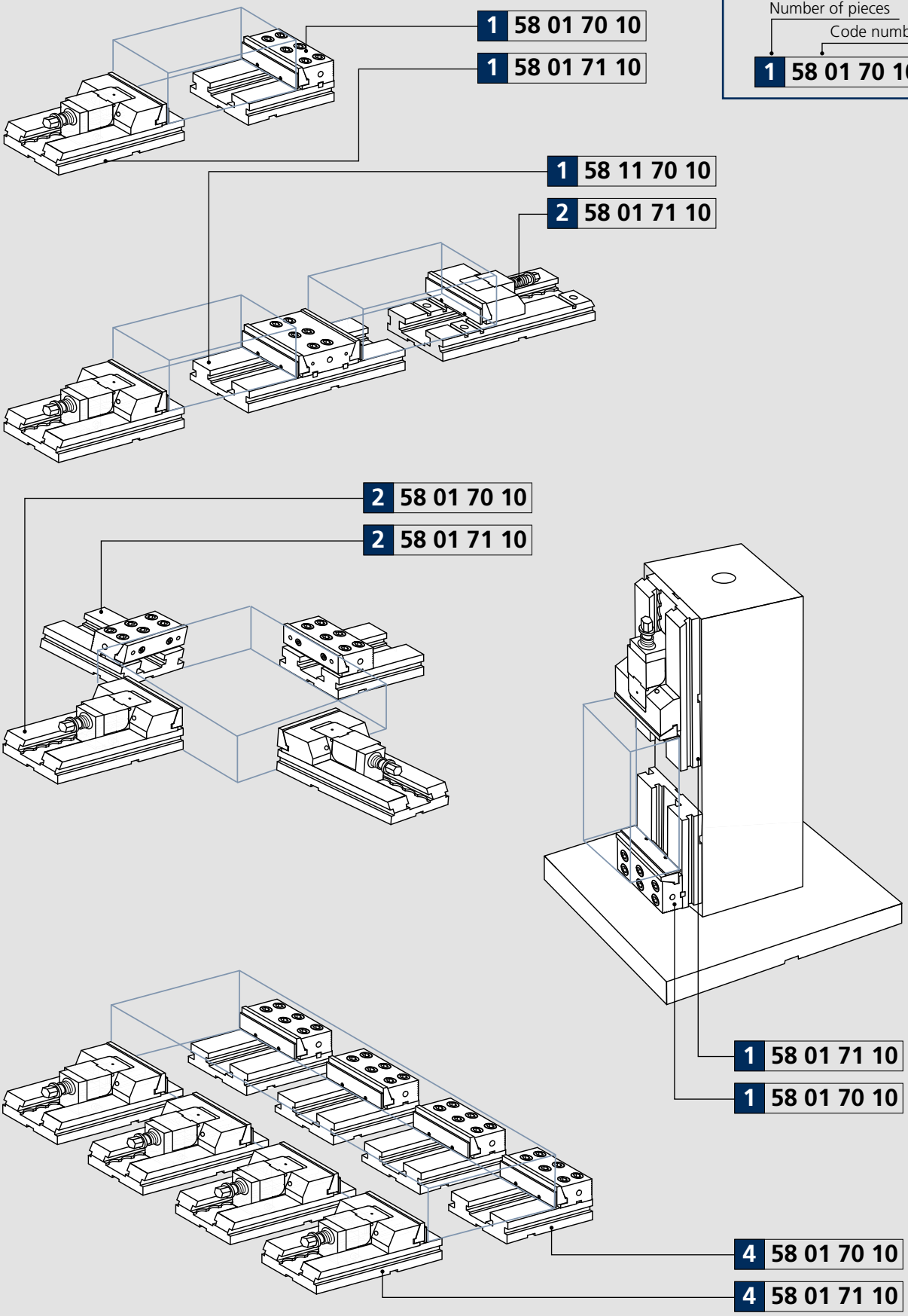
Examples
Number of pieces
Code number
1 58 01 70 10
1 58 01 70 10
1 58 01 71 10
1 58 11 70 10
2 58 01 71 10
2 58 01 70 10
2 58 01 71 10
1 58 01 71 10
1 58 01 70 10
4 58 01 70 10
4 58 01 71 10

MVS-TCt

Modular vertical clamping system

Vertical clamping system complete with:
4 clamping equipment TCt
1 column
1 base for vertical system TCt
4 pair of CLAK parallels
4 covers for protection of the screws
4 rigid slide-ways
4 floating slide-ways (for raw workpieces)
4 work stops
4 wrenches
eye bolt for lifting,
wooden packing case

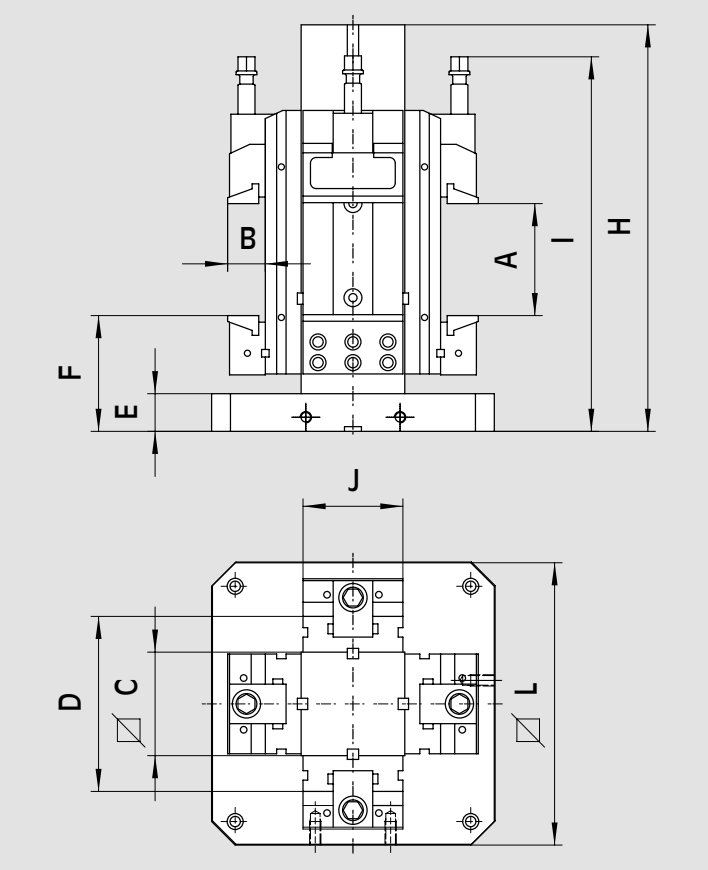

Id. No.	for type	A mm	B mm	C mm	D mm	E mm	F mm	H mm	I mm	J mm	L mm	Weight kg
77 58 21 11	TCt 110 x 100	100	40	110	186	40	123	391	400	110	300	108
77 58 21 12	TCt 110 x 150	150	40	110	186	40	123	391	450	110	300	112
77 58 22 21	TCt 150 x 200	200	50	150	246	40	151	580	550	150	400	255
77 58 22 22	TCt 150 x 250	250	50	150	246	40	151	580	600	150	400	263
77 58 22 23	TCt 150 x 300	300	50	150	246	40	151	580	655	150	400	273
77 58 22 31	TCt 150 x 200	200	50	150	246	40	151	580	550	150	500	282
77 58 22 32	TCt 150 x 250	250	50	150	246	40	151	580	600	150	500	290
77 58 22 33	TCt 150 x 300	300	50	150	246	40	151	580	655	150	500	300
77 58 23 32	TCt 200 x 300	300	70	200	336	40	173	661	750	200	500	580

The modularity of the system combined with same other components offers many additional clamping solutions.

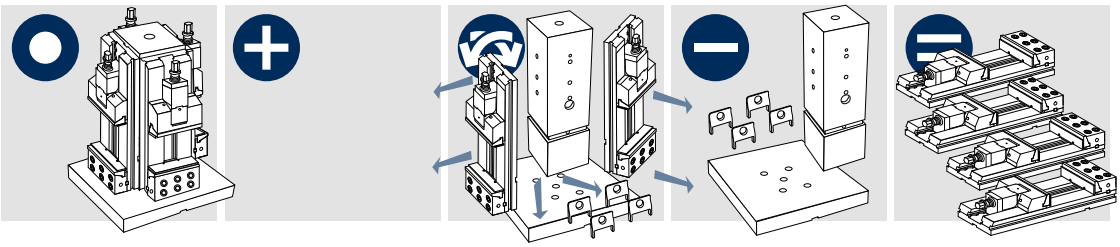

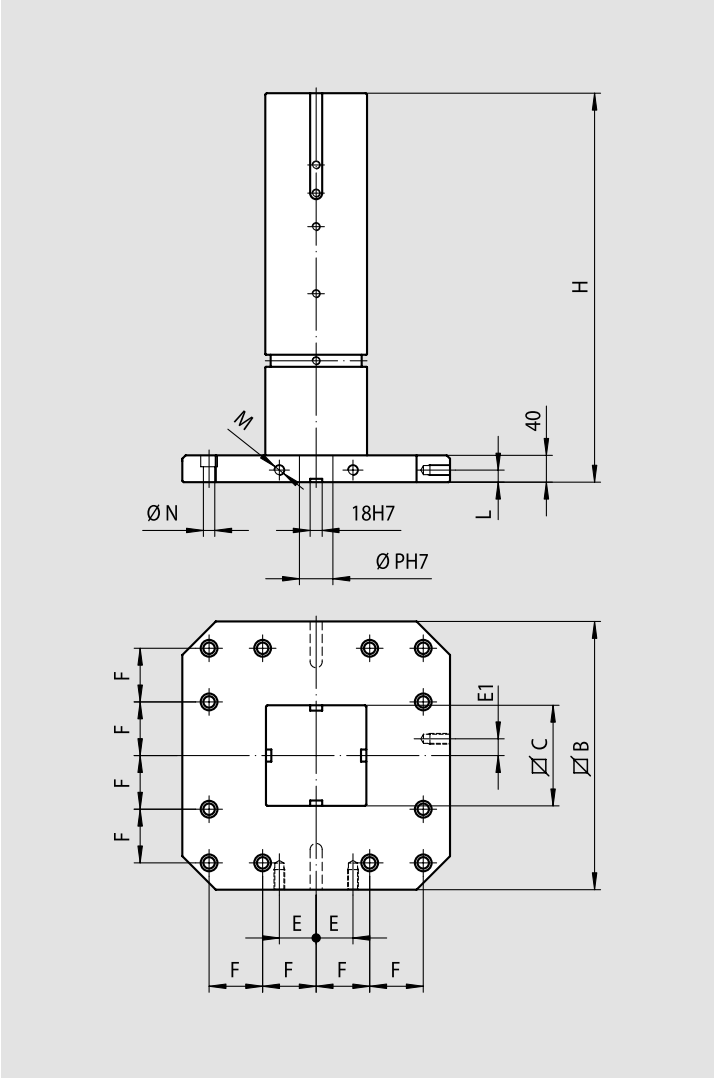

Id. No.	for type	B mm	C mm	E mm	E1 mm	F mm	H mm	L mm	M mm	N mm	P mm	Weight kg
58 21 80 10	TC 110	300	110	40	0	125	391	15	12	13	25	57
58 22 80 20	TC 150	400	150	55	25	80	580	18	16	17	50	142
58 22 80 30	TC 150	500	150	75	25	100	580	18	16	17	50	169
58 23 80 30	TC 200	500	200	75	25	100	661	18	16	17	50	266

Insert for vertical use

Id. No.	for type
58 21 33 00	TC 110 x …
58 22 33 00	TC 150 x …
58 23 33 00	TC 200 x …

VCS-TCt

Modular vertical clamping system

Vertical clamping system complete with:

4 clamping equipment TCt
1 cross cube
4 pair of CLAK parallels
4 covers for protection of the screws
4 rigid slide-ways
4 floating slide-ways (for raw workpieces)
4 work stops
4 wrenches
eye bolt for lifting
wooden packing case

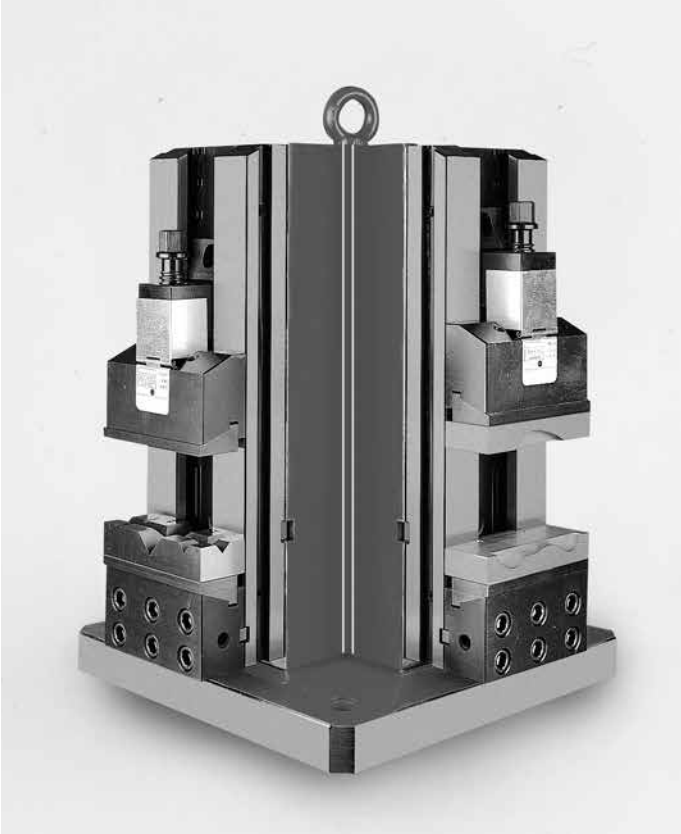

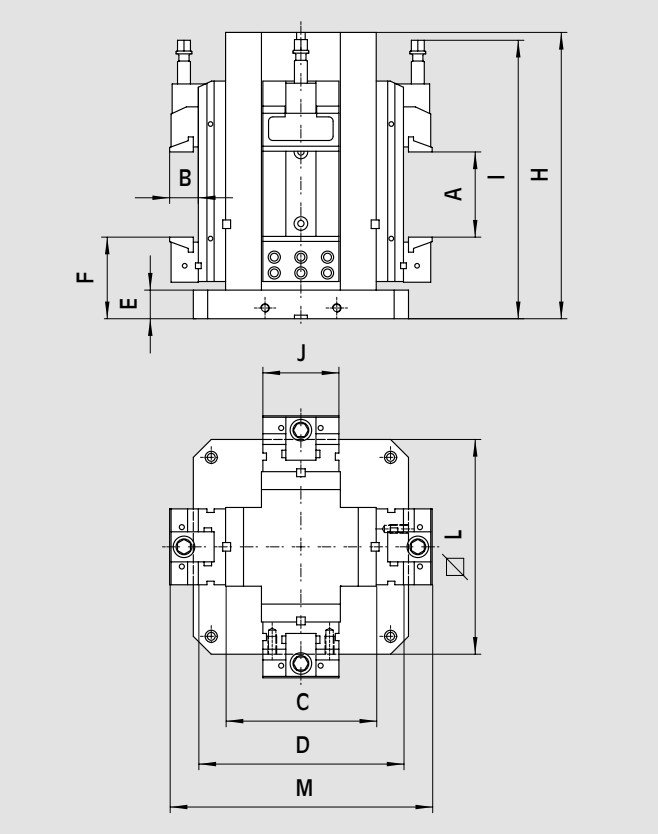

Id. No.	for type	A mm	B mm	C mm	D mm	E mm	F mm	H mm	I mm	J mm	L mm	M mm	Weight kg
77 58 51 11	TCt 110 x 100	100	40	210	286	40	114	382	390	110	300	366	121
77 58 51 12	TCt 110 x 150	150	40	210	286	40	114	382	440	110	300	366	125
77 58 52 21	TCt 150 x 200	200	50	300	396	40	145	580	545	150	400	496	320
77 58 52 22	TCt 150 x 250	250	50	300	396	40	145	580	595	150	400	496	328
77 58 52 23	TCt 150 x 300	300	50	300	396	40	145	580	652	150	400	496	338
77 58 52 31	TCt 150 x 200	200	50	300	396	40	145	580	545	150	500	496	348
77 58 52 32	TCt 150 x 250	250	50	300	396	40	145	580	595	150	500	496	356
77 58 52 33	TCt 150 x 300	300	50	300	396	40	145	580	652	150	500	496	366
77 58 53 42	TCt 200 x 300	300	70	350	486	45	182	670	760	200	630	626	675

Working example

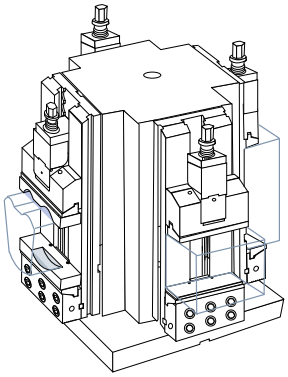

DVCS-TCt

Vertical clamping system complete with:

4 double clamping equipment TCt
1 cross cube XL
8 pair of CLAK parallels
8 covers for protection of the screws
8 rigid slide-ways
8 floating slide-ways (for raw workpieces)
8 work stops
8 wrenches
8 inserts for vertical use
eye bolt for lifting
wooden packing case

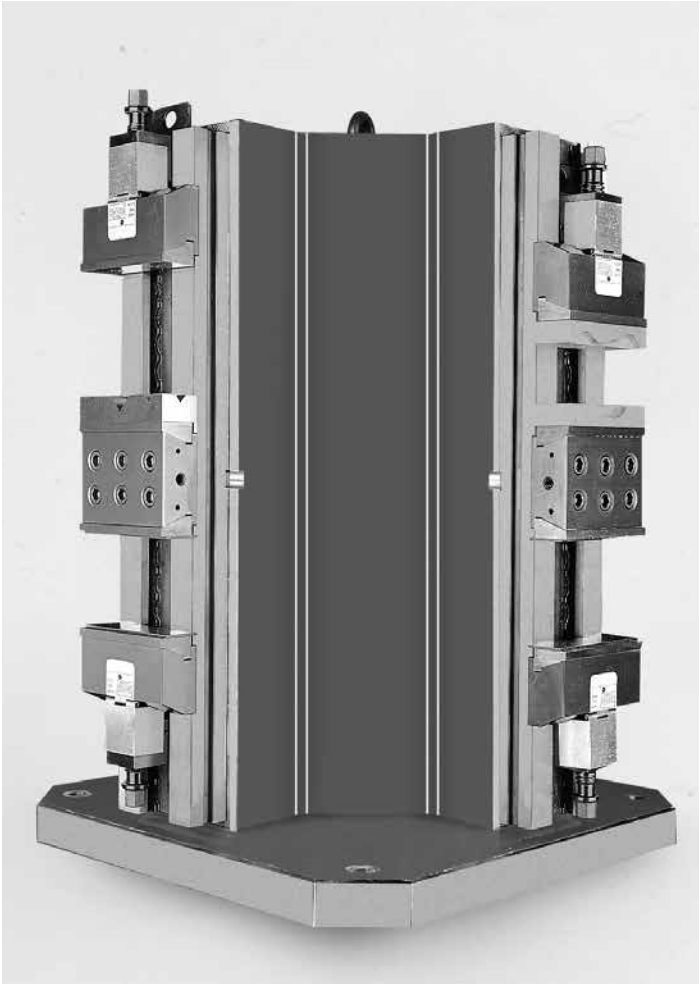

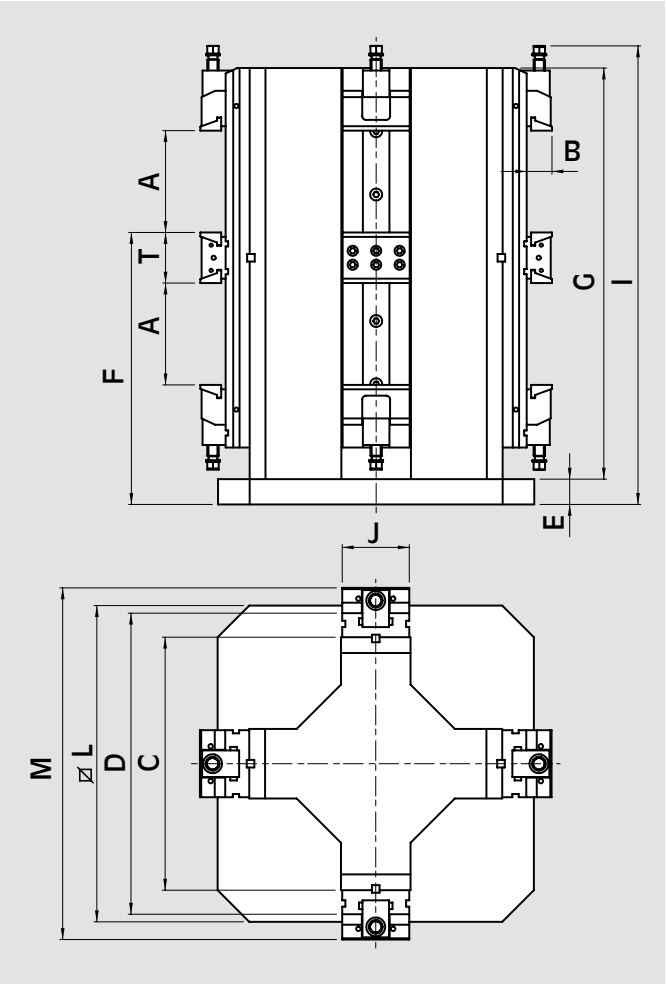

Id. No.	for type	A mm	B mm	C mm	D mm	E mm	F mm	G mm	I mm	J mm	L mm	M mm	T mm	Weight kg
77 58 61 01	DVCS-TCt 110 x 155	155	40	400	476	40	430	650	725	110	500	556	80	352
77 58 62 01	DVCS-TCt 150 x 195	195	50	550	646	45	515	795	890	150	630	746	108	647

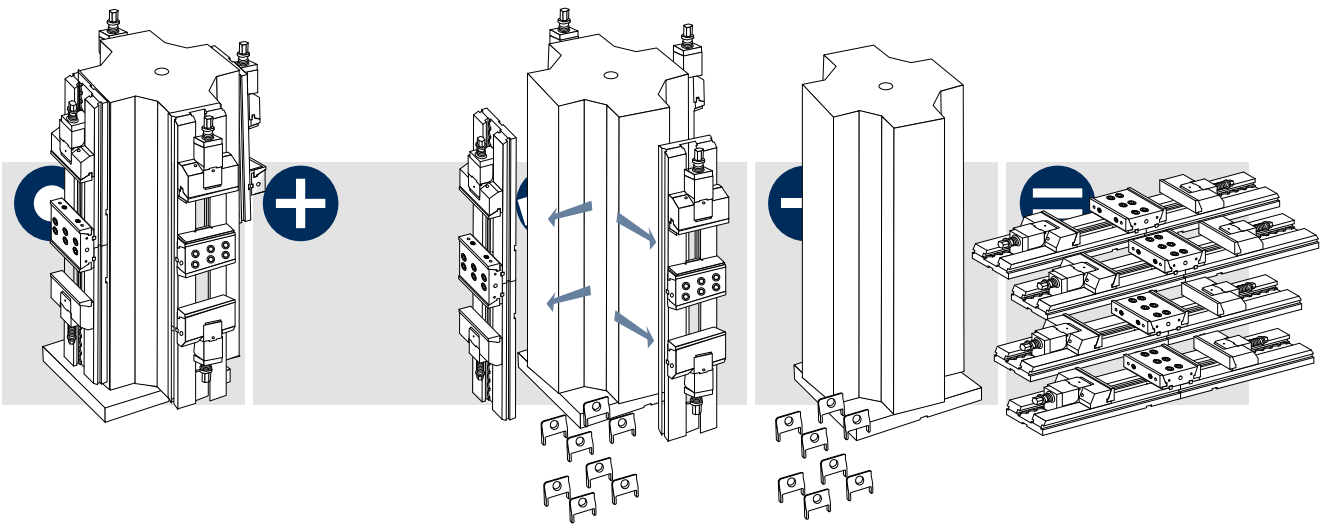

Cross cube for VCS-TCt

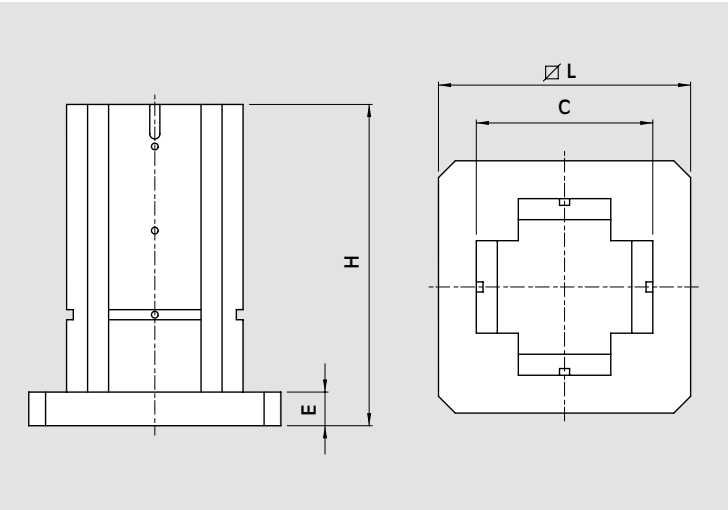

Id. No.	for type	C mm	E mm	H mm	L mm	Weight kg
58 51 80 10	TCt 110	210	40	382	300	75
58 52 80 20	TCt 150	300	40	580	400	212
58 52 80 30	TCt 150	300	40	580	500	240
58 53 80 30	TCt 200	350	40	670	500	305
58 53 80 40	TCt 200	350	45	670	630	363

Cross cube for DVCS-TCt

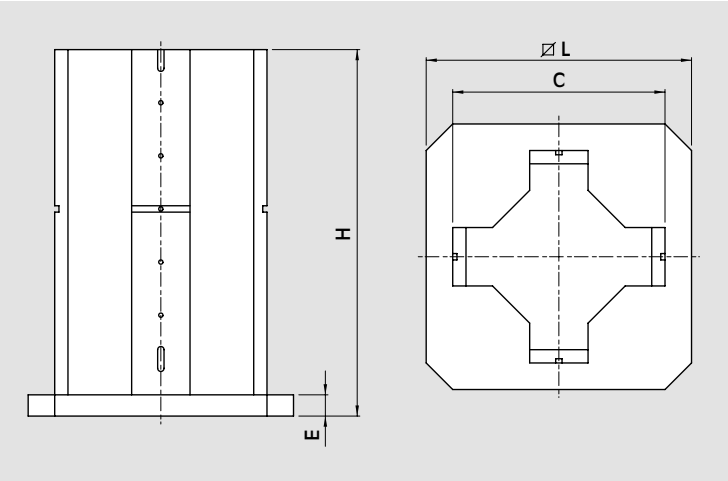

Id. No.	for type	C mm	E mm	H mm	L mm	Weight kg
58 61 80 00	DVCS-TCt 110 x ...	400	40	690	500	266
58 62 80 00	DVCS-TCt 150 x ...	550	45	840	630	458

Insert for vertical use

Id. No.	Model
58 21 33 00	VCS-TCt 110 x ...
58 22 33 00	VCS-TCt 150 x ...
58 23 33 00	VCS-TCt 200 x ...

Pair of grooved jaws

Id. No.	for type
58 01 44 09	TC 110 x …
58 02 44 09	TC 150 x …
58 03 44 09	TC 200 x …

Insert for vertical use
(MVS,VCS,DVCS)

Id. No.	for type
58 21 33 00	TC 110 x …
58 22 33 00	TC 150 x …
58 23 33 00	TC 200 x …

Torque wrench

Id. No.	for type
51 50 10 01	TC 110 x …
51 50 10 02	TC 150 x …
51 50 10 03	TC 200 x …

Accessories for TC clamping equipment

Air/oil block

complete with cylinder and tang

Id. No.	for type
58 01 75 00	TC 110 x …
58 02 75 00	TC 150 x …
58 03 75 00	TC 200 x …

Air/oil foot pump

with joining pipe cm 180 (71”) and complete block for air/oll application.

Id. No.	for type
77 58 01 51	TC 110 x …
77 58 02 51	TC 150 x …
77 58 03 51	TC 200 x …

Air/oil foot pump

Id. No.	for type
71 66 03 05	TC 110 x …
71 66 03 05	TC 150 x …
71 66 03 05	TC 200 x …

Air/oil manual pump

Id. No.	for type
71 66 03 15	TC 110 x …
71 66 03 15	TC 150 x …
71 66 03 15	TC 200 x …

Pressure-gauge

Id. No.	for type
51 43 12 51	TC 110 x …
51 43 12 51	TC 150 x …
51 43 12 51	TC 200 x …

Joining pipe M. 1,80 (71")

Id. No.	for type
71 70 87 13	TC 110 x ...
71 70 87 13	TC 150 x ...
71 70 87 13	TC 200 x ...

Joining pipe M. 3 (118")

Id. No.	for type
71 70 87 14	TC - 110
71 70 87 14	TC - 150
71 70 87 14	TC - 200

Joining pipe M. 6 (236")

Id. No.	for type
71 70 87 15	TC 110 x ...
71 70 87 15	TC 150 x ...
71 70 87 15	TC 200 x ...

Pair of clamps

complete with screws and T-nuts

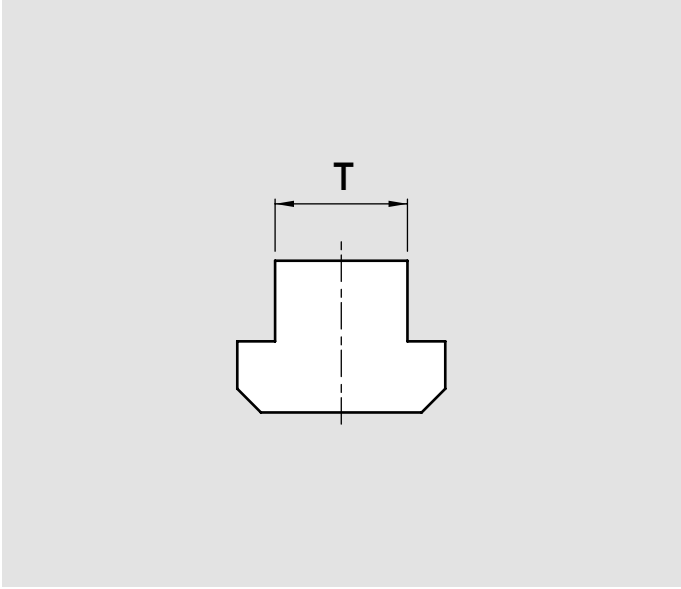

Code for T-slots						for type
mm 12	mm 14	mm 16	mm 18	mm 20	mm 22	
58 01 27 92	58 01 27 93	58 01 27 94	58 01 27 95	58 01 27 96	58 01 27 97	TCt 110 x ...
58 02 27 92	58 02 27 93	58 02 27 94	58 02 27 95	58 02 27 96	58 02 27 97	TCt 150 x ...
58 03 27 92	58 03 27 93	58 03 27 94	58 03 27 95	58 03 27 96	58 03 27 97	TCt 200 x ...

Pair of T-nuts

Complete with screws at 45°

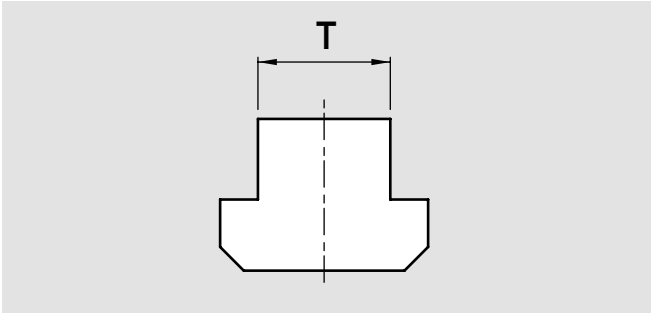

Code for T-slots						for type
mm 12	mm 14	mm 16	mm 18	mm 20	mm 22	
58 01 25 92	58 01 25 93	58 01 25 94	58 01 25 95	58 01 25 96	58 01 25 97	TCt 110 x ...
58 02 25 92	58 02 25 93	58 02 25 94	58 02 25 95	58 02 25 96	58 02 25 97	TCt 150 x ...
58 03 25 92	58 03 25 93	58 03 25 94	58 03 25 95	58 03 25 96	58 03 25 97	TCt 200 x ...

Pair of positioning keys

with special dimensions

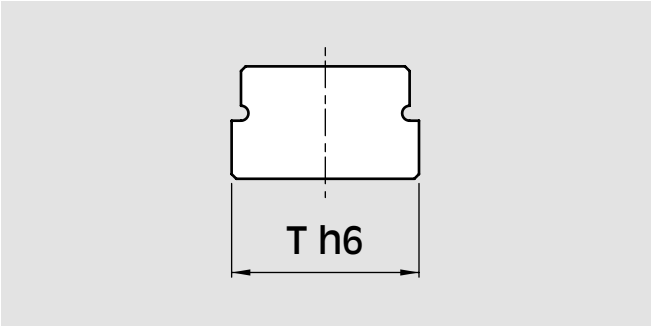

Code for T-slots						for type
mm 12	mm 14	mm 16	mm 18	mm 20	mm 22	
-	58 01 13 93	58 01 13 94	58 01 13 95	58 01 13 96	58 01 13 97	TCt 110 x ...
58 02 13 92	58 02 13 93	58 02 13 94	-	58 02 13 96	58 02 13 97	TCt 150 x ...
58 02 13 92	58 02 13 93	58 02 13 94	-	58 02 13 96	58 02 13 97	TCt 200 x ...

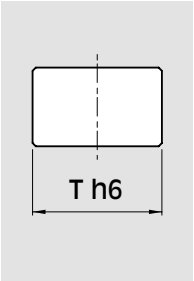

Pair of standard positioning keys

Id. No.	Model	T h6 mm
58 01 13 92	TCt - 110	12
58 02 13 95	TCt - 150	18
58 02 13 95	TCt - 200	18

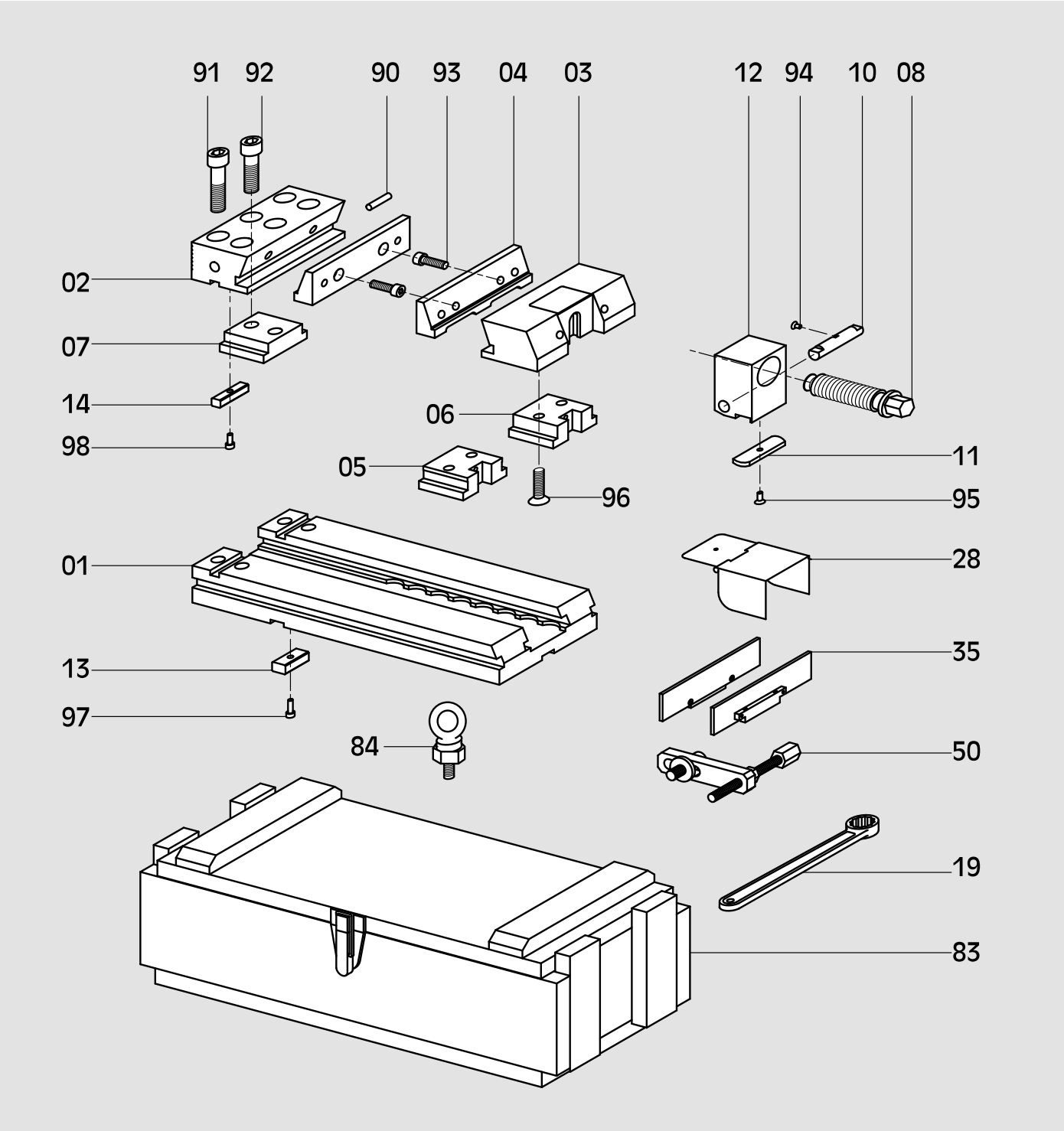

Description

01.....Base
02.....Fixed support
03.....Moveable support
04.....Jaws
05.....Floating slide-way
06.....Rigid slide-way
07.....Fixed slide-way
08.....Clamping screws
10.....Contrast pin
11.....Positioning plate
12.....Block for clamping screw
13.....Positioning key
14.....Key for support
19.....Wrench
28.....Cover for protection of the screw
35.....Pair of CLAK parallels
50.....Work stop
83.....Wooden packing case
84.....Eye bolt
90.....Rubber pad
91.....Screw TCEI
92.....Screw TCEI
93.....Screw TCEI
94.....Screw TPS
95.....Screw TPS
96.....Screw TPS
97.....Screw TCEI
98.....Screw TCEI

Spare parts for TC clamping equipment

Pair of smooth jaws

Id. Nr.	for type
58 01 04 09	TC 110 x ...
58 02 04 09	TC 150 x ...
58 03 04 09	TC 200 x ...

Fixed support with jaw

Id. Nr.	for type
58 01 72 10	TC 110 x ...
58 02 72 10	TC 150 x ...
58 03 72 10	TC 200 x ...

Moveable support with jaw

Id. Nr.	for type
58 01 73 10	TC 110 x ...
58 02 73 10	TC 150 x ...
58 03 73 10	TC 200 x ...

Floating slide-way

Id. Nr.	for type
58 01 05 00	TC 110 x ...
58 02 05 00	TC 150 x ...
58 03 05 00	TC 200 x ...

Rigid slide-way

Id. Nr.	for type
58 01 06 00	TC 110 x ...
58 02 06 00	TC 150 x ...
58 03 06 00	TC 200 x ...

Fixed slide-way

Id. Nr.	for type
58 01 07 00	TC 110 x ...
58 02 07 00	TC 150 x ...

Pair of keys for fixed support

Id. Nr.	for type	
58 01 14 09	TC 110 x …	
58 02 14 09	TC 150 x …	
58 03 14 09	TC 200 x …	

Wrench

Id. Nr.	for type	
58 01 19 00	TC 110 x …	Hexagon 18
58 02 19 00	TC 150 x …	Hexagon 22
58 03 19 00	TC 200 x …	Hexagon 27

Complete clamping block (new type)

Id. Nr.	for type	
58 01 74 11	TC 110 x …	
58 02 74 11	TC 150 x …	
58 03 74 11	TC 200 x …	

Block for clamping screw (new type)

Id. Nr.	for type	
58 01 12 12	TC 110 x …	
58 02 12 12	TC 150 x …	
58 03 12 12	TC 200 x …	

Spare parts for TC clamping equipment

Clamping screw

Id. No.	for type
58 01 08 12	TC 110 x …
58 02 08 12	TC 150 x …
58 03 08 12	TC 200 x …

Contrast pin

Id. No.	for type
58 01 10 01	TC 110 x …
58 02 10 01	TC 150 x …
58 03 10 01	TC 200 x …

Positioning plate

Id. No.	for type
58 01 11 11	TC 110 x …
58 02 11 11	TC 150 x …
58 03 11 11	TC 200 x …

Work stop

Id. No.	for type
58 01 50 00	TC 110 x ...
58 02 50 00	TC 150 x ...
58 03 50 00	TC 200 x ...

Cover for protection of the screw

Id. No.	for type
58 01 28 10	TC 110 x ...
58 02 28 10	TC 150 x ...
58 03 28 10	TC 200 x ...

Block for cylinder

Id. No.	for type
58 01 12 20	TC 110 x ...
58 02 12 20	TC 150 x ...
58 03 12 20	TC 200 x ...

Tang for cylinder

Id. No.	for type
58 01 16 00	TC 110 x …
58 02 16 00	TC 150 x …
58 03 16 00	TC 200 x …

Can of oil

Id. No.	for type
10 72 99 40	TC 110 x …
10 72 99 40	TC 150 x …
10 72 99 40	TC 200 x …

MC

3.1

Modular clamping equipment

Page 3.1.3

MC
Modular clamping equipment

Page 3.1.4

MC-XL
Modular clamping equipment

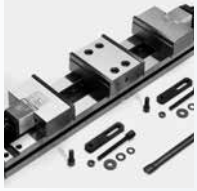

Page 3.1.5

DCS-MC
Double clamping equipment

Page 3.1.6

MC extension element
Clamping moduls

Page 3.1.6

MC complete extension element
Clamping moduls

Page 3.1.6

Supporto a doppia ganascia fissa MC
Moduli di bloccaggio

Page 3.1.7

MC base with fixed support with jaw
Clamping moduls

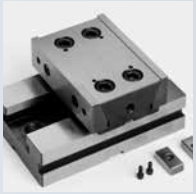

Page 3.1.7

MC base with double fixed support with jaw
Clamping moduls

Page 3.1.8

MVS-MC
Modular vertical clamping system

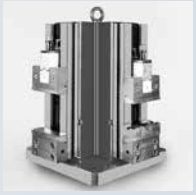

Page 3.1.10

VCS-MC
Modular vertical clamping system

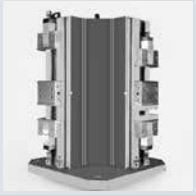

Page 3.1.11

DVCS-MC
Modular vertical double clamping system

Page 3.1.13

MC
Accessories and spare parts

MC is ...

MODULAR

We use the true definition of the term modular; product which is composed of separate or separable elements. With these separate or separable elements we can achieve many different clamping solutions.
The only different component of these clamping solutions is the base.
The base length determines the clamping capacity while all other components remain the same.
Fixed and movable vise jaws can be used with any base configuration, offering the most flexible workholding solutions available.
This modular system allows the user to realize the maximum number of workholding combinations with the minimum investment in equipment.

DURABILITY

All components are constructed from oversize steel profiles ensuring the equipment is exceptionally sturdy and can provide the user with optimal performance.
Wear parts are special treated to achieve a surface hardness of 50/60 HRC.
All non-ground surfaces are burnished to protect against corrosion.

QUICK-CHANGE

A patented system allows quick repositioning of the clamping jaws.
The clamping jaw is lifted slightly from the base and shuttled to the next clamping position then lowered into place.
Part changeovers and size changes can be made quickly and easely.

SAFE

The jaws of the equipment have a descending movement of 0.2 mm, therefore, upon closing, they drag the piece against the support base of the same.
In addition to precision, this system guarantees the absence of vibrations as the adherence of the piece to the support surface is constantly maintained.

VERSATILITY

The standard CLAK system allows the quick-change of parallels, angular parallels, soft jaws and “V “jaws in order to machine any workpiece.

MANAGEABLE

The weight of 25 kg (55 lb.) for the 150 mm. x 200 mm. (6”x 8”) vise and simple clamping system allow for easy movement from one machine tool to another.

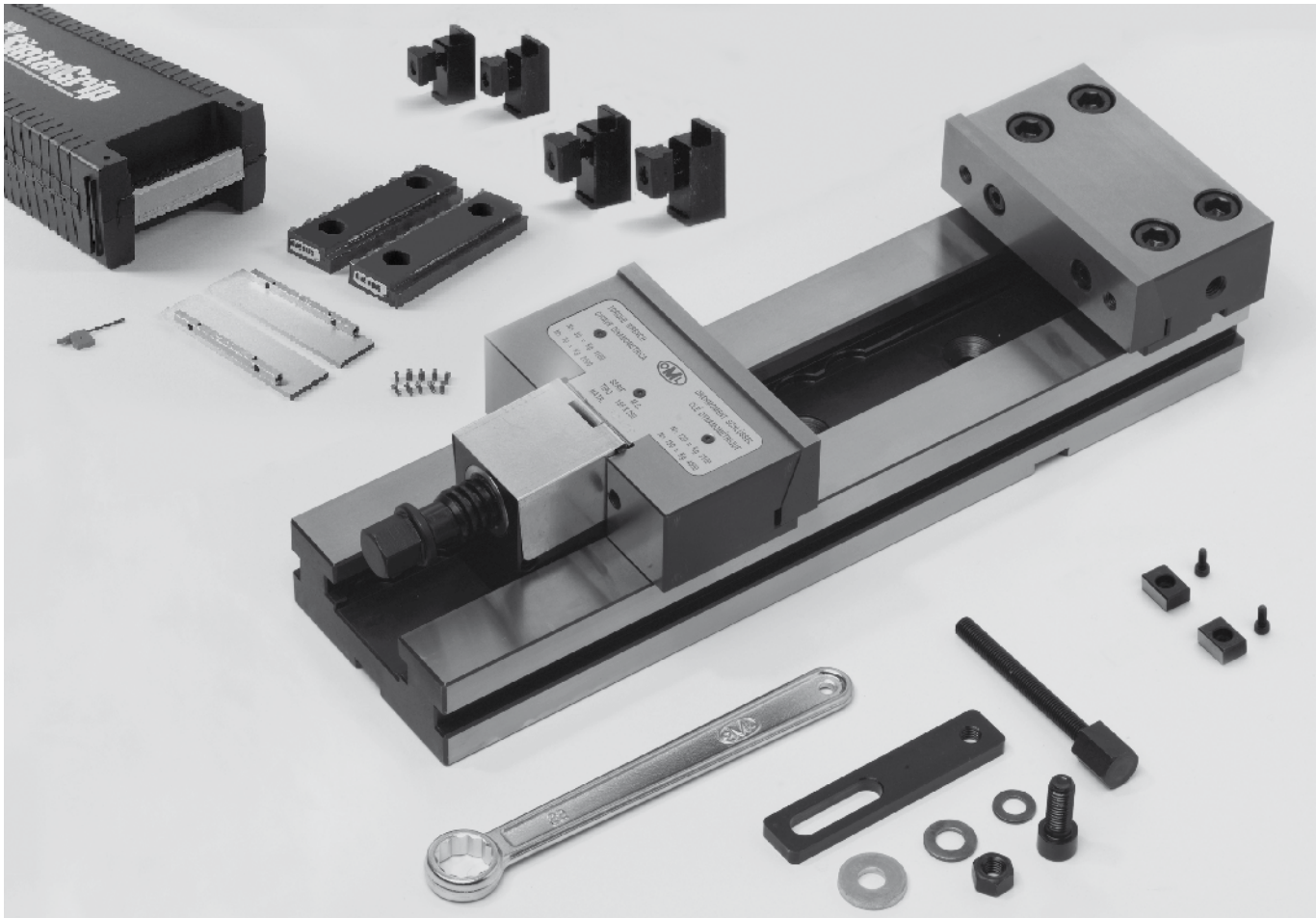

Clamping equipment **MC** complete with: wrench, rigid slide way (floating slide-way at request for raw workpiece), work stop, pair of positioning keys **h6**, cover for protection of the screw, 4 clamps, **pair of jaws without tungsten carbide coating, 1 pair of parallels (PP), 1 wrench TORX T9 and 1 kit of 10 screws**, cardboard box.
SinterGrip inserts **are not included**: ask to your local dealer.

NOTE: SinterGrip jaws see page S.15

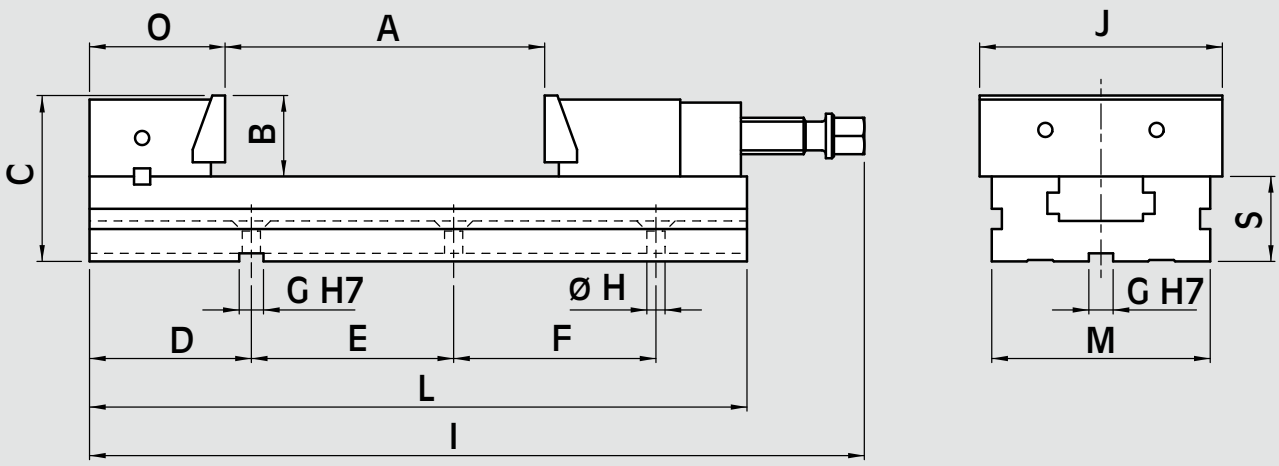

Id. No.	Type	A	B	C	D	E	F	G	H	I	J	L	M	S	Weight
		mm	mm	mm	mm	mm	mm	mm	mm	mm	mm	mm	mm	mm	Kg
33580651	MC 150 x 200	200	50	102	120	200	-	18	12,5	482	150	415	128	52	25,5
33580652	MC 150 x 250	250	50	102	120	100	100	18	12,5	532	150	465	128	52	27,5
33580653	MC 150 x 300	300	50	102	120	100	100	18	12,5	587	150	520	128	52	30,4
33580751	MC 200 x 300	300	70	136	150	150	150	18	12,5	656	200	570	168	66	66,0
33580752	MC 200 x 400	400	70	136	150	200	200	18	12,5	756	200	670	168	66	68,0

MC-XL

Clamping equipment

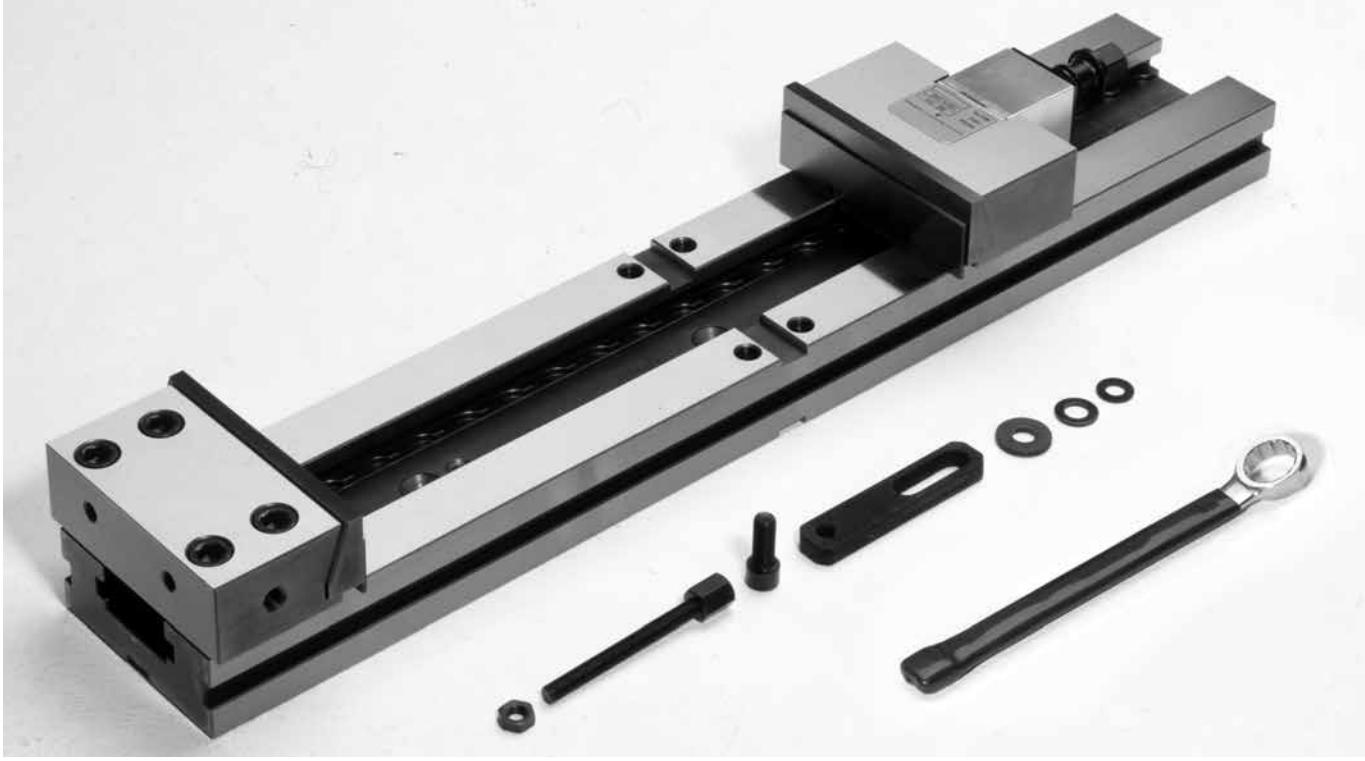

Clamping equipment MC-XL complete with wrench, work stop, rigid slide-way, (floating slide-way at request for raw workpiece), pair of positioning keys, pair of **CLAK** parallels, cover for protection of the screw, cardboard box.

NOTE: SinterGrip jaws see page S.15

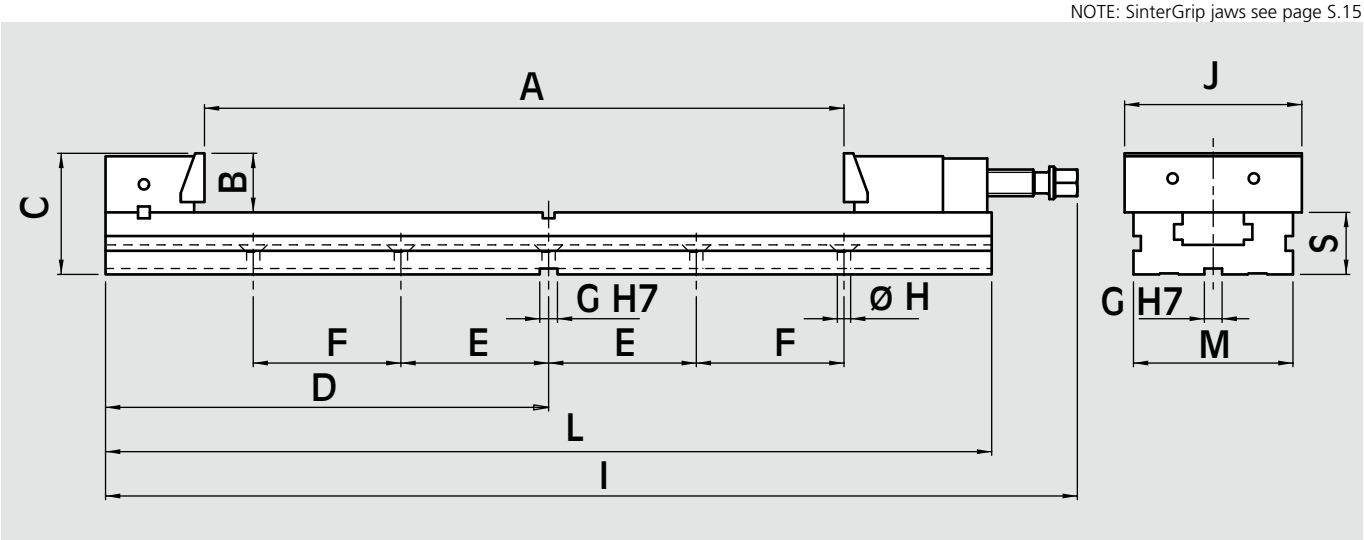

Id. No.	for type	A mm	B mm	C mm	D mm	E mm	F mm	G mm	H mm	I mm	J mm	L mm	M mm	S mm	Weight kg
77 58 06 04	MC 150 x 545	545	50	102	379	100	150	18	12,5	828	150	758	128	52	37
77 58 06 05	MC 150 x 655	655	50	102	439	100	200	18	12,5	938	150	878	128	52	41

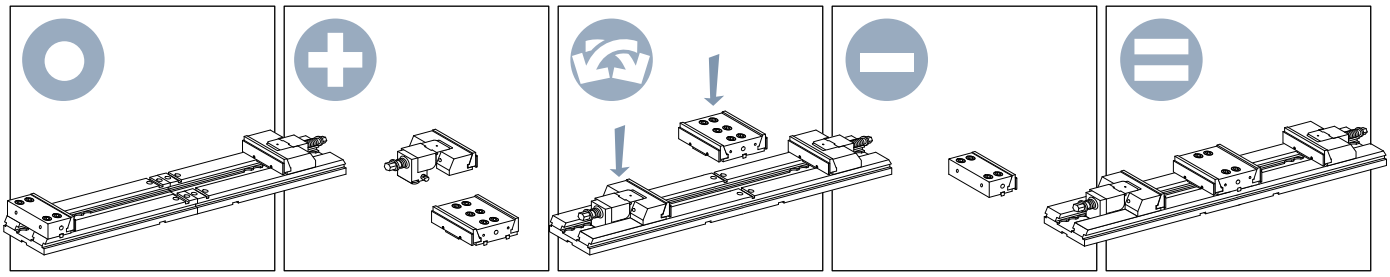

DCS-MC

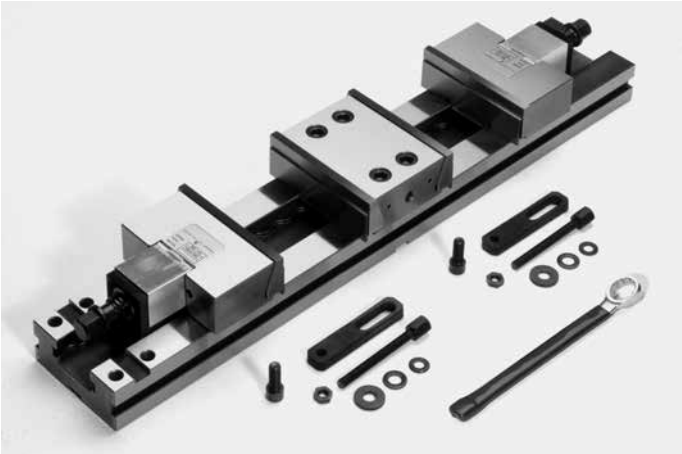

Double clamping equipment DCS-MC complete with:
1 wrench,
2 work stops,
2 rigid slide-ways, (floating slide-way at request for raw workpiece),
1 pair of positioning keys,
2 pair of CLAK parallels,
2 covers for protection of the screw,
cardboard box.

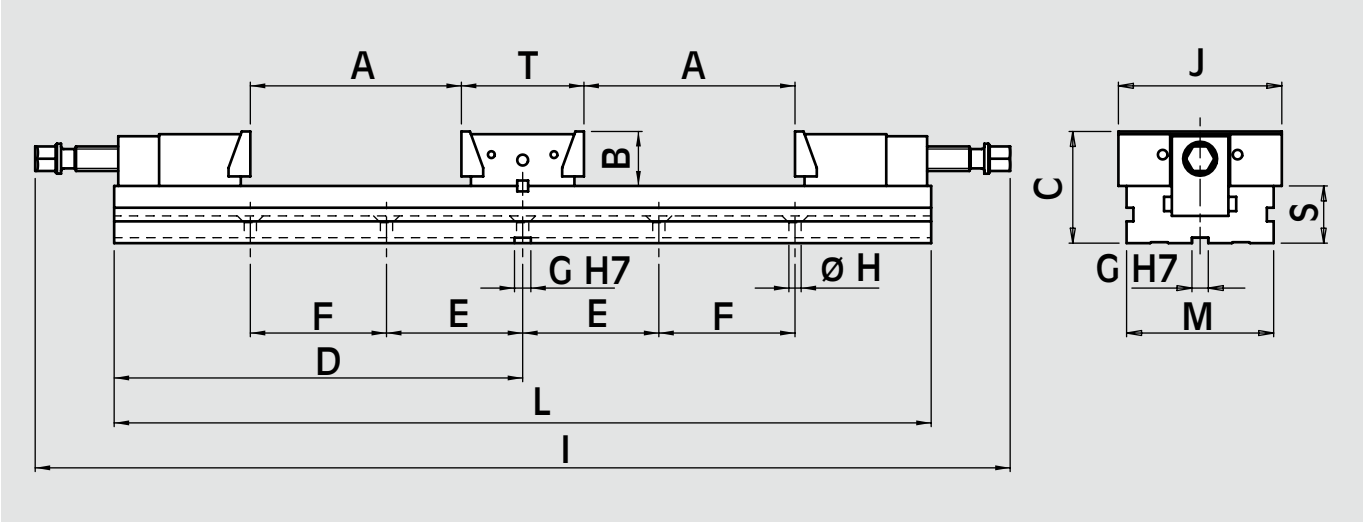

Id. No.	for type	A mm	B mm	C mm	D mm	E mm	F mm	G mm	H mm	I mm	J mm	L mm	M mm	S mm	T mm	Weight kg
77 58 16 01	MC 150 x 200	200	50	102	379	100	150	18	12,5	897	150	758	128	52	103	44
77 58 16 02	MC 150 x 250	250	50	102	439	100	200	18	12,5	997	150	878	128	52	103	48

The modularity of the system combined some other component offers many additional clamping solutions.

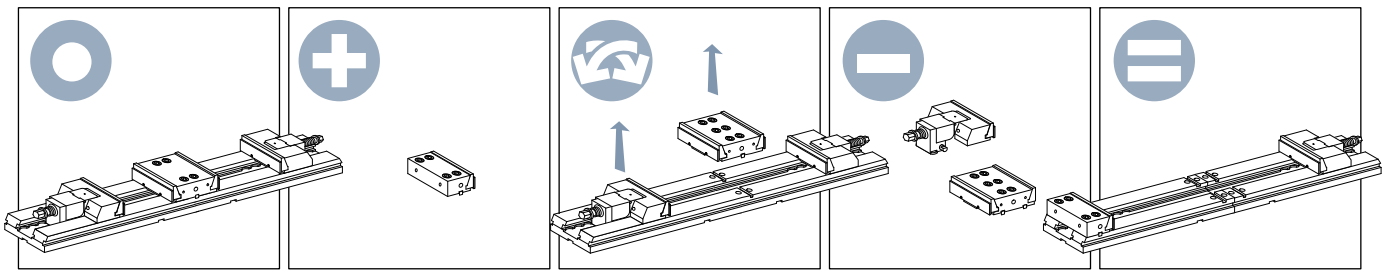

MC extension element with pair of positioning keys

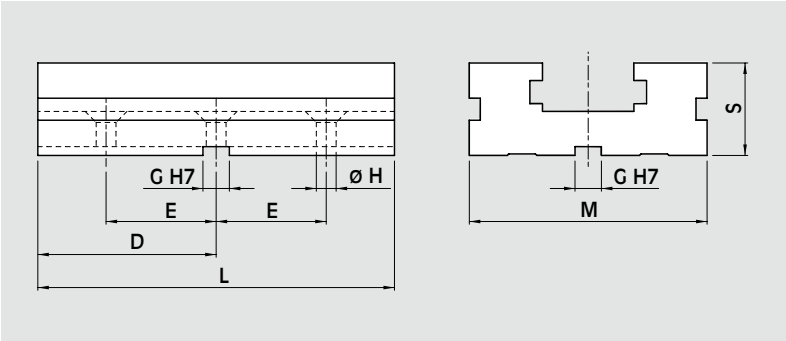

Id. No.	for type	D mm	E mm	G mm	H mm	L mm	M mm	S mm	Weight kg
58 06 17 00	MC 150 x ...	114	75	18	12,5	228	128	52	8
58 07 17 00	MC 200 x ...	140	100	18	12,5	280	168	66	18

MC double fixed support with jaw

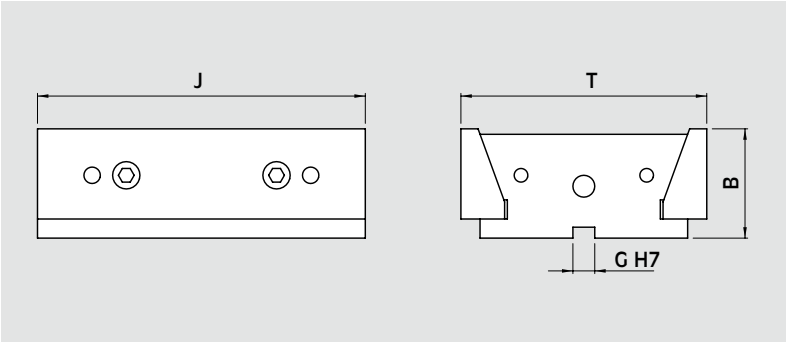

Id. No.	for type	B mm	G mm	J mm	T mm	Weight kg
58 16 72 10	MC 150 x ...	50	12	150	103	5
58 17 72 10	MC 200 x ...	70	18	200	140	15

MC complete extension element
with pair of positioning keys

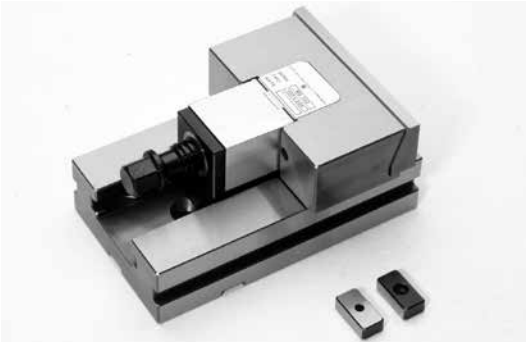

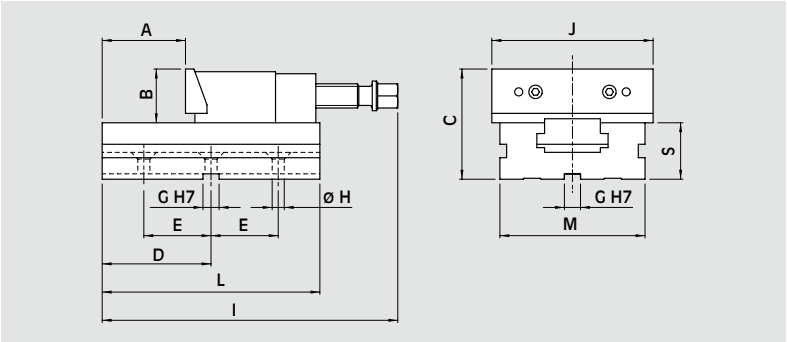

Id. No.	for type	A mm	B mm	C mm	D mm	E mm	G mm	H mm	I mm	J mm	L mm	M mm	S mm	Weight kg
58 06 71 10	MC 150	100	50	102	114	75	18	12,5	295	150	228	128	52	14,5
58 07 71 10	MC 200	120	70	136	140	100	18	12,5	370	200	280	168	66	34,5

MC base with fixed support with jaw

complete with pair of positioning keys

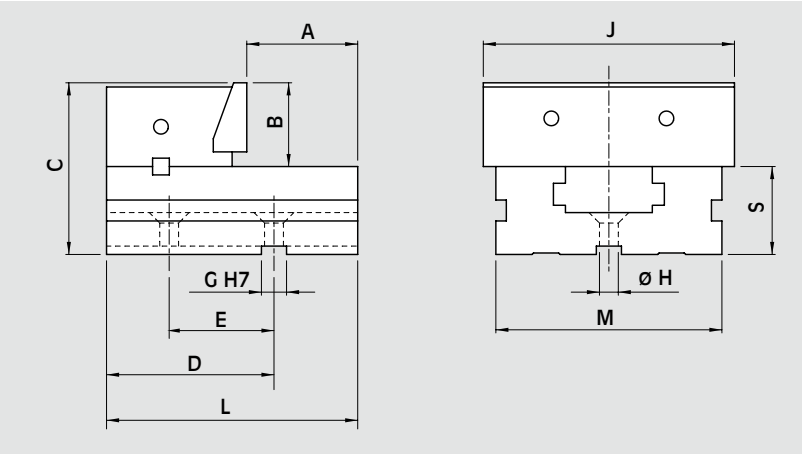

Id. No.	for type	A mm	B mm	C mm	D mm	E mm	G mm	H mm	J mm	L mm	M mm	S mm	Weight kg
58 06 70 10	MC 150	85	50	102	120	75	18	12,5	150	170	128	52	9,5
58 07 70 10	MC 200	96	70	136	150	100	18	12,5	200	205	168	66	22

MC base with double fixed support with jaw

complete with pair of positioning keys

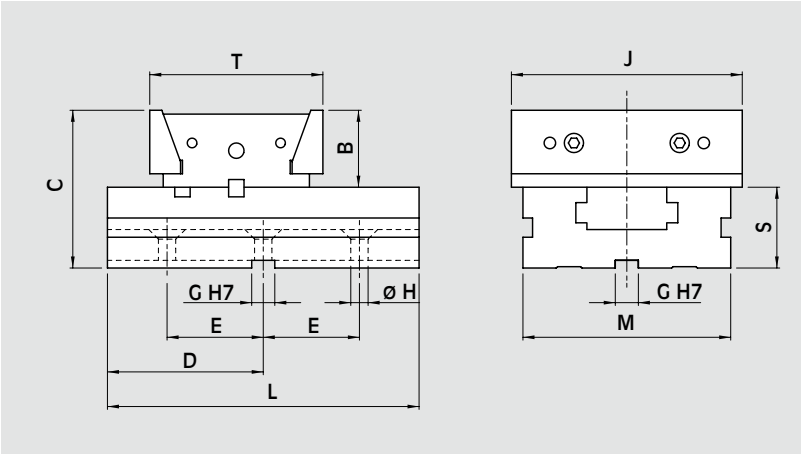

Id. No.	for type	B mm	C mm	D mm	E mm	G mm	H mm	J mm	L mm	M mm	S mm	T mm	Weight kg
58 16 70 10	MC 150	50	102	100	75	18	12,5	150	200	128	52	103	13
58 17 70 10	MC 200	70	136	125	100	18	12,5	200	250	168	66	140	40

Working example see page 2.17

MVS-MC

Modular vertical clamping systems

Vertical clamping system complete with:
4 clamping equipment MC
1 column
1 base for vertical system MC
4 pair of CLAK parallels
4 covers for protection for the screws
4 rigid slide-ways (floating slide-ways on request for raw work pieces)
4 work stops
4 wrenches
eye bolt for lifting,
wooden packing case

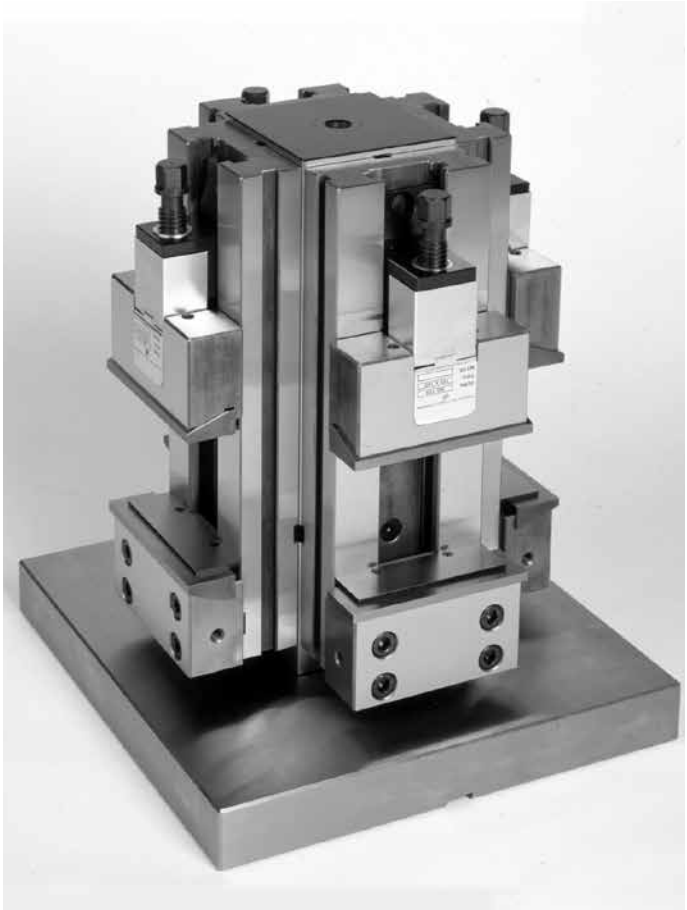

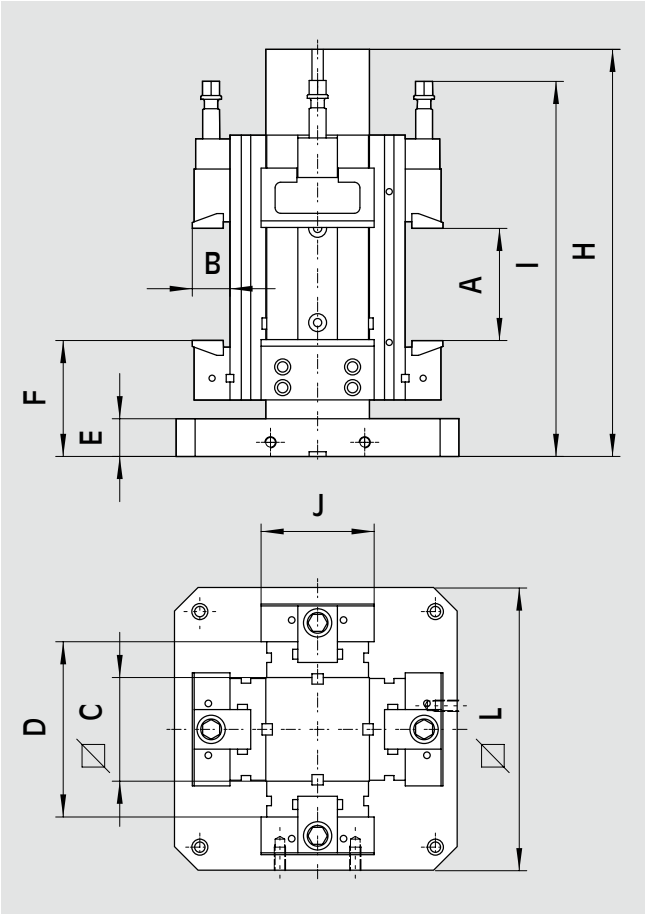

Id. No.	for type	A mm	B mm	C mm	D mm	E mm	F mm	H mm	I mm	J mm	L mm	Weight kg
77 58 26 21	MC 150 x 200	200	50	150	254	40	146	580	545	150	400	249
77 58 26 22	MC 150 x 250	250	50	150	254	40	146	580	595	150	400	257
77 58 26 23	MC 150 x 300	300	50	150	254	40	146	580	650	150	400	267
77 58 26 31	MC 150 x 200	200	50	150	254	40	146	580	545	150	500	276
77 58 26 32	MC 150 x 250	250	50	150	254	40	146	580	595	150	500	284
77 58 26 33	MC 150 x 300	300	50	150	254	40	146	580	650	150	500	294
77 58 27 31	MC 200 x 300	300	70	200	332	40	159	661	711	200	500	535

Working example see page 2.18

MVS-MC

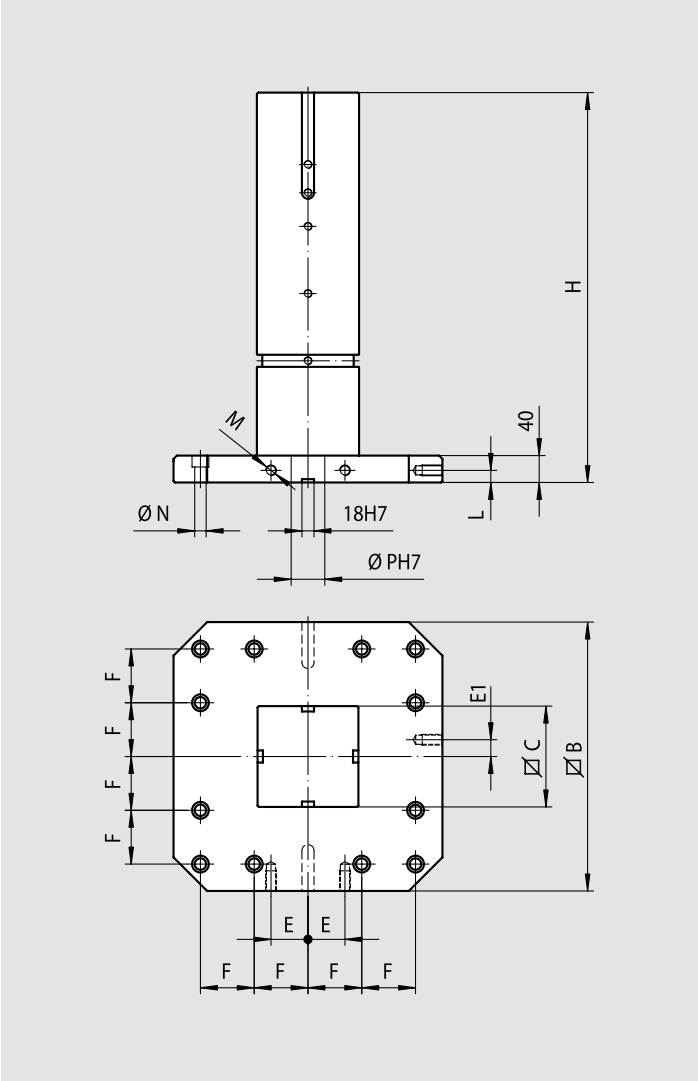

Id. No.	for Type	B mm	C mm	E mm	E1 mm	F mm	H mm	L mm	M mm	N mm	P mm	Weight kg
58 22 80 20	MC 150	400	150	55	25	80	580	18	16	17	50	142
58 22 80 30	MC 150	500	150	75	25	100	580	18	16	17	50	169
58 23 80 30	MC 200	500	200	75	25	100	661	18	16	17	50	266

Insert for vertical use

Id. No.	for type
58 22 33 00	VCS - MC 150
58 23 33 00	VCS - MC 200

VCS-MC

Modular vertical clamping systems

Cross Vertical clamping system complete with:
4 clamping equipment MC
1 cross cube
4 pair of CLAK parallels
4 covers for protection for the screws
4 guided slide-ways (floating slide-ways on request for raw workpieces)
4 work stops
4 wrenches
eye bolt for lifting
wooden packing case

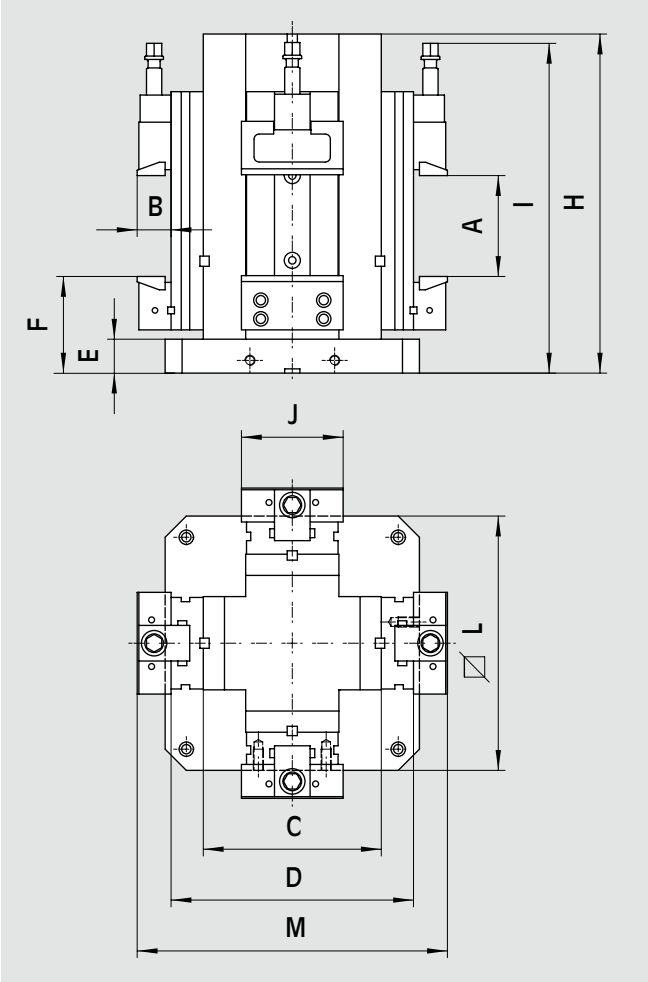

Id. No.	for type	A mm	B mm	C mm	D mm	E mm	F mm	H mm	I mm	J mm	L mm	M mm	Weight kg
77 58 56 21	MC 150 x 200	200	50	300	404	40	140	580	540	150	400	504	314
77 58 56 22	MC 150 x 250	250	50	300	404	40	140	580	590	150	400	504	322
77 58 56 23	MC 150 x 300	300	50	300	404	40	140	580	647	150	400	504	332
77 58 56 31	MC 150 x 200	200	50	300	404	40	140	580	540	150	500	504	342
77 58 56 32	MC 150 x 250	250	50	300	404	40	140	580	590	150	500	504	350
77 58 56 33	MC 150 x 300	300	50	300	404	40	140	580	547	150	500	504	360
77 58 57 41	MC 200 x 300	300	70	350	482	45	168	670	720	200	630	622	627

Working example see page 2.20

DVCS-MC

Vertical clamping system complete with:
4 double clamping equipment MC
1 cross cube XL
8 pair of CLAK parallels
8 covers for protection for the screws
8 guided slide-ways (floating slide-ways on request for raw workpieces)
8 work stops
8 wrenches
eye bolt for lifting
wooden packing case

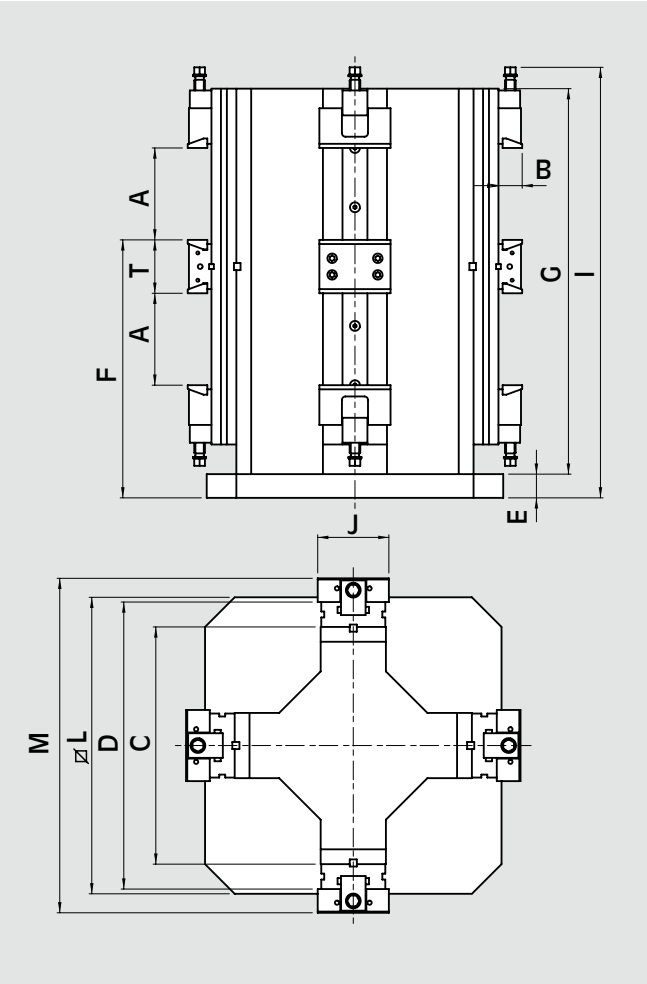

Id. No.	for type	A mm	B mm	C mm	D mm	E mm	F mm	G mm	I mm	J mm	L mm	M mm	T mm	Weight kg
77 58 66 01	DVCS -MC 150 x 200	200	50	550	654	45	515	795	890	150	630	754	103	680

Working example see page 2.21

Cross cube for VCS-MC

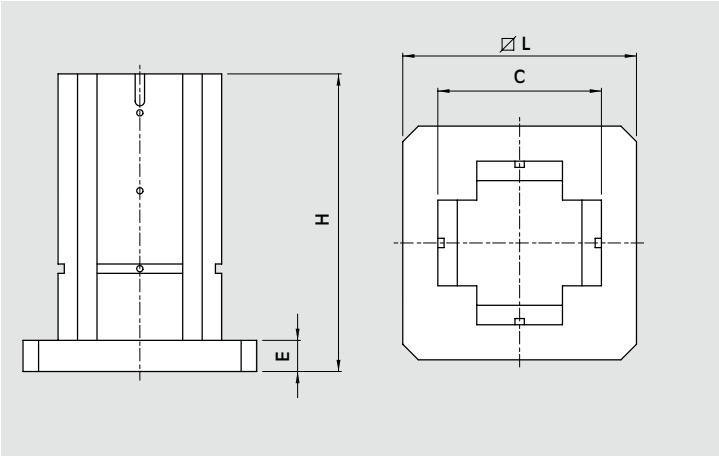

Id. No.	for type	C mm	E mm	H mm	L mm	Weight kg
58 52 80 20	MC 150	300	40	580	400	212
58 52 80 30	MC 150	300	40	580	500	240
58 53 80 40	MC 200	350	45	670	630	363

Cross cube for DVCS-MC

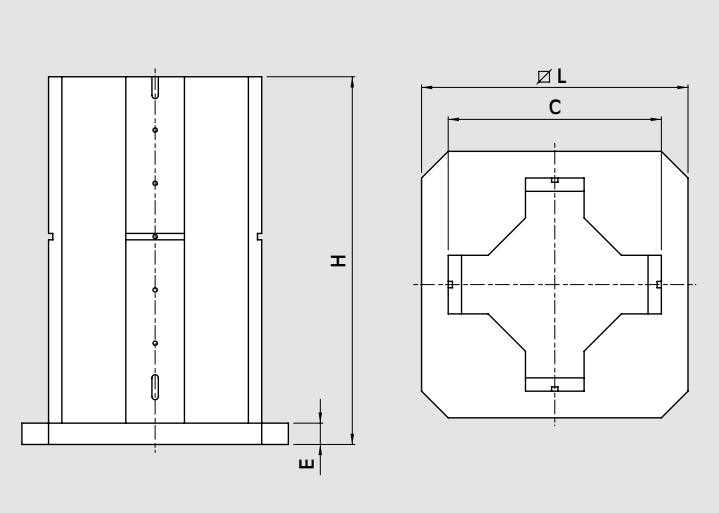

Id. No.	for type	C mm	E mm	H mm	L mm	Weight kg
58 62 80 00	DVCS-MC 150 x ...	550	45	840	630	475

Insert for vertical use

Id. No.	for type
58 22 33 00	VCS - MC 150
58 23 33 00	VCS - MC 200

Pair of grooved jaws

Id. No.	for type
58 06 44 09	MC 150 x ...
58 07 44 09	MC 200 x ...

Insert for vertical use
(MVS, VCS, DVCS)

Id. No.	for type
58 22 33 00	MC 150
58 23 33 00	MC 200

Torque wrench

Id. No.	for type
51 50 10 02	MC 150 x ...
51 50 10 03	MC 200 x ...

Air/oil block complete
with cylinder and tang

Id. No.	for type
58 02 75 00	MC 150 x ...
58 03 75 00	MC 200 x ...

Air/oil foot pump
with joining pipe cm. 180 (71”) and complete block
for air/oil application

Id. No.	for type
77 58 02 51	MC 150 x ...
77 58 03 51	MC 200 x ...

Air/oil foot pump

Id. Nr.	for type
71 66 03 05	MC 150 x ...
71 66 03 05	MC 200 x ...

Air/oil manual pump

Id. No.	for type
71 66 03 15	MC 150 x …
71 66 03 15	MC 200 x …

Pressure - gauge

with graduated scale in Kg

Id. No.	for type
51 43 12 51	MC 150 x …
51 43 12 51	MC 200 x …

Joining pipe M. 1,80 (71’)

Id. No.	for type
71 70 87 13	MC 150 x …
71 70 87 13	MC 200 x …

Joining pipe M. 3 (118”)

Id. No.	for type
71 70 87 14	MC 150 x …
71 70 87 14	MC 200 x …

Joining pipe M. 6 (236”)

Id. No.	for type
71 70 87 15	MC 150 x …
71 70 87 15	MC 200 x …

Pair of clamps

complete with screw and T nuts

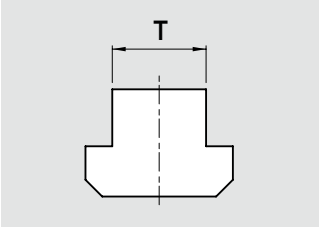

Code for T-slots						for type
mm 12	mm 14	mm 16	mm 18	mm 20	mm 22	
58 02 27 92	58 02 27 93	58 02 27 94	58 02 27 95	58 02 27 96	58 02 27 97	MC 150 x …
58 03 27 92	58 03 27 93	58 03 27 94	58 03 27 95	58 03 27 96	58 03 27 97	MC 200 x …

Pair of nuts

complete with screws at 45°

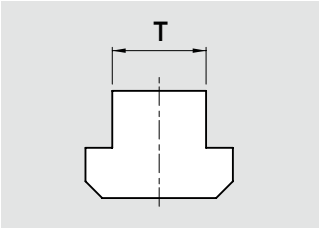

Code for T-slots						for type
mm 12	mm 14	mm 16	mm 18	mm 20	mm 22	
58 02 25 92	58 02 25 93	58 02 25 94	58 02 25 95	58 02 25 96	58 02 25 97	MC 150 x …
58 03 25 92	58 03 25 93	58 03 25 94	58 03 25 95	58 03 25 96	58 03 25 97	MC 200 x …

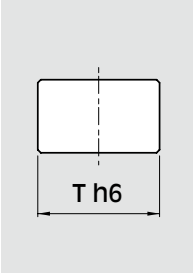

Pair of standard positioning key

Id. No.	for type	T h6 mm
58 02 13 95	MC 150 x …	18
58 02 13 95	MC 200 x …	18

Pair of positioning key

with special dimensions

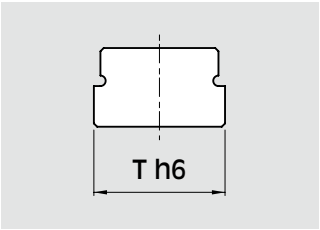

Code for T-slots						for type
mm 12	mm 14	mm 16	mm 18	mm 20	mm 22	
58 02 13 92	58 02 13 93	58 02 13 94	-	58 02 13 96	58 02 13 97	MC 150 x …
58 02 13 92	58 02 13 93	58 02 13 94	-	58 02 13 96	58 02 13 97	MC 200 x …

Spare parts for clamping systems

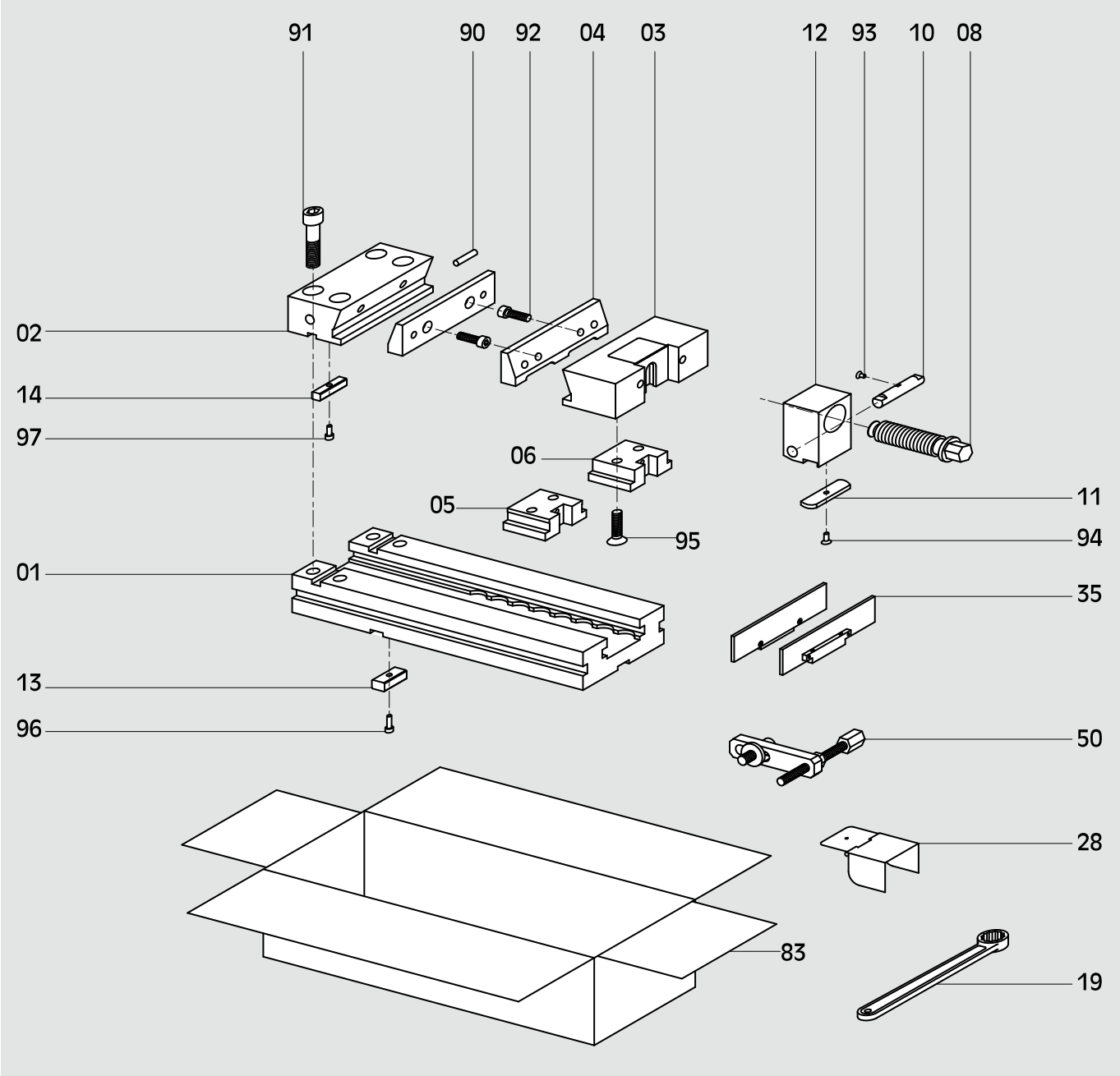

Description

01..... Base
02..... Fixed support
03..... Movable support
04..... Jaw
05..... Floating slide-way
06..... Rigid slide-way
08..... Clamping screw
10..... Contrast pin
11..... Positioning plate
12..... Block for clamping screw
13..... Positioning key
14..... Key for support
19..... Wrench
28..... Cover for protection of the screw
35..... Pair of CLAK parallels
50..... Work stop
83..... Cardboard box
90..... Rubber pad
91..... Screw TCEI
92..... Screw TCEI
93..... Screw TPS
94..... Screw TPS
95..... Screw TPS
96..... Screw TCEI
97..... Screw TCEI

Pair of smooth jaws

Id. No.	for type
58 06 04 09	MC 150 x …
58 07 04 09	MC 200 x …

Fixed support with jaw

Id. No.	for type
58 06 72 10	MC 150 x …
58 07 72 10	MC 200 x …

Movable support with jaw

Id. No.	for type
58 06 73 10	MC 150 x …
58 07 73 10	MC 200 x …

Floating slide-way

Id. No.	for type
58 02 05 00	MC 150 x …
58 07 05 00	MC 200 x …

Rigid slide-way

Id. No.	for type
58 02 06 00	MC 150 x …
58 07 06 00	MC 200 x …

Pair of keys for fixed suport

Id. No.	for type
58 02 14 09	MC 150 x …
58 03 14 09	MC 200 x …

Wrench

Id. No.	for type
58 02 19 00	MC 150 x …
58 03 19 00	MC 200 x …

Complete clamping block (new type)

Id. No.	for type
58 02 74 11	MC 150 x …
58 03 74 11	MC 200 x …

Block for clamping screw (new type)

Id. No.	for type
58 02 12 12	MC 150 x …
58 03 12 12	MC 200 x …

Clamping screw

Id. No.	for type
58 02 08 12	MC 150 x …
58 03 08 12	MC 200 x …

Contrast pin

Id. No.	for type
58 02 10 01	MC 150 x …
58 03 10 01	MC 200 x …

Positioning plate

Id. No.	for type
58 02 11 11	MC 150 x …
58 03 11 11	MC 200 x …

Work stop

Id. No.	for type
58 02 50 00	MC 150 x …
58 03 50 00	MC 200 x …

Cover for protection of the screw

Id. No.	for type
58 02 28 10	MC 150 x …
58 03 28 10	MC 200 x …

Block for cylinder

Id. No.	for type
58 02 12 20	MC 150 x …
58 03 12 20	MC 200 x …

Tang for cylinder

Id. No.	for type
58 02 16 00	MC 150 x …
58 03 16 00	MC 200 x …

Can of oil

Id. No.	for type
10 72 99 40	MC 150 x …
10 72 99 40	MC 200 x …

LC

3.2

Modular clamping equipment

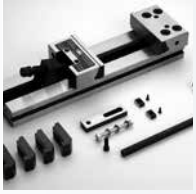

Page 3.2.**3**

LC

Modular clamping equipment

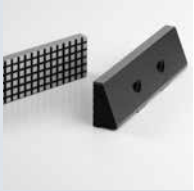

Page 3.2.**8**

LC

Spare parts for clamping equipment

Page 3.2.**4**

LC

Accessories for clamping equipment

LC
is...

LOW COST

The new LC VISE joins the original OML TC and MC VISES as “low cost” solution.

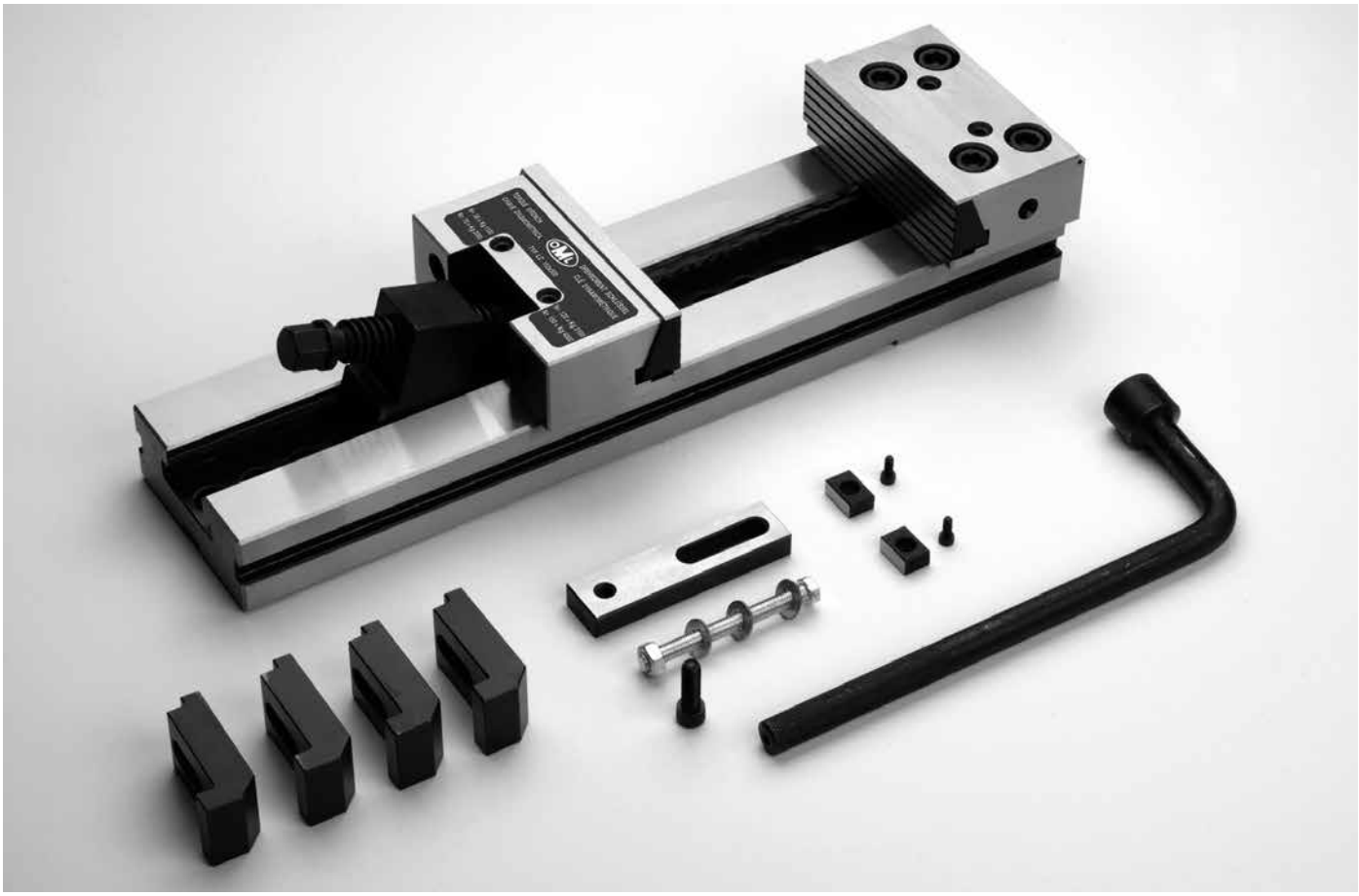

Clamping equipment LC complete with: wrench, rigid slide way (floating slide-way at request for raw workpiece), work stop, pair of positioning keys h6, cover for protection of the screw, 4 clamps, cardboard box.

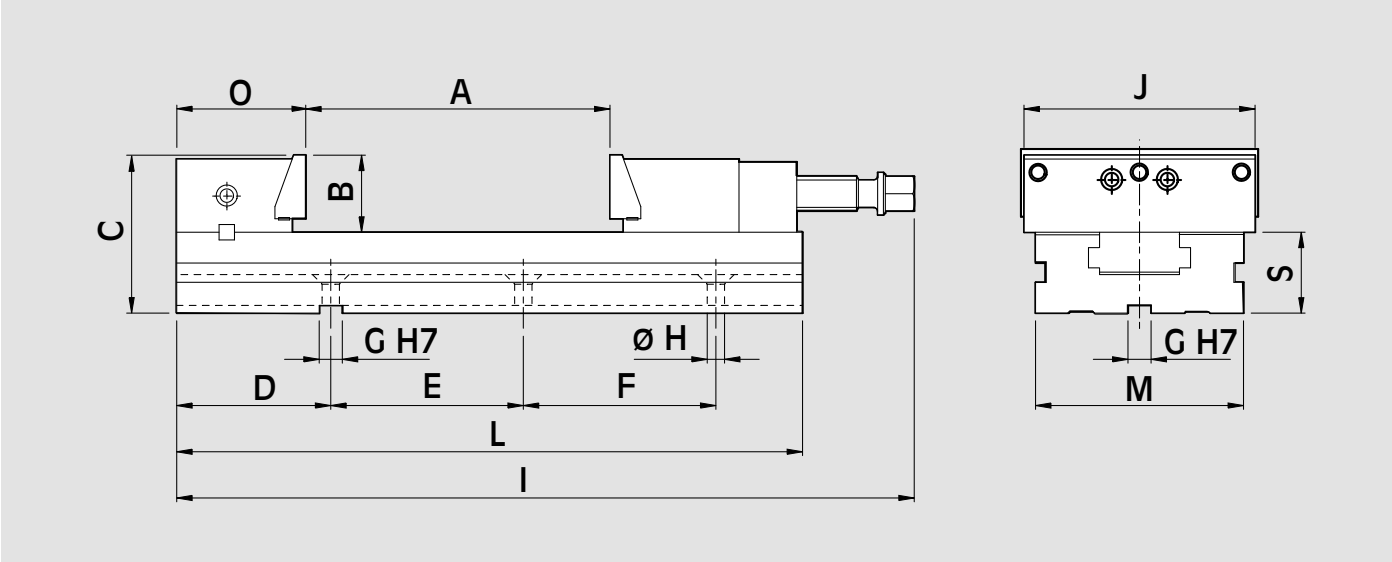

Id. No.	type	A mm	B mm	C mm	D mm	E mm	F mm	G mm	H mm	I mm	J mm	L mm	M mm	O mm	S mm	weight kg
77 58 95 01	LC 125 x 150	150	40	80	111	100	100	16	8,5	410	125	345	95	77,9	40	13
77 58 96 01	LC 150 x 200	200	50	100	122,5	100	100	16	12,5	500	150	420	125	89,4	50	26
77 58 96 02	LC 150 x 300	300	50	100	122,5	100	100	16	12,5	600	150	520	125	89,4	50	29
77 58 97 01	LC 200 x 300	300	65	135	145	100	100	16	12,5	680	200	595	170	113	70	69
77 58 97 02	LC 200 x 400	400	65	135	145	100	100	16	12,5	780	200	695	170	113	70	74

Swivel base for clamping equipment LC

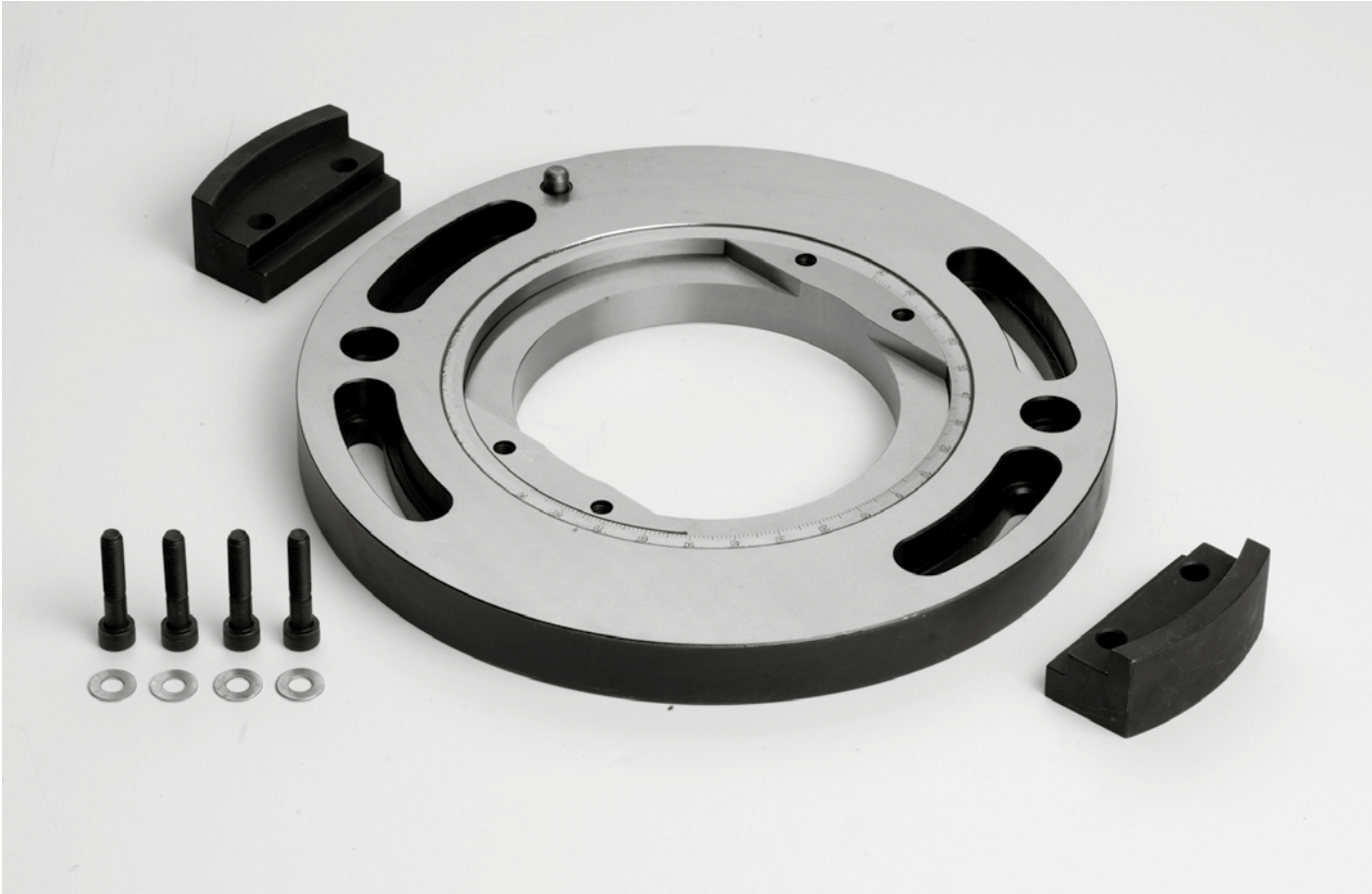

Id. No.	for type
77 58 95 50	LC 125
77 58 96 50	LC 150
77 58 97 50	LC 200

LC extension element

with pair of positioning keys (at customer's choice)

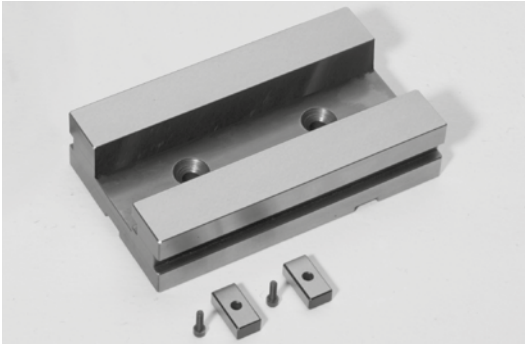

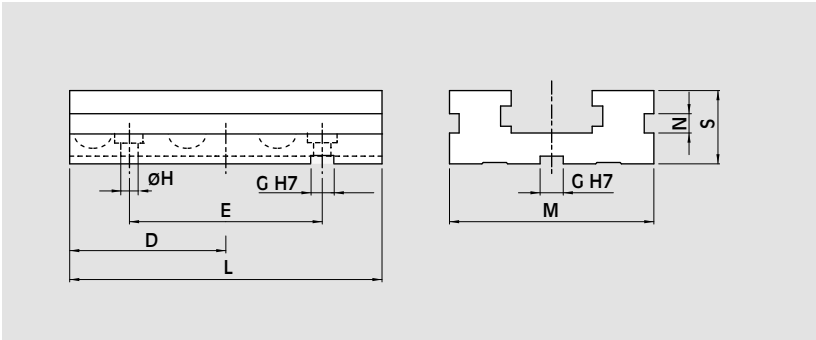

Id. No.	for type	D mm	E mm	G mm	H mm	L mm	M mm	S mm
58 95 17 00	LC 125	40	40	16	8,5	160	95	40
58 96 17 00	LC 150	40	50	16	13	230	125	50
58 97 17 00	LC 200	50	100	16	17	300	170	70

Complete extension element LC

with pair of positioning keys (at customer's choice)

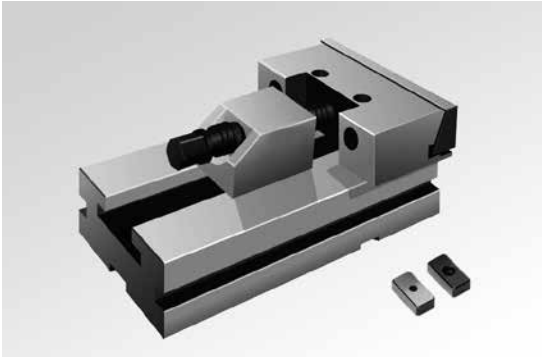

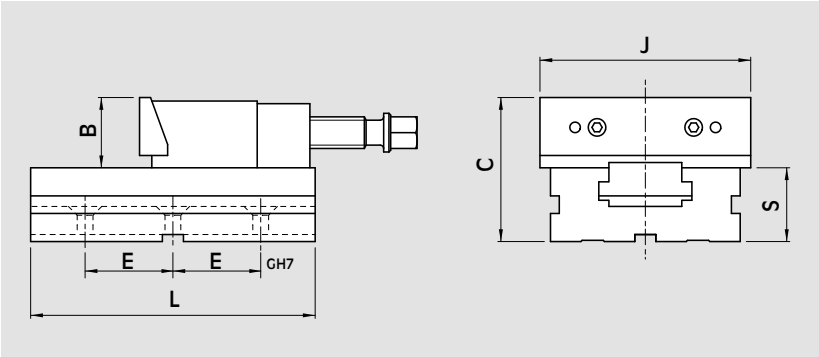

Id. No.	for type	B mm	C mm	J mm	L mm	S mm	E mm	Weight kg
58 95 71 20	LC 125	40	80	125	160	40	40	6,3
58 96 71 20	LC 150	50	100	150	230	50	50	14,2
58 97 71 20	LC 200	65	135	200	300	70	100	35,0

Base with fixed support LC

with pair of positioning keys (at customer's choice)

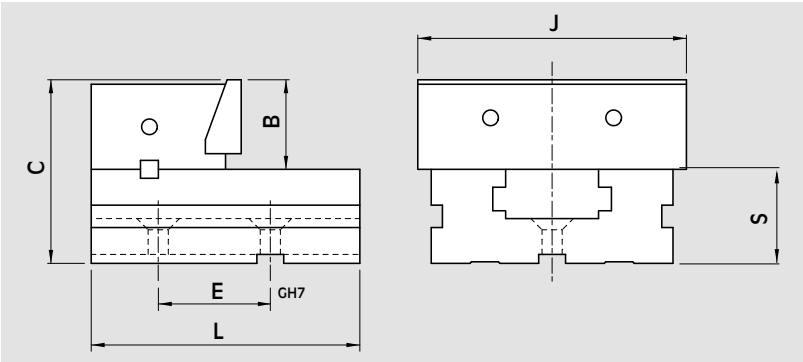

Id. No.	for type	B mm	C mm	J mm	L mm	S mm	E mm	Weight kg
58 95 70 20	LC 125	40	80	125	160	40	40	5,8
58 96 70 20	LC 150	50	100	150	230	50	50	12,6
58 97 70 20	LC 200	65	135	200	300	70	100	29,8

Base with double fixed support - LC

with pair of positioning keys (at customer's choice)

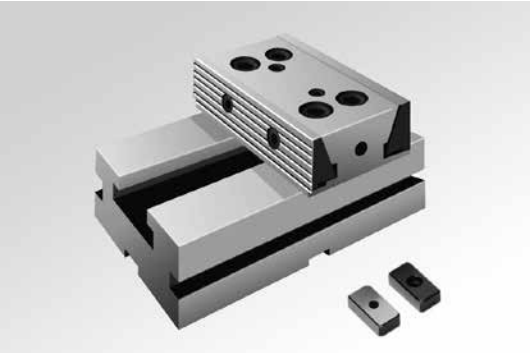

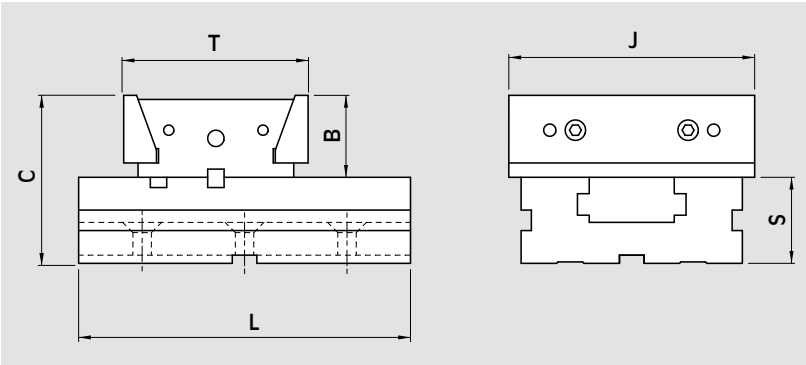

Id. No.	for type	B mm	C mm	J mm	L mm	S mm	T mm	Weight kg
58 95 70 60	LC 125	40	80	125	160	40	84,8	6,0
58 96 70 60	LC 150	50	100	150	230	50	101,8	13,3
58 97 70 60	LC 200	65	135	200	300	70	132,8	30,0

Middle jaw LC

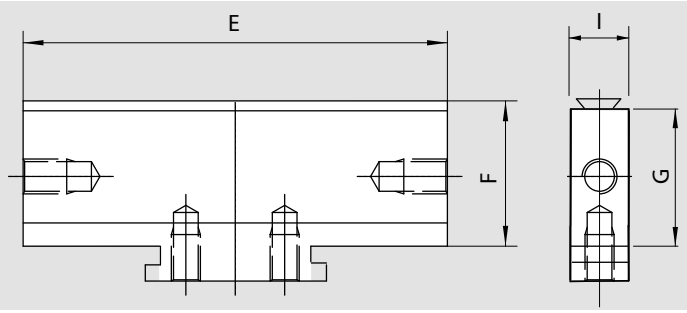

Id. No.	for type	E mm	F mm	G mm	I mm
58 95 41 10	LC 125	121	38	33	30
58 96 41 10	LC 150	146	48	43	30
58 97 41 10	LC 200	196	68	53	30

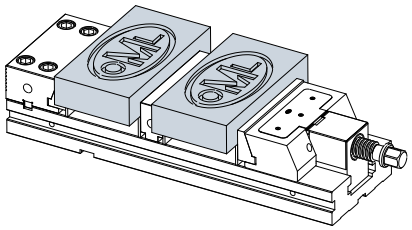

Floating movable support with jaw LC

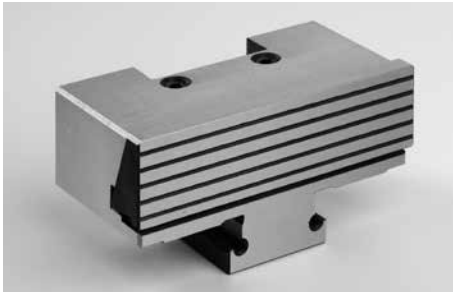

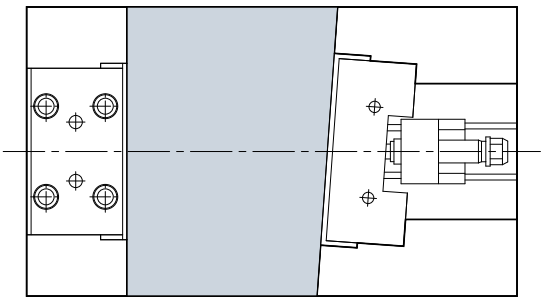

Id. No.	for type
58 95 73 50	LC 125
58 96 73 50	LC 150
58 97 73 50	LC 200

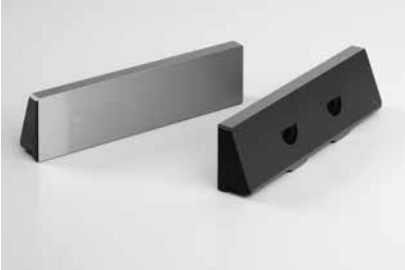

Pair of smooth jaws LC

Id. No.	for type
58 95 04 09	LC 125
58 96 04 09	LC 150
58 97 04 09	LC 200

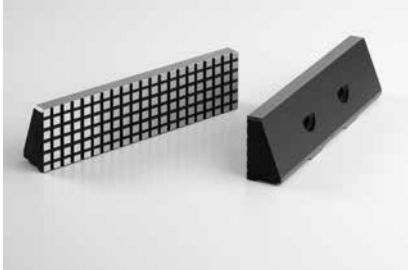

Pair of serrated jaws LC

Id. No.	for type
58 95 44 29	LC 125
58 96 44 29	LC 150
58 97 44 29	LC 200

Insert for vertical use

Id. No.	for type
58 95 33 00	LC 125
58 96 33 00	LC 150
58 97 33 00	LC 200

Set of 6 pairs of parallels (no clak) LC

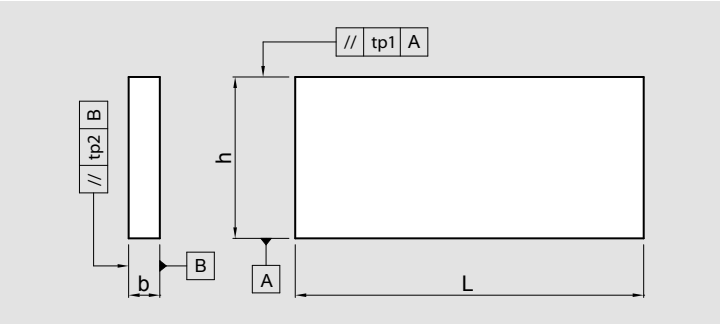

Id. No.	for type	h mm	L mm	B mm	tollerance A	tollerance B
58 96 92 06	LC 150	25 - 30 - 35 - 40 - 45 - 47	150	8	0,009	0,005
58 97 92 06	LC 200	40 - 45 - 50 - 55 - 60 - 62	200	8	0,009	0,005

Spare parts for clamping equipment

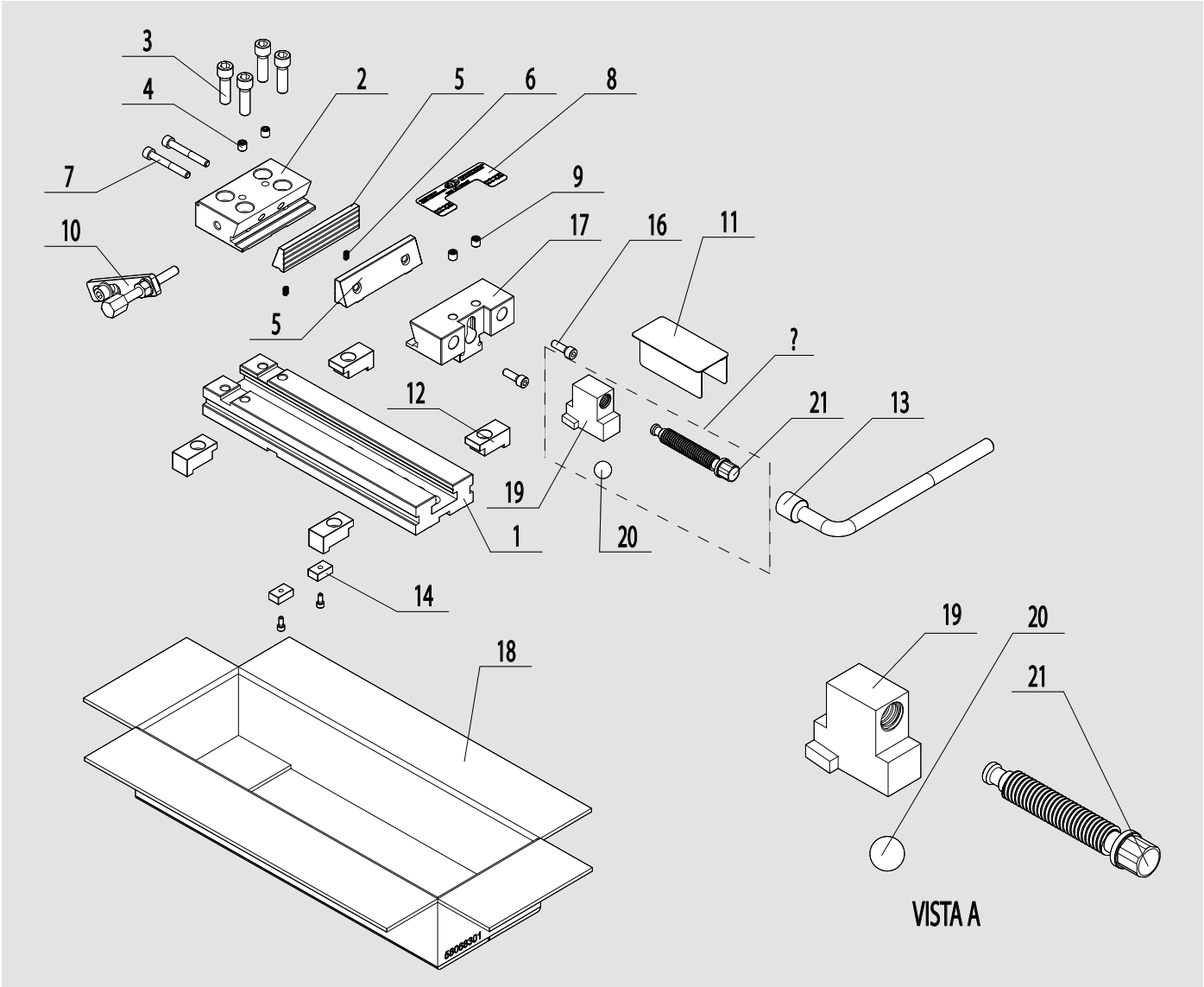

Pos.	Description	Quantity	Pos.	Description	Quantity
21	Clamping screw	1	10	Workstop	1
20	Positioning ball	1	9	Screw STEI	2
19	Block for clamping screw	1	8	Label	1
18	Cardboard box	1	7	Screw STEI	2
17	Guided movable support	1	6	Spring	4
16	Screw TCEI	2	5	Grooved jaw	2
15	Screw TCEI	2	4	Screw STEI	2
14	Positioning key	2	3	Screw STEI	4
13	Wrench	1	2	Fixed support	1
12	Set 4 clamps	4	1	Base	1
11	Cover for protection of the screw	1			

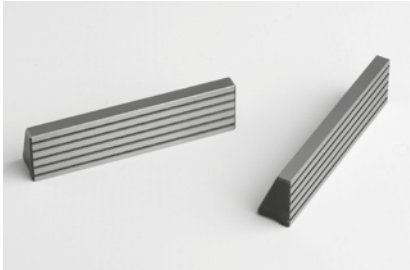

Pair of grooved jaws

Id. No.	for type
58 95 44 19	LC 125
58 96 44 19	LC 150
58 97 44 19	LC 200

Fixed support with jaw

Id. No.	for type
58 95 72 10	LC 125
58 96 72 10	LC 150
58 97 72 10	LC 200

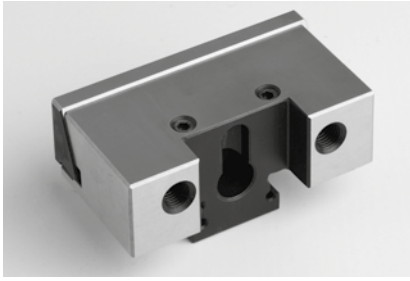

Guided support with jaw

Id. No.	for type
58 95 73 60	LC 125
58 96 73 60	LC 150
58 97 73 60	LC 200

Wrench

Id. No.	for type
58 95 19 00	LC 125
58 96 19 00	LC 150
58 97 19 00	LC 200

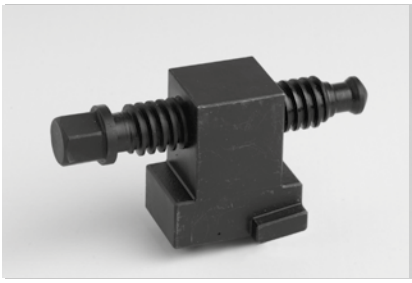

Complete clamping block

Id. No.	for type
58 95 74 10	LC 125
58 96 74 10	LC 150
58 97 74 10	LC 200

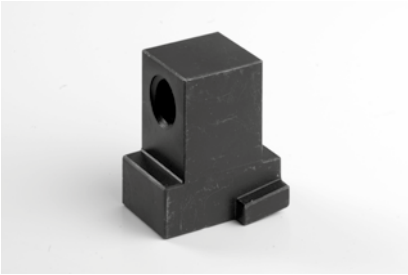

Block for clamping screw

Id. No.	for type
58 95 12 10	LC 125
58 96 12 10	LC 150
58 97 12 10	LC 200

Spare parts for clamping equipment

Clamping screw

Id. No.	for type
58 95 08 10	LC 125
58 96 08 10	LC 150
58 97 08 10	LC 200

Positioning ball

Id. No.	for type
58 95 10 00	LC 125
58 96 10 00	LC 150
58 97 10 00	LC 200

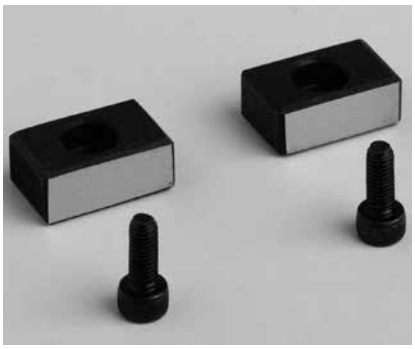

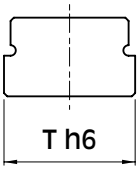

Pair of positioning keys

Id. No.	T h6	for type
58 96 13 92	16/12	LC 125 - LC 150 - LC 200
58 96 13 93	16/14	
58 96 13 94	16/16	
58 96 13 95	16/18	
58 96 13 96	16/20	
58 96 13 97	16/22	

Work stop

Id. No.	for type
58 95 50 00	LC 125
58 96 50 00	LC 150
58 97 50 00	LC 200

Cover for protection of the screw

Id. No.	for type
58 95 28 10	LC 125
58 96 28 10	LC 150
58 97 28 10	LC 200

Set of 2 pairs of clamps

Id. No.	for type
58 95 27 09	LC 125
58 96 27 09	LC 150
58 97 27 09	LC 200

CLAK

Modular parallels and soft jaws quick change

Set of parallels (quick change)

Page 4.3

V jaw (quick change)

Page 4.5

Parallels (quick change)

Page 4.4

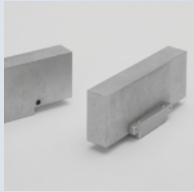

Soft jaws (quick change)

- Steel
- Aluminium

Page 4.6

Angular parallels (quick change)

Page 4.5

CLAK

Modular parallels / quick change

This new patented system allows the quick change of parallels, angular parallels, V-jaws, soft jaws for any type of workpieces.

Benefits:
- Reduce downtime and set- up time
- Elimination of clamps and locks thanks to the patented self locking system
- Increase the accuracy of finished parts and reduce scrap

All components are case hardened and precision ground.

The CLAK system can be used for either the TC range or the MC range.

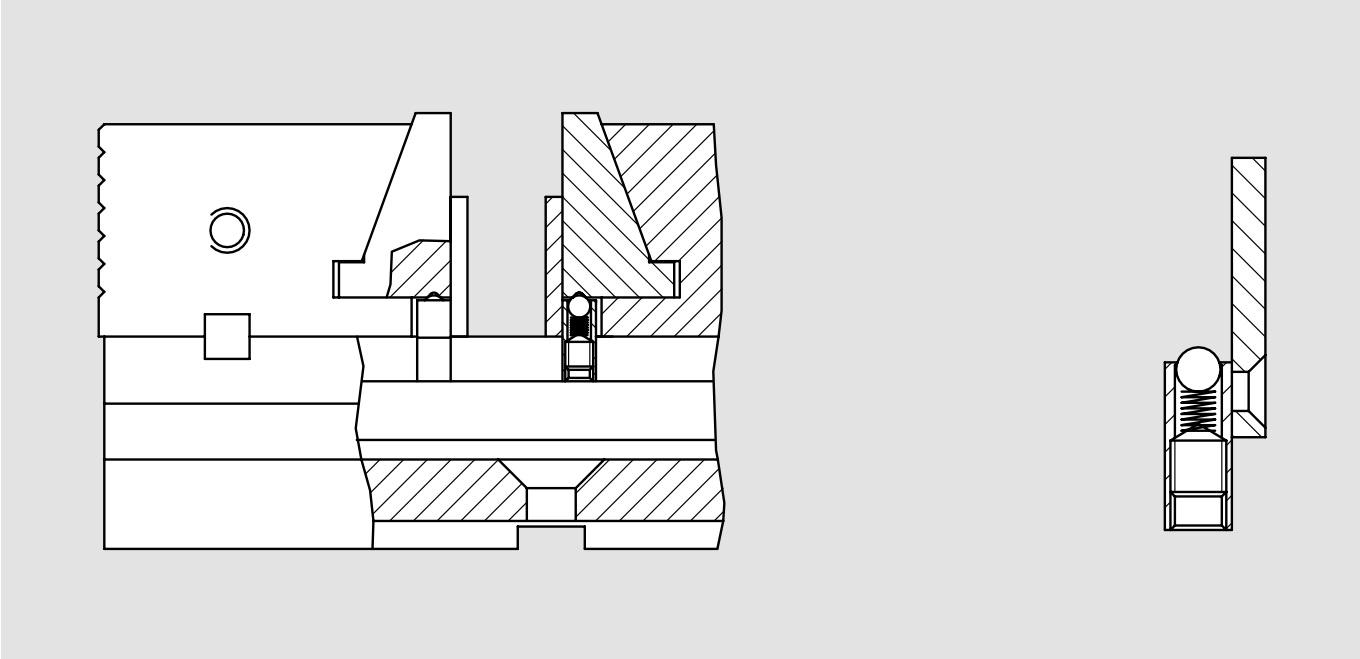

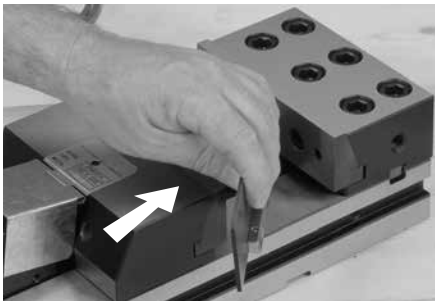

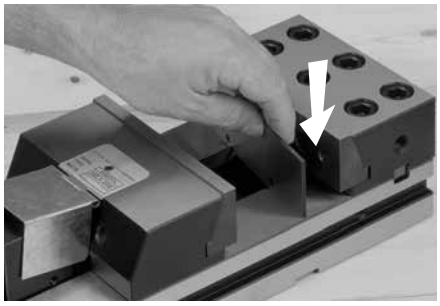

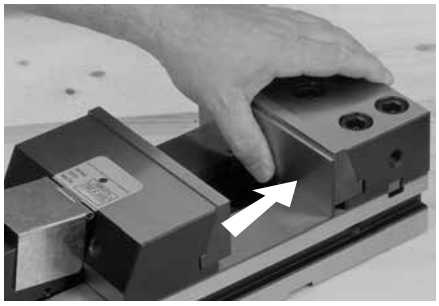

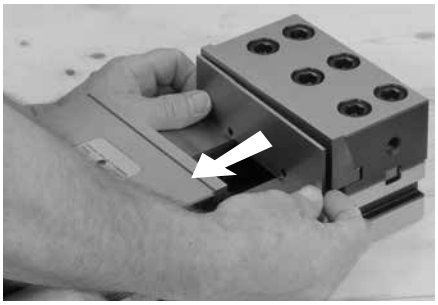

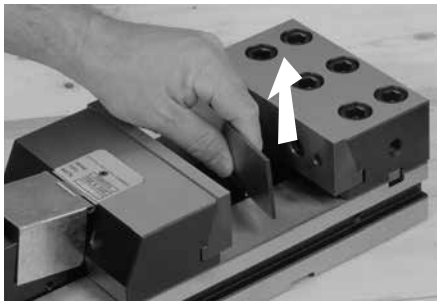

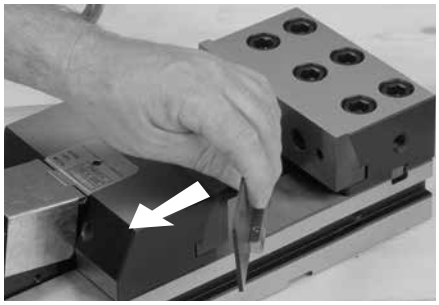

Set of 6 pairs of parallels

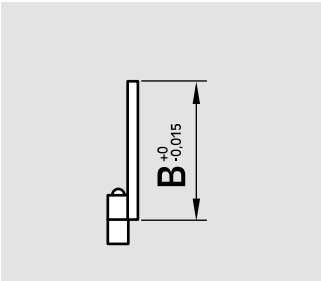

Id. No.	for type	B mm					
58 01 92 06	TC 110 x .../MC 125 x ...	10	15	20	25	30	35
58 02 92 06	TC 150 x .../MC 150 x ...	20	25	30	35	40	45
58 03 92 06	TC 200 x .../MC 200 x ...	20	30	40	50	60	65

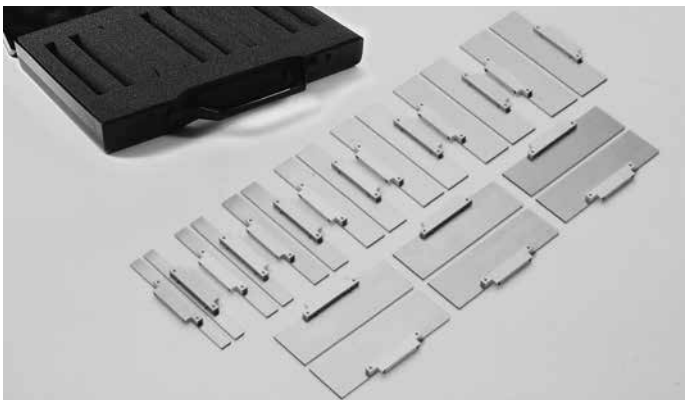

Set of 10 pairs of parallels

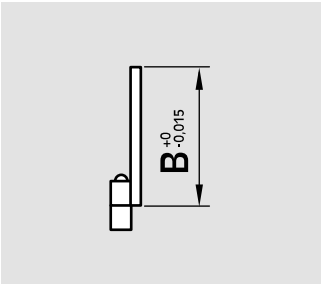

Id. No.	for type	B mm									
58 01 92 10	TC 110 x .../MC 125 x ...	10	12	15	20	25	28	30	33	35	37
58 02 92 10	TC 150 x .../MC 150 x ...	12	15	20	25	30	35	40	43	45	47
58 03 92 10	TC 200 x .../MC 200 x ...	20	25	30	35	40	45	50	55	60	65

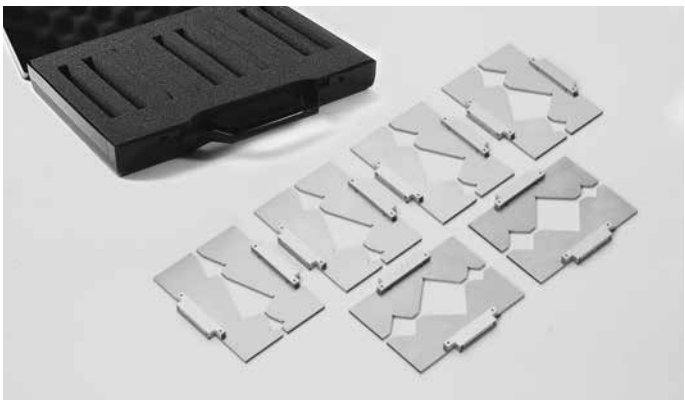

Set of 6 pairs of angular parallels

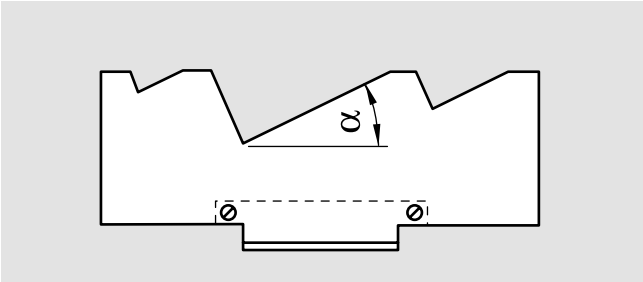

Id. No.	for type	α mm					
58 01 93 06	TC 110 x .../MC 125 x ...	20°	25°	30°	35°	40°	45°
58 02 93 06	TC 150 x .../MC 150 x ...	20°	25°	30°	35°	40°	45°
58 03 93 06	TC 200 x .../MC 200 x ...	20°	25°	30°	35°	40°	45°

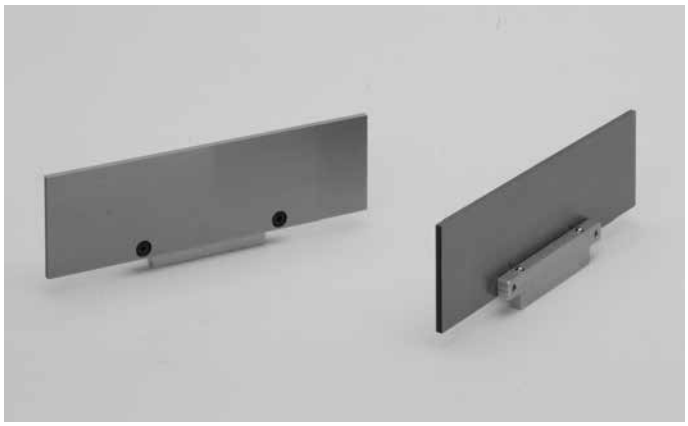

Pair of parallels

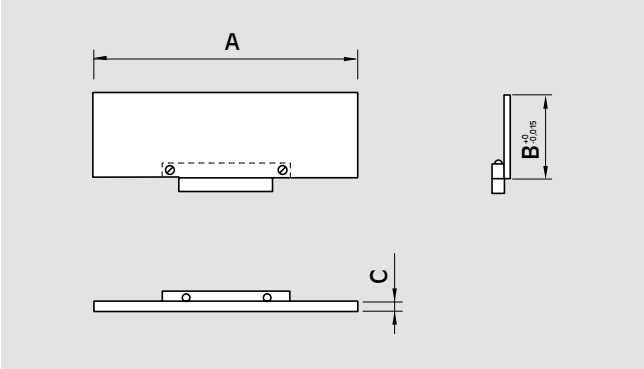

Id. No.	B mm	A mm	C mm	for type
58 01 35 10	10	106	3	TC 110 x .../MC 125 x ...
58 01 35 12	12			
58 01 35 15	15			
58 01 35 20	20			
58 01 35 25	25			
58 01 35 28	28			
58 01 35 30	30			
58 01 35 33	33			
58 01 35 35	35			
58 01 35 37	37			

Id. No.	B mm	A mm	C mm	for type
58 02 35 12	12	146	3	TC 150 x .../MC 150 x ...
58 02 35 15	15			
58 02 35 20	20			
58 02 35 25	25			
58 02 35 30	30			
58 02 35 35	35			
58 02 35 40	40			
58 02 35 43	43			
58 02 35 45	45			
58 02 35 47	47			

Id. No.	B mm	A mm	C mm	for type
58 03 35 20	20	196	4	TC 200 x .../MC 200 x ...
58 03 35 25	25			
58 03 35 30	30			
58 03 35 35	35			
58 03 35 40	40			
58 03 35 45	45			
58 03 35 50	50			
58 03 35 55	55			
58 03 35 60	60			
58 03 35 65	65			

Working examples

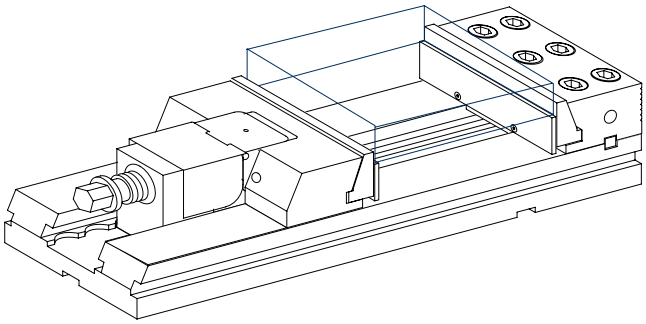

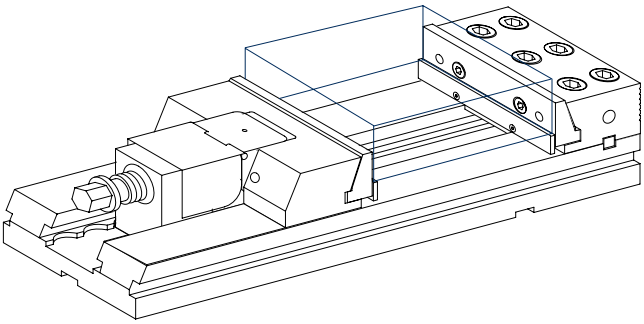

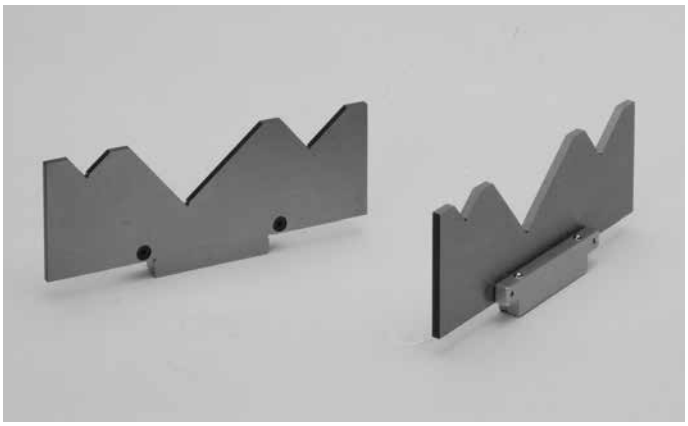

Pair of angular parallels

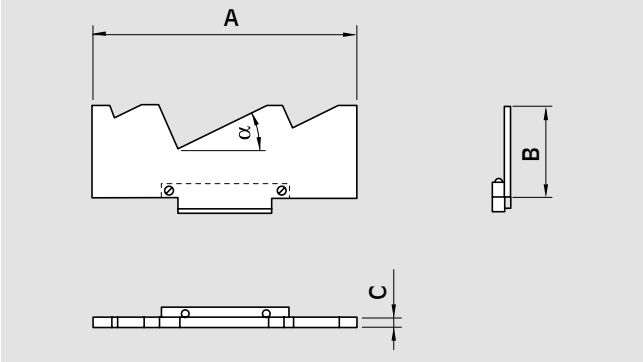

Id. No.	α mm	A mm	B mm	C mm	for type
58 01 36 20	20	106	40	4	TC 110 x .../MC 125 x ...
58 01 36 25	25				
58 01 36 30	30				
58 01 36 35	35				
58 01 36 40	40				
58 01 36 45	45				
58 02 36 20	20	146	50	4	TC 150 x .../MC 150 x ...
58 02 36 25	25				
58 02 36 30	30				
58 02 36 35	35				
58 02 36 40	40				
58 02 36 45	45				

Id. No.	α mm	A mm	B mm	C mm	for type
58 03 36 20	20	196	70	4	TC 200 x .../MC 200 x ...
58 03 36 25	25				
58 03 36 30	30				
58 03 36 35	35				
58 03 36 40	40				
58 03 36 45	45				

Working example

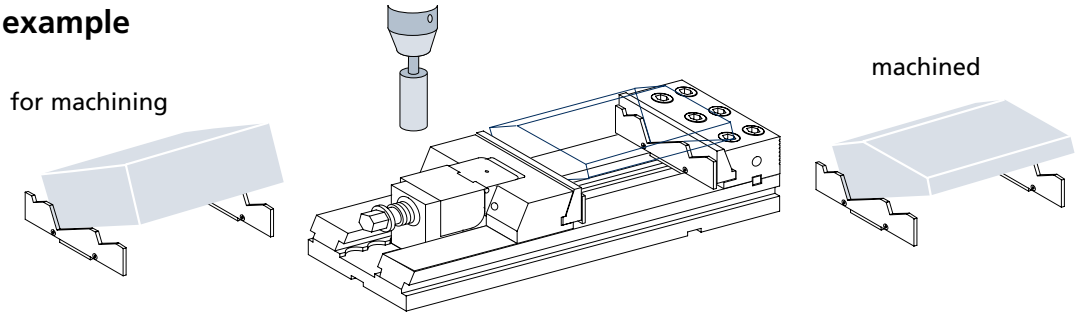

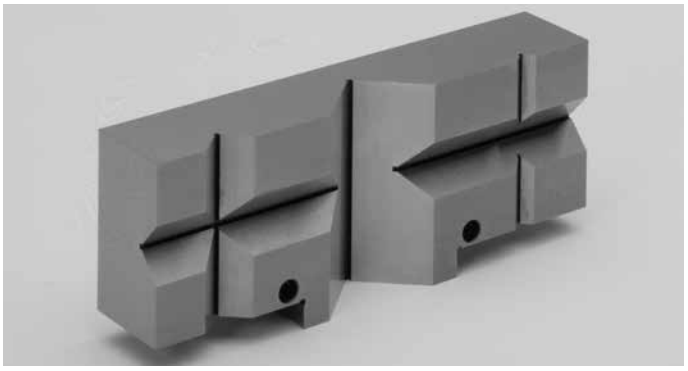

V jaws

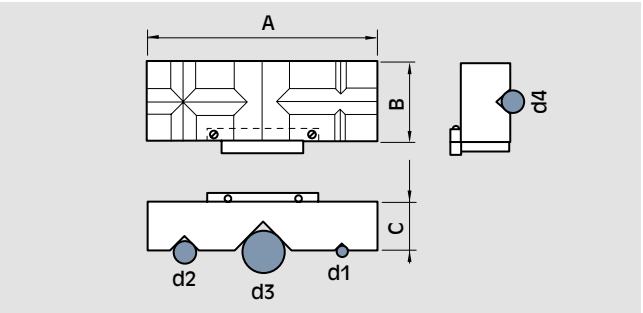

Id. No.	for type	A mm	B mm	C mm	D1		D2		D3		D4	
					MIN-mm	MAX-mm	MIN-mm	MAX-mm	MIN-mm	MAX-mm	MIN-mm	MAX-mm
58 01 94 09	TC 110 x .../MC 125 x ...	106	40	30	3	6,5	6,5	15	15	35	7	16
58 02 94 09	TC 150 x .../MC 150 x ...	146	50	30	3	6,5	6,5	15	15	35	7	16
58 03 94 09	TC 200 x .../MC 200 x ...	196	70	50	6	13	13	30	30	70	15	35

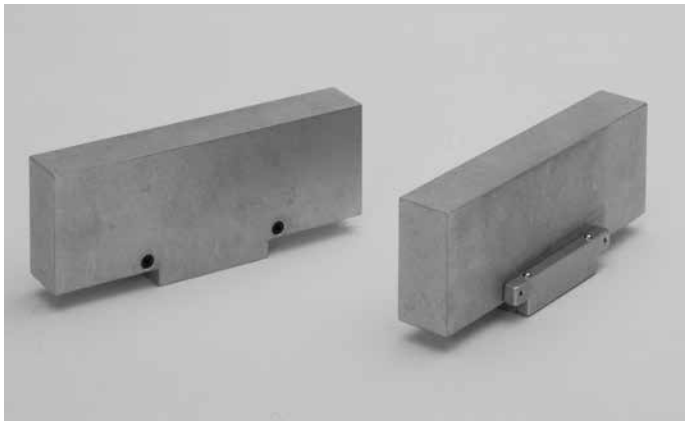

Pair of aluminium jaws

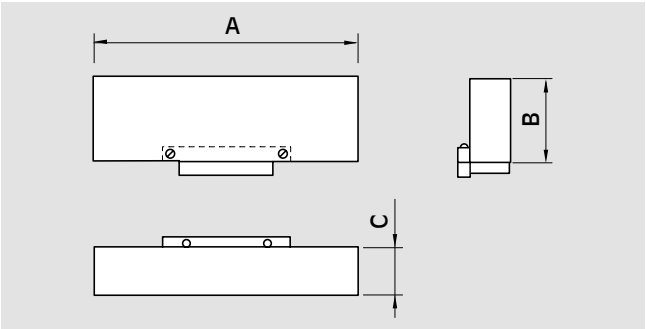

Id. No.	for type	A mm	B mm	C mm
58 01 95 09	TC 110 /MC 125	106	40	19
58 02 95 09	TC 150 /MC 150	146	50	24
58 03 95 09	TC 200/MC 200	196	70	34

Pair of steel soft jaws

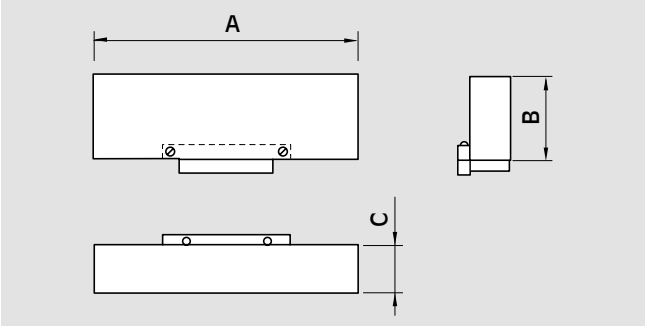

Id. No.	for type	A mm	B mm	C mm
58 01 96 09	TC 110/MC 125	106	40	19
58 02 96 09	TC 150 /MC 150	146	50	24
58 03 96 09	TC 200/MC 200	196	70	34

Working example

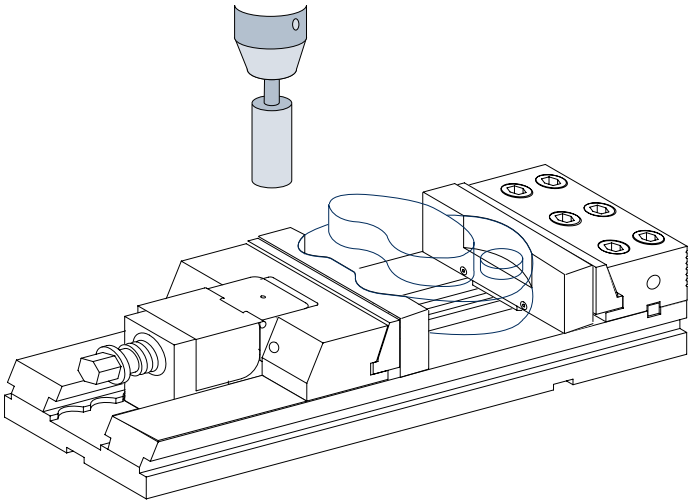

Vice
Self-centering | Double Clamping | Fixed

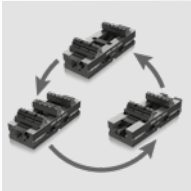

IMG
Vice
- Self-centering
- Double Clamping
- Fixed

Page 5.1.2

IMG
Self-centering | Double Clamping | Fixed
- IMG 160 - 270

Page 5.1.20

IMG
Self-centering | Double Clamping | Fixed
- IMG 88 - 130

Page 5.1.10

IMG
Self-centering | Double Clamping | Fixed
- IMG 160 - 420

Page 5.1.22

IMG
Self-centering | Double Clamping | Fixed
- IMG 88 - 230

Page 5.1.12

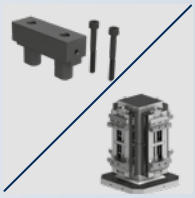

IMG
Accessories
- Extension element
- Riser
- Alu Pyramid
- Triangular tombstone
- Tombstone

Page 5.1.24

IMG
Self-centering | Double Clamping | Fixed
- IMG 125 - 180

Page 5.1.14

Clamping Pins
Accessories
- For APS 140 and APS 190

Page 5.1.40

IMG
Self-centering | Double Clamping | Fixed
- IMG 125 - 220

Page 5.1.16

CLAK System
Accessories

Page 5.1.42

IMG
Self-centering | Double Clamping | Fixed
- IMG 125 - 320

Page 5.1.18

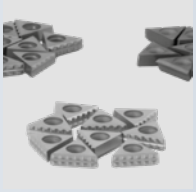

IMG
- Spare parts

Page 5.1.44

Self-centering vice | Doub

SinterGrip jaws

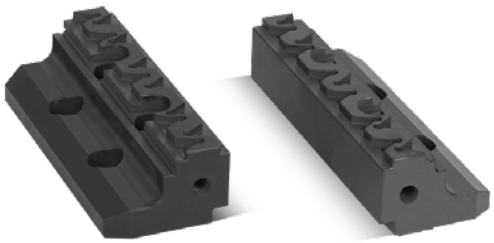

BASIC jaws
without Sintergrip inserts for **IMG BASIC** models

Find out more

Wide clamping range
Maximum flexibility
For external and internal clamping

SinterGrip jaws:
Reversible jaws for minimum clamping depth and without pre-machining

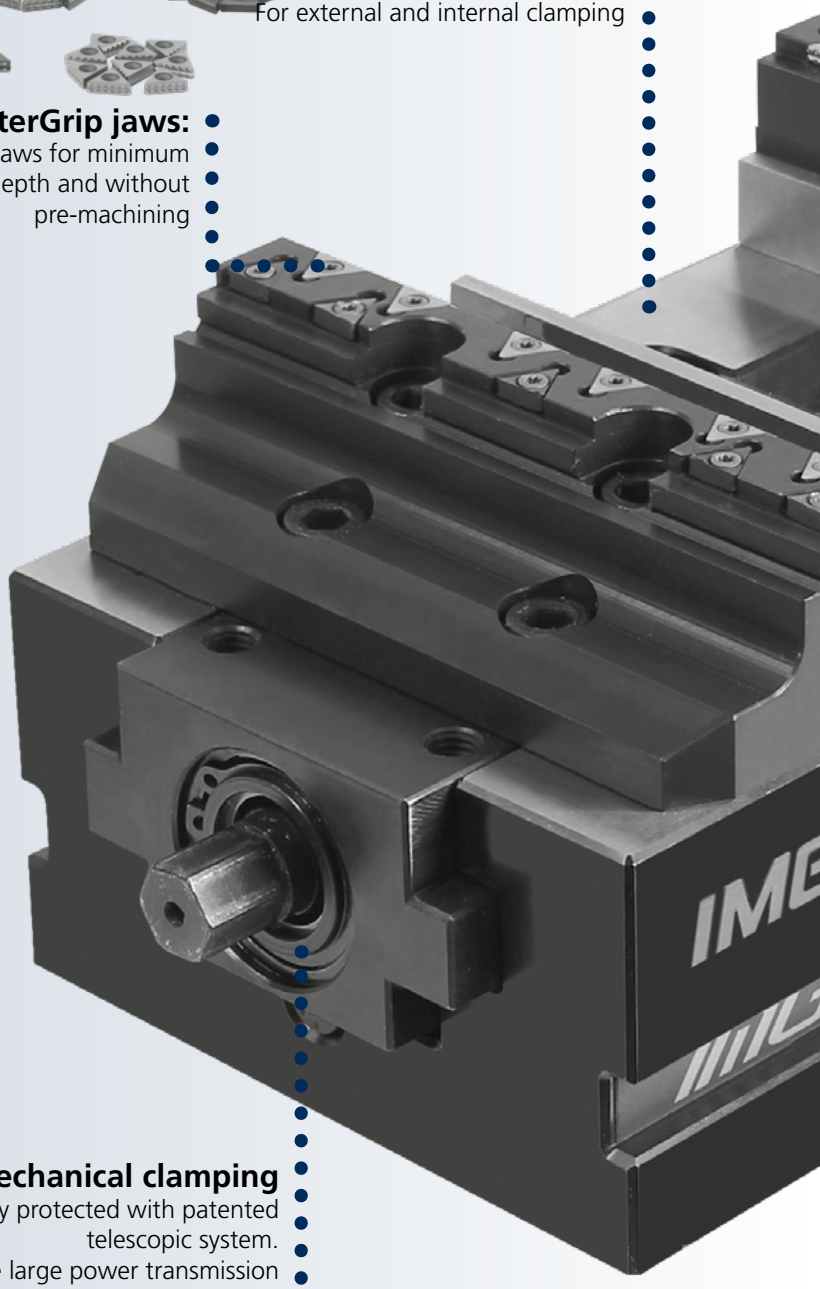

Mechanical clamping
Totally protected with patented telescopic system.
The large power transmission allows high performance in the manufacturing process

Interface
For Zero Point clamping systems and mounting holes as standard

le Clamping | Fixed

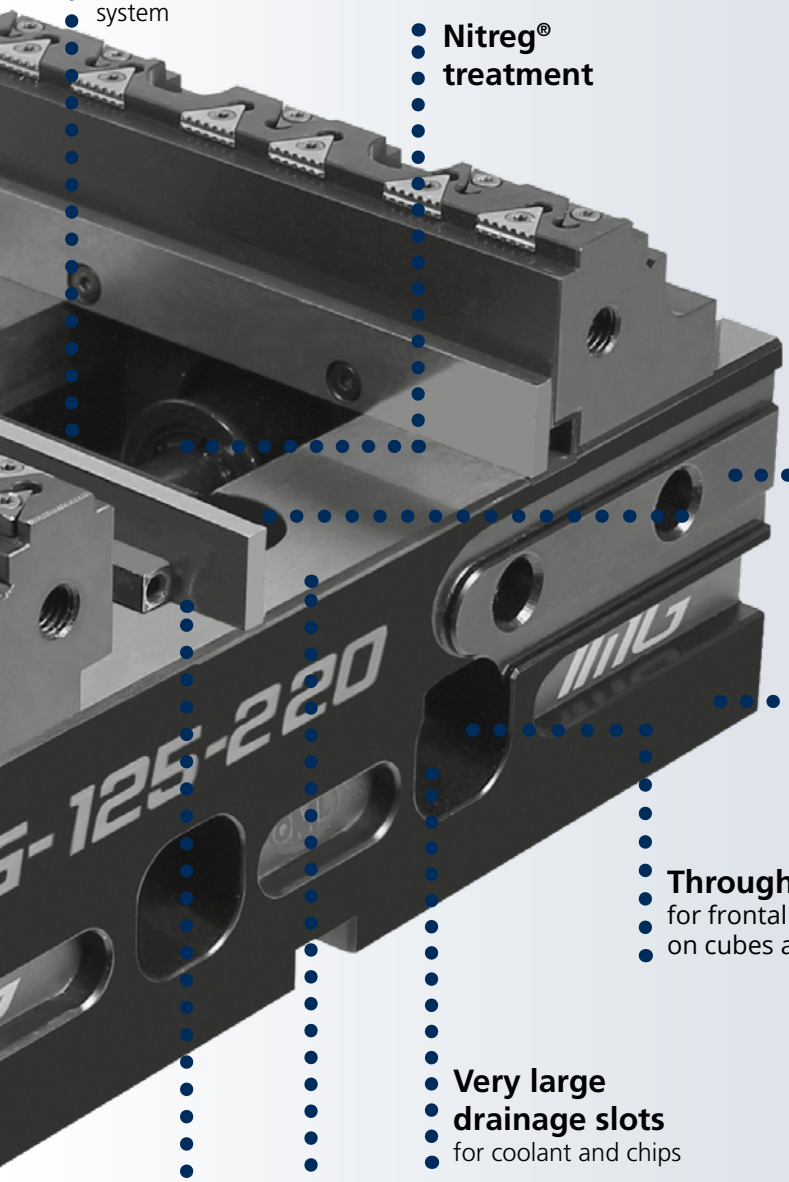

Totally protected
With patented telescopic system

Nitreg® treatment

Ideal
For automation and palletizing systems

Flexible mounting
on machine tool pallet using clamps (optional)

Double clamping jaw (for double clamping)

Retainer plate (for fixed clamping)

Through-holes
for frontal clamping on cubes and plates

Very large drainage slots
for coolant and chips

Treated and precision ground guides
for maximum accuracy and repeatability

Parallels
with quick change Clak System

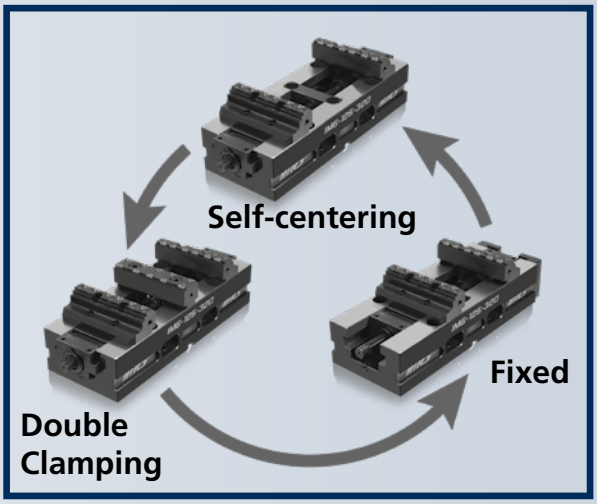

Vice
Self-centering | Double Clamping | Fixed

PATENTED PROTECTED SCREW

IMG vices have a fully protected operating screw with a patented telescopic system.
This innovation makes it possible to avoid having to remove the jaws in order to find the clamping position. In fact, normally, vices with protected screws use the slide-way as a protection.

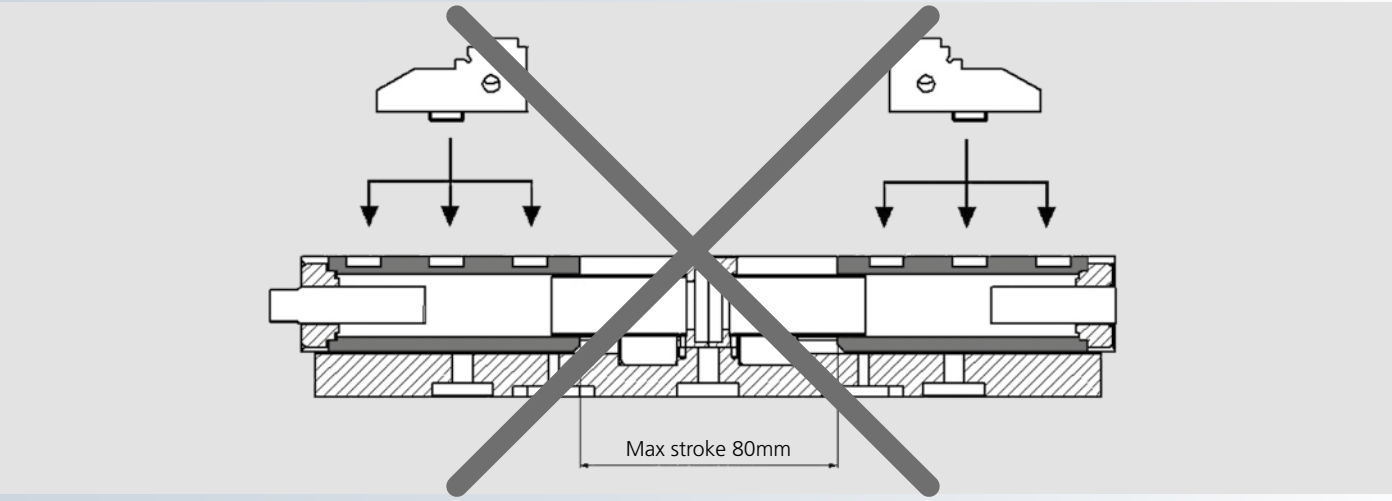

This type of solution forces continuous displacement of the jaws in the appropriate seat.
IMG, on the contrary, while keeping the screw completely protected, allows the continuous movement of opening and closing of the vice.

Clamping force

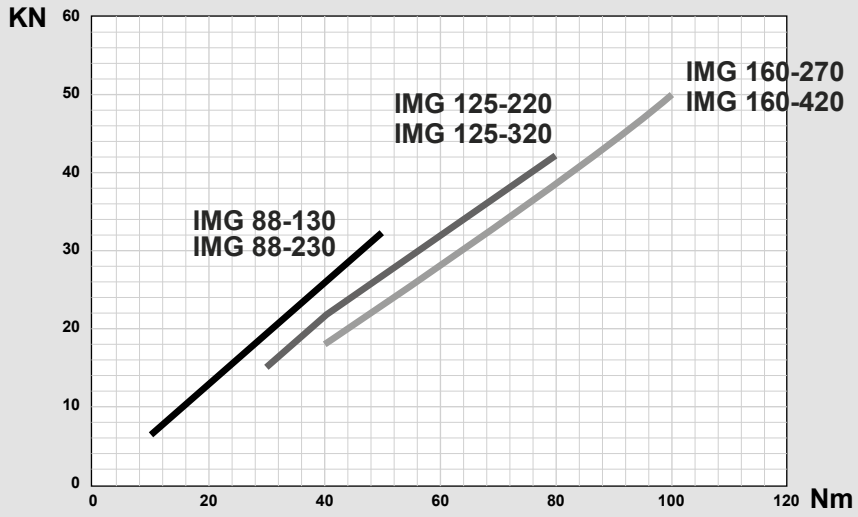

Clamping forces valid for self-centering, Double clamping, Fixed jaw

Vice
Self-centering | Double Clamping | Fixed

IMG BASIC

The **IMG Basic** models have the same characteristics as the **IMG** vises with the only difference of mounting **Basic jaws** without SinterGrip inserts.

BASIC jaws
without Sintergrip inserts for **IMG BASIC** models

Vice
Self-centering | Double Clamping | Fixed

MODULAR

The IMG self-centering vices can be easily transformed into fixed vices or double clamping vices.

Self-centering

Double Clamping

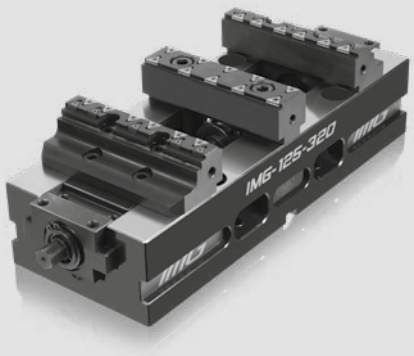

Fixed

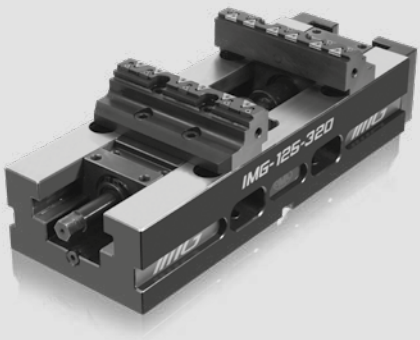

The double clamping vices have a completely compensating mechanism (until zero), therefore it is possible to clamp 2 pieces of different sizes.

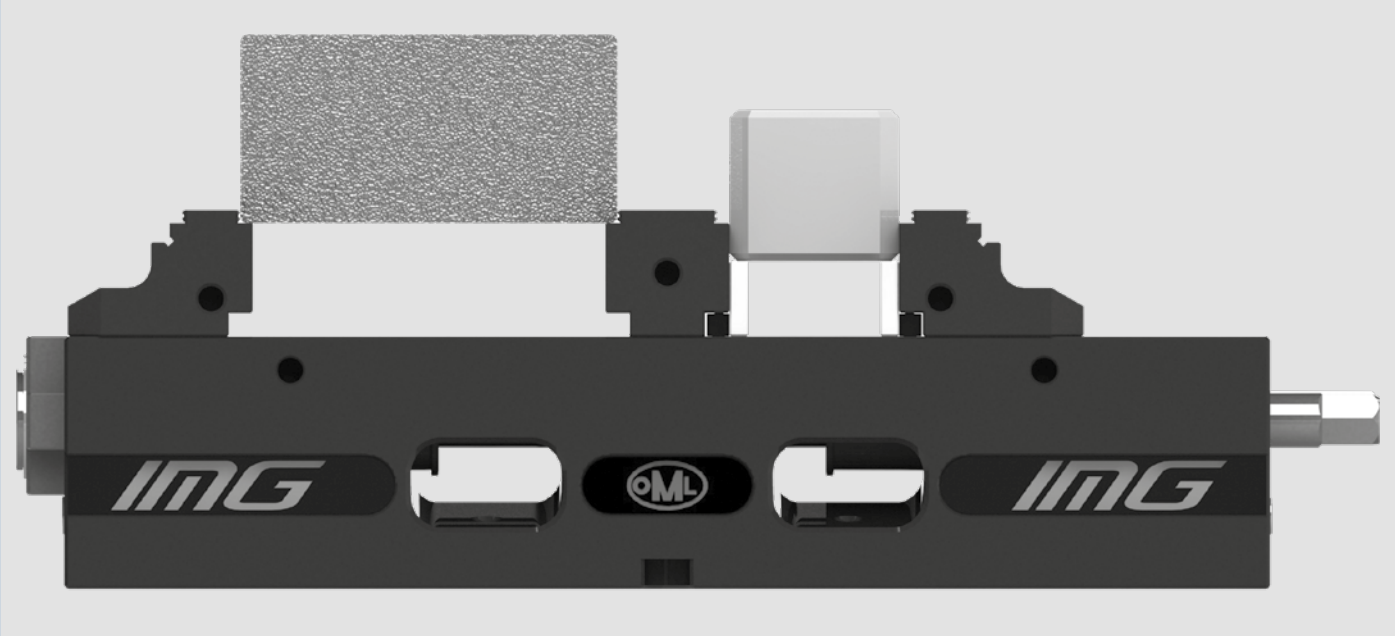

IMG

Modular

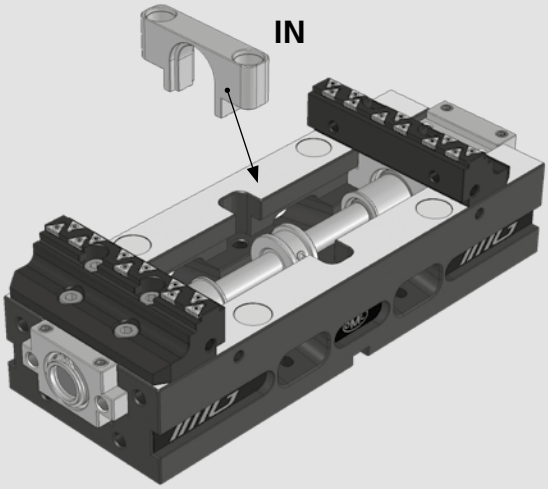

Self-centering

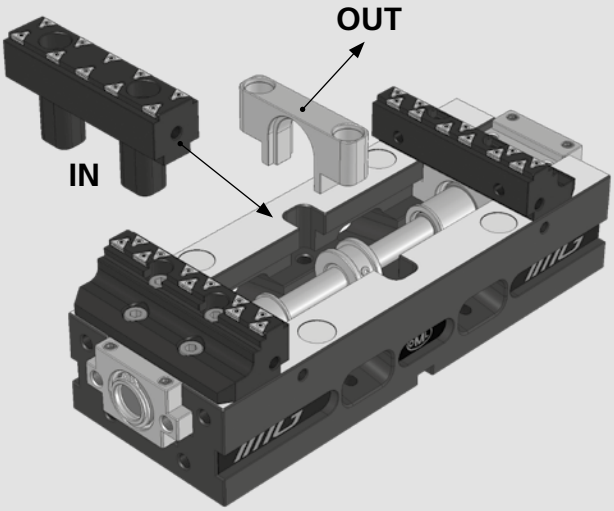

Double Clamping

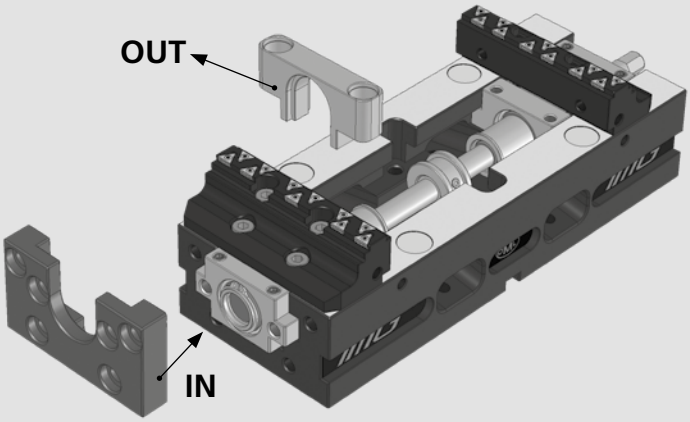

Fixed

Vice
Self-centering | Double Clamping | Fixed

HIGH CLAMPING PERFORMANCE

IMG vices clamp up to 55 kN.
The clamping force combined with the patented SinterGrip system guarantees high performance.

1 OP.

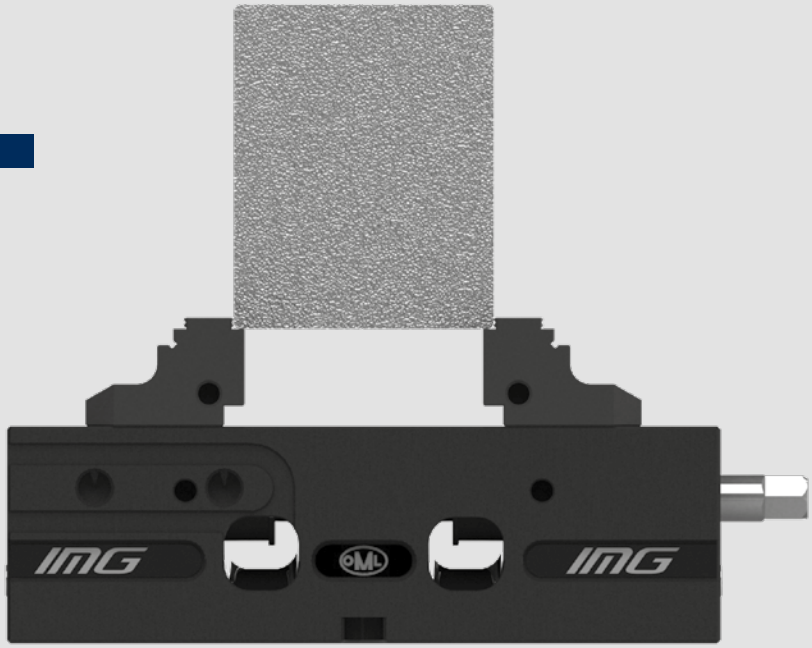

2 OP.

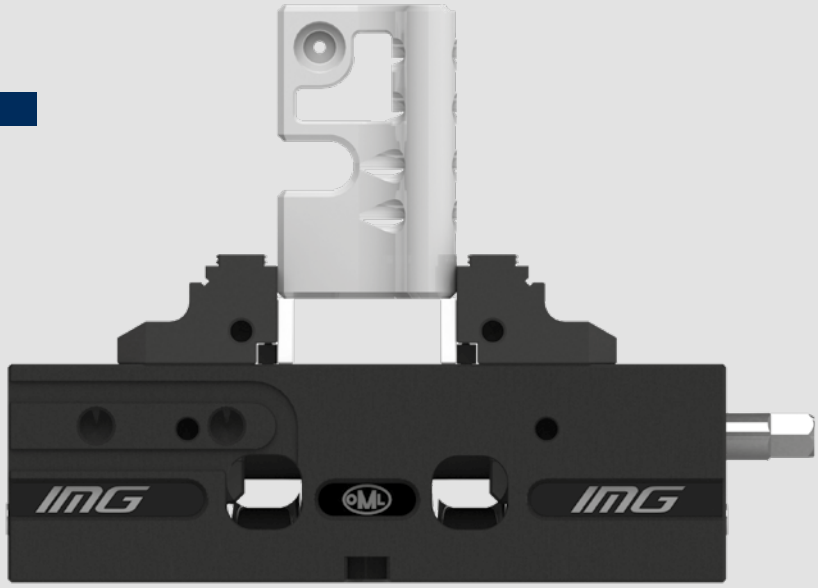

SinterGrip

Our new patented product **SinterGrip** is born to satisfy the current need to clamp a workpiece for very few millimeters (with SinterGrip 3,5 mm clamping surface), and this for the following reasons:

1) In order to machine the workpiece completely in a single operation (especially for 5 axis machines);

2) In order to save money for the raw materials,
especially when they have a big impact on the price (aluminum, titanium, etc.)

Indirectly to these reasons, and in order to improve the performance of the machine tool and the tools

higher cutting speed +
higher feed rate =
bigger volume of metal removed =
less time to machine the workpiece

the market requires safe clamping, which could at the same time possibly avoid the deformations of the piece itself.

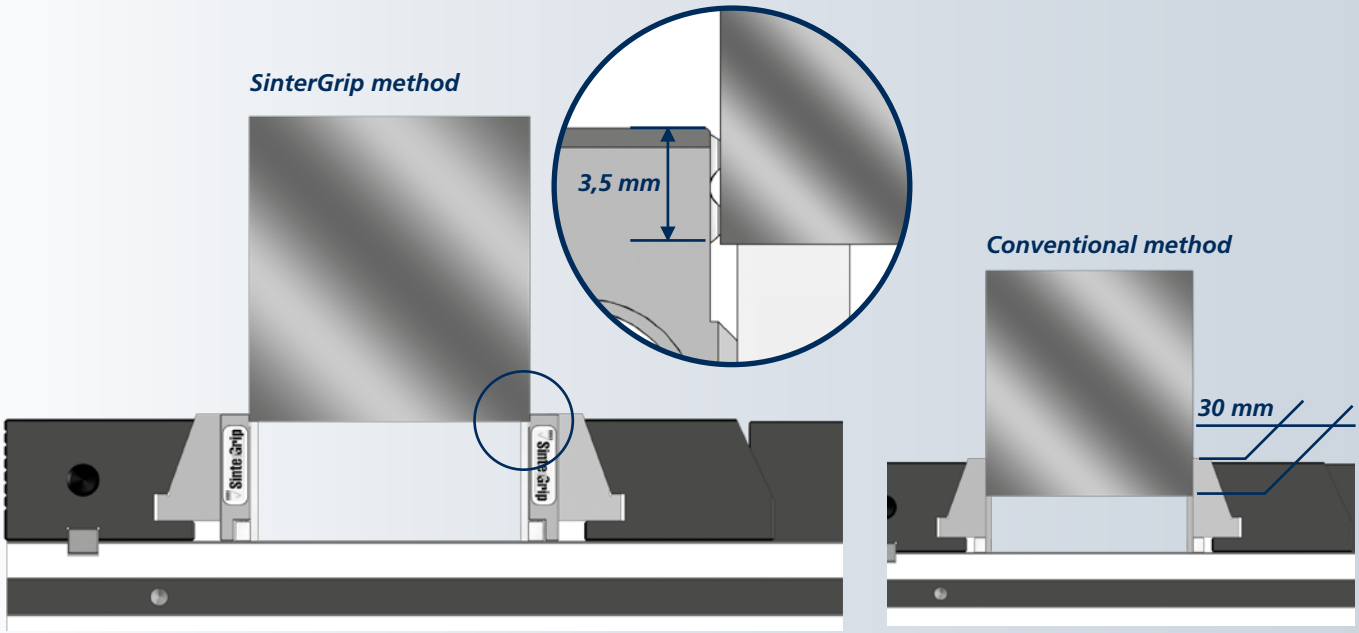

Only 3,5 mm clamping surface, no need of pre-machining the workpiece, clamping stability, higher cutting rate: **SinterGrip** brings only advantages compared to the traditional systems.

On the contrary, traditional systems need, for the clamping of the workpiece, a bigger clamping surface, with the result of waste of raw materials and greater possibility of deformation of the workpiece.

IMG 88 - 130

Self-centering vice | Double Clamping | Fixed

■ Patented protected screw

Applications / Customer Benefits

- Highly precise self-centering clamping with maximum repeatability
- Totally protected
- Compact design for better accessibility and very large drainage slots
- Jaws with SinterGrip clamping inserts for minimum workpiece clamping depth without pre-machining
- Type **IMG BASIC** with jaws without SinterGrip inserts
- Wide clamping range
- Ideal for OP 10 and OP 20

Technical features

- Self-centering clamping
- Clamping force up to 32 kN (50 Nm)
- Jaw width 87,5 mm
- Through-holes for frontal clamping on cubes and plates
- Interface for zero point systems APS / TDM and Plus 5 52 mm as standard

Standard equipment

Wrench, jaws, nr. 10 Sintergrip inserts.

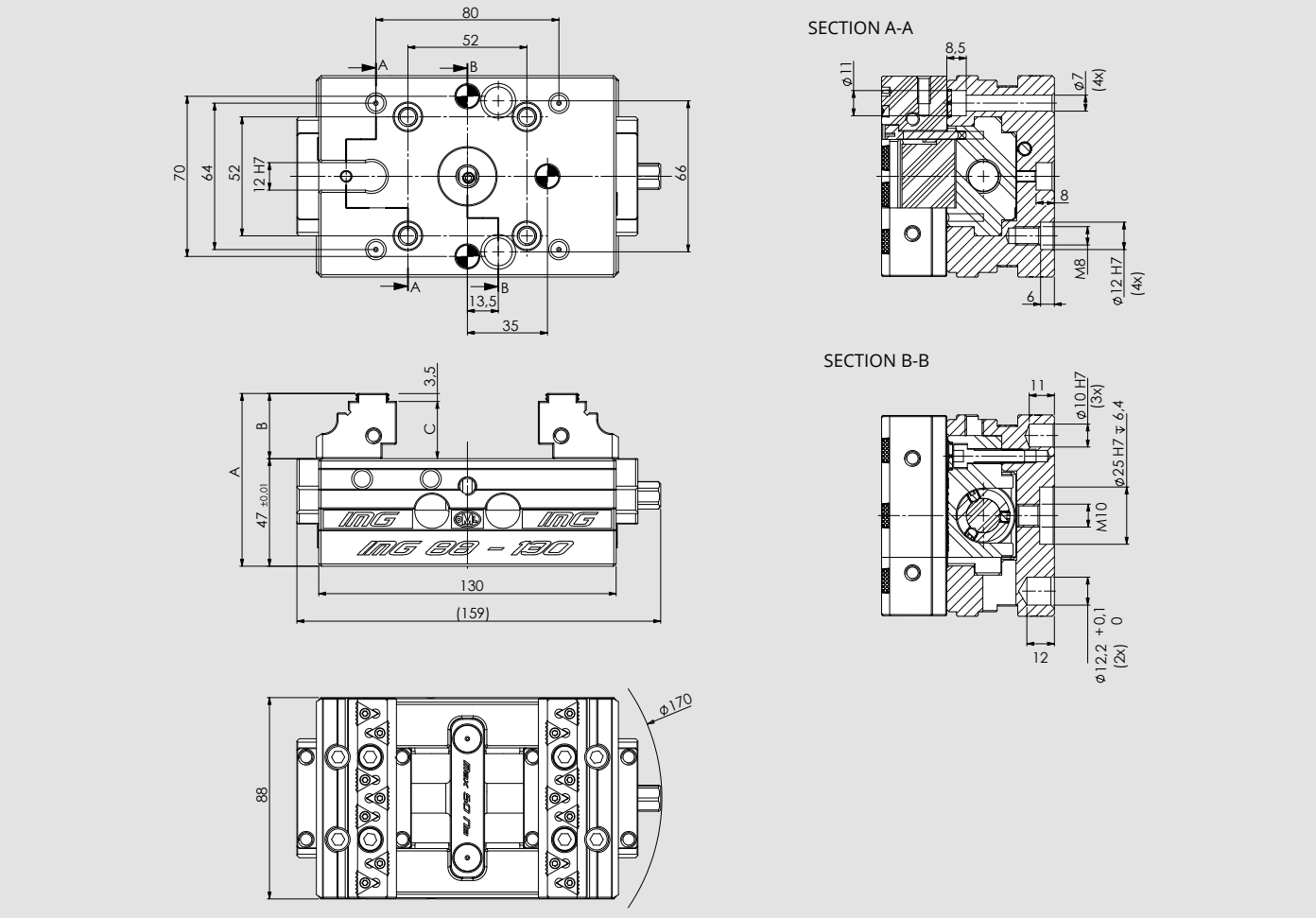

Type	Id. No.	A	B	C	Weight
IMG 88 - 130 with SinterGrip jaws **STD**	77583411	75,5	28,5	25,0	4,5 Kg
IMG 88 - 130 with SinterGrip jaws **ALU**	77583412	75,5	28,5	25,0	4,5 Kg
IMG 88 - 130 with SinterGrip jaws **HRC**	77583413	75,5	28,5	25,0	4,5 Kg
IMG 88 - 130 with SinterGrip jaws **PLM** (for polymer materials)	77583416	75,5	28,5	25,0	4,5 Kg
IMG 88 - 130 H1* with SinterGrip jaws **STD**	77583411H1	65,5	18,5	15,0	4,5 Kg
IMG 88 - 130 H1* with SinterGrip jaws **ALU**	77583412H1	65,5	18,5	15,0	4,5 Kg
IMG 88 - 130 H1* with SinterGrip jaws **HRC**	77583413H1	65,5	18,5	15,0	4,5 Kg
IMG 88 - 130 H1* with SinterGrip jaws **PLM** (for polymer materials)	77583416H1	65,5	18,5	15,0	4,5 Kg
IMG 88 - 130 **Basic**	77583414	75,5	28,5	25,0	4,5 Kg
IMG 88 - 130 **Basic** H1*	77583414H1	65,5	18,5	15,0	4,5 Kg
IMG 88 - 130 body only	77583401	-	-	-	3,5 Kg

* Compatible in height with other vices on the market

IMG 88 - 130

■ Patented protected screw

Self-centering

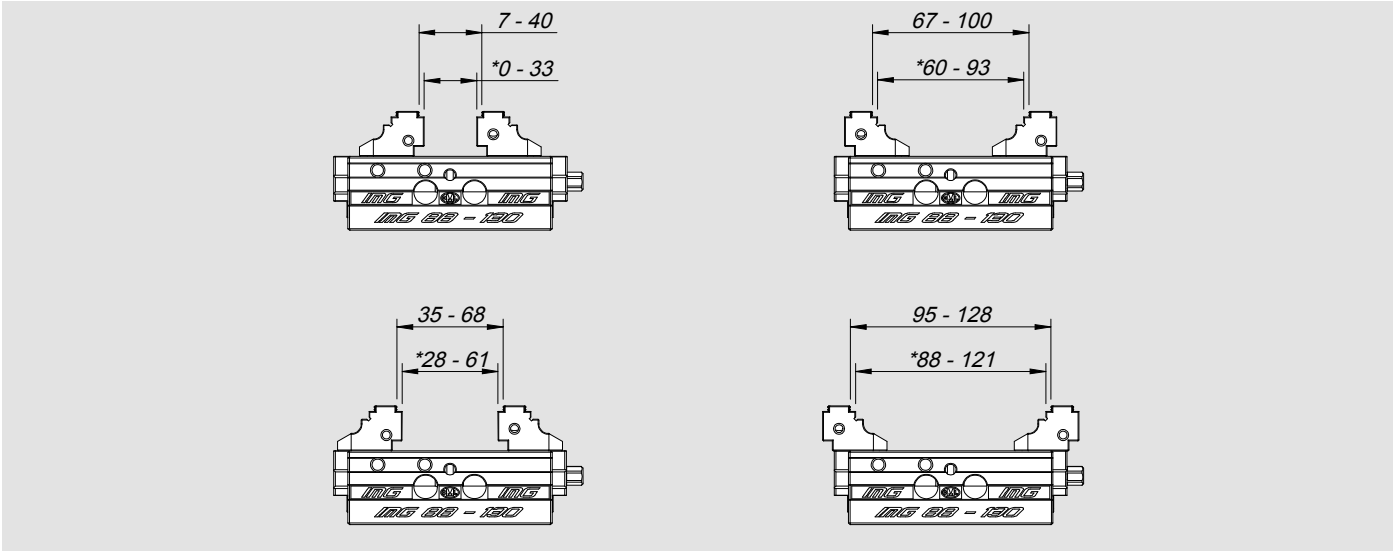

Double Clamping

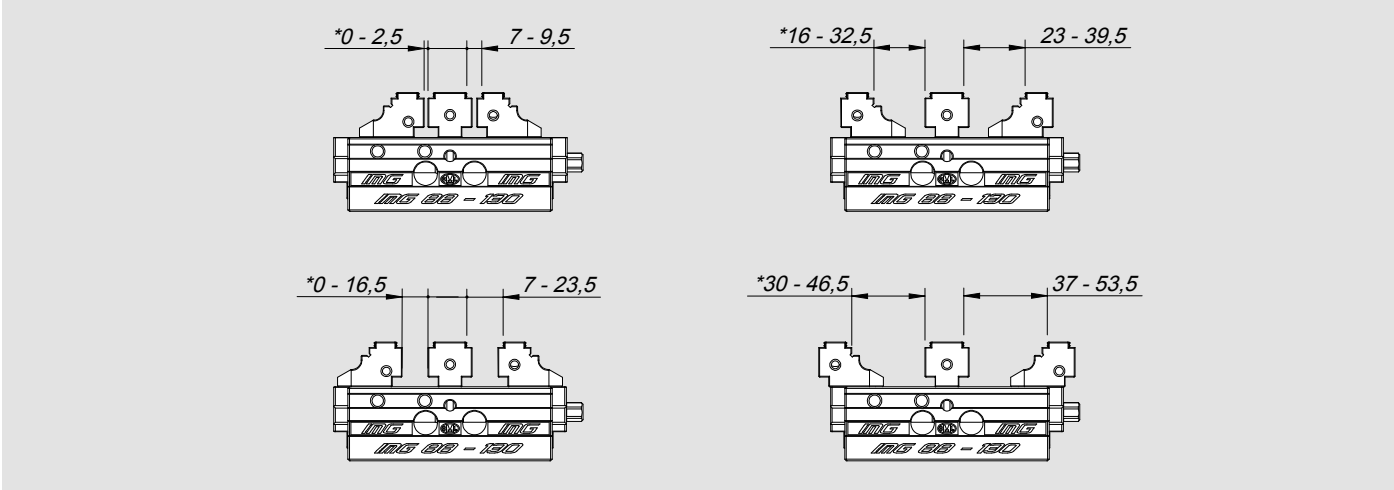

Fixed

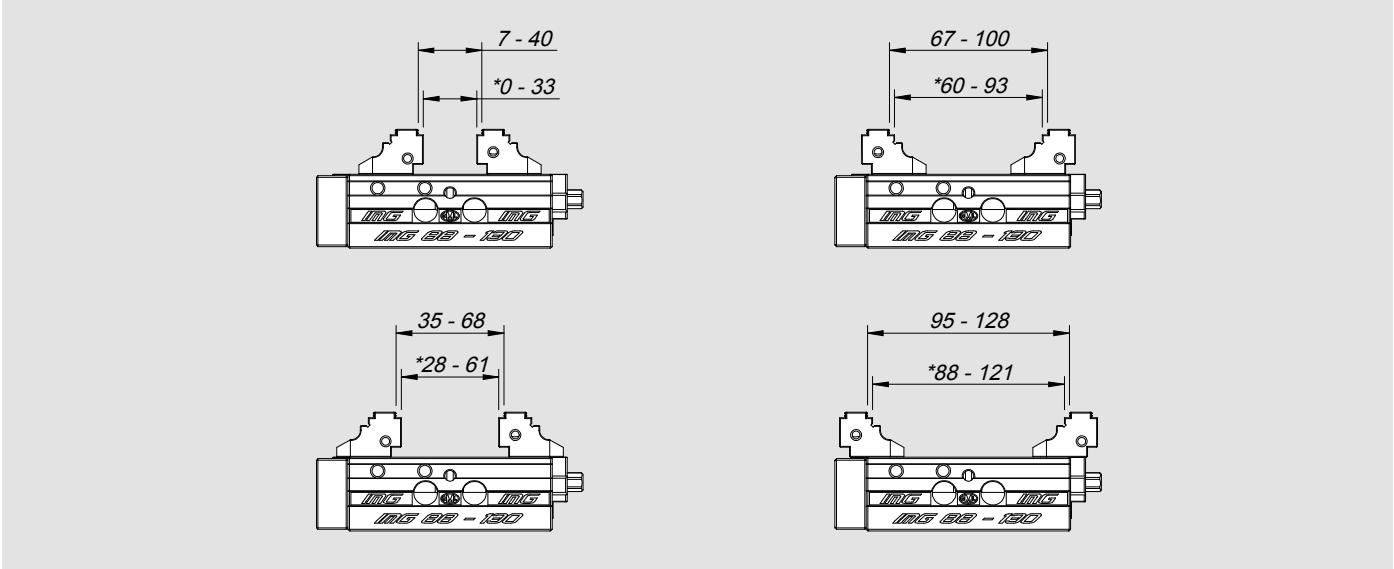

* Opening with smooth jaws

Valid dimensions for SinterGrip, H1 and Basic type

IMG 88 - 230

Self-centering vice | Double Clamping | Fixed

■ Patented protected screw

Applications / Customer Benefits

- Highly precise self-centering clamping with maximum repeatability
- Totally protected
- Compact design for better accessibility and very large drainage slots
- Jaws with SinterGrip clamping inserts for minimum workpiece clamping depth without pre-machining
- Type **IMG BASIC** with jaws without SinterGrip inserts
- Wide clamping range
- Ideal for OP 10 and OP 20

Technical features

- Self-centering clamping
- Clamping force up to 32 kN (50 Nm)
- Jaw width 87,5 mm
- Through-holes for frontal clamping on cubes and plates
- Interface for zero point systems APS / TDM and Plus 5 52 mm as standard

Standard equipment

Wrench, jaws, nr. 10 Sintergrip inserts.

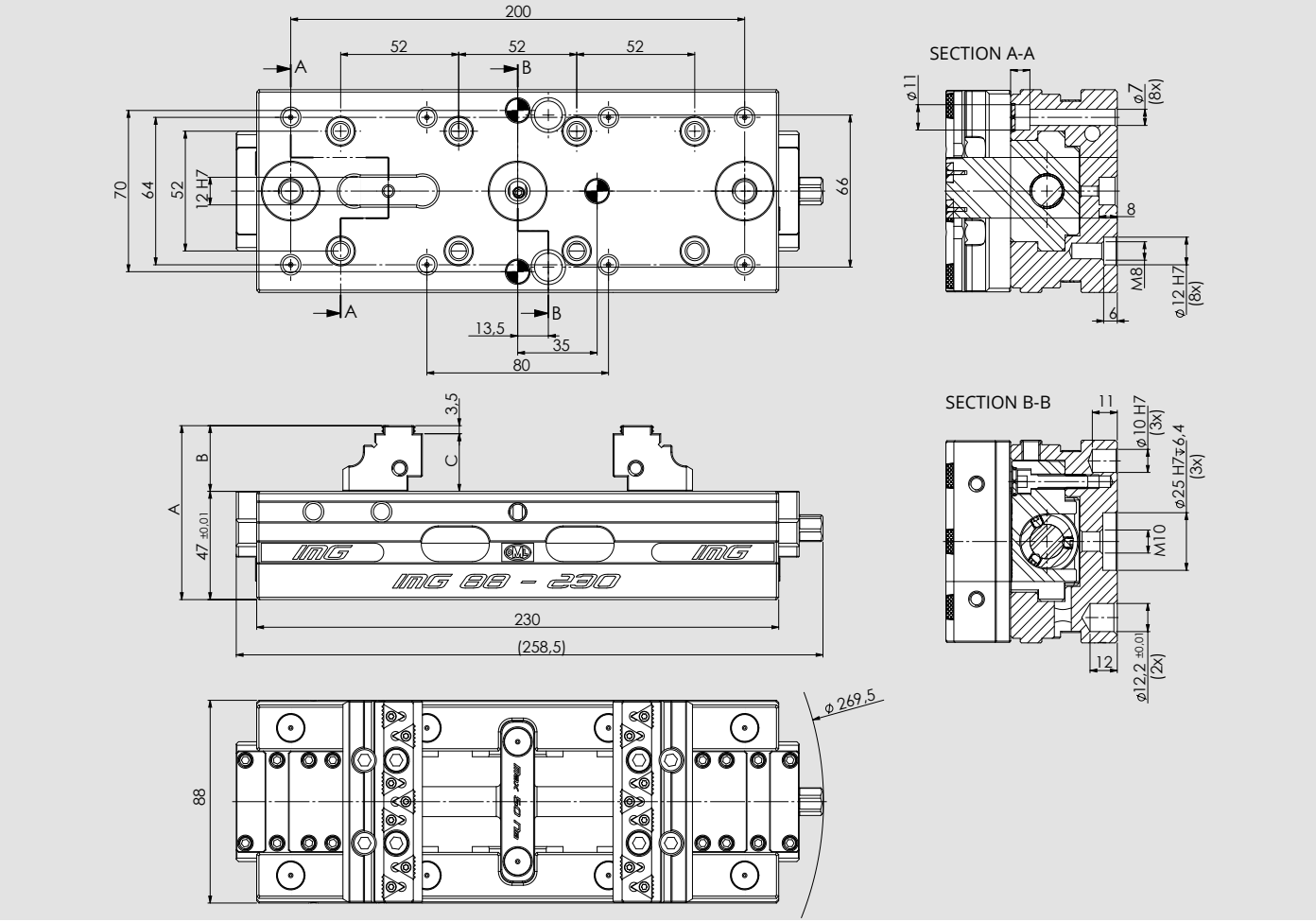

Type	Id. No.	A	B	C	Weight
IMG 88 - 230 with SinterGrip jaws **STD**	77583421	75,5	28,5	25,0	7,5 Kg
IMG 88 - 230 with SinterGrip jaws **ALU**	77583422	75,5	28,5	25,0	7,5 Kg
IMG 88 - 230 with SinterGrip jaws **HRC**	77583423	75,5	28,5	25,0	7,5 Kg
IMG 88 - 230 with SinterGrip jaws **PLM** (for polymer materials)	77583426	75,5	28,5	25,0	7,5 Kg
IMG 88 - 230 H1* with SinterGrip jaws **STD**	77583421H1	65,5	18,5	15,0	7,5 Kg
IMG 88 - 230 H1* with SinterGrip jaws **ALU**	77583422H1	65,5	18,5	15,0	7,5 Kg
IMG 88 - 230 H1* with SinterGrip jaws **HRC**	77583423H1	65,5	18,5	15,0	7,5 Kg
IMG 88 - 230 H1* with SinterGrip jaws **PLM** (for polymer materials)	77583426H1	65,5	18,5	15,0	7,5 Kg
IMG 88 - 230 **Basic**	77583424	75,5	28,5	25,0	7,5 Kg
IMG 88 - 230 H1* **Basic**	77583424H1	65,5	18,5	15,0	7,5 Kg
IMG 88 - 230 body only	77583402	-	-	-	6,5 Kg

* Compatible in height with other vices on the market

IMG 88 - 230

■ Patented protected screw

Self-centering

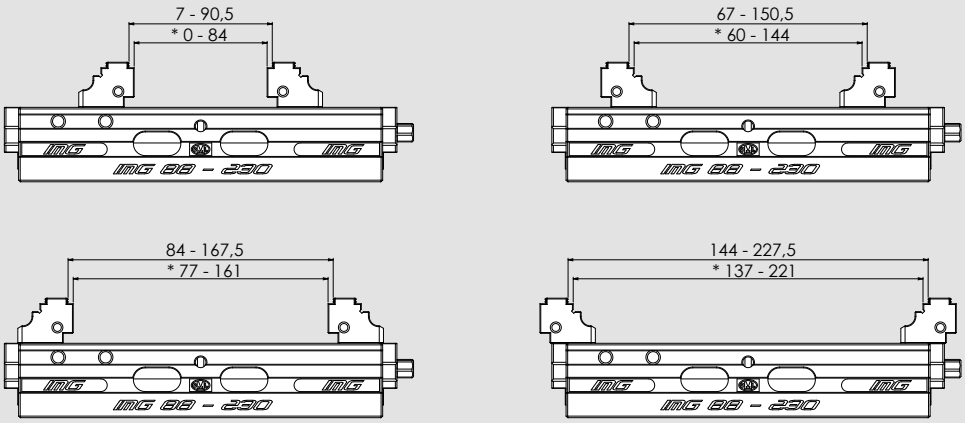

Double Clamping

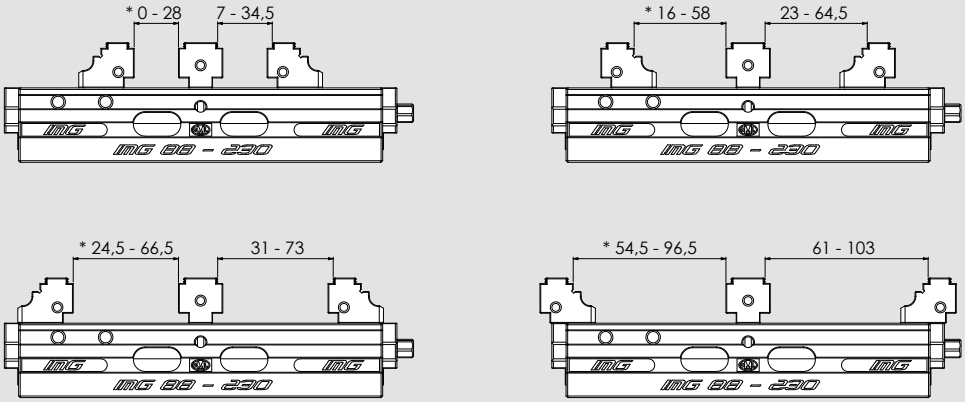

Fixed

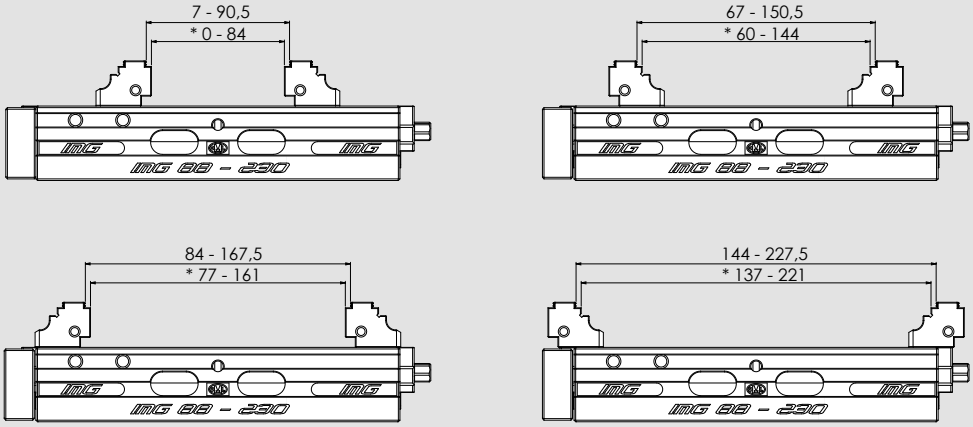

* Opening with smooth jaws

Valid dimensions for SinterGrip, H1 and Basic type

IMG 125 - 180

Self-centering vice | Double Clamping | Fixed

■ Patented protected screw

Applications / Customer Benefits

- Highly precise self-centering clamping with maximum repeatability
- Totally protected
- Compact design for better accessibility and very large drainage slots
- Jaws with SinterGrip clamping inserts for minimum workpiece clamping depth without pre-machining
- Type **IMG BASIC** with jaws without SinterGrip inserts
- Wide clamping range
- Ideal for OP 10 and OP 20

Technical features

- Self-centering clamping
- Clamping force up to 40 kN (80 Nm)
- Jaw width 125 mm
- Through-holes for frontal clamping on cubes and plates
- Interface for zero point systems APS / TDM and Plus 5 52 / 96 mm as standard

Standard equipment

Wrench, jaws, Sintergrip inserts.

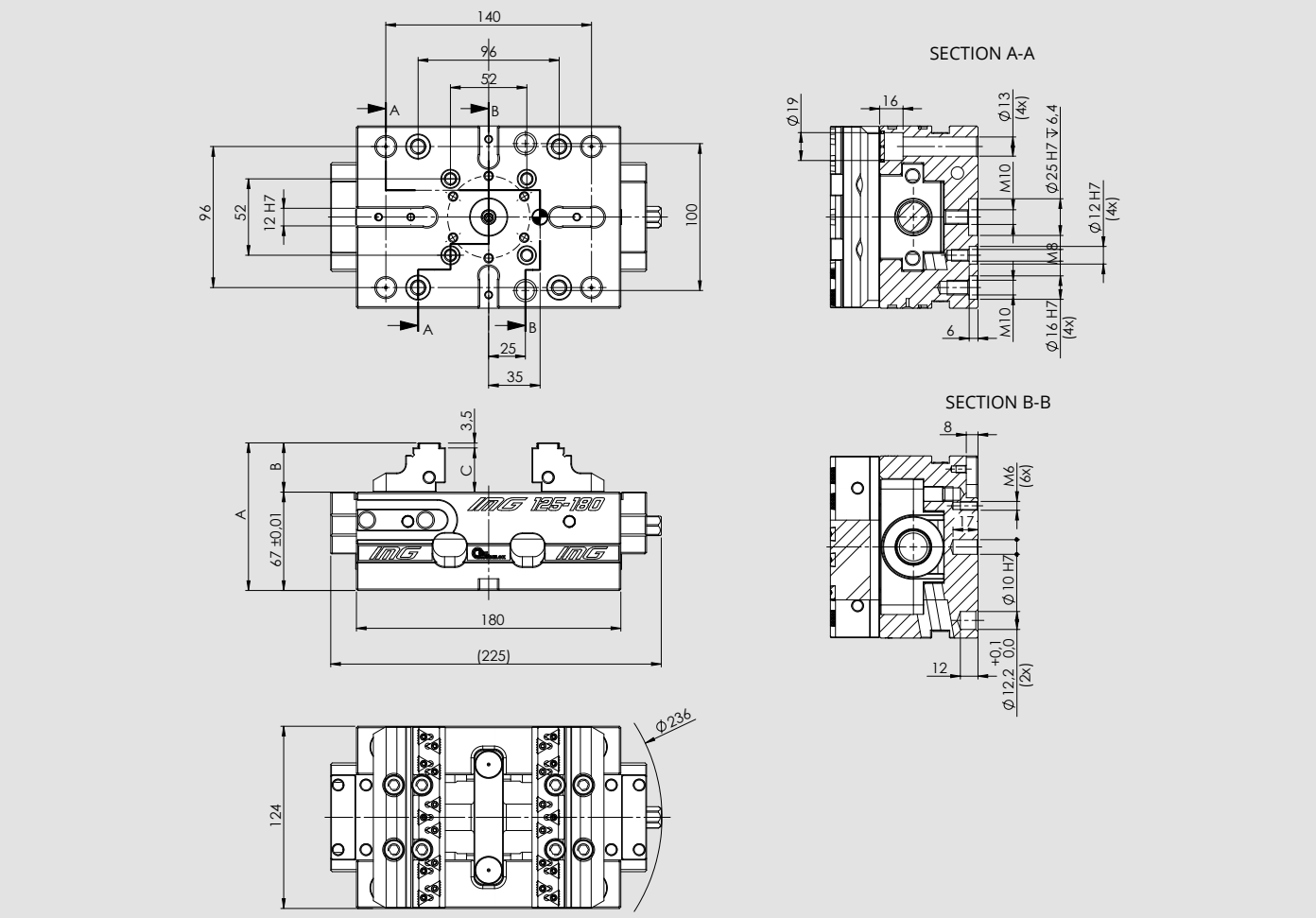

Type	Id. No.	A	B	C	Weight
IMG 125 - 180 with SinterGrip jaws **STD**	77583531	100,5	33,5	30,0	12 Kg
IMG 125 - 180 with SinterGrip jaws **ALU**	77583532	100,5	33,5	30,0	12 Kg
IMG 125 - 180 with SinterGrip jaws **HRC**	77583533	100,5	33,5	30,0	12 Kg
IMG 125 - 180 with SinterGrip jaws **PLM** (for polymer materials)	77583536	100,5	33,5	30,0	12 Kg
IMG 125 - 180 H1* with SinterGrip jaws **STD**	77583531H1	89,5	22,5	19,0	12 Kg
IMG 125 - 180 H1* with SinterGrip jaws **ALU**	77583532H1	89,5	22,5	19,0	12 Kg
IMG 125 - 180 H1* with SinterGrip jaws **HRC**	77583533H1	89,5	22,5	19,0	12 Kg
IMG 125 - 180 H1* with SinterGrip jaws **PLM** (for polymer materials)	77583536H1	89,5	22,5	19,0	12 Kg
IMG 125 - 180 **Basic**	77583534	100,5	33,5	30,0	12 Kg
IMG 125 - 180 H1* **Basic**	77583534H1	89,5	22,5	19,0	12 Kg
IMG 125 - 180 body only	77583503	-	-	-	10 Kg

* Compatible in height with other vices on the market

IMG 125 - 180

■ Patented protected screw

Self-centering

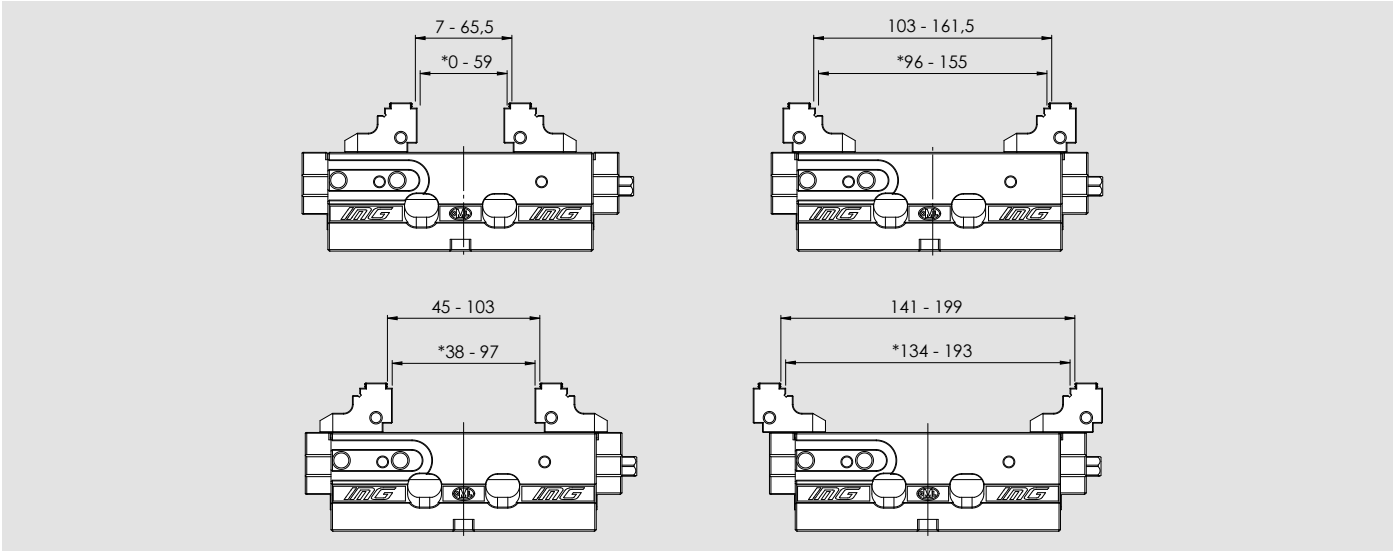

Double Clamping

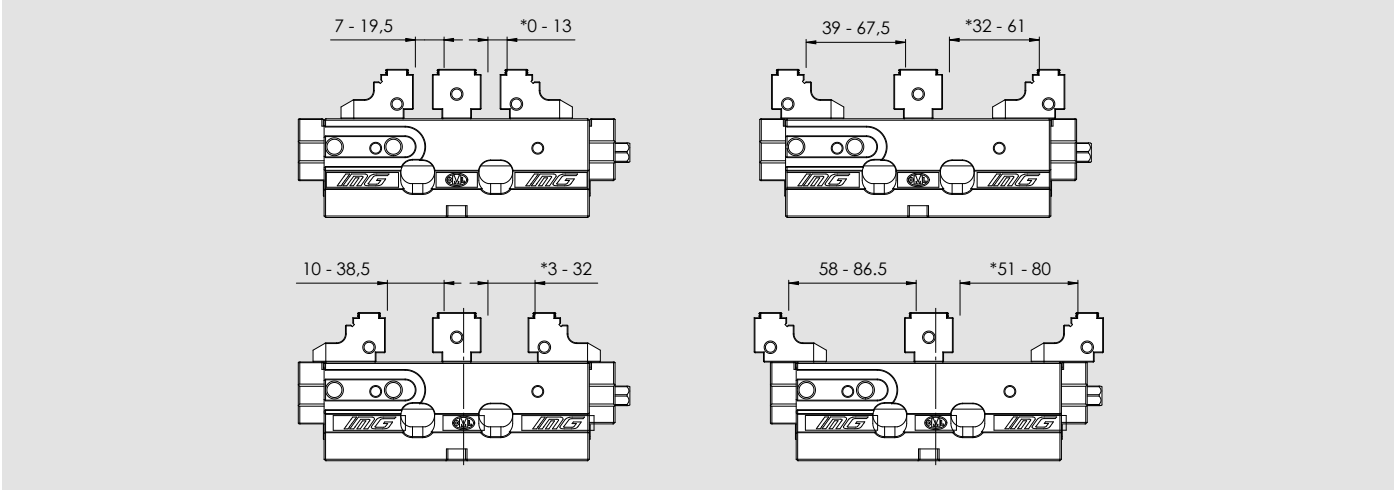

Fixed

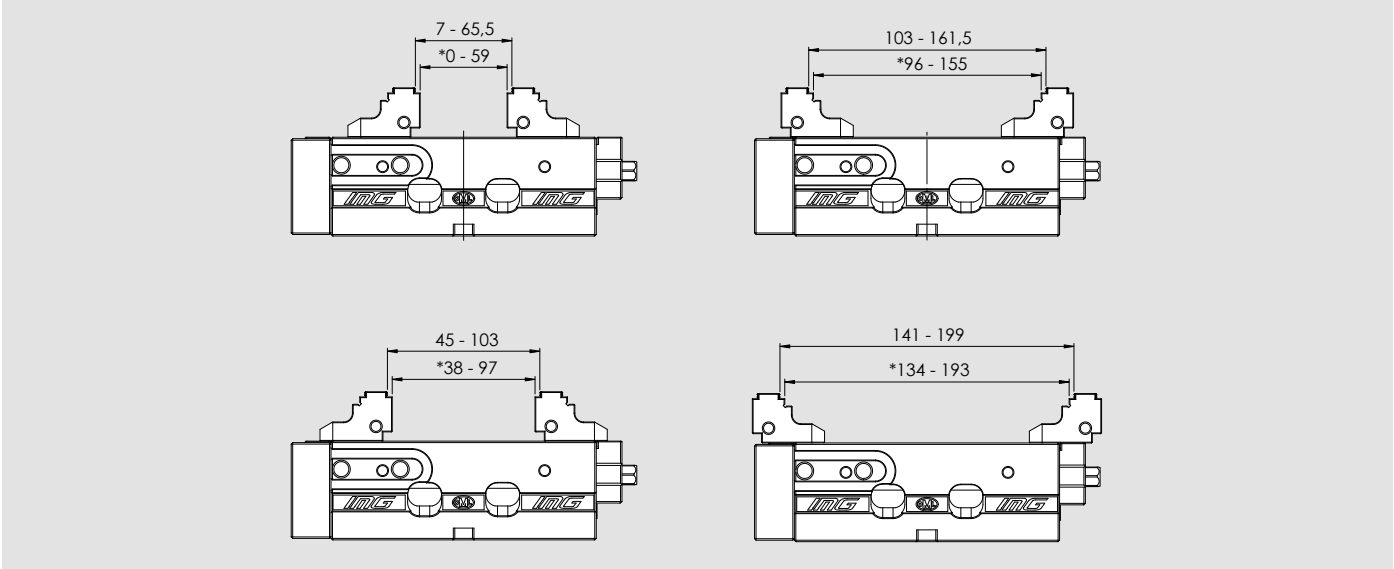

* Opening with smooth jaws

Valid dimensions for SinterGrip, H1 and Basic type

IMG 125 - 220

Self-centering vice | Double Clamping | Fixed

■ Patented protected screw

Applications / Customer Benefits

- Highly precise self-centering clamping with maximum repeatability
- Totally protected
- Compact design for better accessibility and very large drainage slots
- Jaws with SinterGrip clamping inserts for minimum workpiece clamping depth without pre-machining
- Type **IMG BASIC** with jaws without SinterGrip inserts
- Wide clamping range
- Ideal for OP 10 and OP 20

Technical features

- Self-centering clamping
- Clamping force up to 40 kN (80 Nm)
- Jaw width 125 mm
- Through-holes for frontal clamping on cubes and plates
- Interface for zero point systems APS / TDM and Plus 5 52 / 96 mm as standard

Standard equipment

Wrench, jaws, Sintergrip inserts.

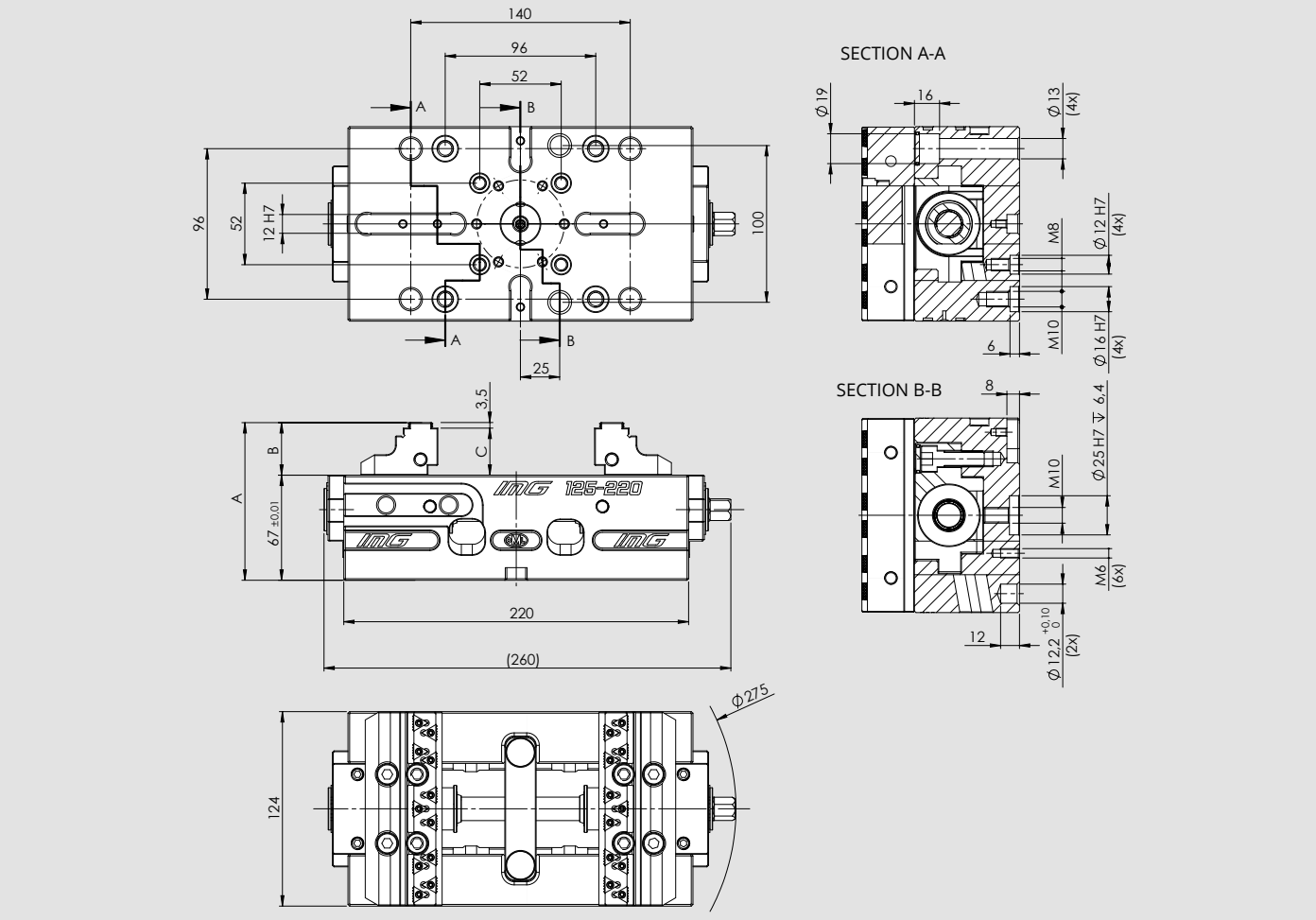

Type	Id. No.	A	B	C	Weight
IMG 125 - 220 with SinterGrip jaws **STD**	77583511	100,5	33,5	30,0	15 Kg
IMG 125 - 220 with SinterGrip jaws **ALU**	77583512	100,5	33,5	30,0	15 Kg
IMG 125 - 220 with SinterGrip jaws **HRC**	77583513	100,5	33,5	30,0	15 Kg
IMG 125 - 220 with SinterGrip jaws **PLM** (for polymer materials)	77583516	100,5	33,5	30,0	15 Kg
IMG 125 - 220 H1* with SinterGrip jaws **STD**	77583511H1	89,5	22,5	19,0	15 Kg
IMG 125 - 220 H1* with SinterGrip jaws **ALU**	77583512H1	89,5	22,5	19,0	15 Kg
IMG 125 - 220 H1* with SinterGrip jaws **HRC**	77583513H1	89,5	22,5	19,0	15 Kg
IMG 125 - 220 H1* with SinterGrip jaws **PLM** (for polymer materials)	77583516H1	89,5	22,5	19,0	15 Kg
IMG 125 - 220 **Basic**	77583514	100,5	33,5	30,0	15 Kg
IMG 125 - 220 H1* **Basic**	77583514H1	89,5	22,5	19,0	15 Kg
IMG 125 - 220 body only	77583501	-	-	-	10 Kg

* Compatible in height with other vices on the market

IMG 125 - 220

■ Patented protected screw

Self-centering

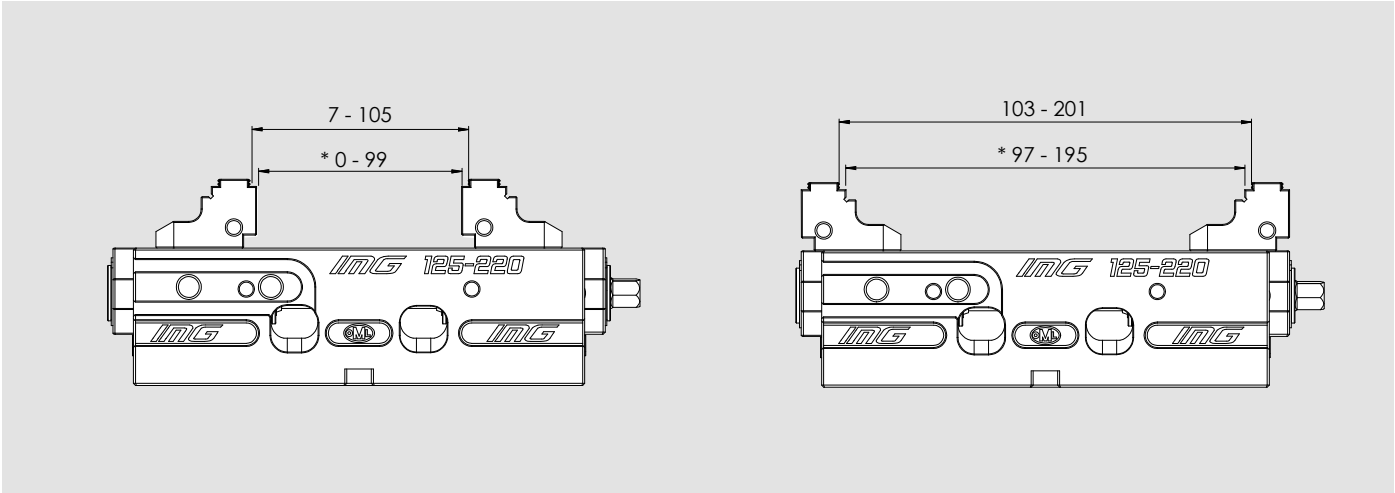

Double Clamping

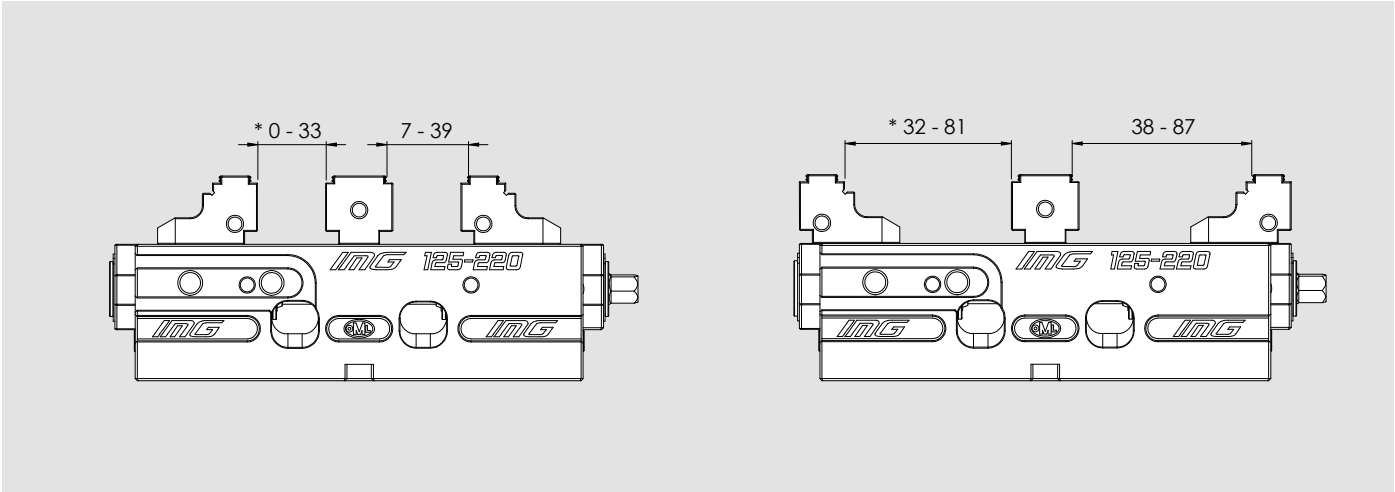

Fixed

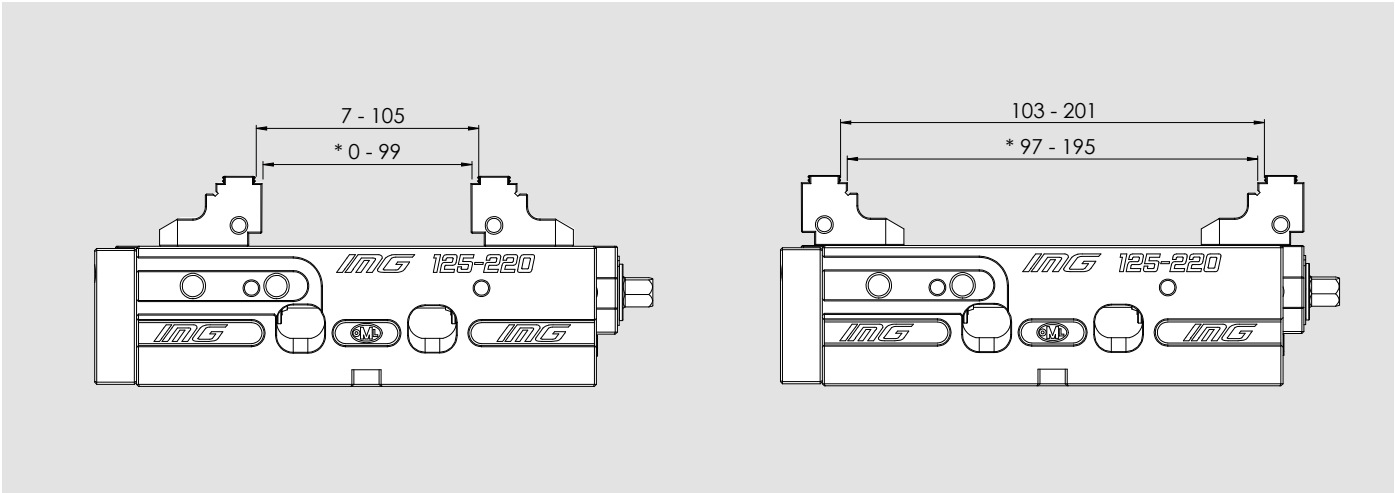

* Opening with smooth jaws

Valid dimensions for SinterGrip, H1 and Basic type

IMG 125 - 320

Self-centering vice | Double Clamping | Fixed

■ Patented protected screw

Applications / Customer Benefits

- Highly precise self-centering clamping with maximum repeatability
- Totally protected
- Compact design for better accessibility and very large drainage slots
- Jaws with SinterGrip clamping inserts for minimum workpiece clamping depth without pre-machining
- Type **IMG BASIC** with jaws without SinterGrip inserts
- Wide clamping range
- Ideal for OP 10 and OP 20

Technical features

- Self-centering clamping
- Clamping force up to 40 kN (80 Nm)
- Jaw width 125 mm
- Through-holes for frontal clamping on cubes and plates
- Interface for zero point systems APS / TDM and Plus 5 96 mm as standard

Standard equipment

Wrench, jaws, Sintergrip inserts.

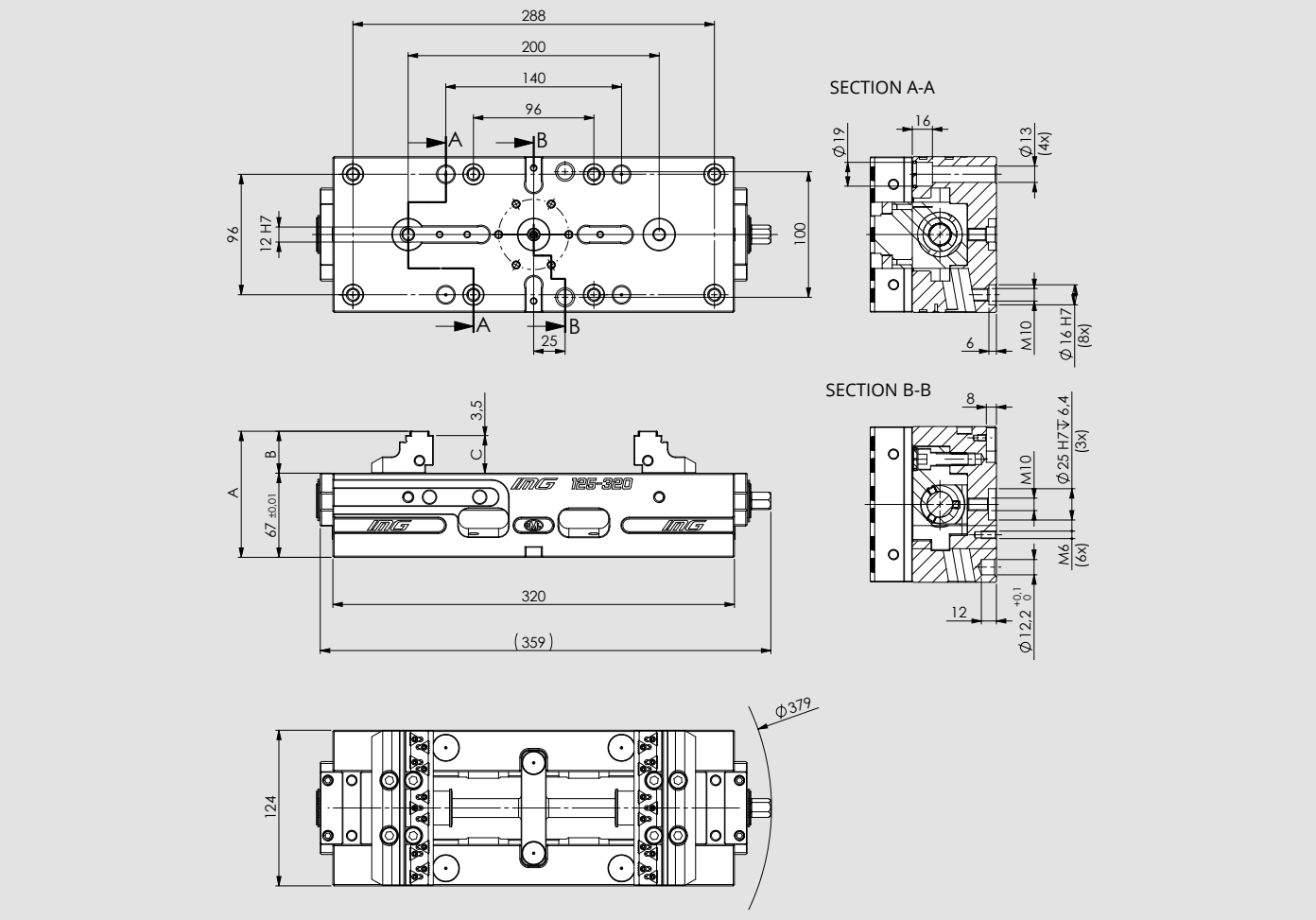

Type	Id. No.	A	B	C	Weight
IMG 125 - 320 with SinterGrip jaws **STD**	77583521	100,5	33,5	30,0	20 Kg
IMG 125 - 320 with SinterGrip jaws **ALU**	77583522	100,5	33,5	30,0	20 Kg
IMG 125 - 320 with SinterGrip jaws **HRC**	77583523	100,5	33,5	30,0	20 Kg
IMG 125 - 320 with SinterGrip jaws **PLM** (for polymer materials)	77583526	100,5	33,5	30,0	20 Kg
IMG 125 - 320 H1* with SinterGrip jaws **STD**	77583521H1	89,5	22,5	19,0	20 Kg
IMG 125 - 320 H1* with SinterGrip jaws **ALU**	77583522H1	89,5	22,5	19,0	20 Kg
IMG 125 - 320 H1* with SinterGrip jaws **HRC**	77583523H1	89,5	22,5	19,0	20 Kg
IMG 125 - 320 H1* with SinterGrip jaws **PLM** (for polymer materials)	77583526H1	89,5	22,5	19,0	20 Kg
IMG 125 - 320 **Basic**	77583524	100,5	33,5	30,0	20 Kg
IMG 125 - 320 H1* **Basic**	77583524H1	89,5	22,5	19,0	20 Kg
IMG 125 - 320 body only	77583502	-	-	-	18 Kg

* Compatible in height with other vices on the market

IMG 125 - 320

■ Patented protected screw

Self-centering

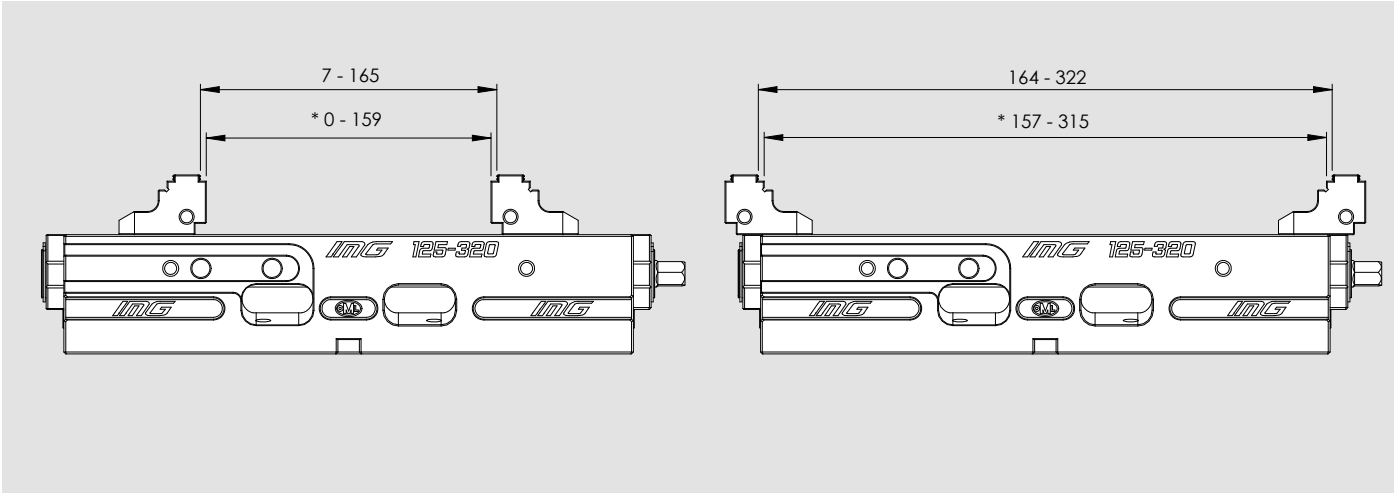

Double Clamping

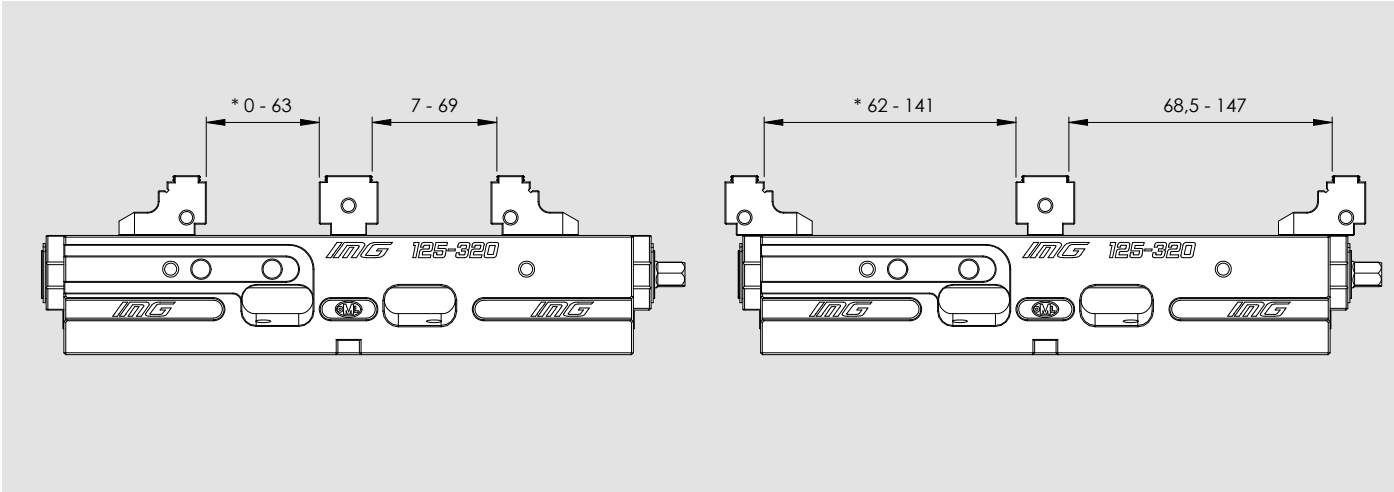

Fixed

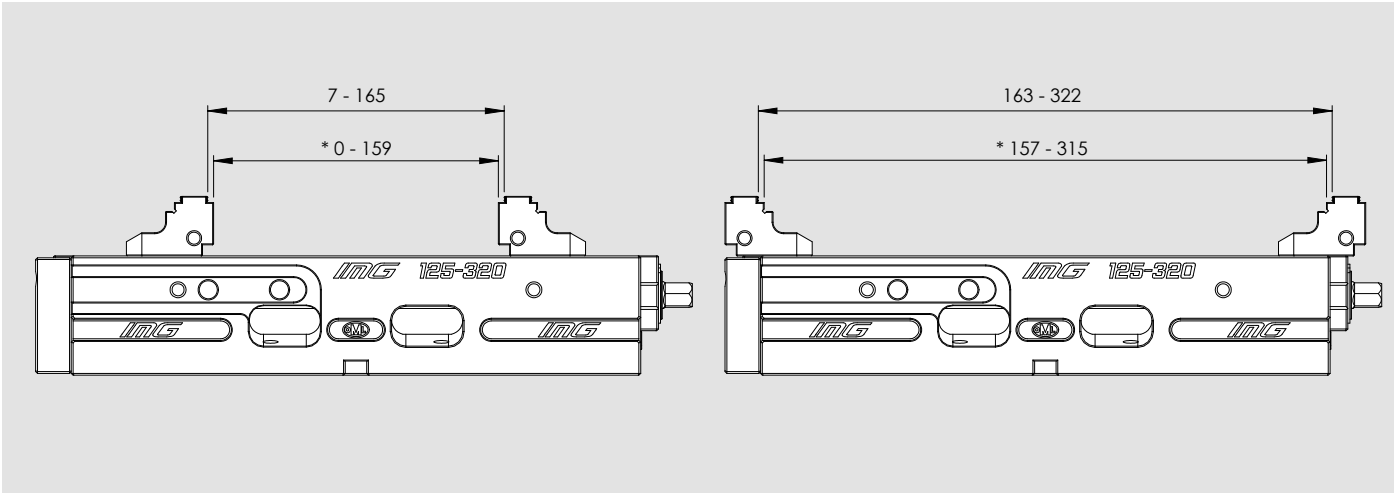

* Opening with smooth jaws

Valid dimensions for SinterGrip, H1 and Basic type

IMG 160 - 270

Self-centering vice | Double Clamping | Fixed

■ Patented protected screw

Applications / Customer Benefits

- Highly precise self-centering clamping with maximum repeatability
- Totally protected
- Compact design for better accessibility and very large drainage slots
- Jaws with SinterGrip clamping inserts for minimum workpiece clamping depth without pre-machining
- Type **IMG BASIC** with jaws without SinterGrip inserts
- Wide clamping range
- Ideal for OP 10 and OP 20

Technical features

- Self-centering clamping
- Clamping force up to 50 kN (100 Nm)
- Jaw width 160 mm
- Through-holes for frontal clamping on cubes and plates
- Interface for zero point systems APS / TDM and Plus 5 96 mm as standard

Standard equipment

Wrench, jaws, Sintergrip inserts.

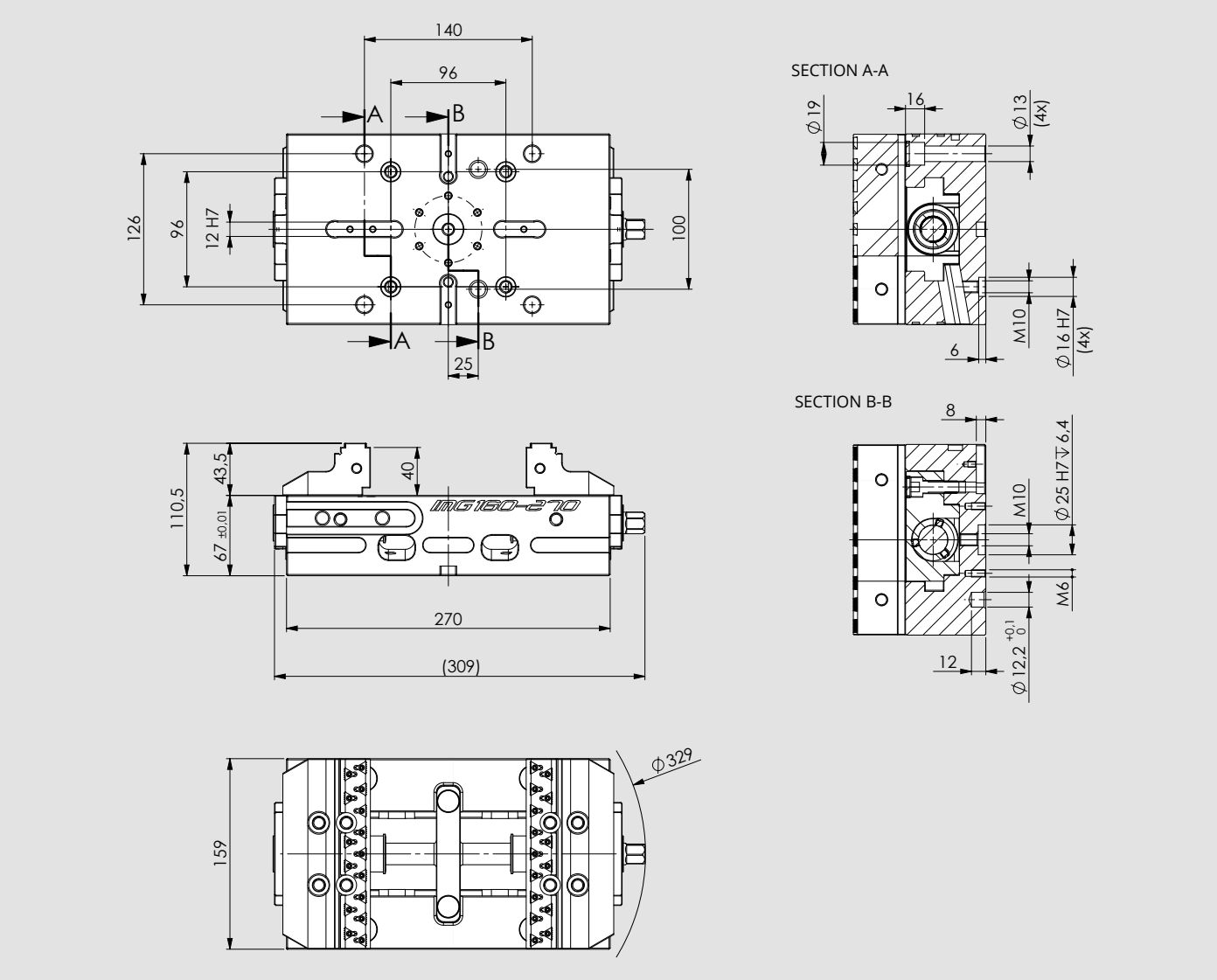

Type	Id. No.	Weight
IMG 160 - 270 with SinterGrip jaws **STD**	77583611	22 Kg
IMG 160 - 270 with SinterGrip jaws **ALU**	77583612	22 Kg
IMG 160 - 270 with SinterGrip jaws **HRC**	77583613	22 Kg
IMG 160 - 270 with SinterGrip jaws **PLM** (for polymer materials)	77583616	22 Kg
IMG 160 - 270 **Basic**	77583614	22 Kg
IMG 160 - 270 body only	77583601	17 Kg

IMG 160 - 270

■ Patented protected screw

Self-centering

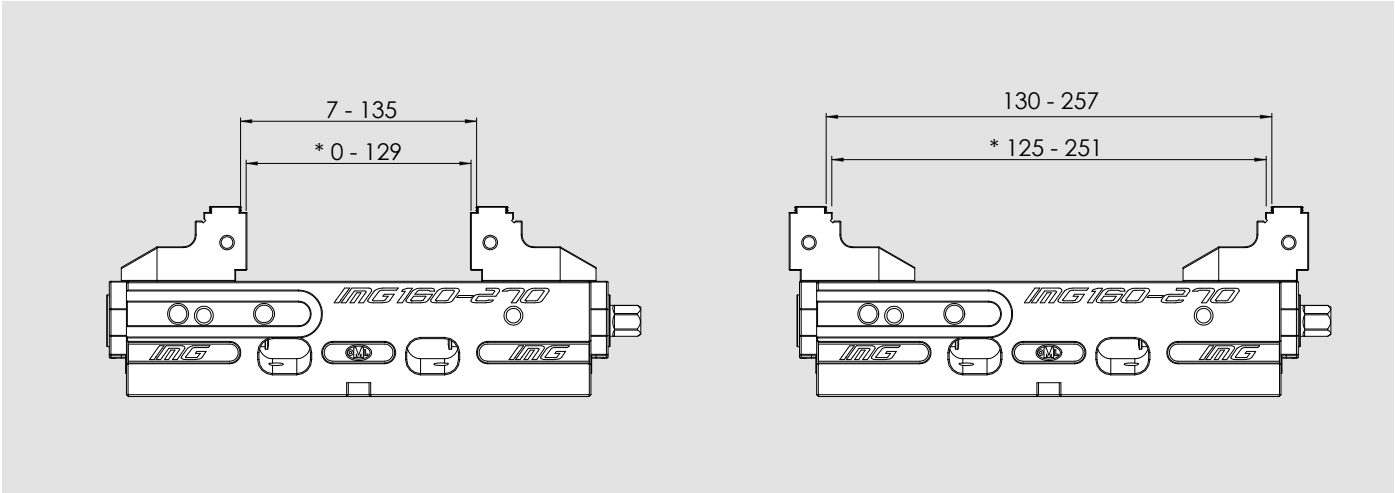

Double Clamping

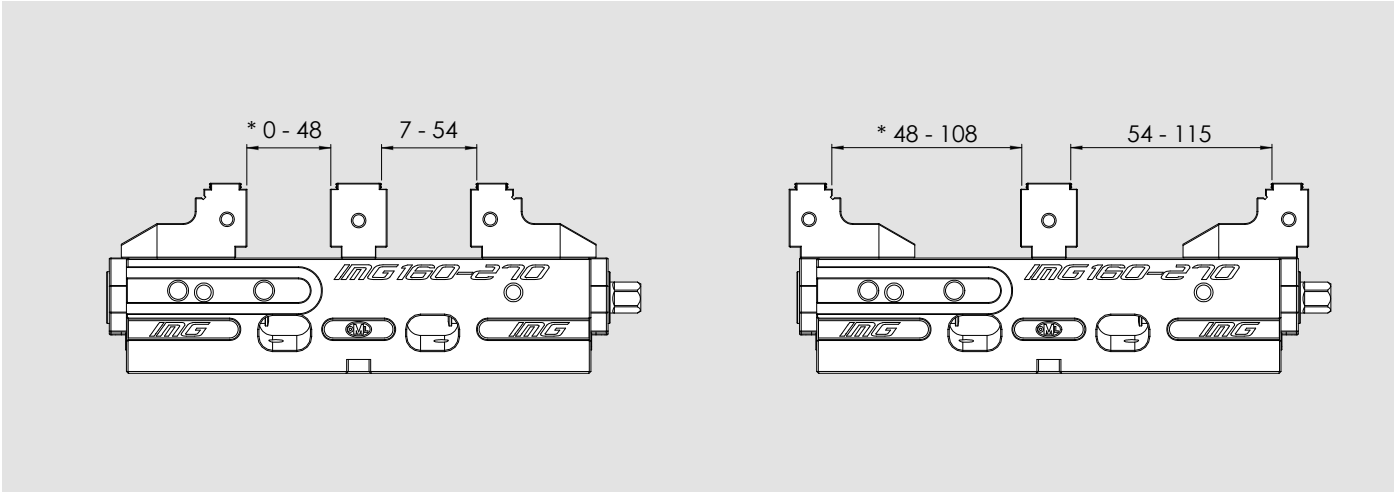

Fixed

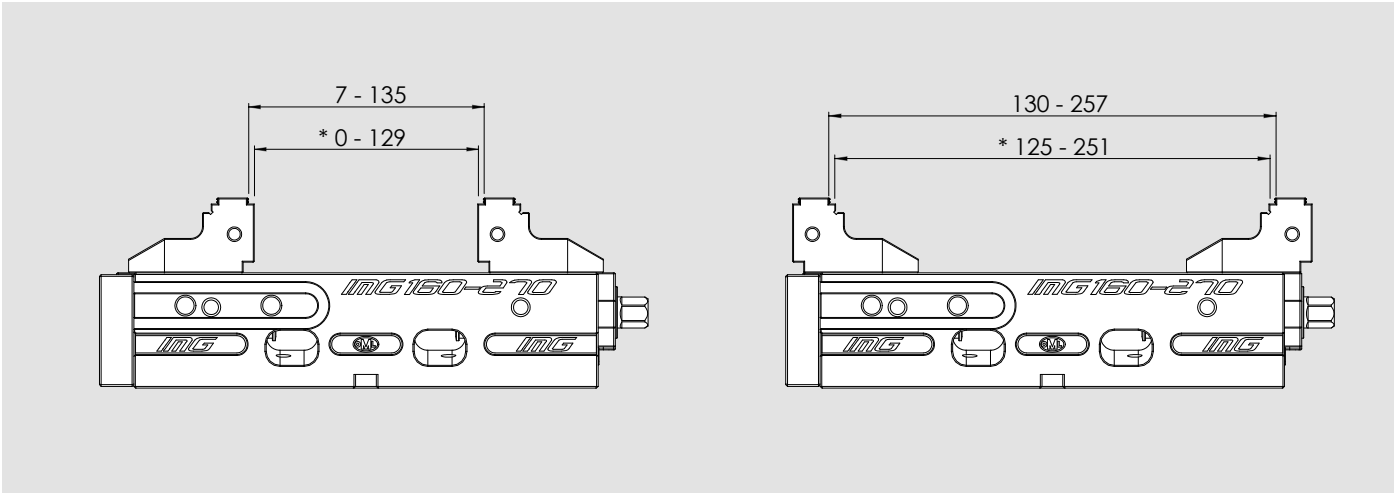

* Opening with smooth jaws

Valid dimensions for both SinterGrip and Basic type

IMG 160 - 420

Self-centering vice | Double Clamping | Fixed

■ Patented protected screw

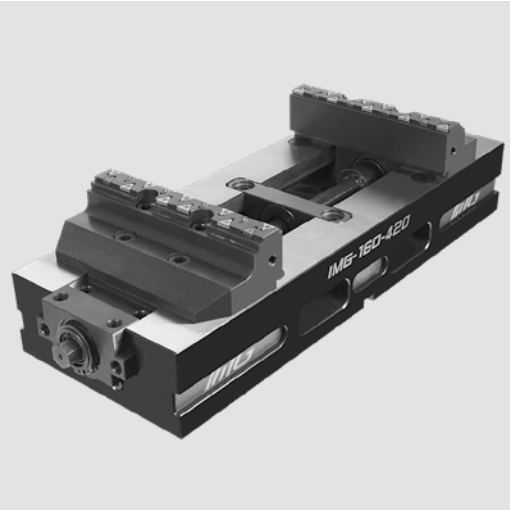

Applications / Customer Benefits

- Highly precise self-centering clamping with maximum repeatability
- Totally protected
- Compact design for better accessibility and very large drainage slots
- Jaws with SinterGrip clamping inserts for minimum workpiece clamping depth without pre-machining
- Type **IMG BASIC** with jaws without SinterGrip inserts
- Wide clamping range
- Ideal for OP 10 and OP 20

Technical features

- Self-centering clamping
- Clamping force up to 50 kN (100 Nm)
- Jaw width 160 mm
- Through-holes for frontal clamping on cubes and plates
- Interface for zero point systems APS / TDM and Plus 5 96 mm as standard

Standard equipment

Wrench, jaws, Sintergrip inserts.

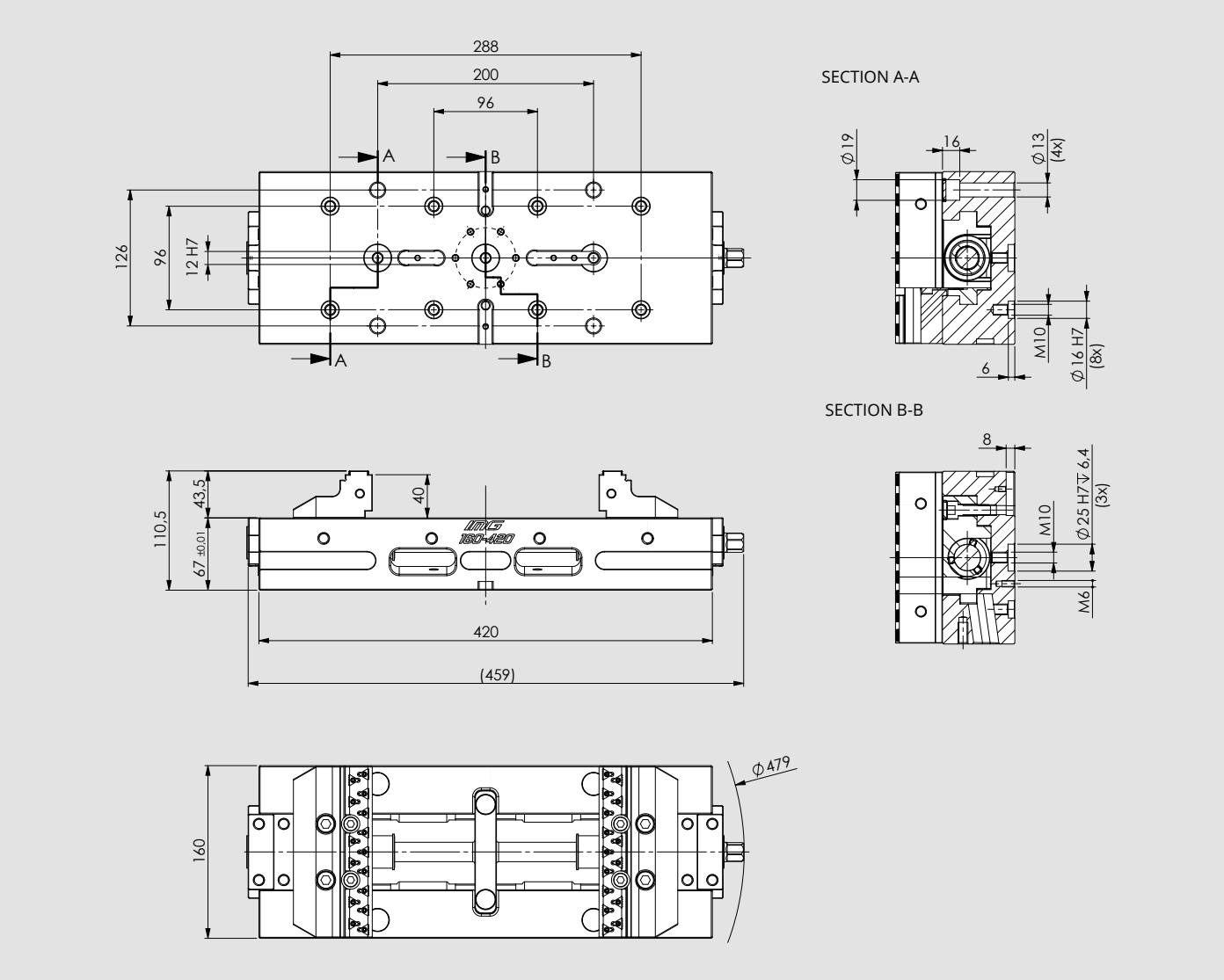

Type	Id. No.	Weight
IMG 160 - 420 with SinterGrip jaws **STD**	77583621	32 Kg
IMG 160 - 420 with SinterGrip jaws **ALU**	77583622	32 Kg
IMG 160 - 420 with SinterGrip jaws **HRC**	77583623	32 Kg
IMG 160 - 420 with SinterGrip jaws **PLM** (for polymer materials)	77583626	32 Kg
IMG 160 - 420 **Basic**	77583624	32 Kg
IMG 160 - 420 body only	77583602	27 Kg

IMG 160 - 420

■ Patented protected screw

Self-centering

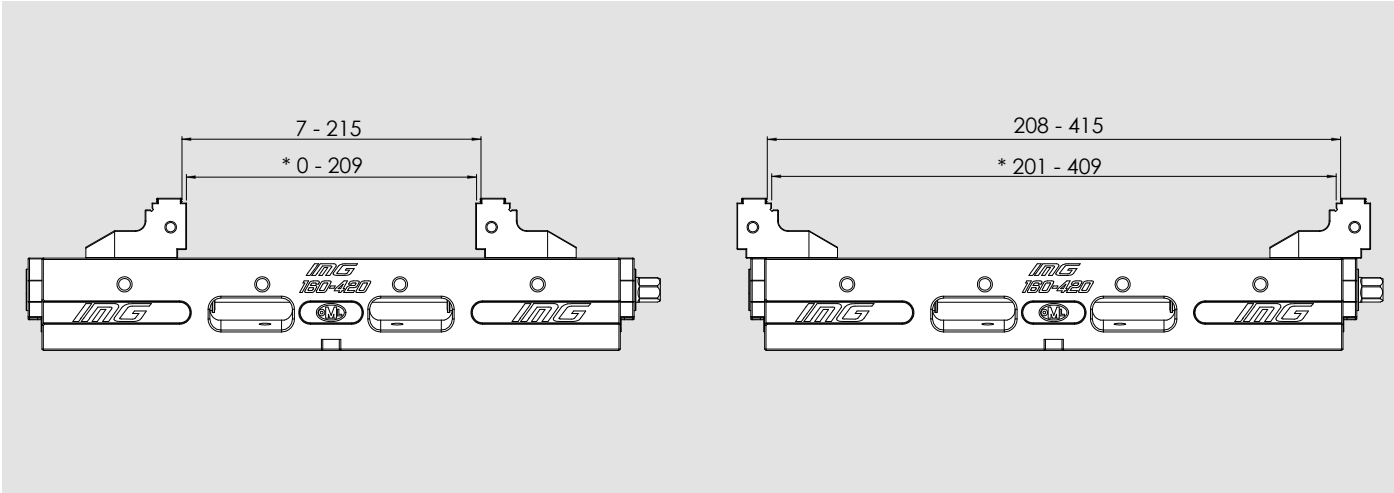

Double Clamping

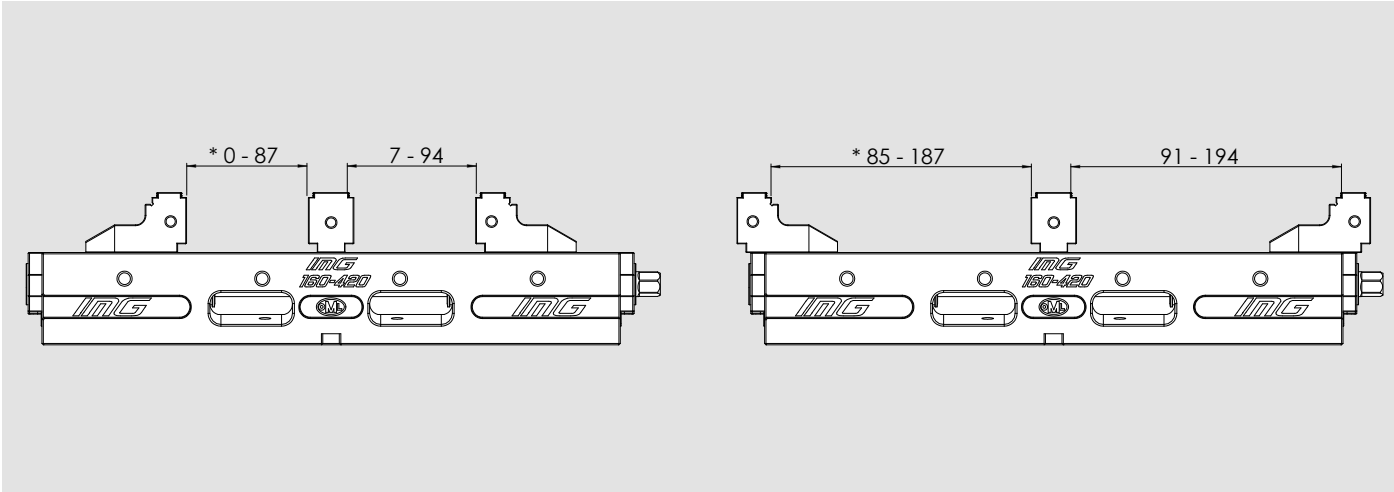

Fixed

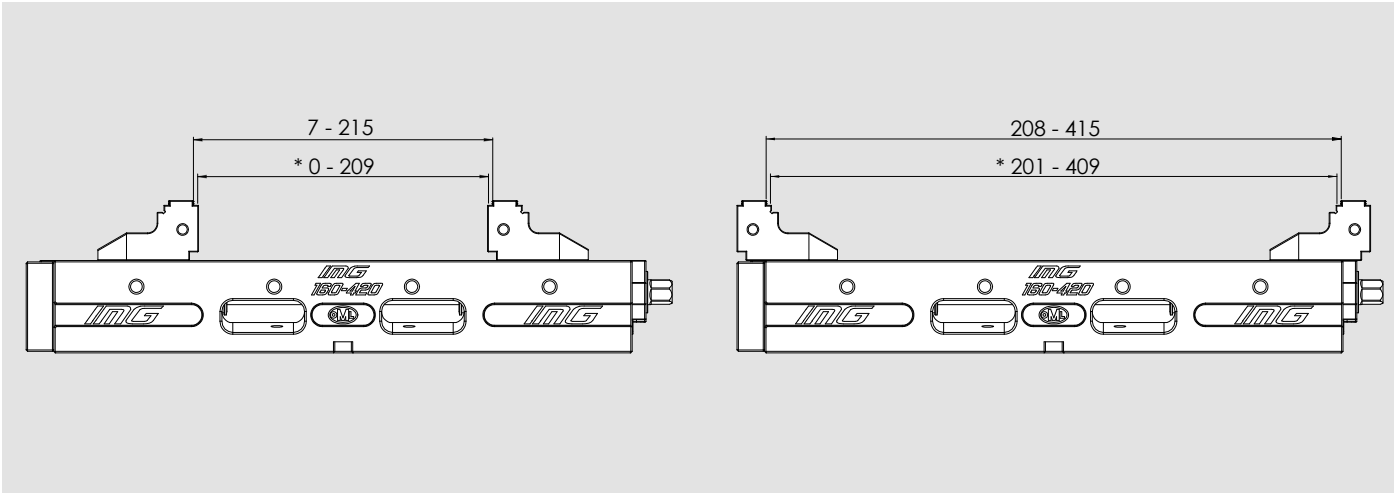

* Opening with smooth jaws

Valid dimensions for both SinterGrip and Basic type

IMG

ACCESSORIES

Extension element

Applications / Customer Benefits

- Ideal for 5 axis machines
- Compact design
- Possibility to be mounted directly on machine tools with T slots
- Possibility to be mounted directly on single plate

Technical features

- Material: steel

Standard equipment

On request: Positioning keys for IMG / APS pins / Positioning keys for machine tool

IMG 125

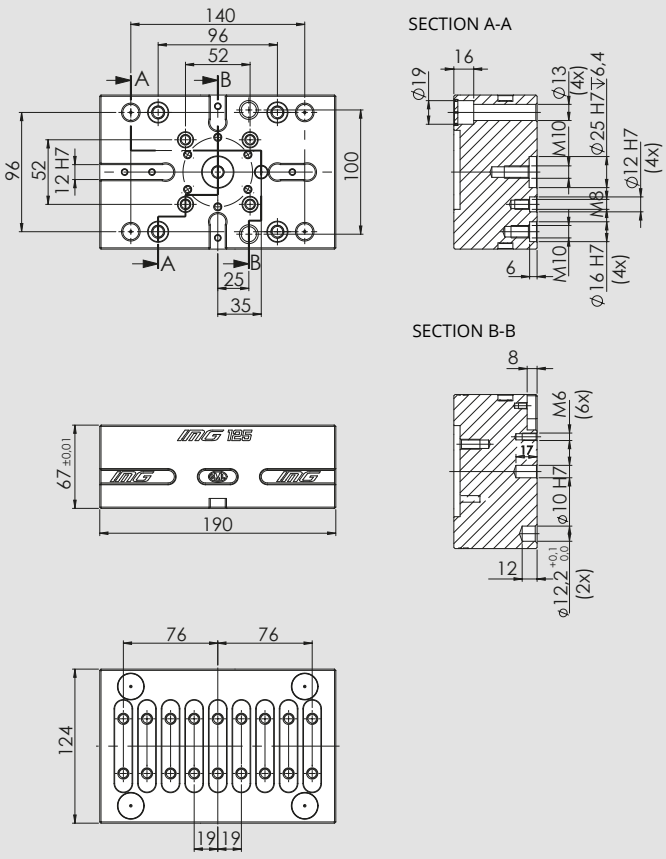

IMG 160

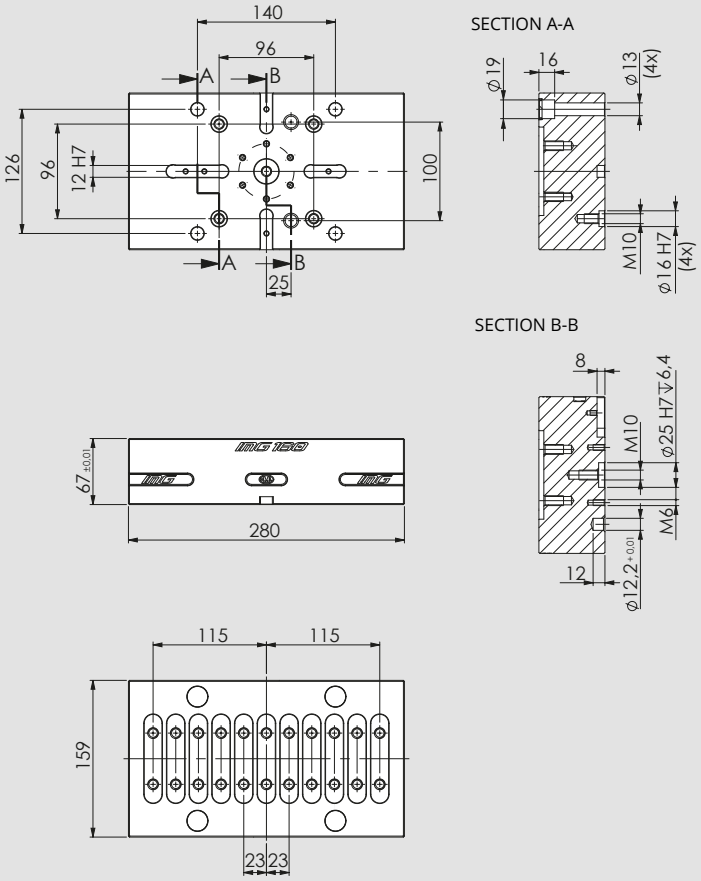

Type	Id. No.
IMG 125	58352119
IMG 160	58362119

The advantages of modularity

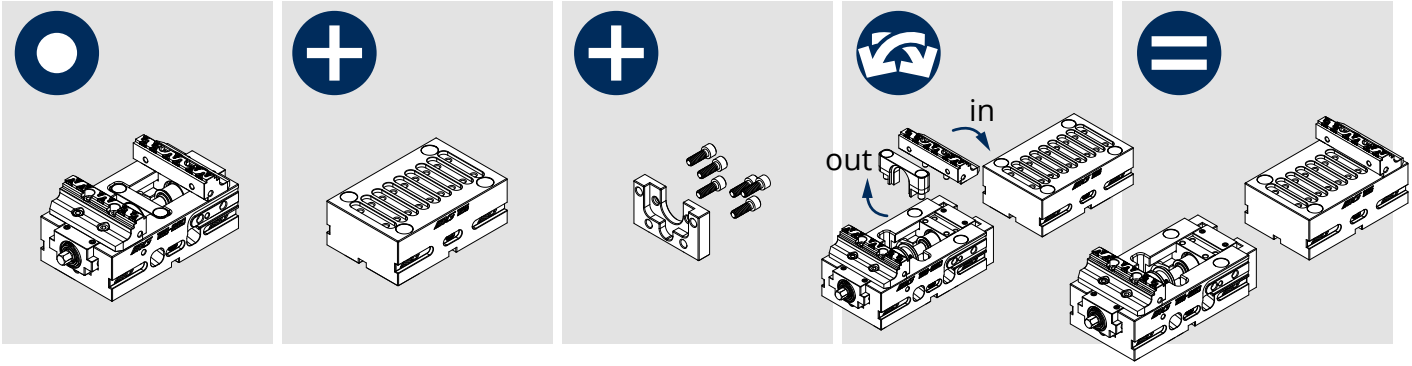

Start | Add | Add | Combine | Result

Application examples

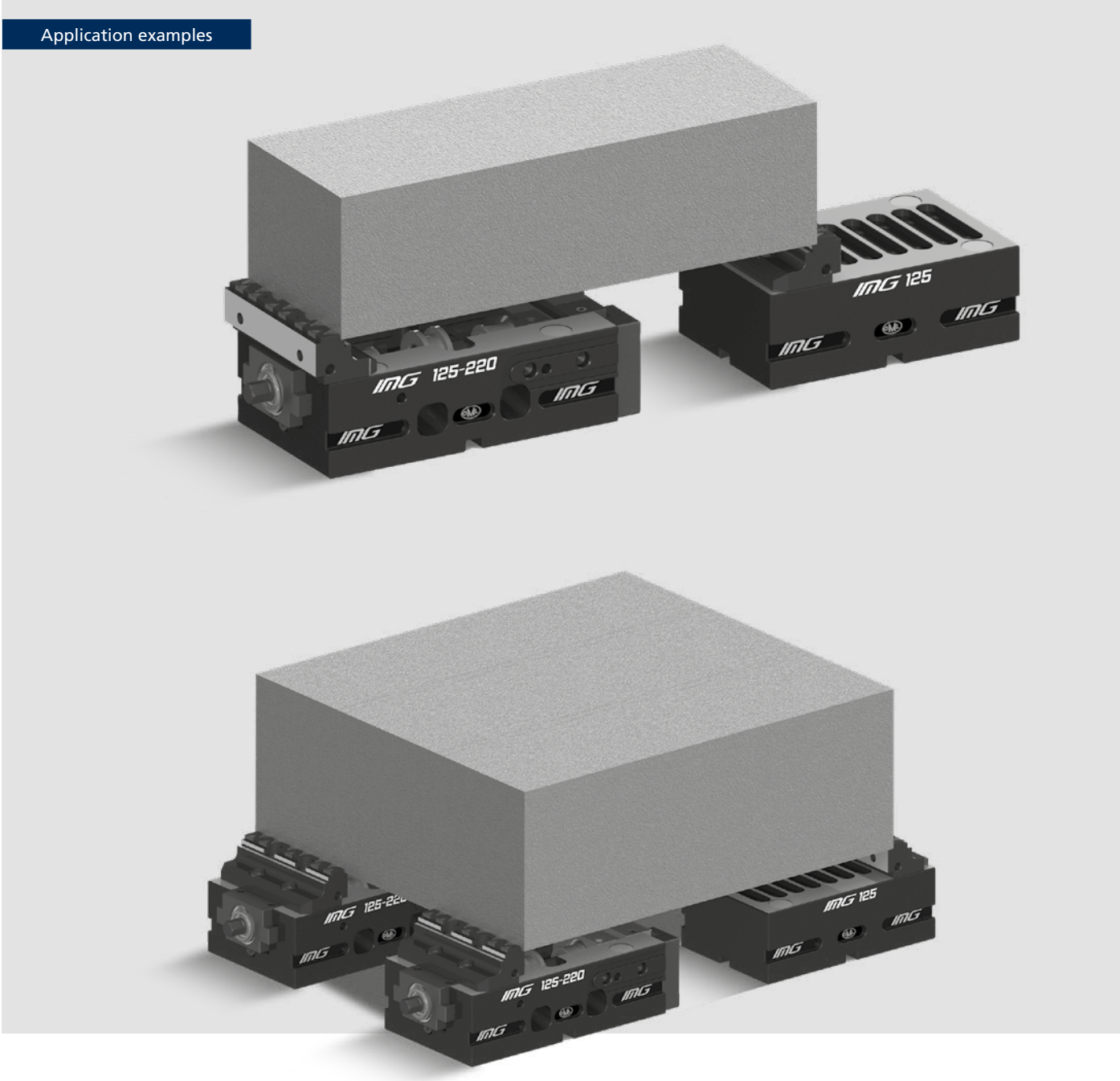

Double clamping jaw (SinterGrip not included, to be specified when ordering)

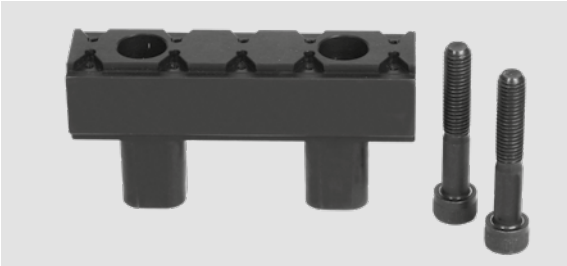

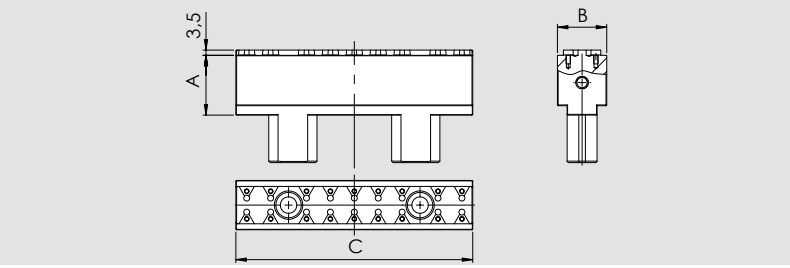

Type	Id. No.	A	B	C	n. seats
IMG 88	58341719	25	28	87,5	8
IMG 88 H1	58341769	15	28	87,5	8
IMG 125	58351719	30	33	123,5	10
IMG 125 H1	58351769	19	33	123,5	10
IMG 160	58361719	40	33	158,5	18

Double clamping smooth jaw

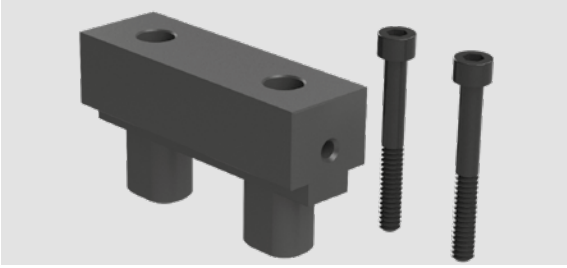

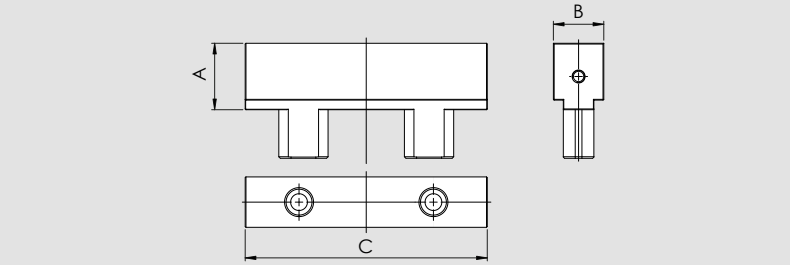

Type	Id. No.	A	B	C
IMG 88	58341739	28,5	28	87,5
IMG 125	58351739	33,5	33	123,5
IMG 160	58361739	43,5	33	158,5

Double clamping jaw BASIC

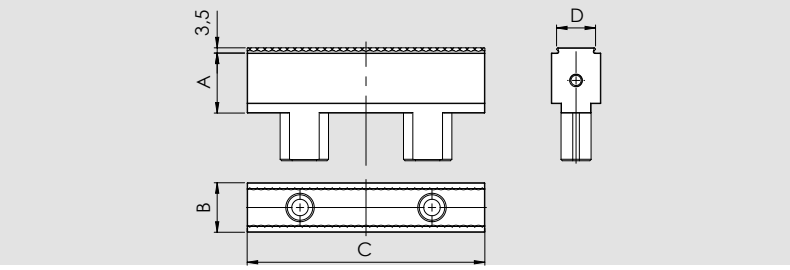

Type	Id. No.	A	B	C	D
IMG 88	58341759	25	28	87,5	21
IMG 88 H1	58341779	15	28	87,5	21
IMG 125	58351759	30	33	123,5	26
IMG 125 H1	58351779	19	33	123,5	26
IMG 160	58361759	40	33	158,5	26

Retainer plate

Type	Id. No.
IMG 88	58341019
IMG 125 - 180	58351039
IMG 125 - 220 / 320	58351019
IMG 160	58361019

Reduced double clamping jaw (SinterGrip not included, to be specified when ordering)

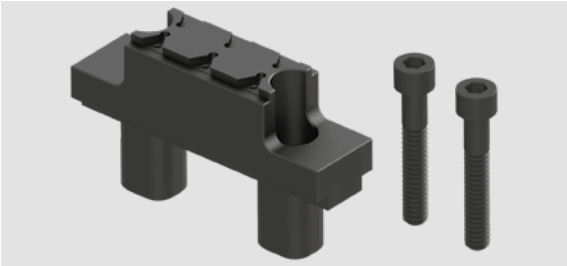

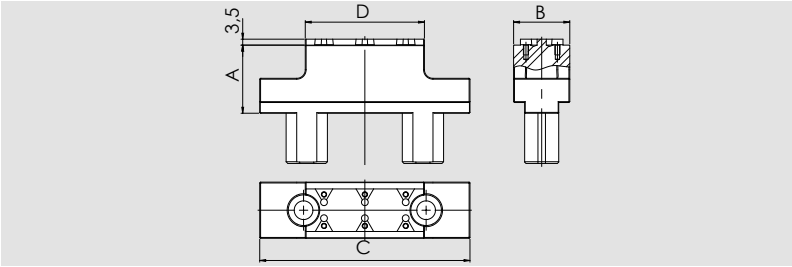

Type	Id. No.	A	B	C	D	n. seats
IMG 88	58341729	35	28	87,5	48	4
IMG 125	58351729	40	33	123,5	70	6
IMG 160	58361729	50	33	158,5	82	10

Pair of reduced jaws - SinterGrip not included, to be specified when ordering

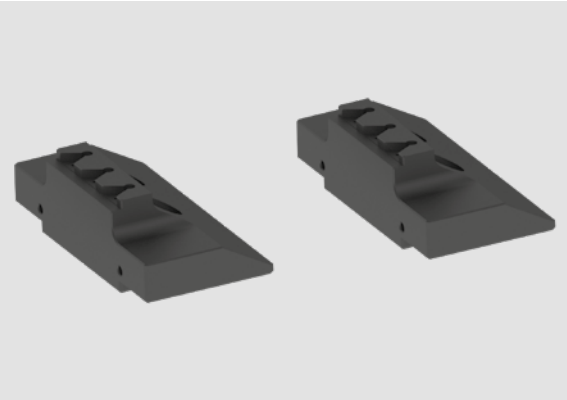

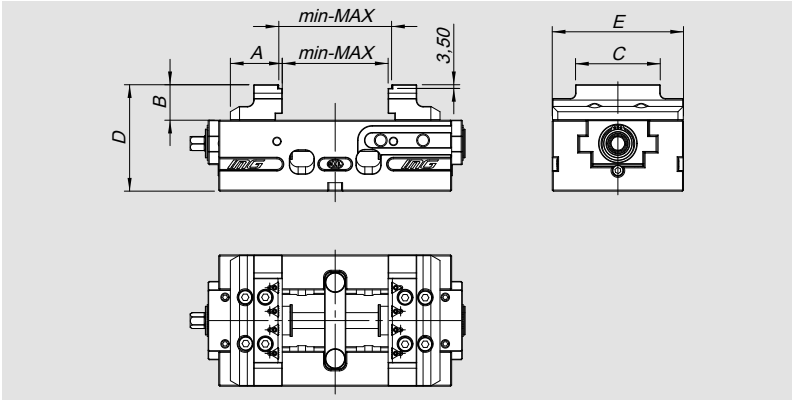

Type	Id. No.	A	B	C	D	E	min.	max.	n. seats
IMG 88-130 / V5 88-130	58341519	35	38,5	48	85,5	87,5	0 - 7	61 - 67	2
IMG 88-230	58341519	35	38,5	48	85,5	87,5	0 - 7	161 - 167	2
IMG 125-180 / V5 125-180	58351519	49	43,5	74	110,5	123,5	0 - 7	97 - 103	4
IMG 125-220	58351519	49	43,5	74	110,5	123,5	0 - 7	99 - 105	4
IMG 125-320	58351519	49	43,5	74	110,5	123,5	0 - 7	159 - 165	4
IMG 160-270	58361519	73	53,5	82	120,5	158,5	0 - 7	129 - 135	5
IMG 160-420	58361519	73	53,5	82	120,5	158,5	0 - 7	209 - 215	5

Pair of smooth jaws

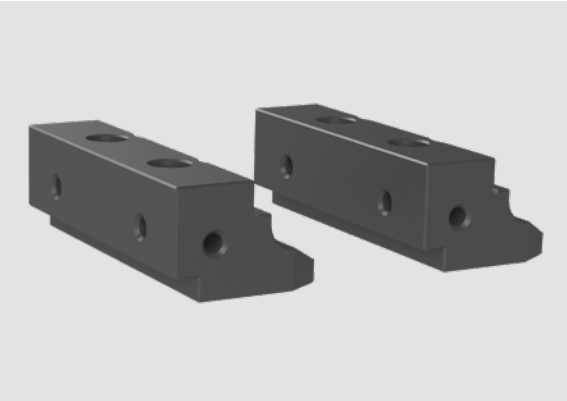

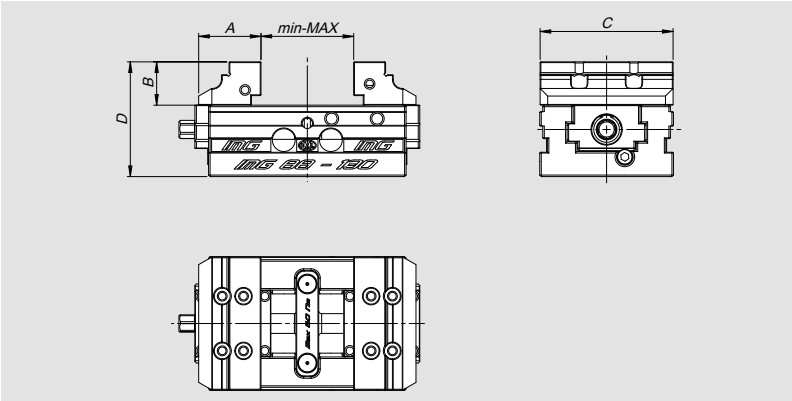

Type	Id. No.	A	B	C	D	min-max
IMG 88 / V5 88	58341819	41	28,5	87,5	74,5	see page 5.1.**11** - 5.1.**13**
IMG 125 / V5 125	58351819	49	33,5	123,5	100,5	see page 5.1.**15** - 5.1.**17** - 5.1.**19**
IMG 160	58361819	73	43,5	158,5	110,5	see page 5.1.**21** - 5.1.**23**

Pair of soft jaws (soft steel – ALU)

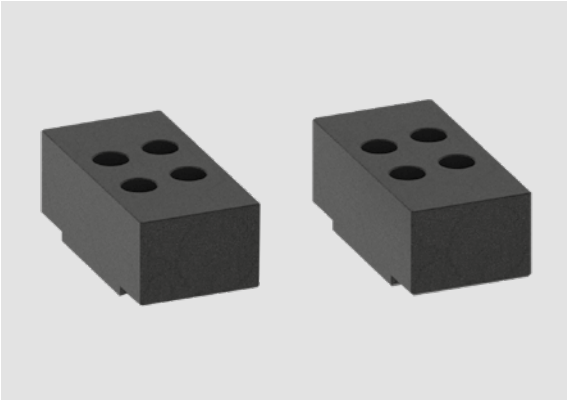

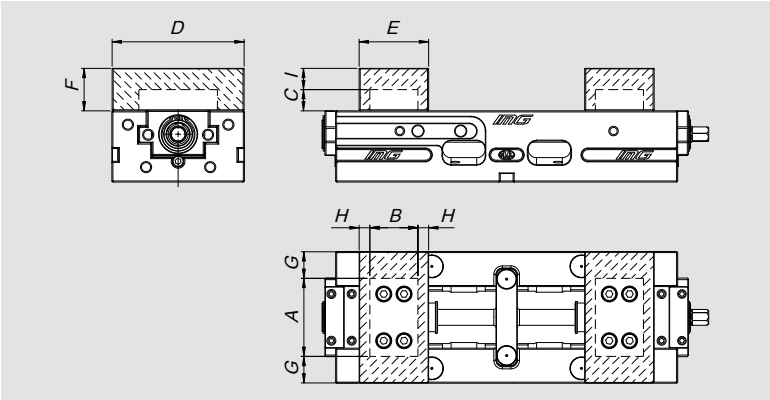

Type		Id. No.	A	B	C	D	E	F	G	H	I
IMG 88 / V5 88	ALU	58341619	57,5	32	17	87,5	45	40	15	6,5	23
IMG 88 / V5 88	Fe	58341629	57,5	32	17	87,5	45	40	15	6,5	23
IMG 125 / V5 125	ALU	58359519	73,5	45	20	123,5	65	40	25	10	20
IMG 125 / V5 125	Fe	58359619	73,5	45	20	123,5	65	40	25	10	20
IMG 160	ALU	58369519	88,5	52	27	158,5	85	50	35	16,5	23
IMG 160	Fe	58369619	88,5	52	27	158,5	85	50	35	16,5	23

Set of soft jaws for double clamping

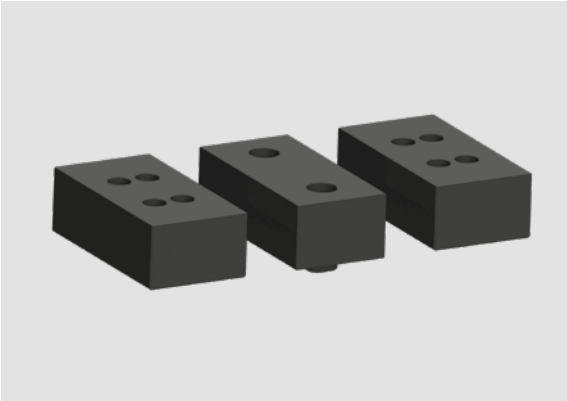

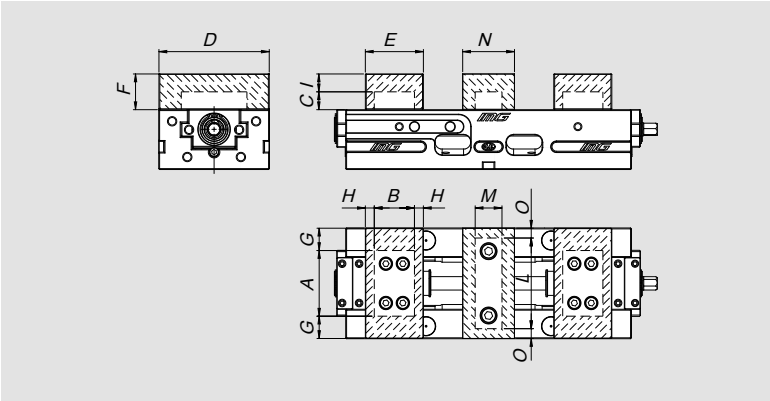

Type		Id. No.	A	B	C	D	E	F	G	H	I	L	M	N	O
IMG 88	ALU	58349519	57,5	32	17	87,5	45	40	15	6,5	23	73,5	23	48	7
IMG 88	Fe	58349619	57,5	32	17	87,5	45	40	15	6,5	23	73,5	23	48	7
IMG 125	ALU	58359519	73,5	45	20	123,5	65	40	25	10	20	101,5	30	58	11
IMG 125	Fe	58359619	73,5	45	20	123,5	65	40	25	10	20	101,5	30	58	11
IMG 160	ALU	58369519	88,5	52	27	158,5	85	50	35	16,5	23	120,5	30	60	19
IMG 160	Fe	58369619	88,5	52	27	158,5	85	50	35	16,5	23	120,5	30	60	19

Application example

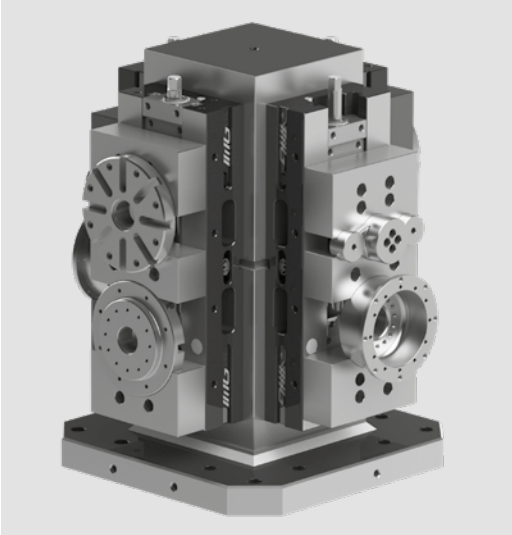

OP10 - OP20 Kit double clamping

- One pair OP20 parallel H included
- SinterGrip not included, to be specified when ordering

Type	Id. No.	Parallels H
IMG 88	58349719	20
IMG 125	58359719	25
IMG 160	58369719	35

Application example

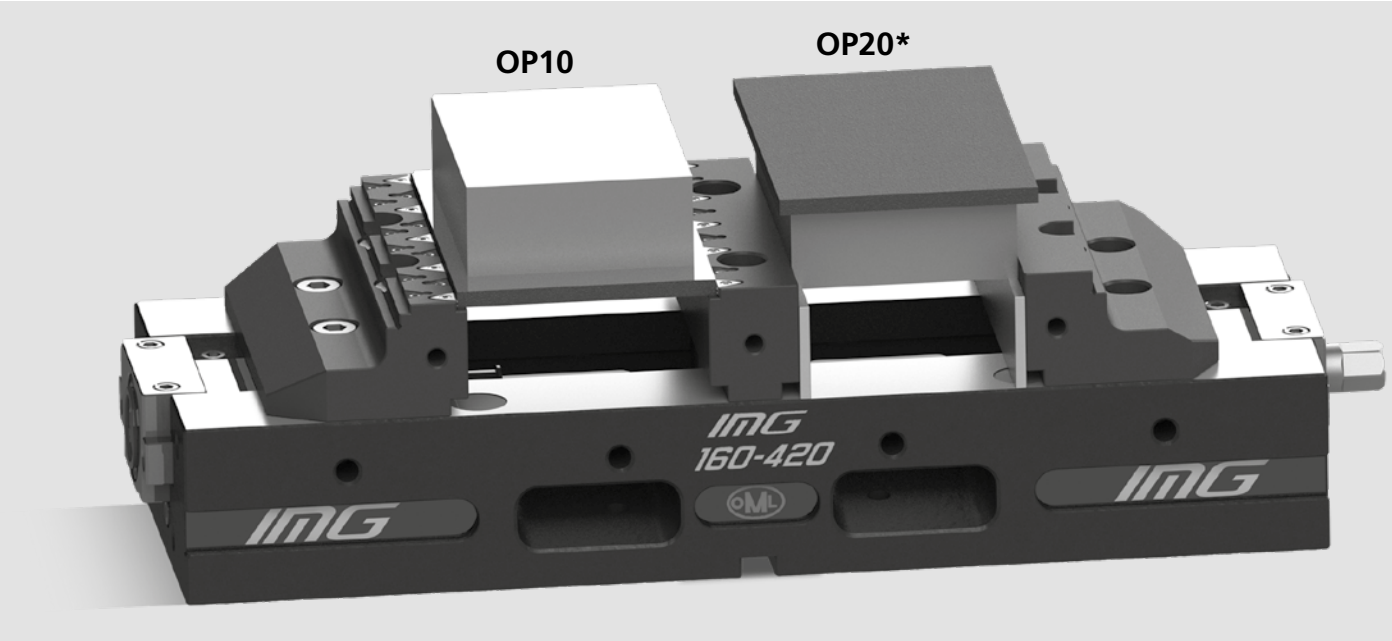

*** OP20** with smooth jaws and parallels CLAK System.

Pair of supports with pull down jaws

Type	Id. No.	Weight (Kg)
IMG 125	58351419	4,100
IMG 160	58361419	8,300

Pair of grooved jaws

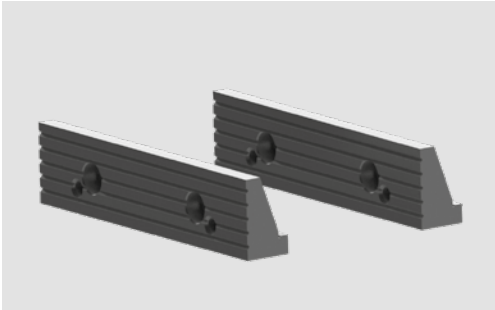

Type	Id. No.	Weight (Kg)
IMG 125	58351425	0,600
IMG 160	58361425	1,400

Pair of smooth jaws

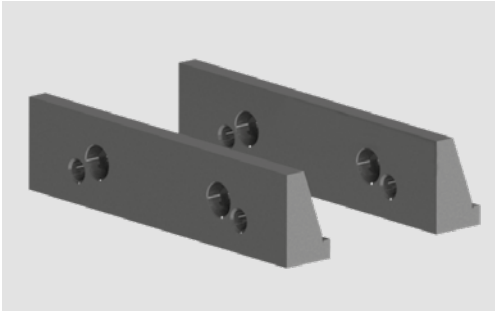

Type	Id. No.	Weight (Kg)
IMG 125	58351415	0,600
IMG 160	58361415	1,450

Application example

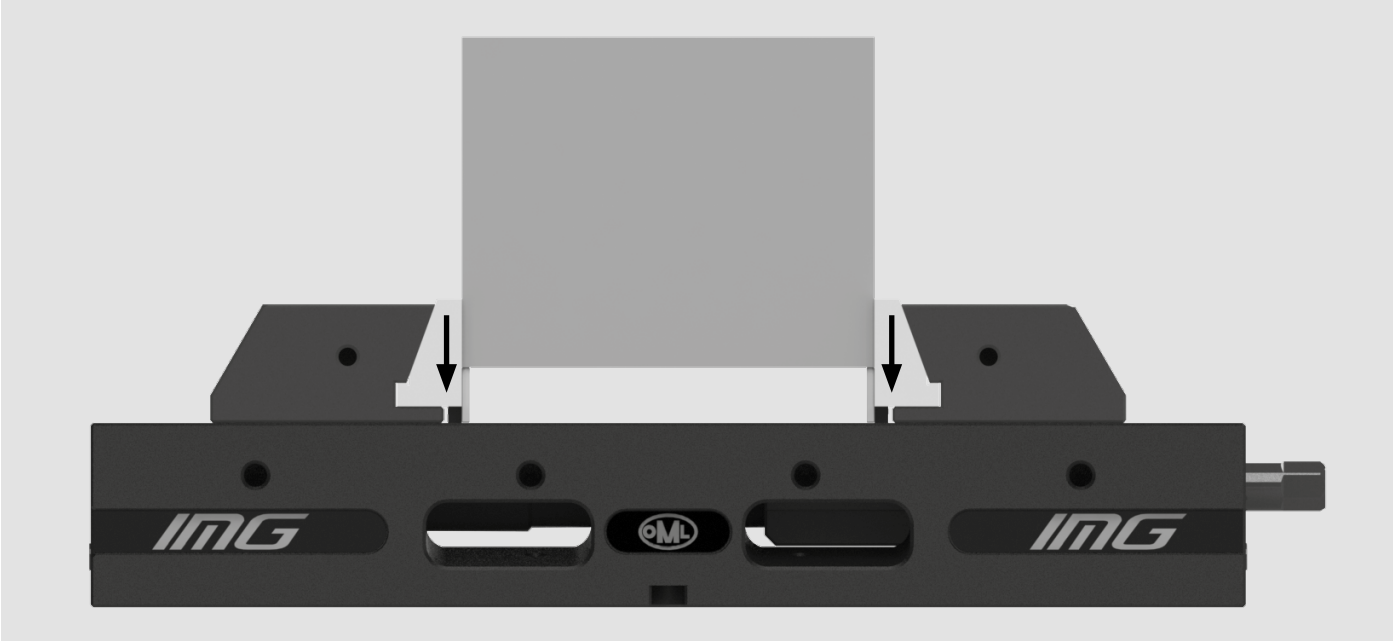

Floating jaw gripper

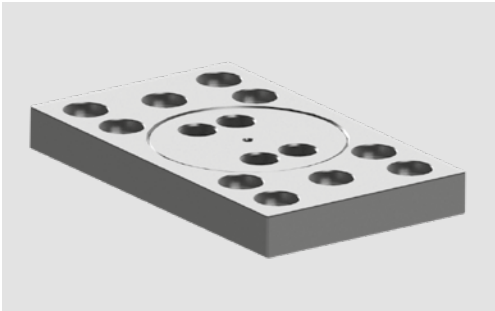

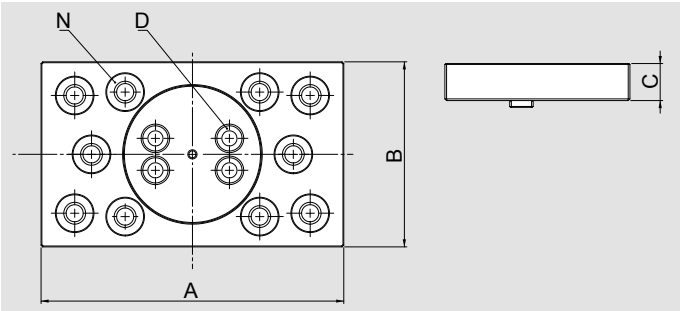

Type	Id. No.	A (mm)	B (mm)	D (mm)	N	C (mm)	Weight (Kg)
IMG 125	58352520	180	110	M8	10	22	3,100
IMG 160	58362520	200	120	M10	10	22	2,700

Fixed/movable jaw gripper

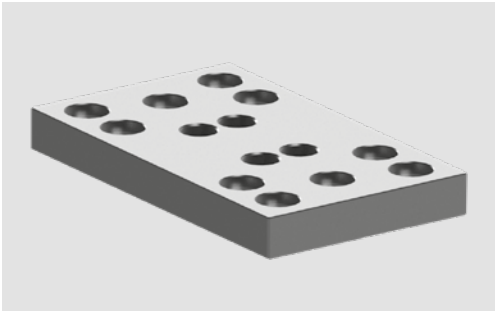

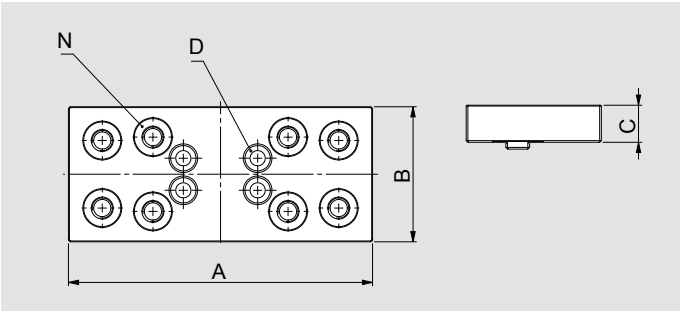

Type	Id. No.	A (mm)	B (mm)	D (mm)	N	C (mm)	Weight (Kg)
IMG 125	58352510	180	80	M10	8	22	2,300
IMG 160	58362510	200	120	M10	8	22	3,700

Fixed jaw for double clamping gripper

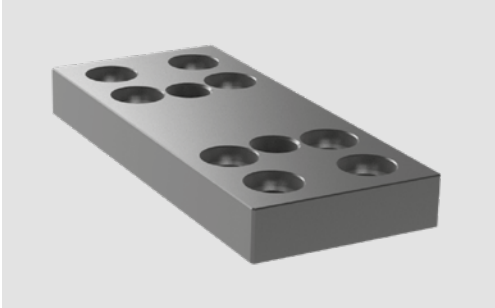

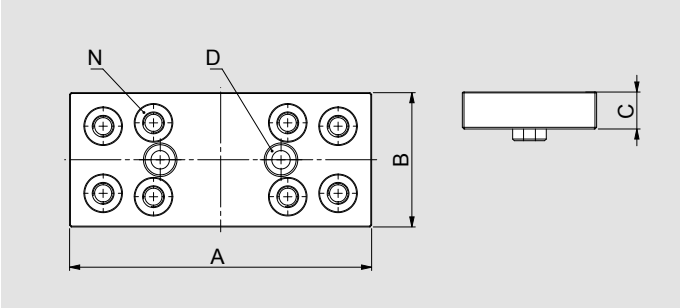

Type	Id. No.	A (mm)	B (mm)	D (mm)	N	C (mm)	Weight (Kg)
IMG 125	58352530	180	80	M8	8	22	2,300
IMG 160	58362530	200	90	M10	10	22	2,900

Application example

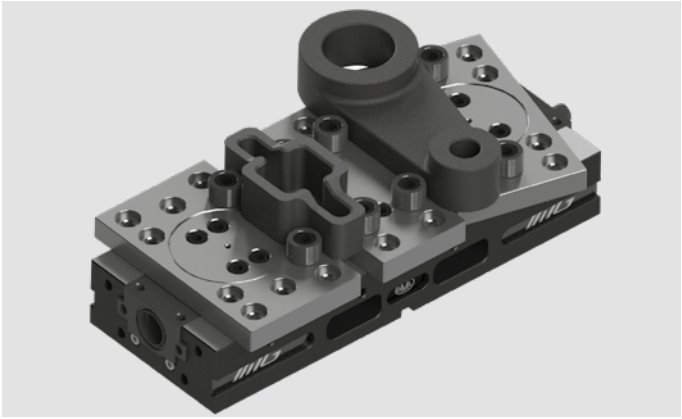

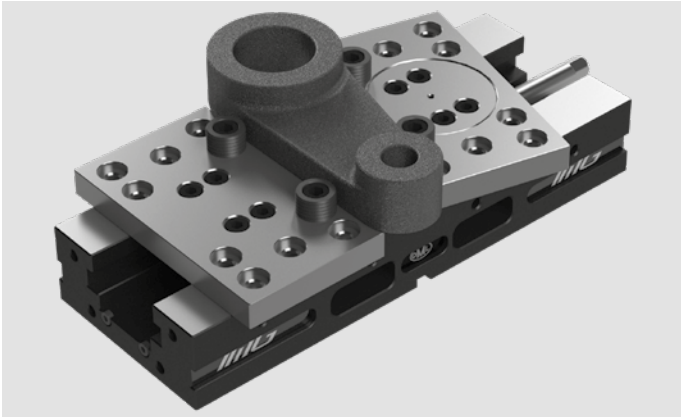

Floating jaws dimensions

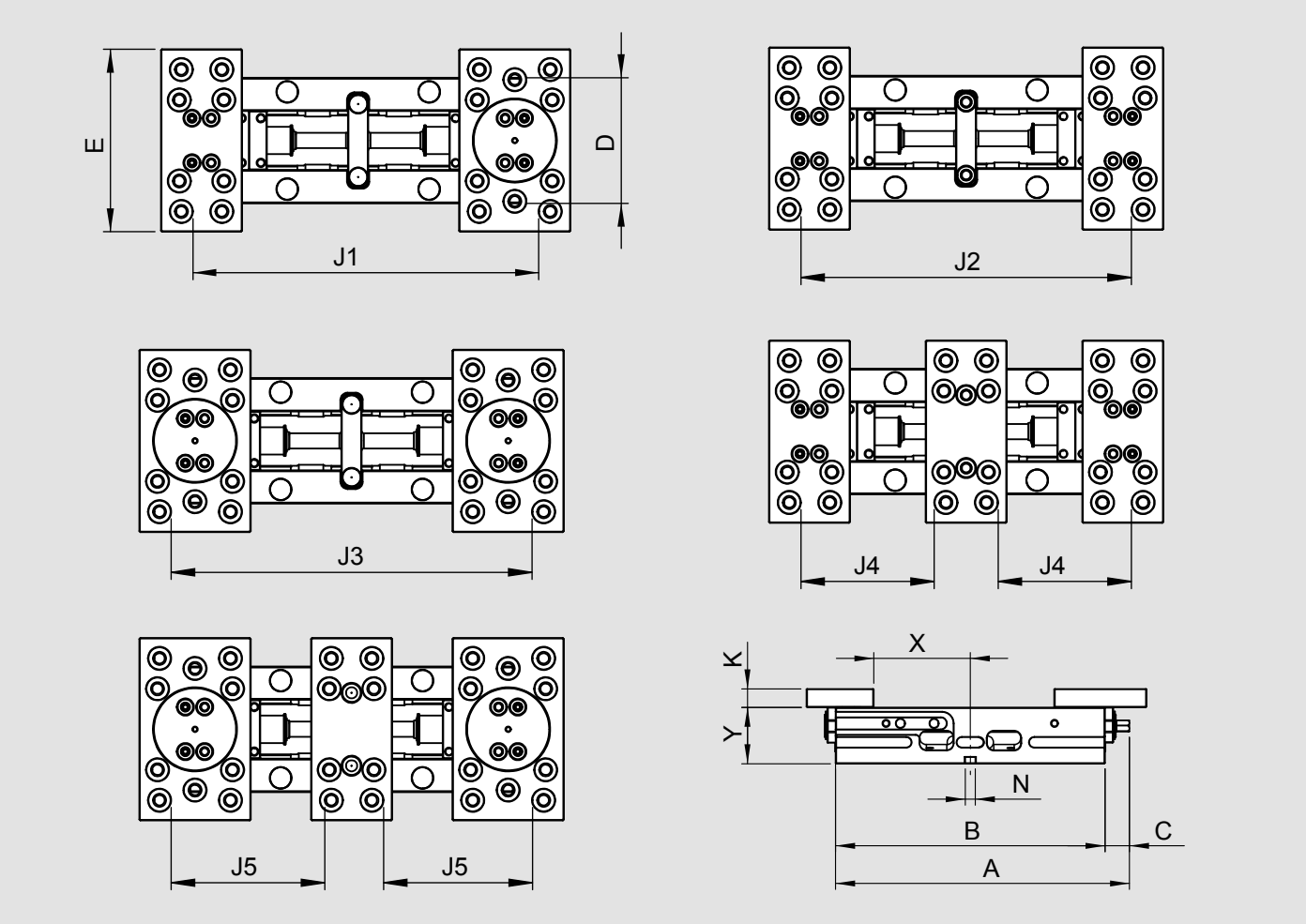

Type	A	B	C	D	E	K	N	X	Y	J1	J2	J3	J4	J5
IMG 125-220	247	220	27	124	180	22	12	54	67	215	200	230	65,5	X
IMG 125-320	349	320	29	124	180	22	12	115	67	335	349	350	125,5	140,5
IMG 160-270	299	270	29	159	200	22	12	59,5	67	290	290	290	105,5	105,5
IMG 160-420	449	420	29	160	200	22	12	150	67	448	448	448	184,5	184,5

Pull down jaws dimensions

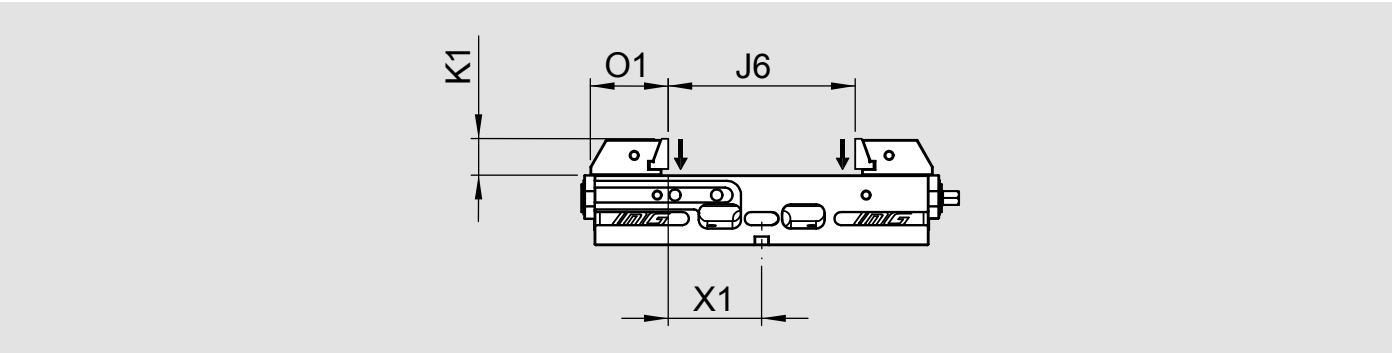

Type	K1	O1	X1	J6
IMG 125-180	35	74,4	57.5	115
IMG 125-220	35	74,4	59,5	119
IMG 125-320	35	74,4	119,5	239
IMG 160-270	45	91,5	76	152
IMG 160-420	45	91,5	155	310

Maximum diameters of floating jaws

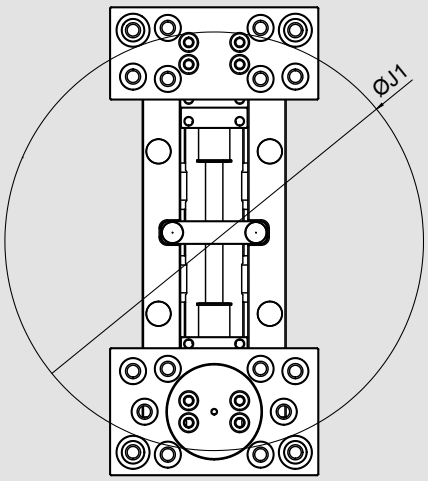

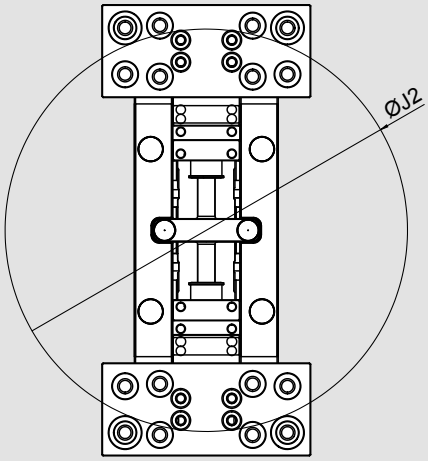

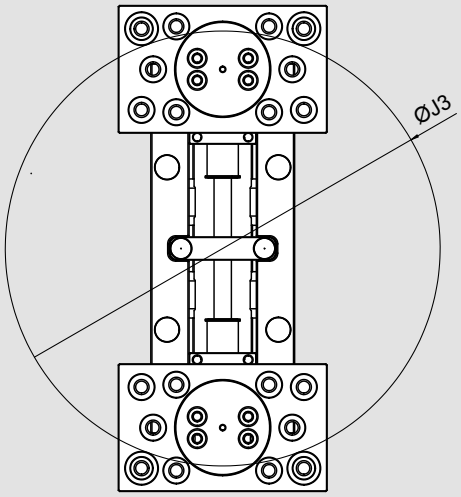

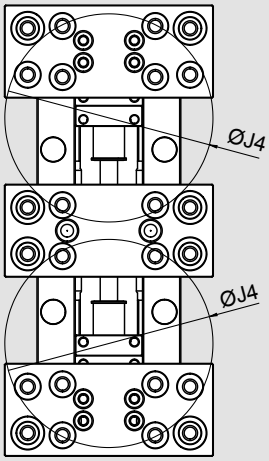

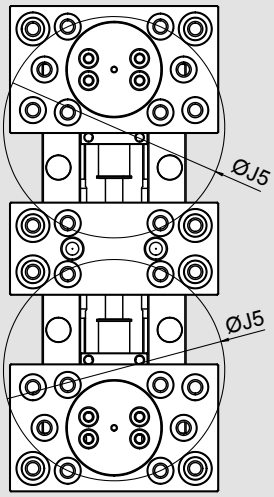

Type	Ø J1	Ø J2	Ø J3	Ø J4	Ø J5
IMG 125-220	252	239	265	122	X
IMG 125-320	360	347	375	179	190
IMG 160-270	327	327	327	180	180
IMG 160-420	441	441	441	224	224

Set of 4 grippers h11 smooth

Id. No.
58906114

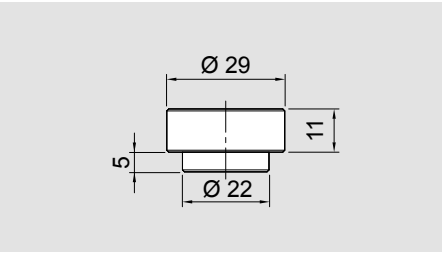

Set of 4 grippers h11 serrated

Id. No.
58906124

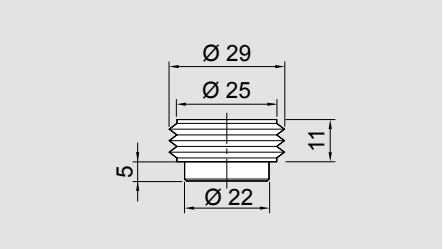

Set of 4 grippers h19 smooth

Id. No.
58906214

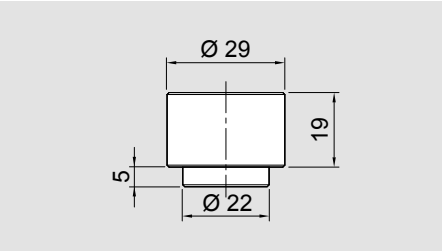

Set of 4 grippers h19 serrated

Id. No.
58906224

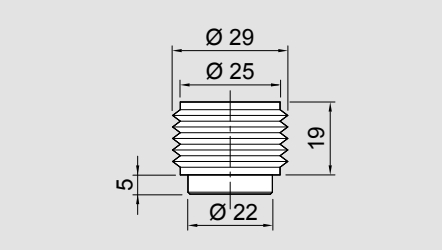

Set of 4 grippers h24 smooth

Id. No.
58906314

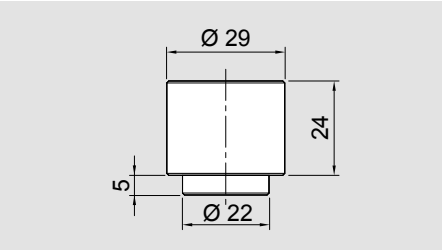

Set of 4 grippers h24 serrated

Id. No.
58906324

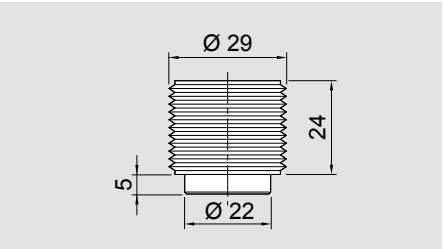

Applications / Customer Benefits

- Ideal for 5 axis machines
- Compact design
- Possibility to be mounted directly on machine tools with T slots
- Possibility to be mounted directly on single plate or DUO APS (pitch 200)

Technical features

- Material: steel

Standard equipment

On request: Positioning keys for IMG / APS pins / Positioning keys for machine tool

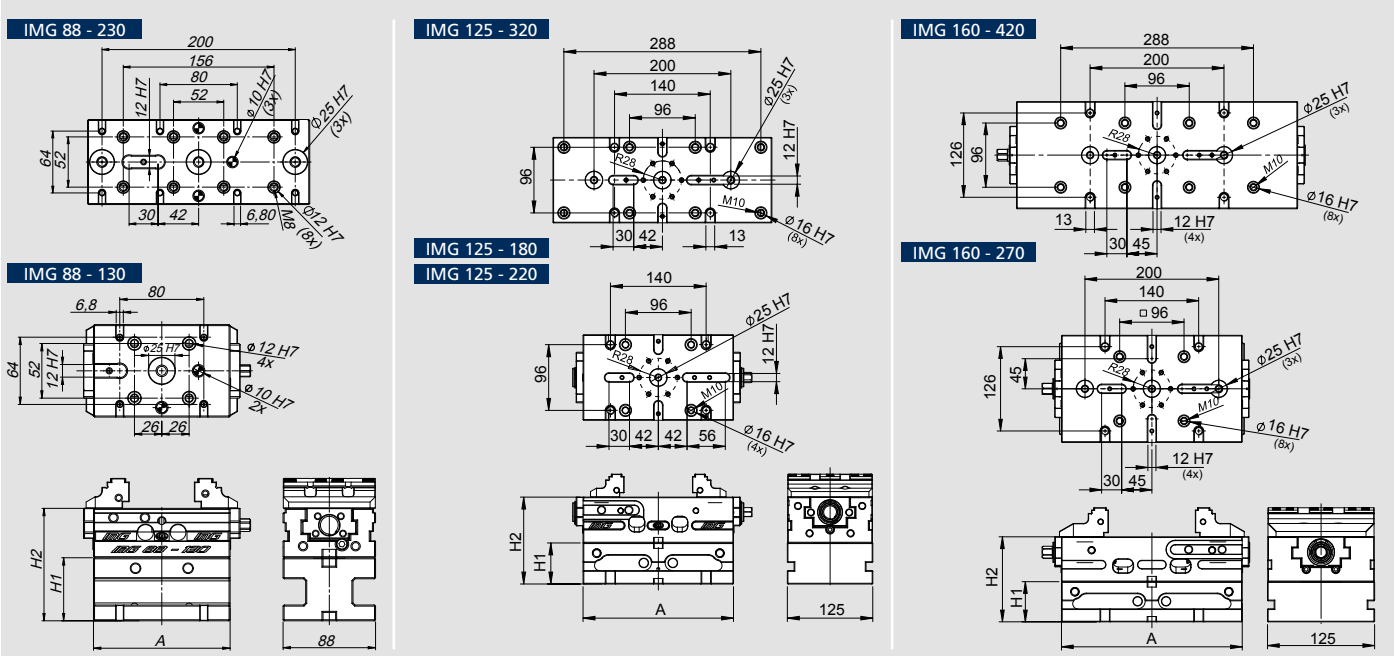

Type	Id. No.	H1	H2	A	Weight
For IMG 88 - 130	58342018	60	107	130	4 Kg
For IMG 88 - 130	58342028	100	207	130	6 Kg
For IMG 88 - 130	58342019	60	107	230	5 Kg
For IMG 88 - 230	58342029	100	207	230	7 Kg
For IMG 125 - 180	58352017	60	124	180	8 Kg
For IMG 125 - 180	58352027	100	147	180	12 Kg
For IMG 125 - 220	58352018	60	127	220	10 Kg
For IMG 125 - 220	58352028	100	167	220	15 Kg
For IMG 125 - 320	58352019	60	127	320	15 Kg
For IMG 125 - 320	58352029	100	167	320	21 Kg
For IMG 160 - 270	58362018	60	127	270	17 Kg
For IMG 160 - 270	58362028	100	167	270	25 Kg
For IMG 160 - 420	58362019	60	127	420	26 Kg
For IMG 160 - 420	58362029	100	167	420	38 Kg

Application example

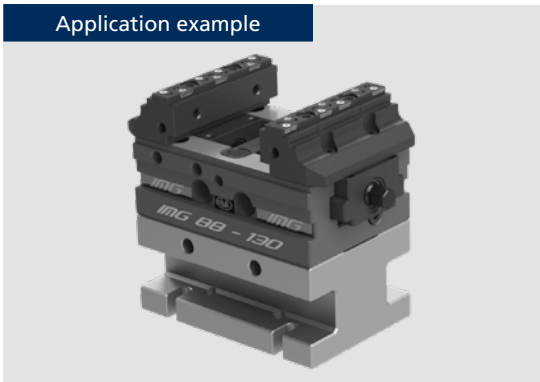

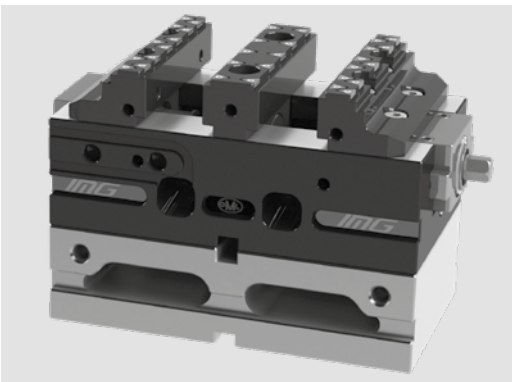

Working examples

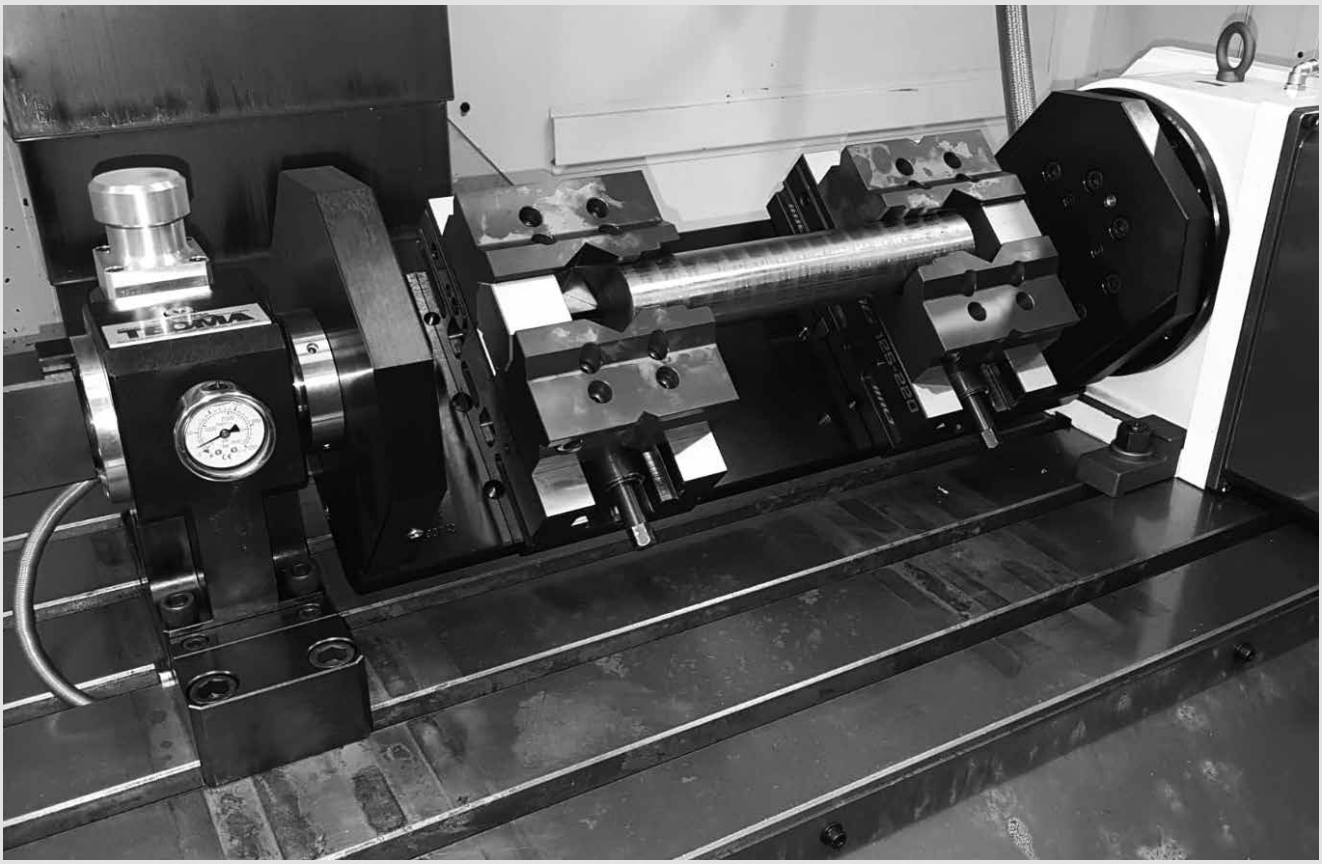

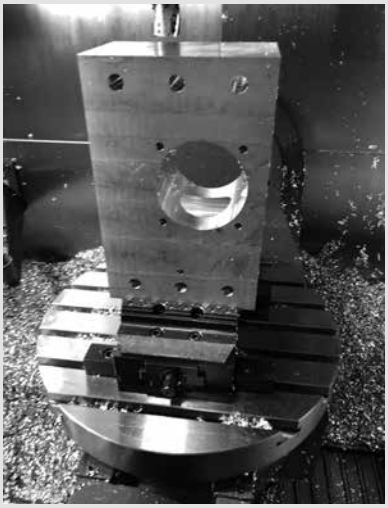

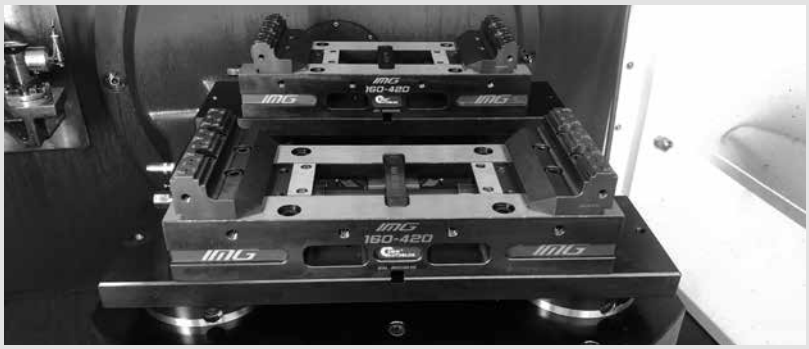

Alu pyramid for IMG 120-220

Applications / Customer Benefits

- Ideal for 5 axis machines
- Compact design
- Possibility to be mounted directly on machine tools with radial slots at 45 / 60 degrees
- Possibility to be mounted directly on APS Zero Point system and Plus5

Technical features

- Material: ALU

Standard equipment

Positioning keys and screws for IMG, V5 and E5 vises
Pins and screws

IMG 88 - 130
V5 88 - 130
E5 88 - 130
PLUS 5 - 52

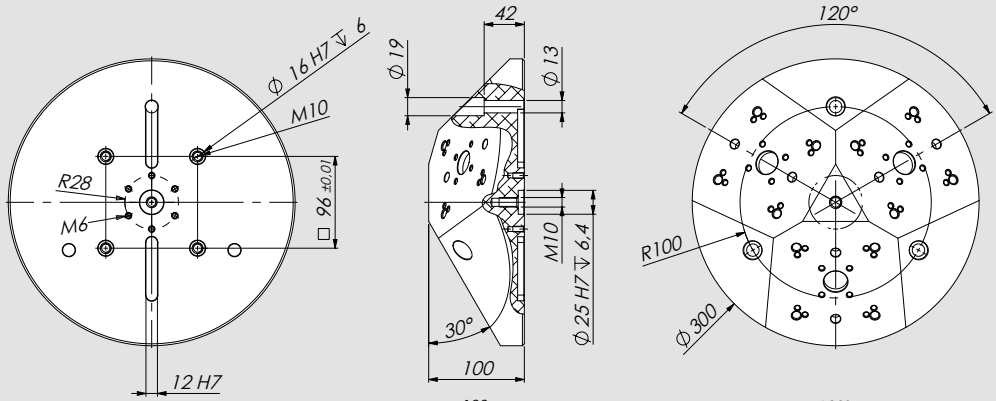

IMG 125 - 180
IMG 125 - 220
V5 125 - 180
E5 125 - 180
PLUS 5 - 96

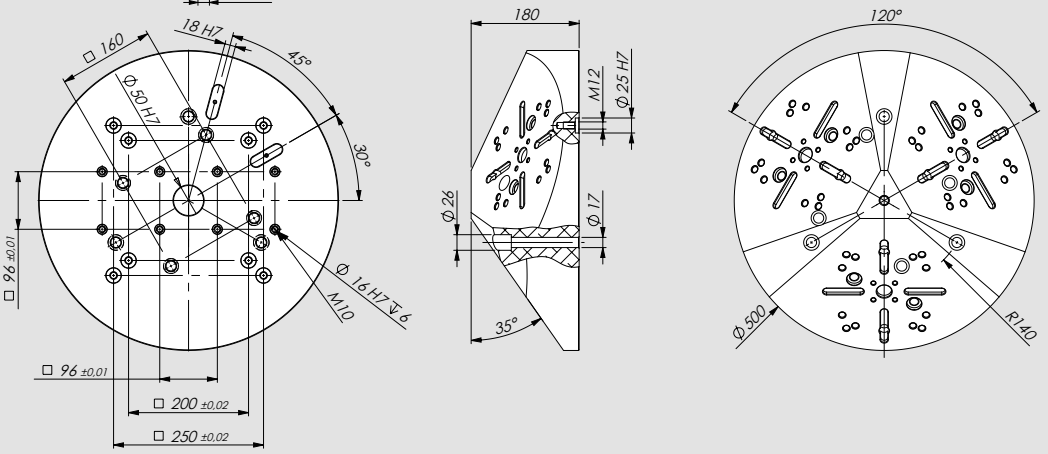

Type	Id. No.	Weight (Kg)
For IMG, V5, E5 88-130 and PLUS 5 - 52	58343210	12
For IMG 125-180, IMG 125-220, V5, E5 125-180 and PLUS 5 - 96	58353210	55

Application example

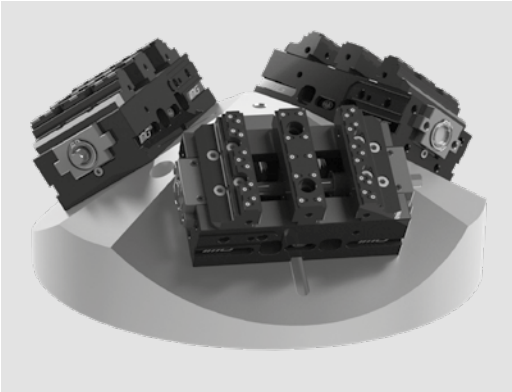

Triangular tombstone for IMG 125-320

Applications / Customer Benefits

- Ideal for 5 axis machines
- Ideal for horizonal machines
- Compact design
- Wide clamping range

Technical features

- Material: steel

Standard equipment

Steel tombstone

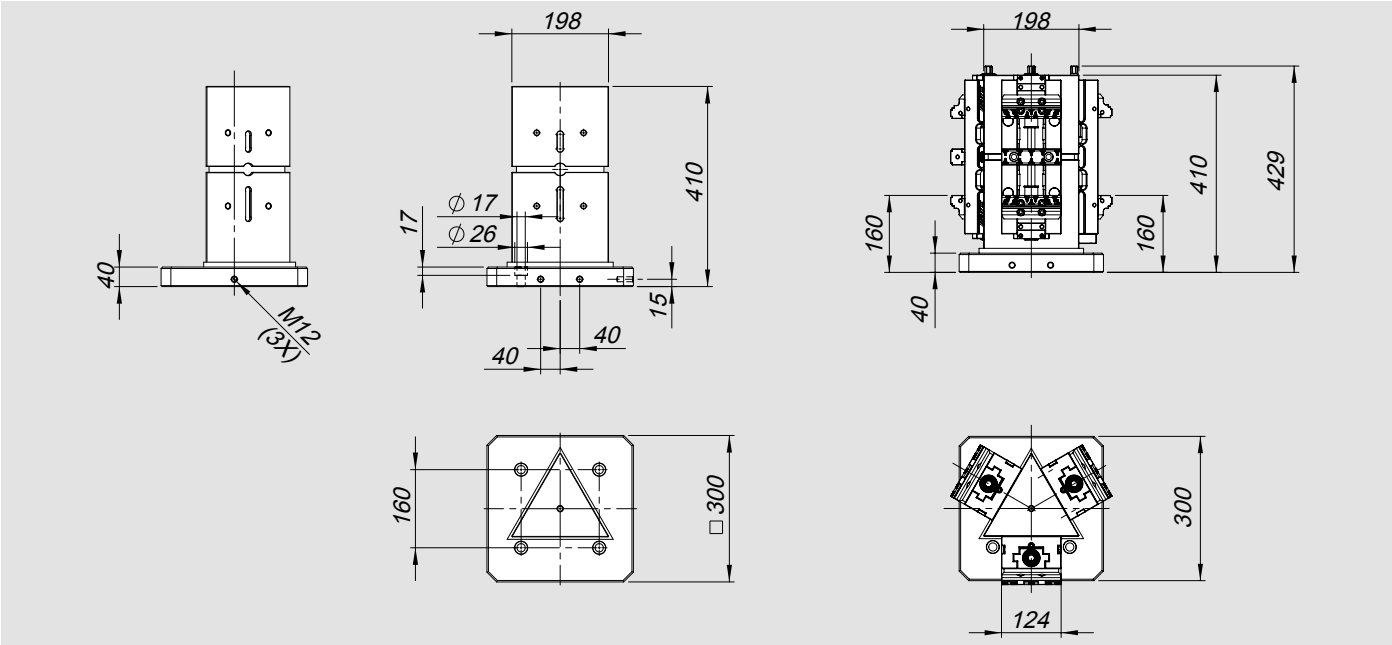

Type	Id. No.	Weight
Triangular tombstone for IMG 125-320	58353010	74 Kg

Application example

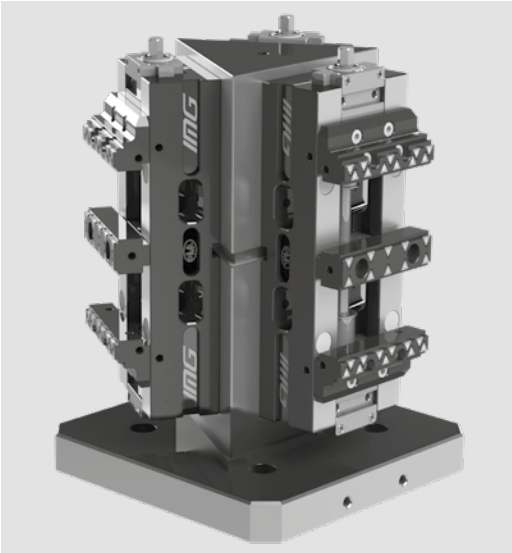

Applications / Customer Benefits

- Ideal for horizonal machines
- Compact design
- Wide clamping range

Technical features

- Material: steel

Standard equipment

Steel tombstone

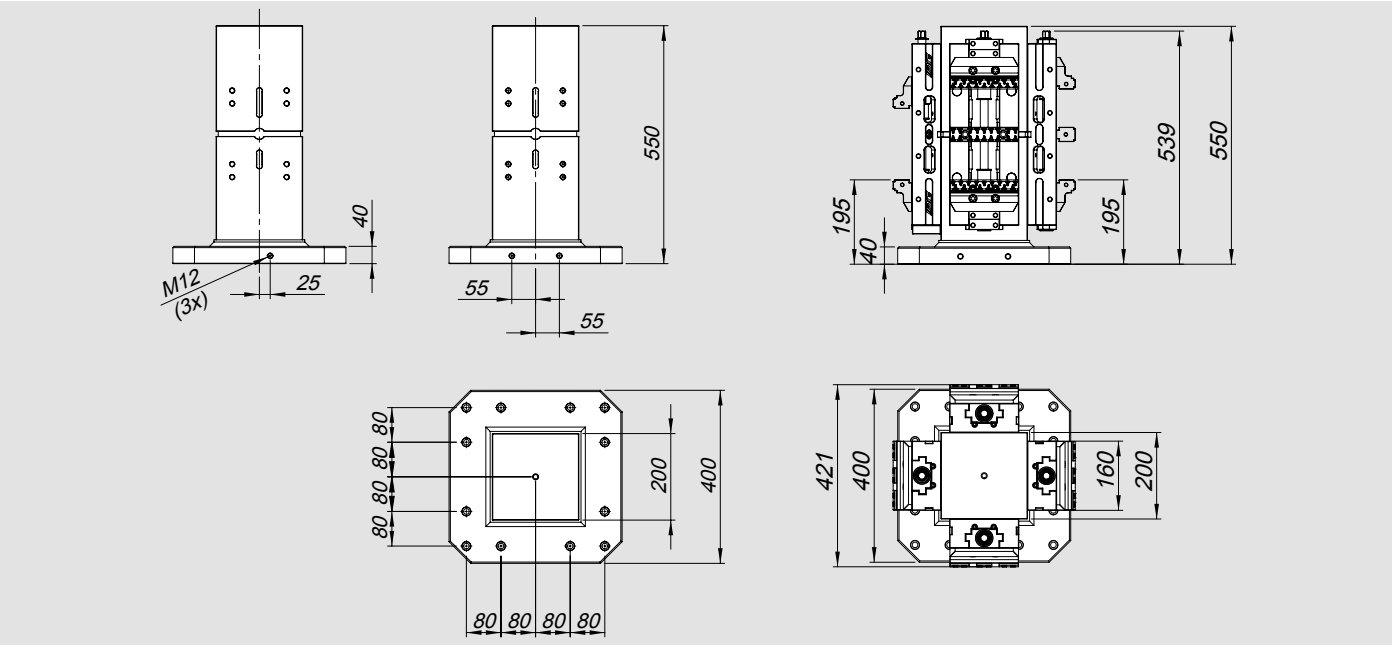

Type	Id. No.	Weight
Tombstone for IMG 160-420	58363120	140 Kg

Application example

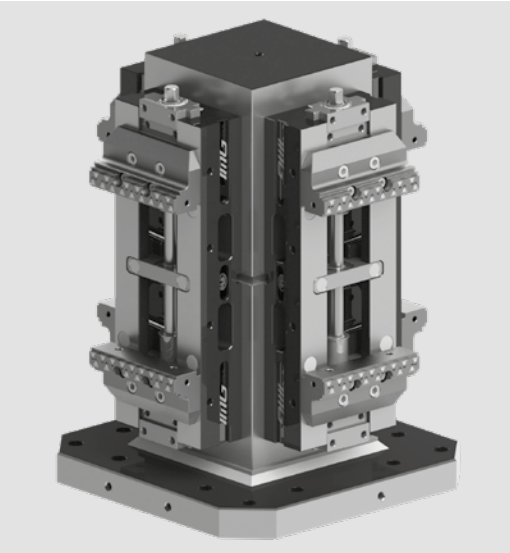

Clamping pins APS 140

Tipo A
centering pin

Tipo B
reference pin

Application/customer benefits
- Fixation and positioning on the clamping systems APS 140
- Wear-resistant due to an extra hard protective coating
- Large entry radii of the clamping pins for easy and safe loading

Technical features
- Centering pin Type A (Standard)
- Sword pin Type B (Positioning pin)

Standard equipment
Clamping pin with mounting screw M10x45

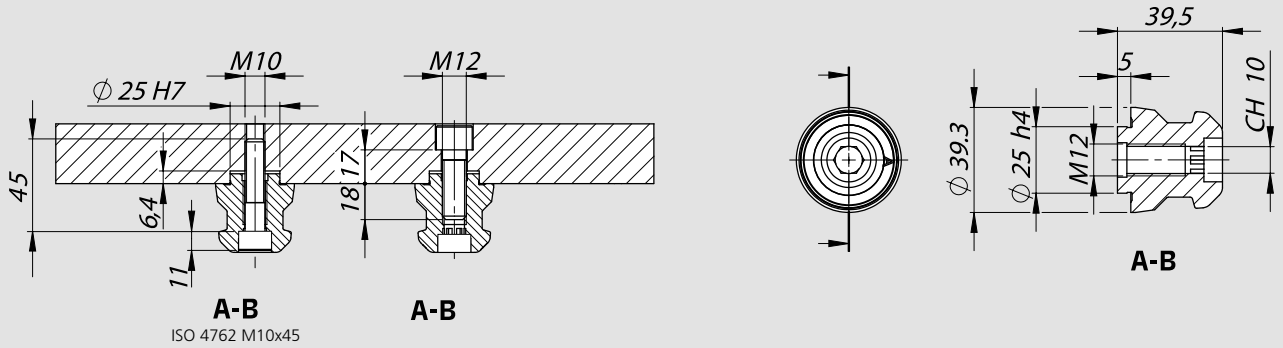

	Thread	Type A	Type B	Weight
Clamping pins APS 140	M12	46162355	46162356	0.3 Kg

Clamping pins APS 190

Application/customer benefits
- Fixation and positioning on the clamping systems APS 190
- Large entry radii of the clamping pins for easy and safe loading

Technical features
- Centering pin Type A (Standard)

Standard equipment
Clamping pin with mounting screw M8x40 (6 pieces)

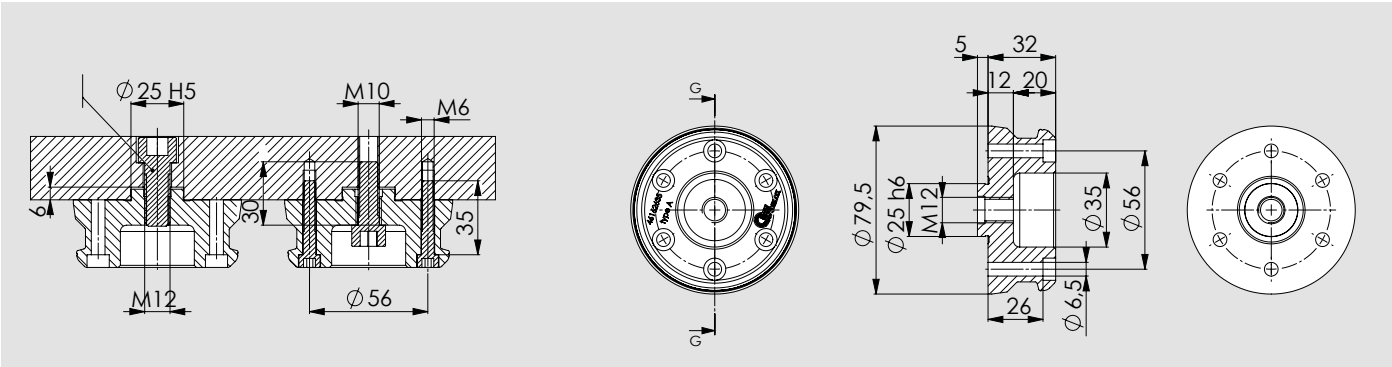

Id. No.	Type		Weight
46 16 26 35	A	Ø 25 = at pin APS-140 M12	0,85Kg

Application examples

IMG 125

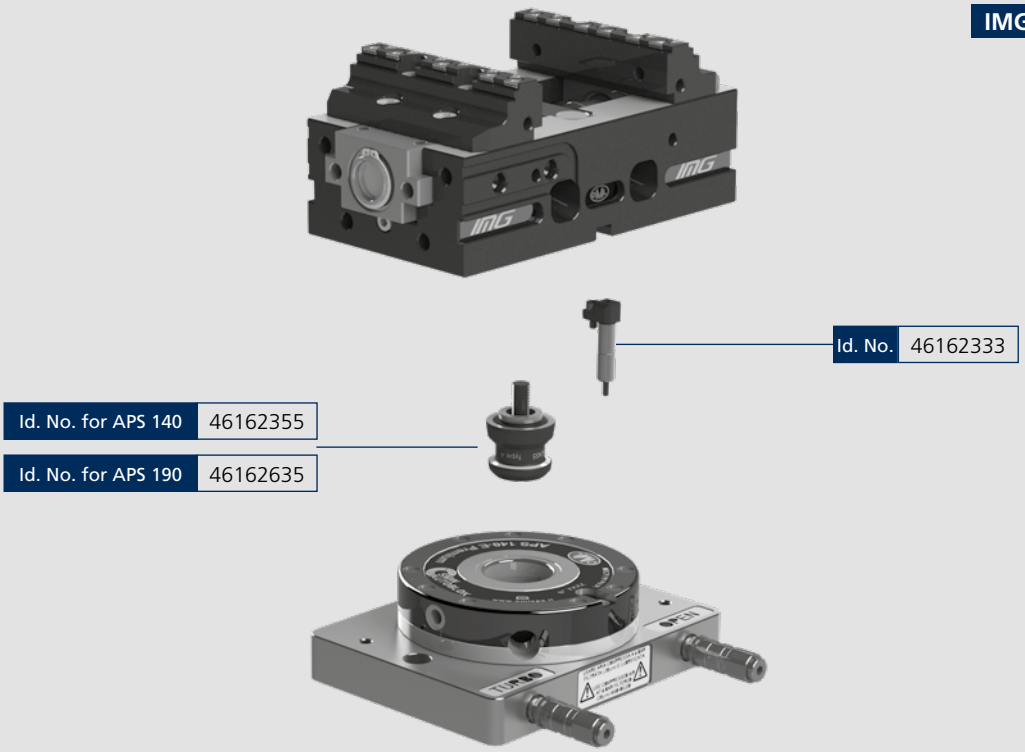

IMG 160

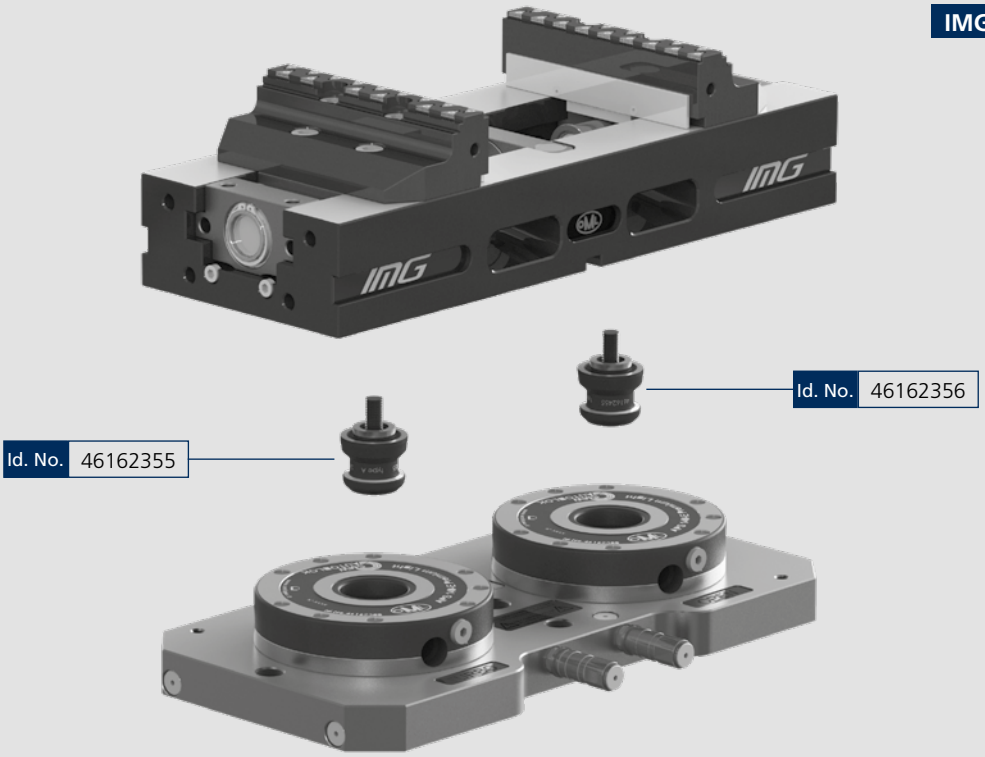

Quick change modular parallels

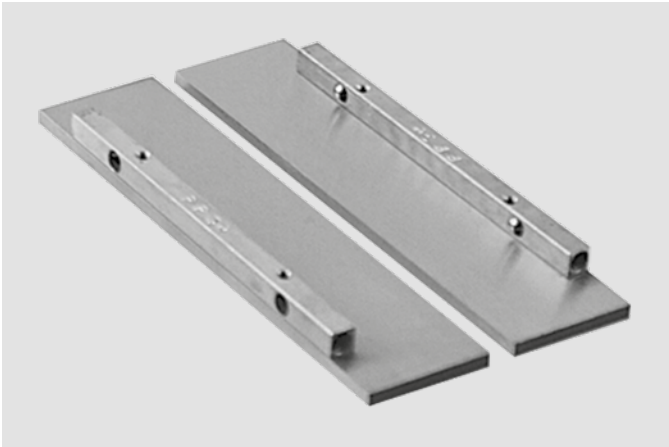

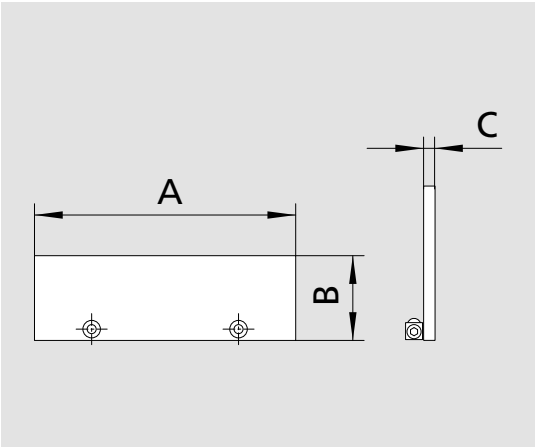

Type	Id. No.	B	A	C
For IMG 88	58343510	10	87	4
For IMG 88	58343515	15	87	4
For IMG 88	58343520	20	87	4
For IMG 88	58343525	25	87	4

Type	Id. No.	B	A	C
For IMG 125	58455115	15	124	4
For IMG 125	58455120	20	124	4
For IMG 125	58455125	25	124	4
For IMG 125	58455130	30	124	4
For IMG 160	58455315	15	159	4
For IMG 160	58455325	25	159	4
For IMG 160	58455335	35	159	4
For IMG 160	58455340	40	159	4

Application example

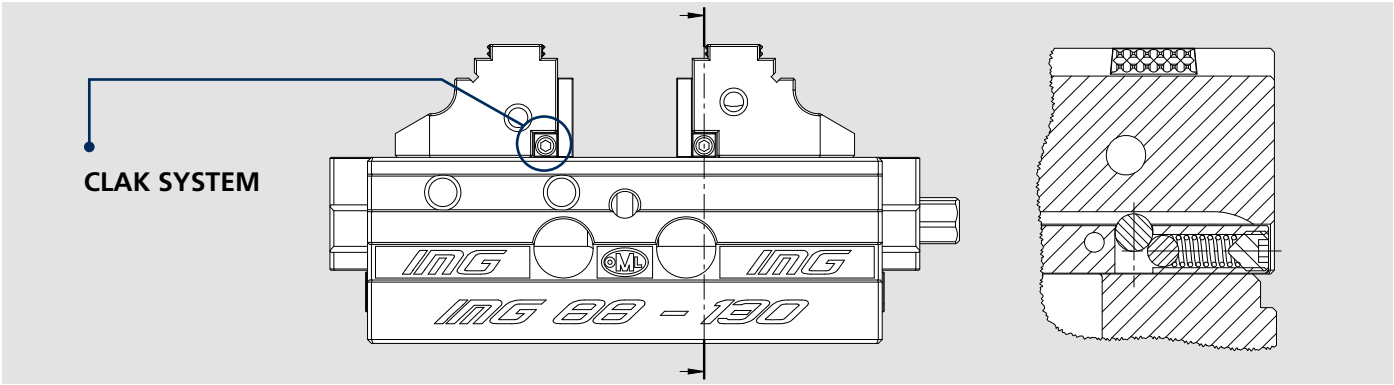

Torque Wrench

Type	Id. No.
IMG 88	51501026
IMG 125	51501021
IMG 160	51501022

Workstop

Type	Id. No.
IMG 88	58415030
IMG 125-160	58315020

Key for APS for single use (APS side)

Type	Id. No.
APS 140 / 190	46162333

Pair of positioning keys for T Slot

IMG 125 - 160	mm 12 - h6
mm 12 - h6	58351392
mm 14 - h6	58351393
mm 16 - h6	58351394
mm 18 - h6	58351395
mm 20 - h6	58351396
mm 22 - h6	58351397

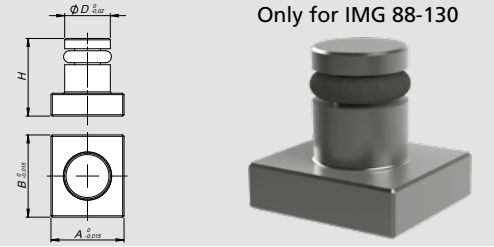

IMG 88 - 130	A	B	H	D
58341393	12	14	17	10
58341395	16	18	17	10

Key for single use on APS 140 for IMG 88-125 (vice body side)

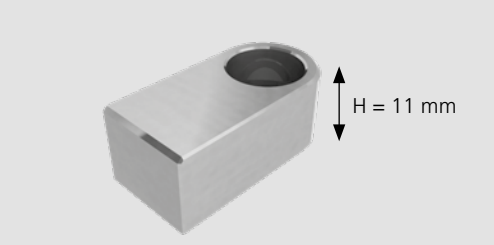

Type	Id. No.
IMG 88	58351312
IMG 125	

Key for single use on APS 190 for IMG 160 (vice body side)

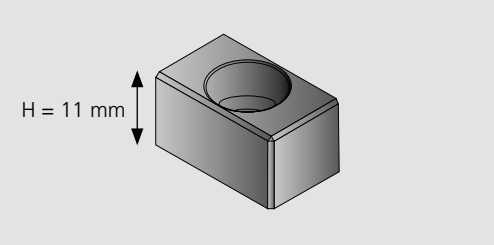

Type	Id. No.
IMG 160	58361312

Pair of Clamps

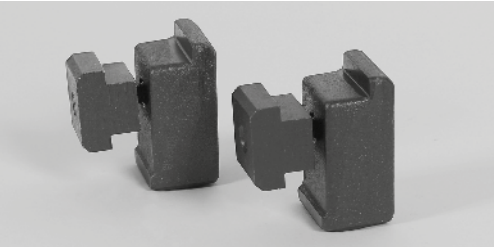

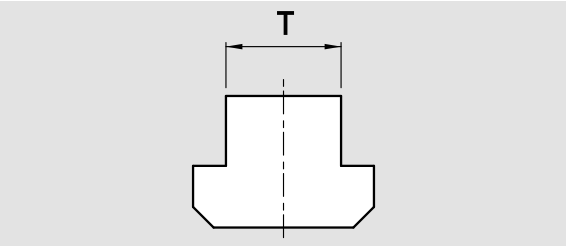

Type	mm 12	mm 14	mm 16	mm 18	mm 20	mm 22
IMG 88	58012792	58012793	58012794	58012795	58012796	58012797
IMG 125 / 160	58022792	58022793	58022794	58022795	58022796	58022797

SinterGrip

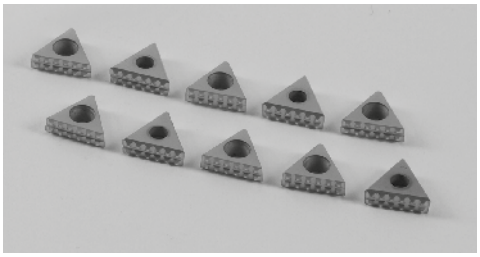
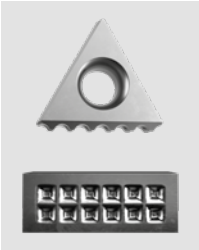

Id. No.	Description
58450119	Set of 10 SinterGrip inserts **STD** for steel

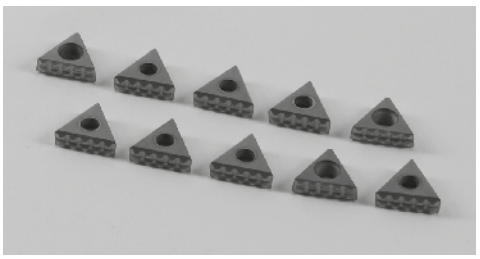
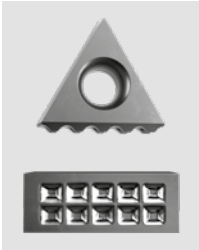

Id. No.	Description
58450129	Set of 10 SinterGrip inserts **HRC** for hardened steel / titanium until 50-54 HRC

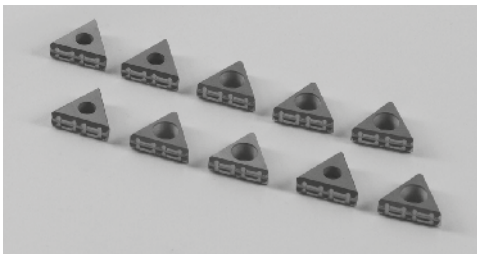
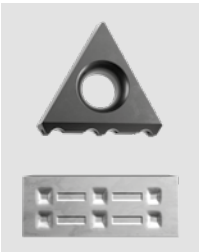

Id. No.	Description
58450139	Set of 10 SinterGrip inserts for **ALU**

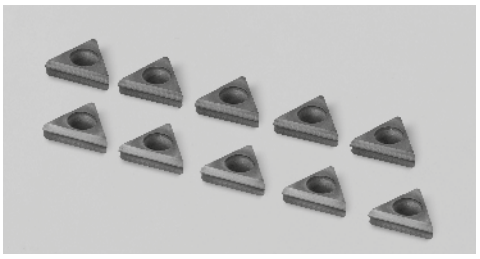
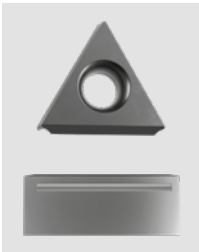

Id. No.	Description
58450149	Set of 10 SinterGrip inserts **PLM** for ultra-High molecular weight polyethylene (UHMWPE)

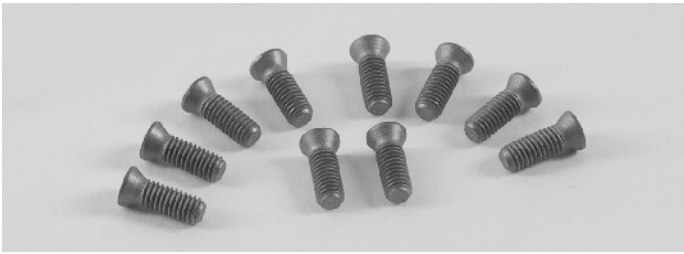

Id. No.	Description
58450219	Set 10VTX30 for inserts SINTERGRIP

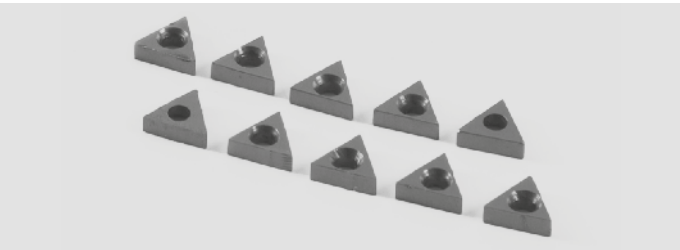

Id. No.	Description
58450519	Set 10 protection inserts in aluminum

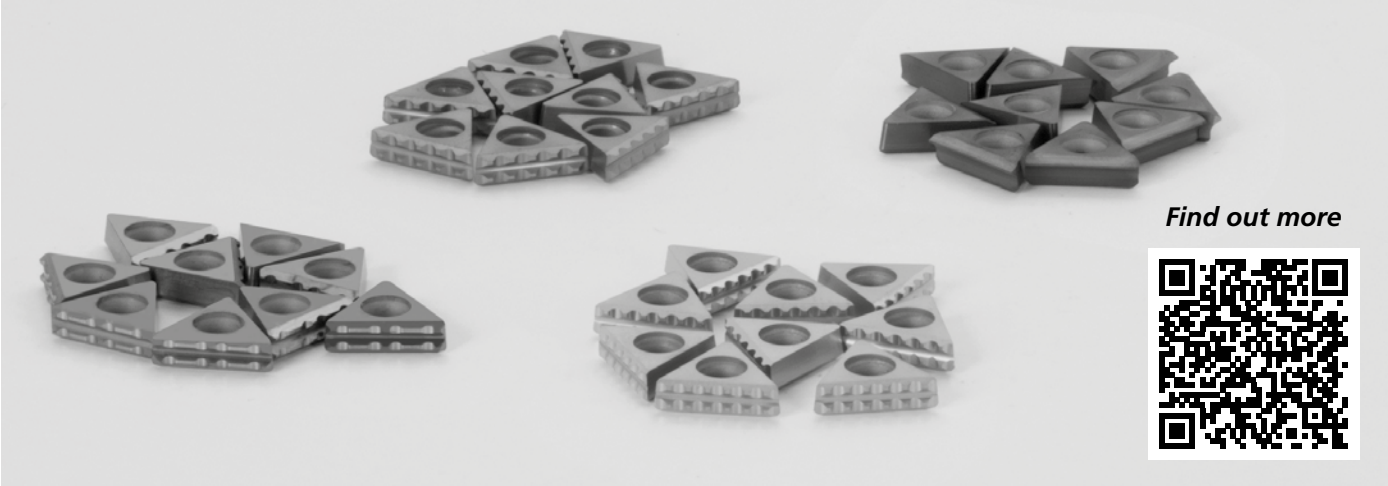

Pair of SINTERGRIP jaws

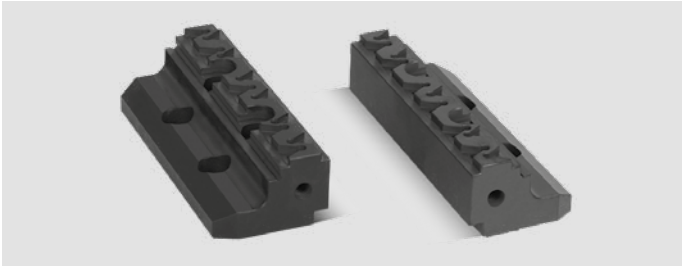

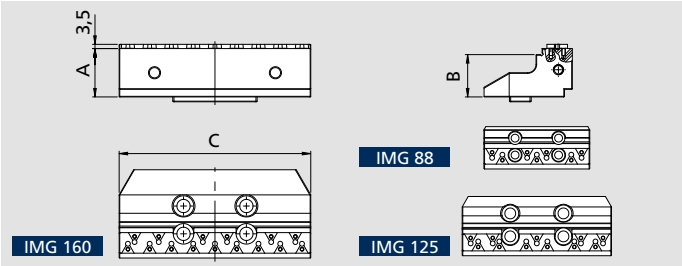

Type	Id. No.	A	B	C	n. seats
IMG / V5 88 SinterGrip	58341219	25	20	87,5	7
IMG / V5 88 SinterGrip H1	58341229	15	10	87,5	7
IMG / V5 125 SinterGrip	58351219	30	25	123,5	11
IMG / V5 125 SinterGrip H1	58351229	19	14	123,5	11
IMG 160 SinterGrip	58361219	40	35	158,5	15

Pair of BASIC jaws (for materials up to 30 HRC)

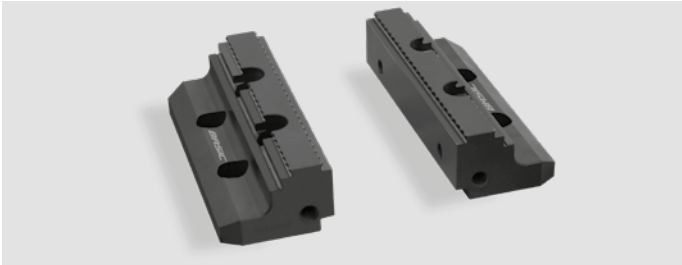

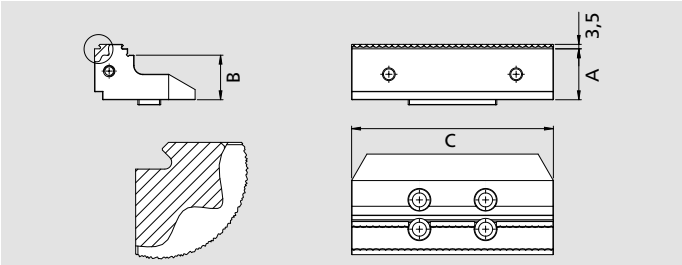

Type	Id. No.	A	B	C
IMG / V5 88 Basic	58341259	25	20	87,5
IMG / V5 88 Basic H1	58341269	15	10	87,5
IMG / V5 125 Basic	58351259	30	25	123,5
IMG / V5 125 Basic H1	58351269	19	14	123,5
IMG 160 Basic	58361259	40	35	158,5

Wrench

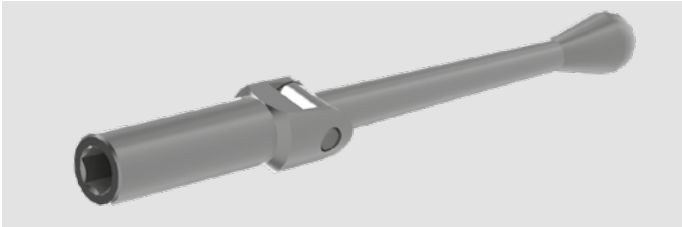

Type	Id. No.
IMG 125 / V5	58351910
IMG 160	58361910

Wrench

Type	Id. No.
IMG 88 / V5	58341910

Spindel group

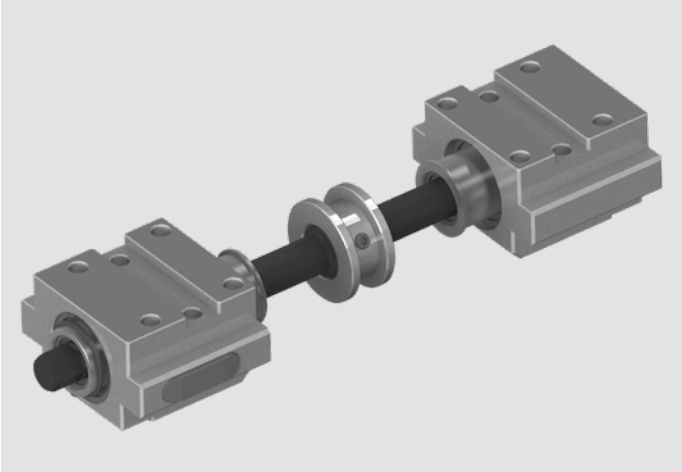

Type	Id. No.
IMG 88-130	58349010
IMG 125-180	58359030
IMG 125-220	58359010
IMG 125-320	58359020
IMG 160-270	58369010
IMG 160-420	58369020

Exploded

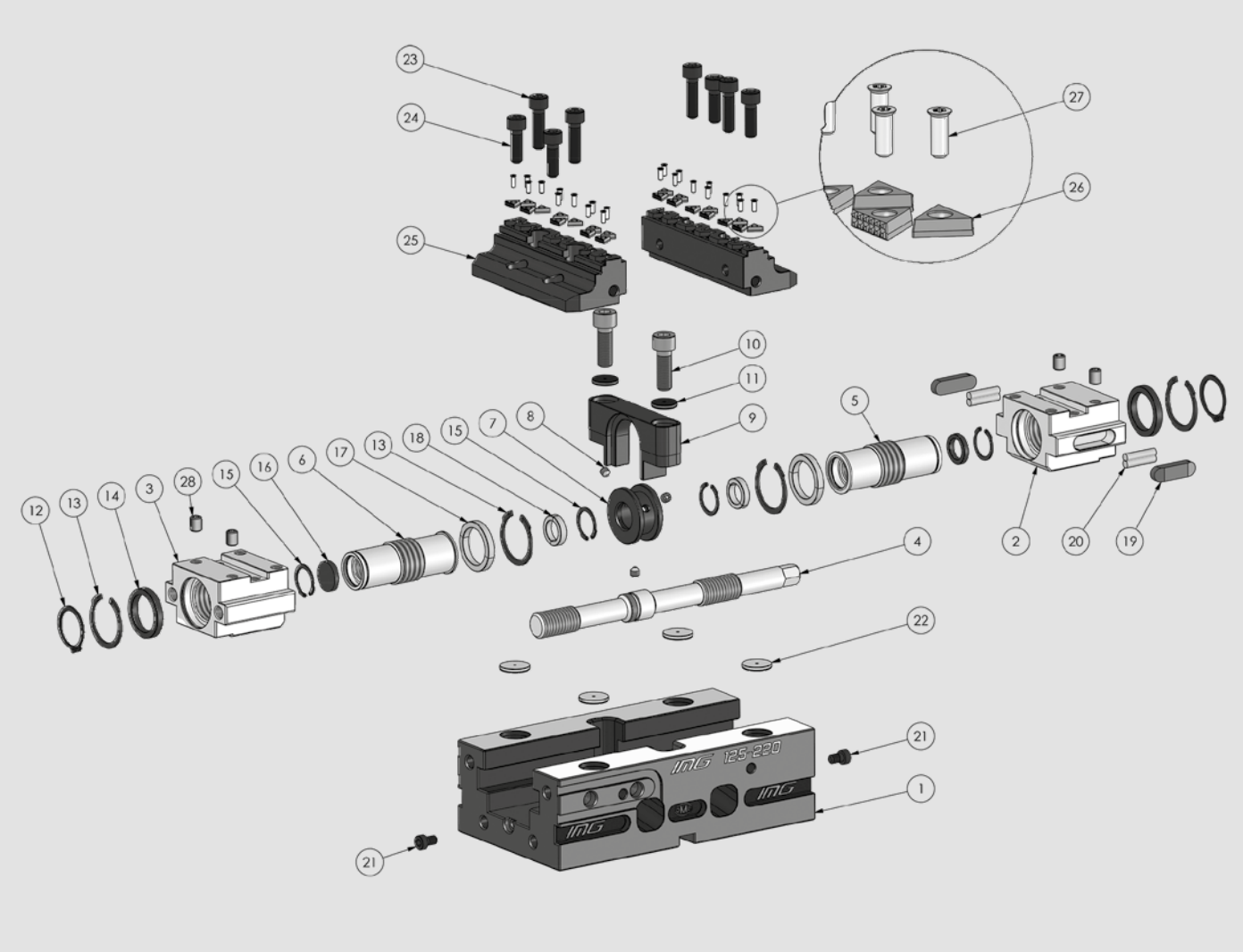

	Description
1	IMG BASE
2	LEFT SLIDE WAY
3	RIGHT SLIDE WAY
4	OPERATING SCREW
5	LEFT BUSHING
6	RIGHT BUSHING
7	SCREW STOP
8	SCREW
9	UPPER SUPPORT
10	SCREW

	Description
11	ALU PLUG FOR M10
12	SEEGER RING
13	SEEGER RING
14	O - RING
15	SEEGER RING
16	PLUG
17	BRONZE RING
18	SNAP RING
19	STOP KEY
20	RUBBER KEY

	Description
21	SCREW
22	ALU PLUG FOR M12
23	SCREW
24	SCREW
25	SINTERGRIP JAW
26	SINTERGRIP INSERTS
27	SCREW FOR SINTERGRIP
28	GRUB SCREW

5 axis

V5

Self-centering vice for 5-axis machines

V5 88-130

Page 5.2.4

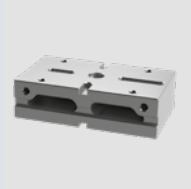

V5
Accessories

Page 5.2.7

V5 125-180

Page 5.2.5

V5
Working example

Page 5.2.8

V5
Alu pyramid

Page 5.2.6

V5

Self-centering vice for 5-axis machines

The self-centering **only** V5 vice is added to the IMG range with an excellent quality-price ratio, ideal for multi-vice integrated automation systems.

Working example

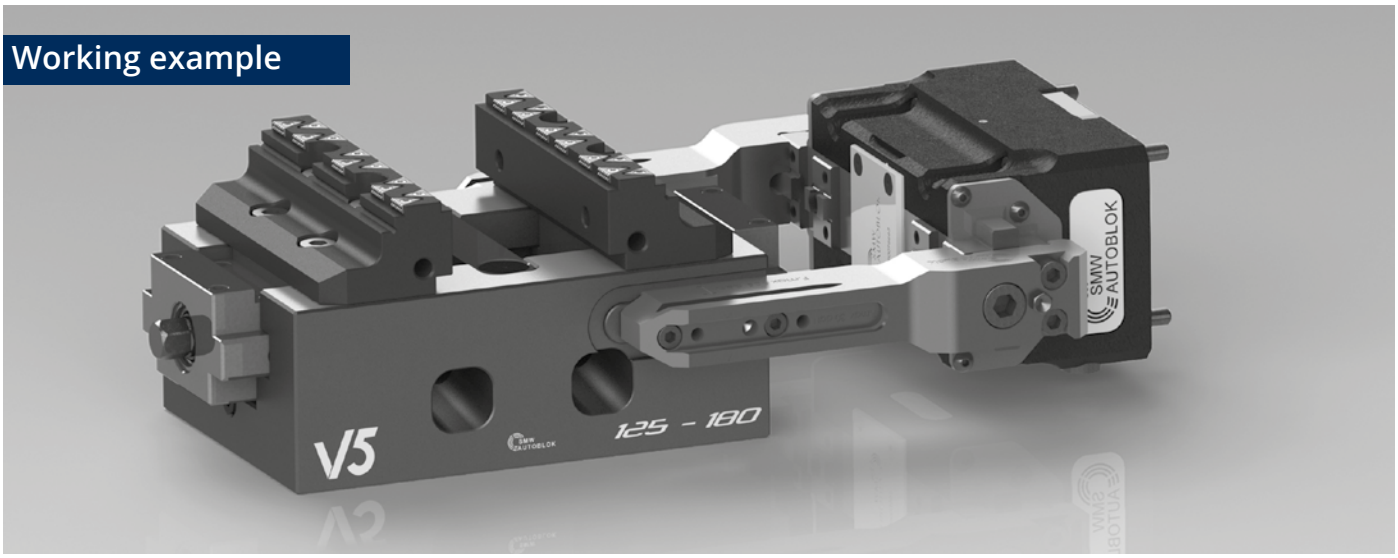

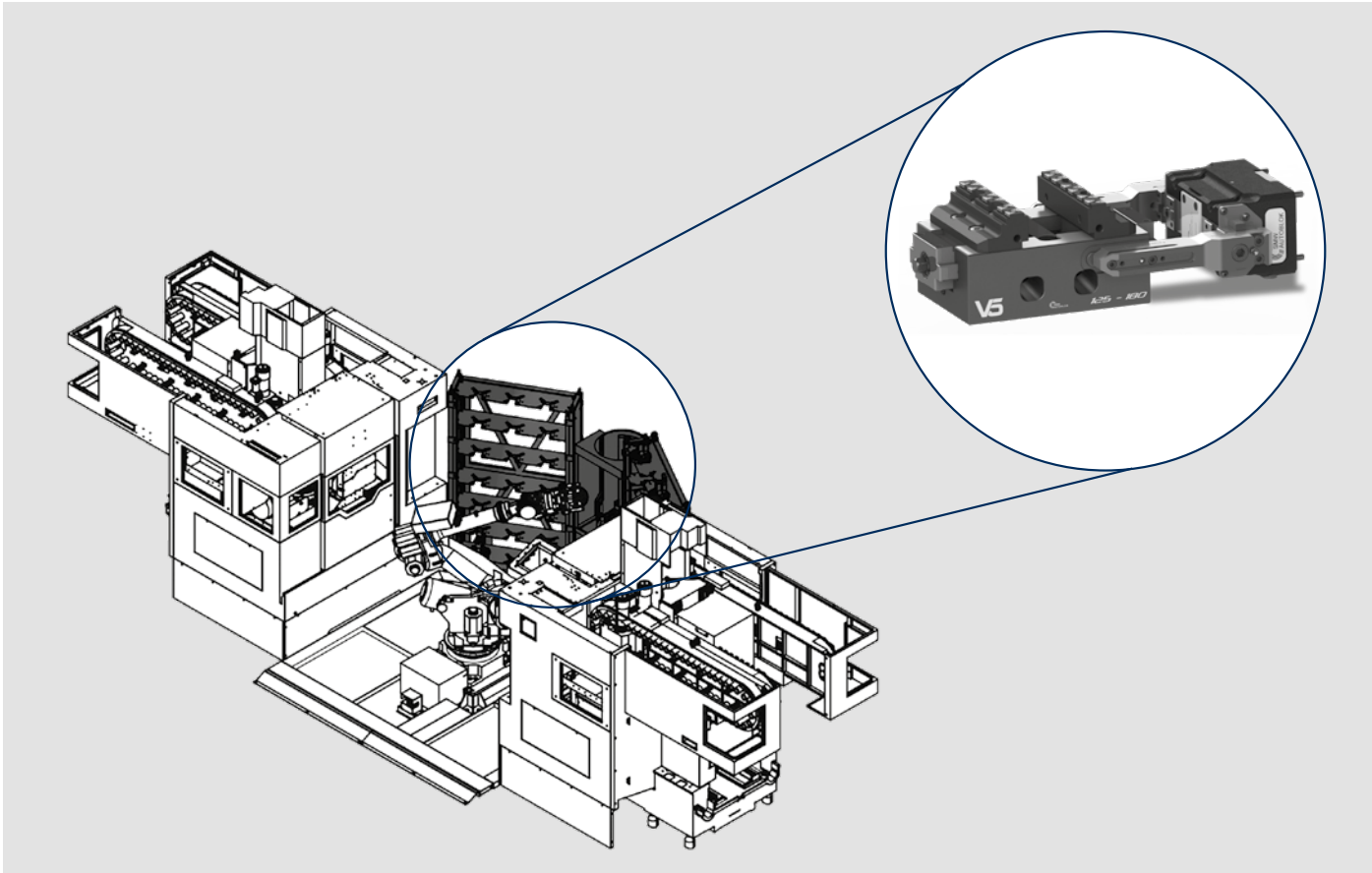

V5

Self-centering vice for 5-axis machines

SinterGrip jaws:
Reversible jaws for minimum clamping depth and without pre-machining

Totally protected screw

Ideal
For automation and palletizing systems

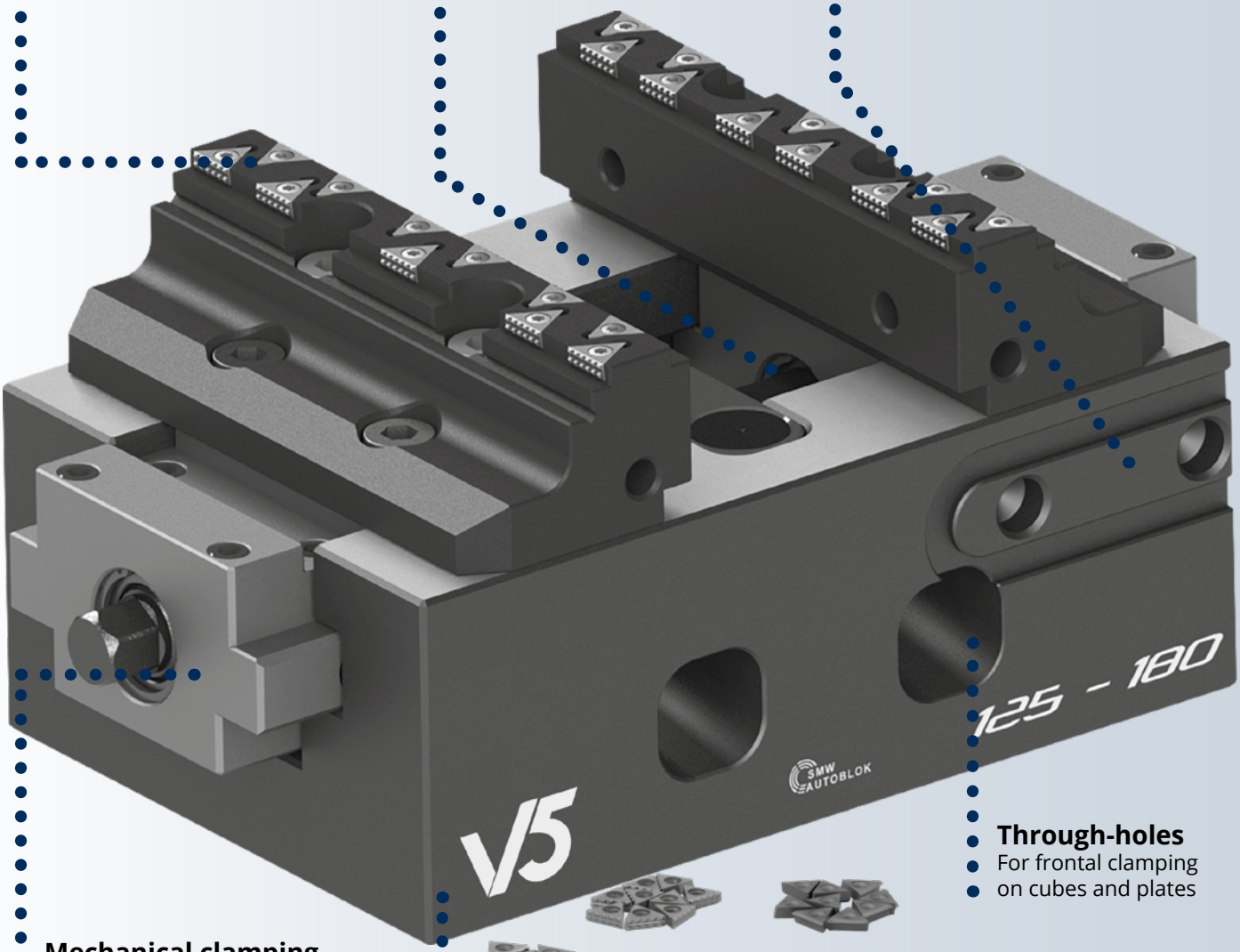

Through-holes
For frontal clamping on cubes and plates

Mechanical clamping
Totally protected screw.
The large power transmission allows high performance in the manufacturing process

Interface
For Zero Point clamping systems and Plus5 52 / 96

V5 BASIC

Basic jaws, without Sintergrip inserts

V5 88 - 130

V5 - Self-centering vice for 5-axis machines

■ **Patented protected screw**

Applications / Customer Benefits

- Highly precise **only** self-centering clamping with maximum repeatability
- Totally protected
- Compact design for better accessibility and very large drainage slots
- Jaws with SinterGrip clamping inserts for minimum workpiece clamping depth without pre-machining
- Wide clamping range
- Ideal for OP 10 and OP 20

Technical features

- Self-centering clamping
- Clamping force up to 32 kN (50 Nm)
- Jaw width 87,5 mm
- Interface for Zero Point system APS / TDM and Plus5 52
- Through-holes for frontal clamping on cubes and plates
- **The jaws for V5 88 are compatible with IMG 88**

Standard equipment

Wrench, jaws, nr. 10 Sintergrip inserts.

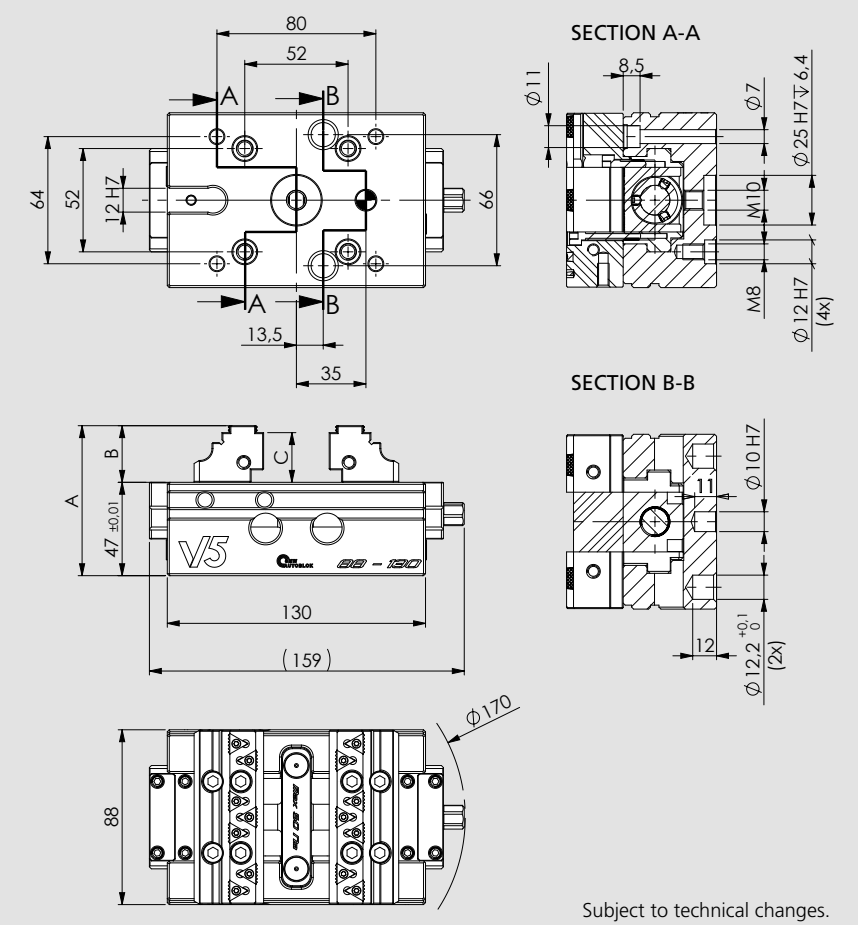

Subject to technical changes.

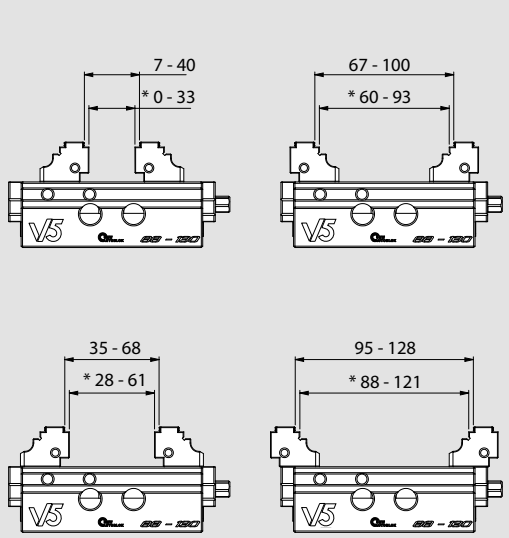

* Opening with smooth jaws
Valid dimensions fot both SinterGrip and Basic type

Subject to technical changes.

Type	Id. No.	A	B	C	Weight
V5 88 - 130 with SinterGrip jaws **STD**	77583303	75,5	28,5	25	4,5 Kg
V5 88 - 130 with SinterGrip jaws **HRC**	77583304	75,5	28,5	25	4,5 Kg
V5 88 - 130 with SinterGrip jaws **ALU**	77583305	75,5	28,5	25	4,5 Kg
V5 88 - 130 with SinterGrip jaws **PLM** (for polymer materials)	77583306	75,5	28,5	25	4,5 Kg
V5 88 - 130 H1* with SinterGrip jaws **STD**	77583303H1	65,5	18,5	15	4,5 Kg
V5 88 - 130 H1* with SinterGrip jaws **HRC**	77583304H1	65,5	18,5	15	4,5 Kg
V5 88 - 130 H1* with SinterGrip jaws **ALU**	77583305H1	65,5	18,5	15	4,5 Kg
V5 88 - 130 H1* with SinterGrip jaws **PLM** (for polymer materials)	77583306H1	65,5	18,5	15	4,5 Kg
V5 88 - 130 **Basic**	77583302	75,5	28,5	25	4,5 Kg
V5 88 - 130 H1* **Basic**	77583302H1	65,5	18,5	15	4,5 Kg
V5 88 - 130 body only	77583301	-	-	-	3,5 Kg

* Compatible in height with other vices on the market

V5 125 - 180

■ Patented protected screw

Applications / Customer Benefits

- Highly precise **only** self-centering clamping with maximum repeatability
- Totally protected
- Compact design for better accessibility and very large drainage slots
- Jaws with SinterGrip clamping inserts for minimum workpiece clamping depth without pre-machining
- Wide clamping range
- Ideal for OP 10 and OP 20

Technical features

- Self-centering clamping
- Clamping force up to 40 kN (80 Nm)
- Jaw width 125 mm
- Interface for Zero Point system APS / TDM and Plus 5 52 - 96
- Through-holes for frontal clamping on cubes and plates
- **The jaws for V5 125 are compatible with IMG 125.**

Standard equipment

Wrench, jaws, nr. 10 Sintergrip inserts.

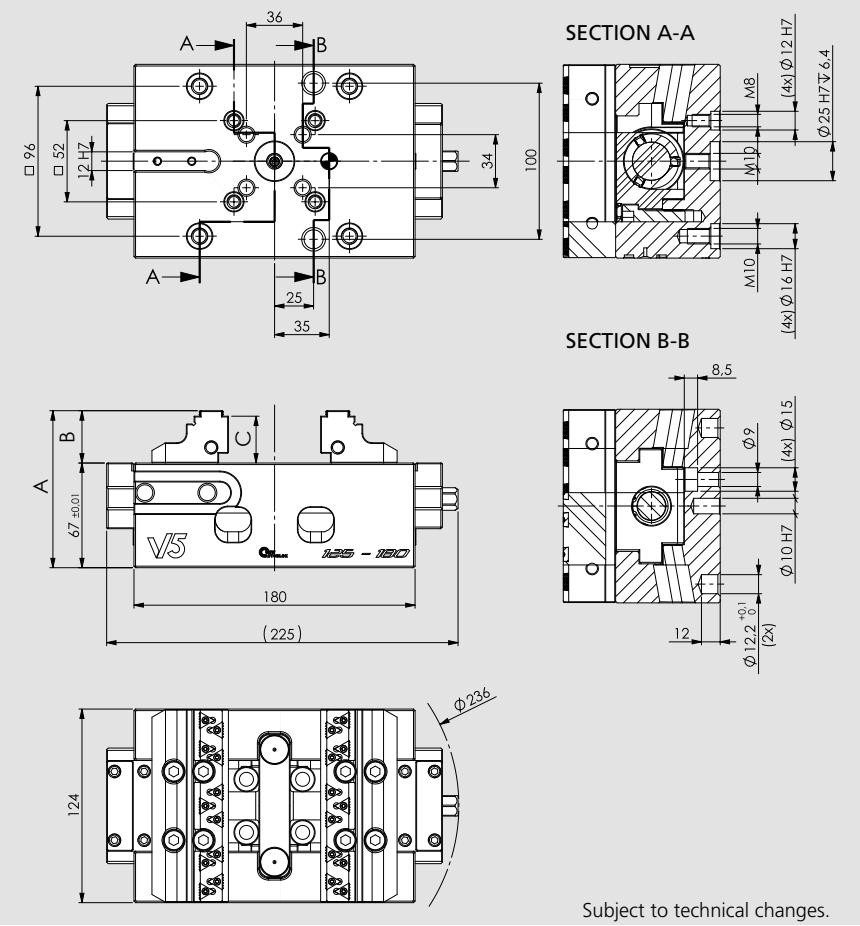

Subject to technical changes.

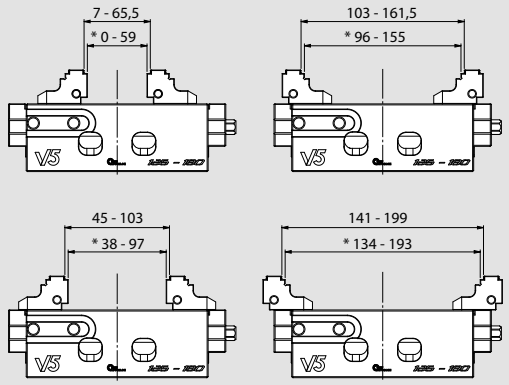

* Opening with smooth jaws
Valid dimensions fot both SinterGrip and Basic type

Subject to technical changes.

Type	Id. No.	A	B	C	Weight
V5 125 - 180 with SinterGrip jaws **STD**	77583333	100,5	33,5	30	12 Kg
V5 125 - 180 with SinterGrip jaws **HRC**	77583334	100,5	33,5	30	12 Kg
V5 125 - 180 with SinterGrip jaws **ALU**	77583335	100,5	33,5	30	12 Kg
V5 125 - 180 with SinterGrip jaws **PLM** (for polymer materials)	77583336	100,5	33,5	30	12 Kg
V5 125 - 180 H1* with SinterGrip jaws **STD**	77583333H1	89,5	22,5	19	12 Kg
V5 125 - 180 H1* with SinterGrip jaws **HRC**	77583334H1	89,5	22,5	19	12 Kg
V5 125 - 180 H1* with SinterGrip jaws **ALU**	77583335H1	89,5	22,5	19	12 Kg
V5 125 - 180 H1* with SinterGrip jaws **PLM** (for polymer materials)	77583336H1	89,5	22,5	19	12 Kg
V5 125 - 180 **Basic**	77583332	100,5	33,5	30	12 Kg
V5 125 - 180 H1* **Basic**	77583332H1	89,5	22,5	19	12 Kg
V5 125 - 180 body only	77583331	-	-	-	10 Kg

* Compatible in height with other vices on the market

V5

Alu pyramid for V5 88-130 / 125-180

Applications / Customer Benefits

- Ideal for 5 axis machines
- Compact design
- Possibility to be mounted directly on machine tools with radial slots at 45 / 60 degrees
- Possibility to be mounted directly on APS Zero Point system and Plus5

Technical features

- Material: ALU

Standard equipment

Positioning keys and screws for IMG, V5 and E5 vises
Pins and screws

IMG 88 - 130
V5 88 - 130
E5 88 - 130
PLUS 5 - 52

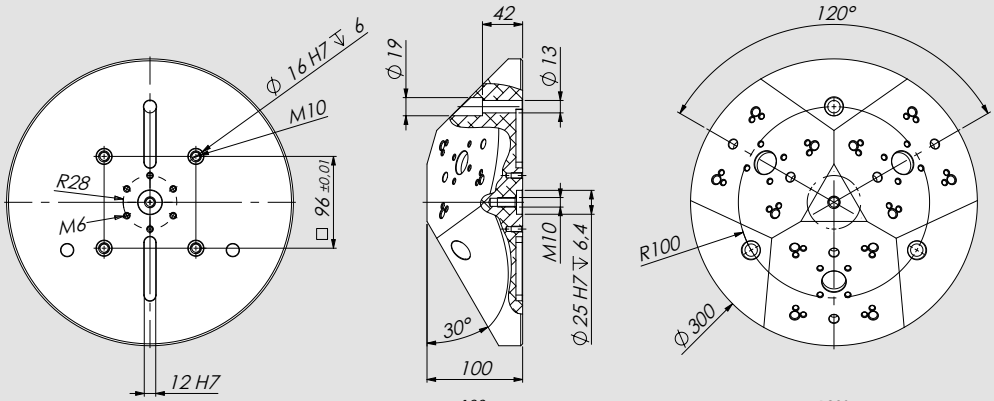

IMG 125 - 180
IMG 125 - 220
V5 125 - 180
E5 125 - 180
PLUS 5 - 96

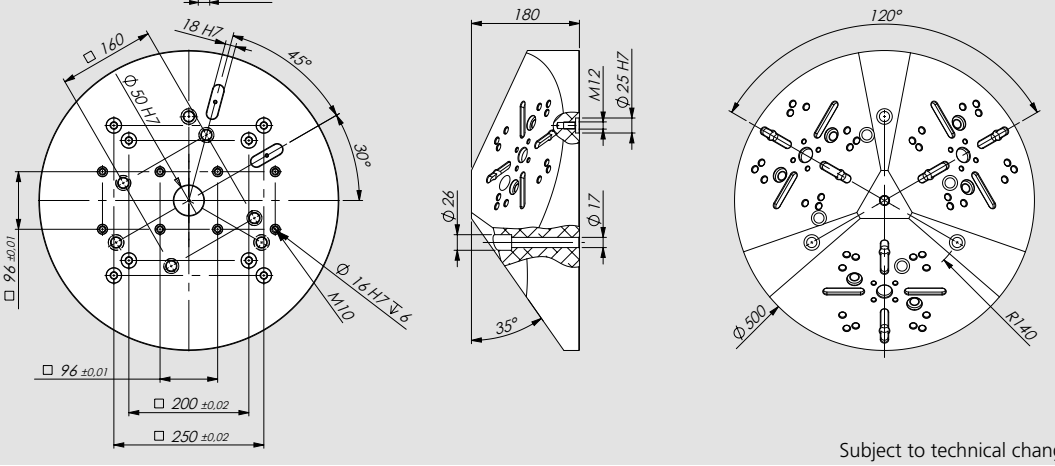

Subject to technical changes.

Type	Id. No.	Weight (Kg)
For IMG, V5, E5 88-130 and PLUS 5 - 52	58343210	12
For IMG 125-180, IMG 125-220, V5, E5 125-180 and PLUS 5 - 96	58353210	55

Application example

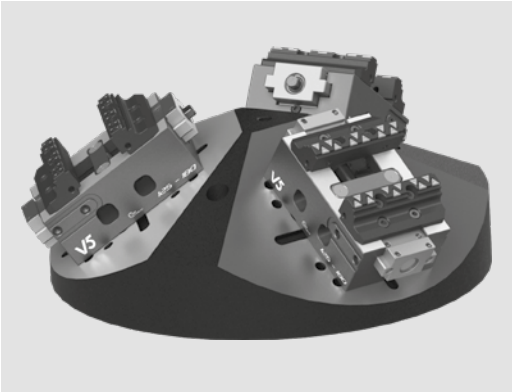

Riser

Applications / Customer Benefits

- Ideal for 5 axis machines
- Compact design
- Possibility to be mounted directly on machine tools with T slots
- Possibility to be mounted directly on single plate or DUO APS (pitch 200)

Technical features

- Material: steel

Standard equipment

On request: Positioning keys for IMG / APS pins / Positioning keys for machine tool

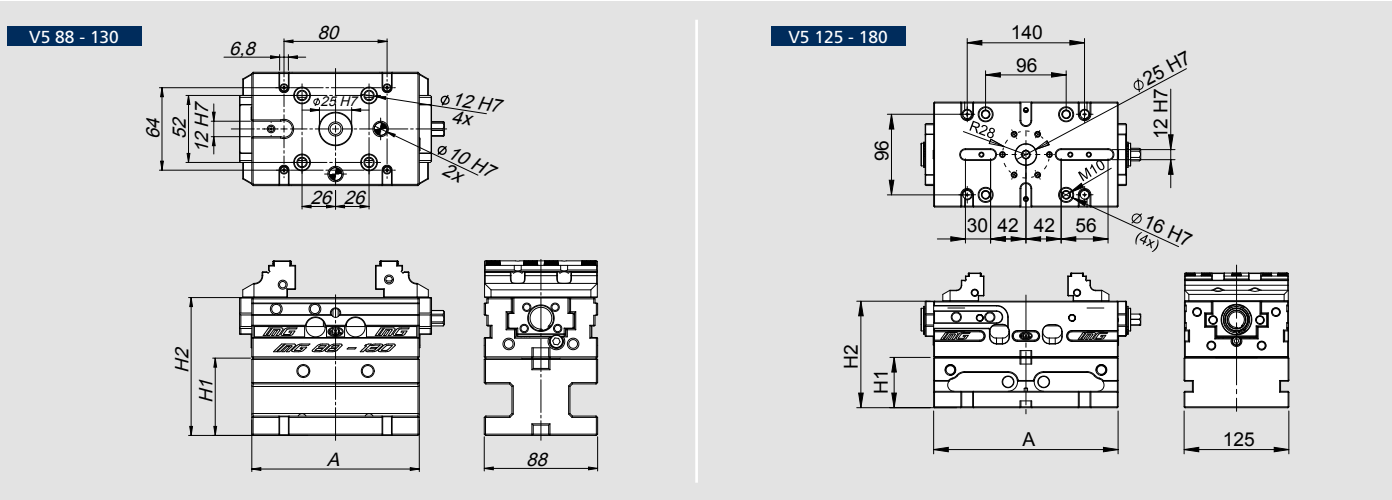

Type	Id. No.	H1	H2	A	Weight
For V5 88 - 130	58342018	60	107	130	4 Kg
For V5 88 - 130	58342028	100	207	130	6 Kg
For V5 125 - 180	58352017	60	124	180	8 Kg
For V5 125 - 180	58352027	100	147	180	12 Kg

Key for single use on APS 140 (vice body side)

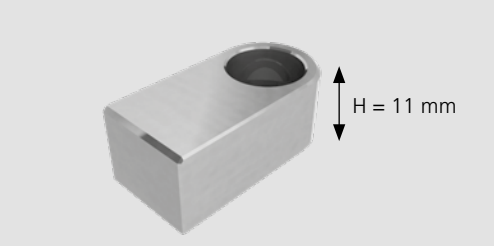

Type	Id. No.
V5 88	58351312
V5 125	

V5

Self-centering vice for 5-axis machines

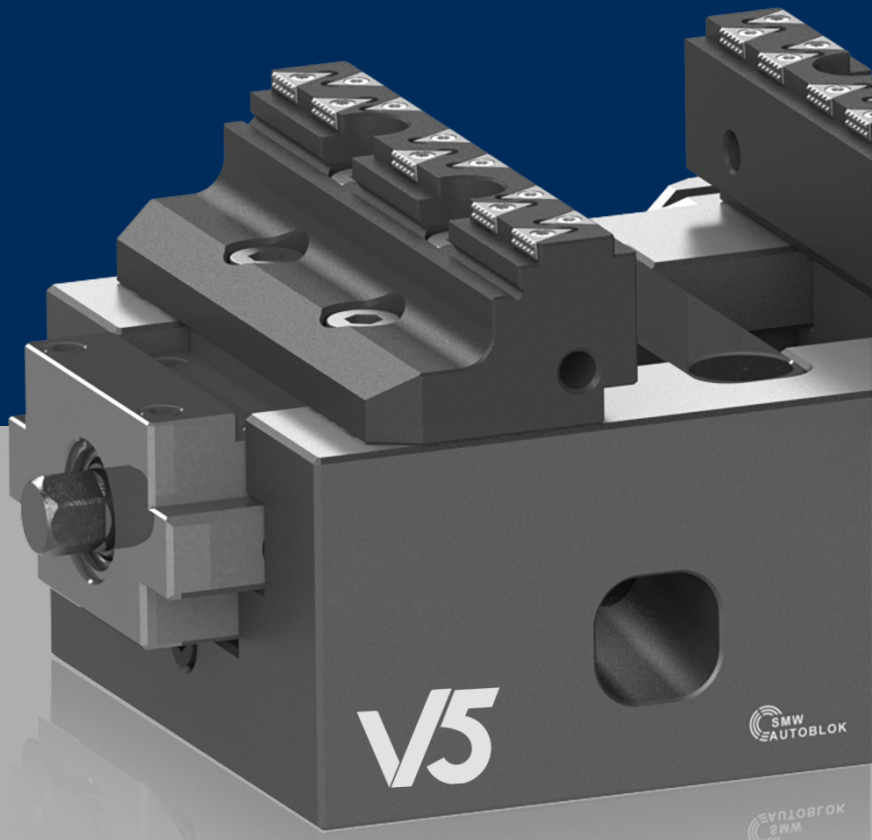

Self-centering vice for 5-axis machines

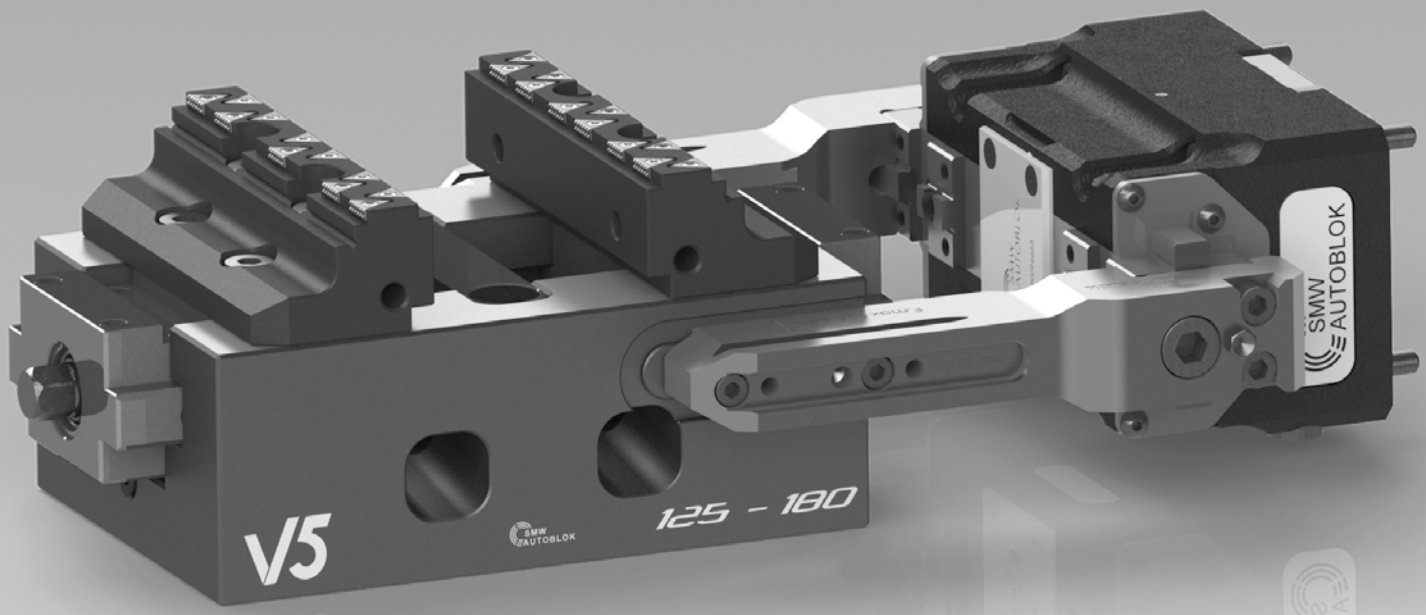

5 axis

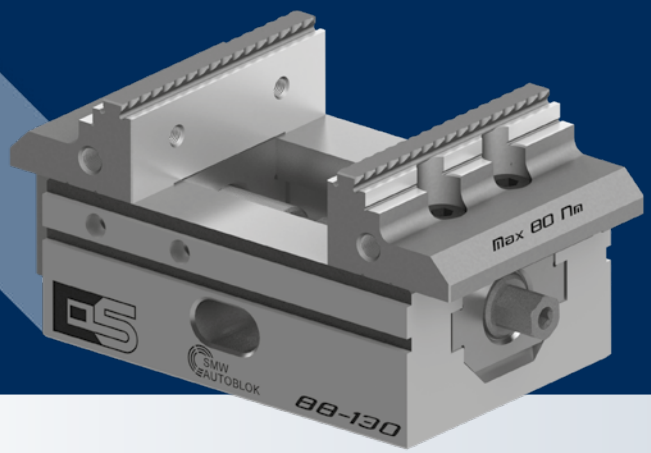

Self-centering vice for 5-axis machines

The Essential choice for 5-axis machining

E5 88-130

Page 5.3.2

E5
Accessories

Page 5.3.5

E5 125-180

Page 5.3.3

E5
Spare parts

Page 5.3.7

E5
Alu pyramid

Page 5.3.4

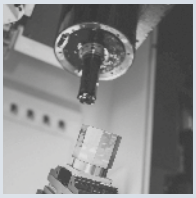

E5
Description

Page 5.3.8

E5 88 - 130

E5 - Self-centering vice for 5-axis machines

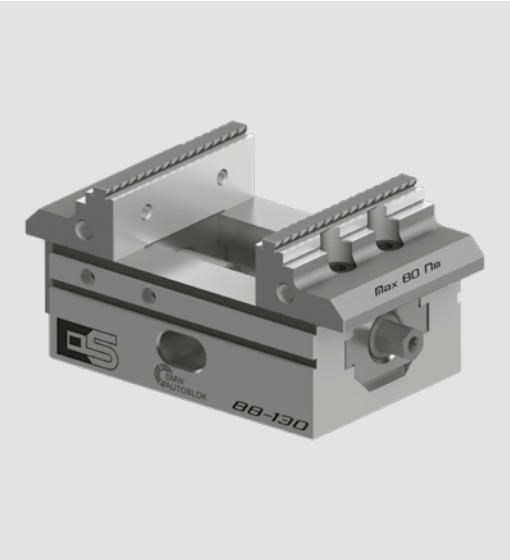

Applications / Customer Benefits

- Highly precise **only** self-centering clamping with maximum repeatability
- Compact design for improved accessibility and very wide chip evacuation openings
- Ideal for OP 10 and OP 20

Technical features

- Self-centering clamping
- Clamping force up to 15 kN (80 Nm)
- Jaw width 84 mm
- Interface for Zero Point system APS / TDM and Plus5 52
- Through-holes for frontal clamping on cubes and plates

Wrench

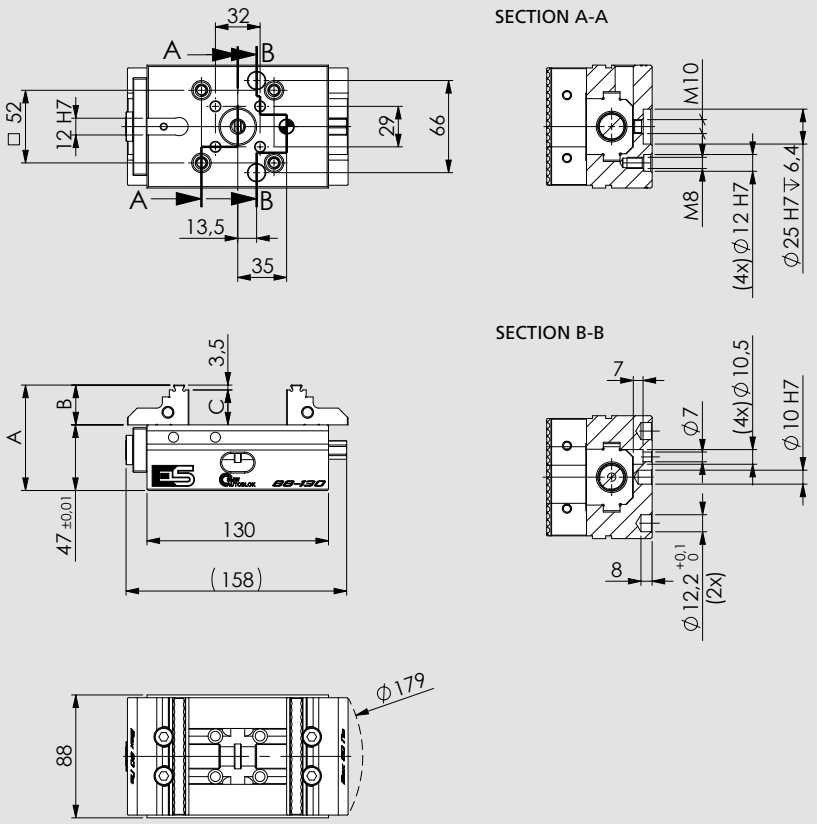

Subject to technical changes

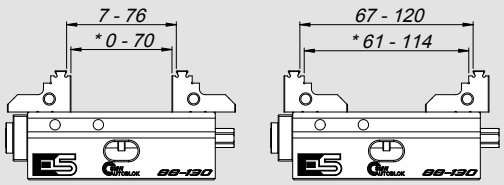

* Opening with smooth jaws

Subject to technical changes

Id. No.	Weight (Kg)
77583352	4,5

E5 125 - 180

Applications / Customer Benefits

- Highly precise **only** self-centering clamping with maximum repeatability
- Compact design for improved accessibility and very wide chip evacuation openings.
- Ideal for OP 10 and OP 20

Technical features

- Self-centering clamping
- Clamping force up to 25 kN (130 Nm)
- Jaw width 124 mm
- Interface for Zero Point system APS, TDM and Plus5 52/96
- Through-holes for frontal clamping on cubes and plates

Wrench

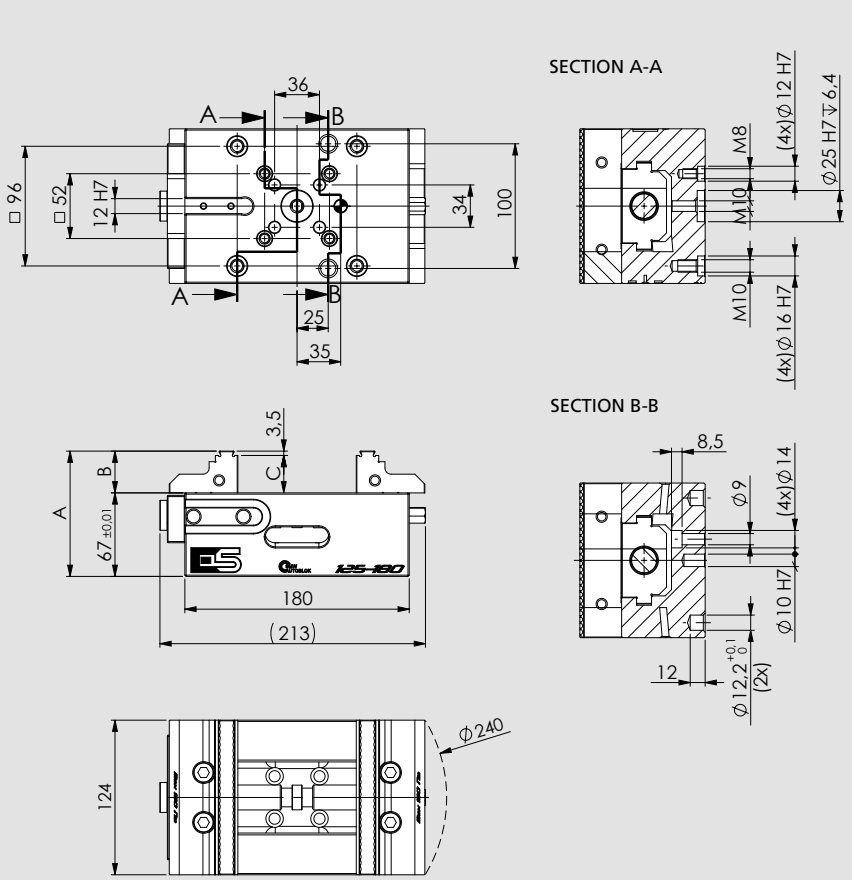

Subject to technical changes

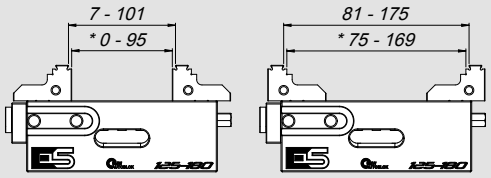

* Opening with smooth jaws

Subject to technical changes

Id. No.	Weight (Kg)
77583362	12,5

E5

Alu pyramid for V5 88-130 / 125-180

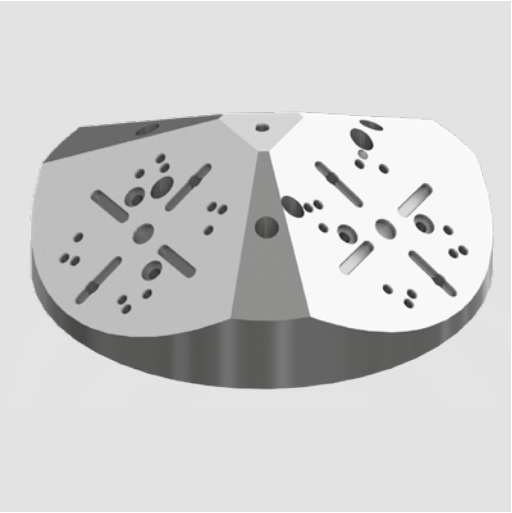

Applications / Customer Benefits

- Ideal for 5 axis machines
- Compact design
- Possibility to be mounted directly on machine tools with radial slots at 45 / 60 degrees
- Possibility to be mounted directly on APS Zero Point system and Plus5

Technical features

- Material: ALU

Standard equipment

Positioning keys and screws for IMG, V5 and E5 vises
Pins and screws

IMG 88 - 130
V5 88 - 130
E5 88 - 130
PLUS 5 - 52

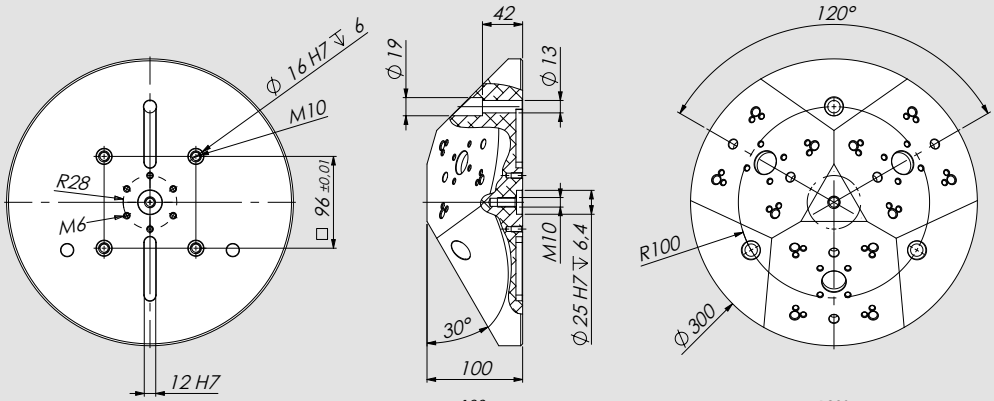

IMG 125 - 180
IMG 125 - 220
V5 125 - 180
E5 125 - 180
PLUS 5 - 96

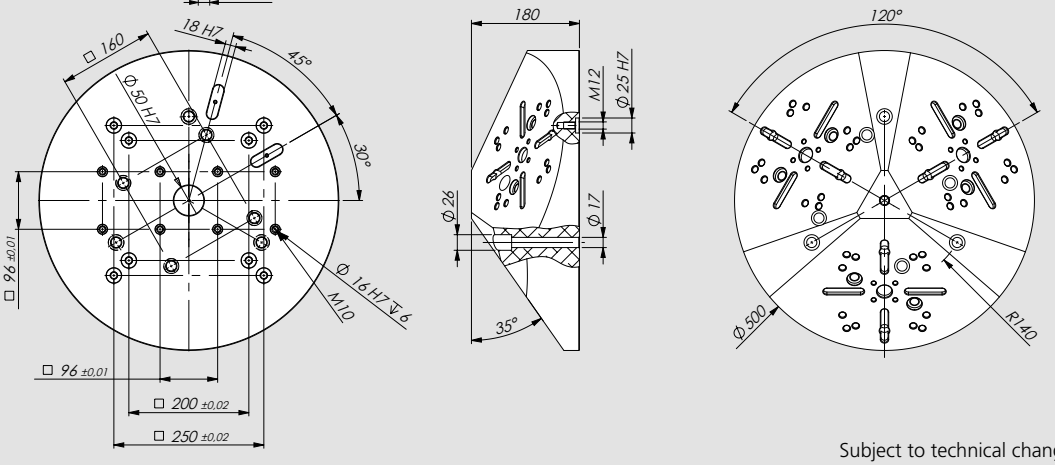

Subject to technical changes.

Type	Id. No.	Weight (Kg)
For IMG, V5, E5 88-130 and PLUS 5 - 52	58343210	12
For IMG 125-180, IMG 125-220, V5, E5 125-180 and PLUS 5 - 96	58353210	55

Application example

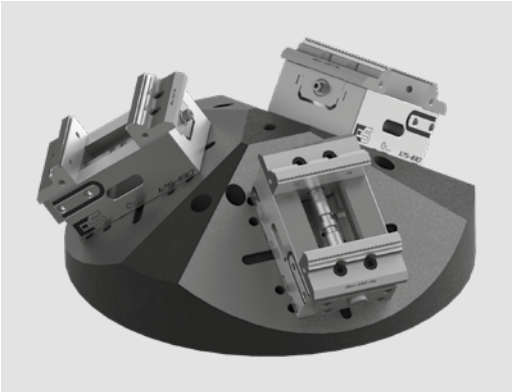

Riser

Applications / Customer Benefits

- Ideal for 5 axis machines
- Compact design
- Possibility to be mounted directly on machine tools with T slots
- Possibility to be mounted directly on single plate or DUO APS (pitch 200)

Technical features

- Material: steel

Standard equipment

On request: Positioning keys for IMG / APS pins / Positioning keys for machine tool

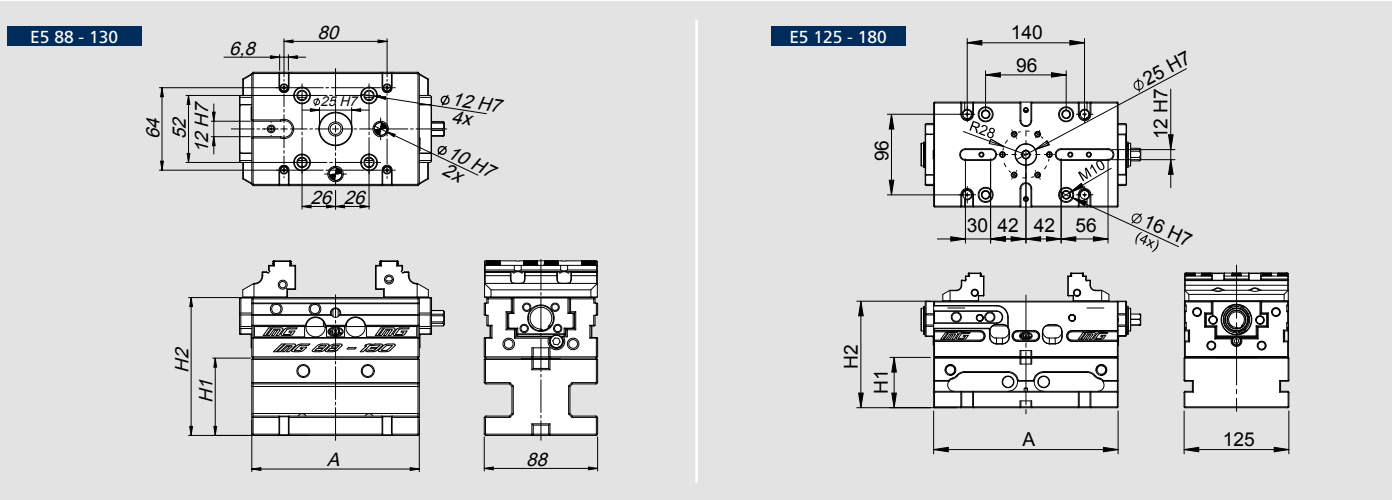

Type	Id. No.	H1	H2	A	Weight
For E5 88 - 130	58342018	60	107	130	4 Kg
For E5 88 - 130	58342028	100	207	130	6 Kg
For E5 125 - 180	58352017	60	124	180	8 Kg
For E5 125 - 180	58352027	100	147	180	12 Kg

Pair of soft jaws (soft steel – ALU)

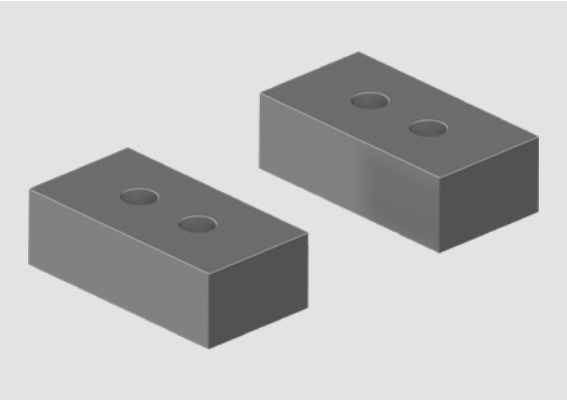

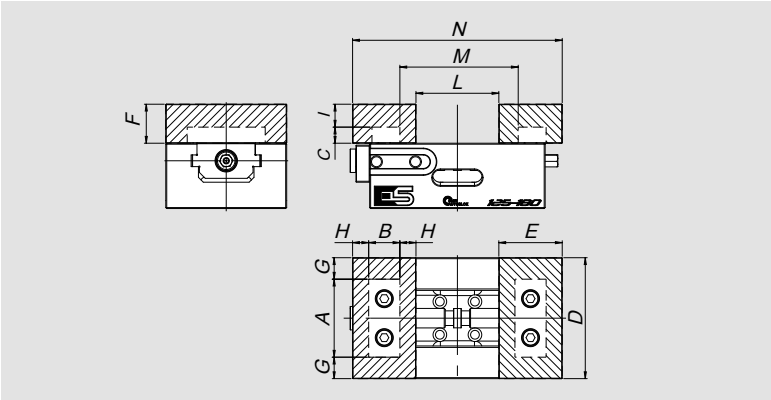

Type		Id. No.	A	B	C	D	E	F	G	H	I	L	M	N
E5 88 - 130	ALU	58335619	55	24	13	84	45	40	14,5	10,5	27	61	82	151
E5 88 - 130	Fe	58335629	55	24	13	84	45	40	14,5	10,5	27	61	82	151
E5 125 - 180	ALU	58336619	80	32	16,5	124	65	40	22	16,5	23,5	85	121	215
E5 125 - 180	Fe	58336629	80	32	16,5	124	65	40	22	16,5	23,5	85	121	215

Key for single use on APS 140 (vice body side)

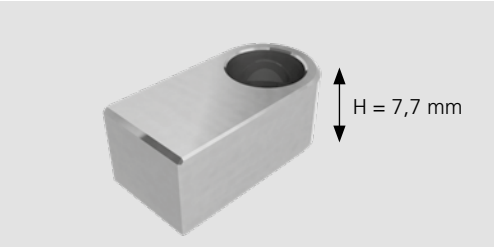

Type	Id. No.
E5 88	46162329

Key for single use on APS 140 (vice body side)

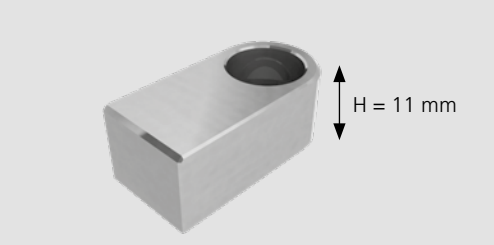

Type	Id. No.
E5 125	58351312

Torque Wrench

Type	Id. No.
E5 88	51501027
E5 125	51501028

Pair of BASIC jaws (for materials up to 30 HRC)

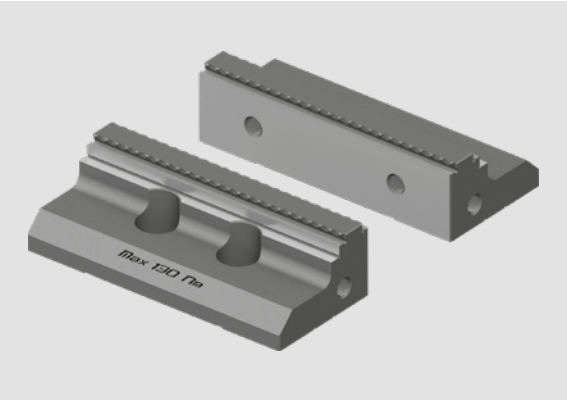

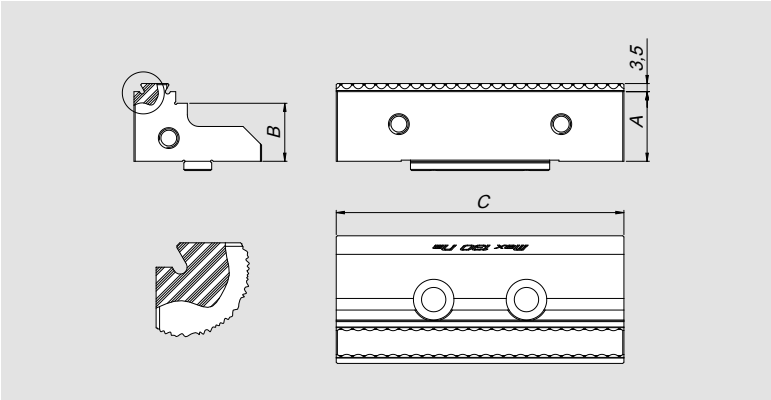

Type	Id. No.	A	B	C
E5 88 - 130	58335259	25	20	84
E5 88 - 130 H1	58335269	15	11	84
E5 125 - 180	58336259	30	25	124
E5 125 - 180 H1	58336269	19	14	124

Spindel group

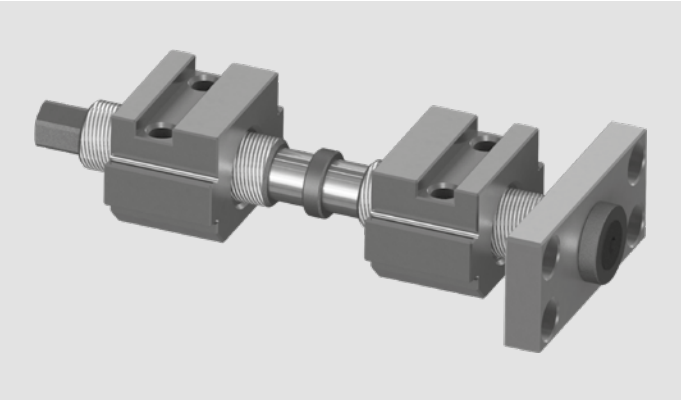

Type	Id. No.
E5 88-130	58339050
E5 125-180	58339060

E5 - Self-centering vice for 5-axis machines

The E5 vice, **self-centering only** and with an essential design, represents the effective and competitive choice within the OML range.

- Basic jaw only
- Unprotected screw
- Interface for zero-point clamping systems and Plus 5 52/96
- Automation ready interface
- Through-holes for frontal clamping on cubes and plates
- Very large chip evacuation openings
- Hardened and precision-ground guideways for maximum accuracy and repeatability

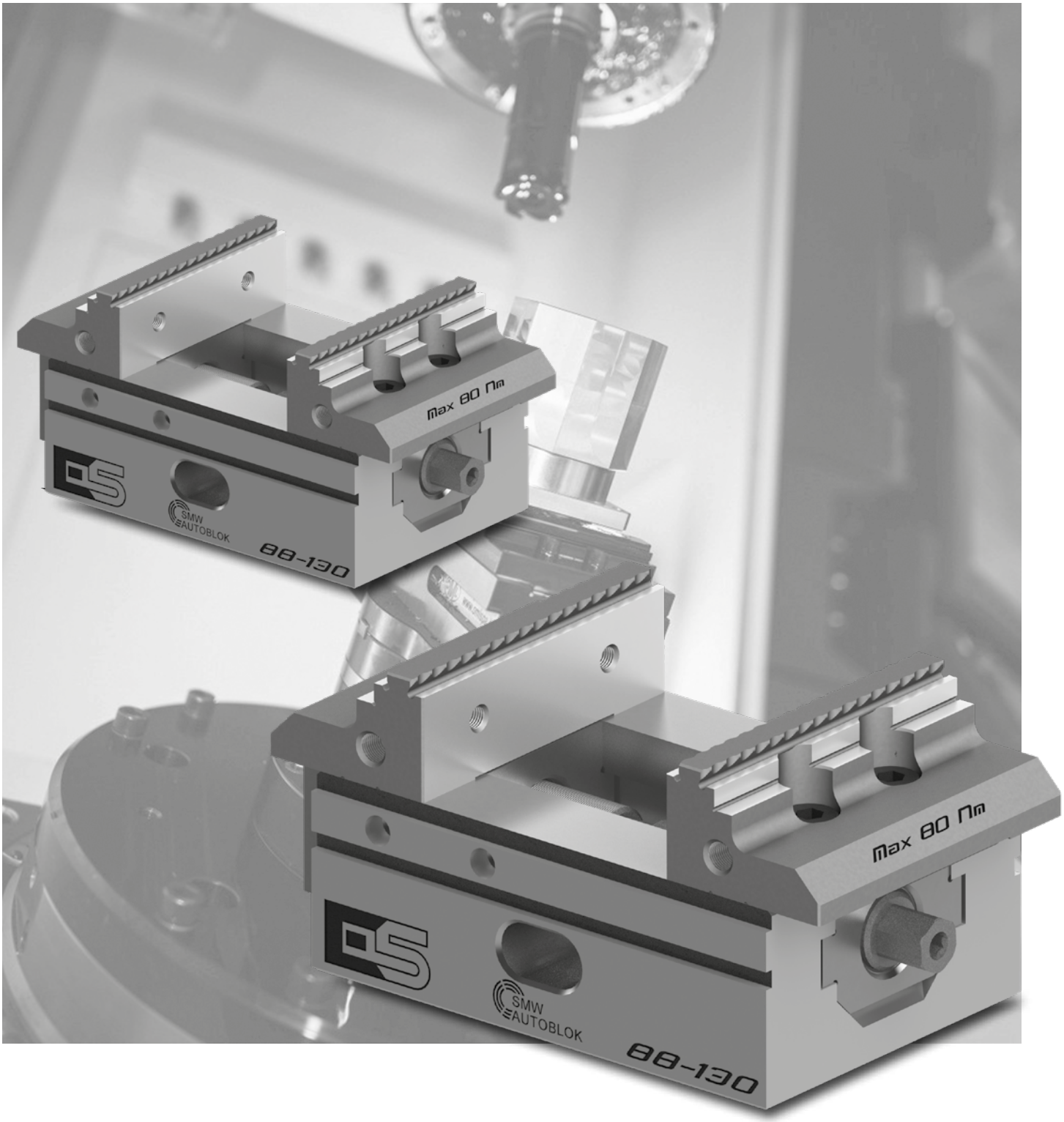

GENIUS & SinterGrip

5.4

Precision vise for 5 axis machine tools

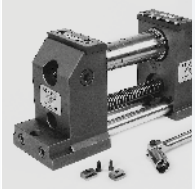

GENIUS & SinterGrip

Page 5.4.5

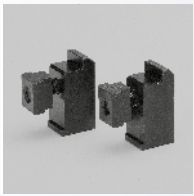

GENIUS
Accessories

Page 5.4.6

GENIUS
Spare parts

Page 5.4.10

"GENIUS" & SinterGrip

MAIN FEATURES

1 The clamping force (up to 40 kN) is generated right where it is needed: at the part.

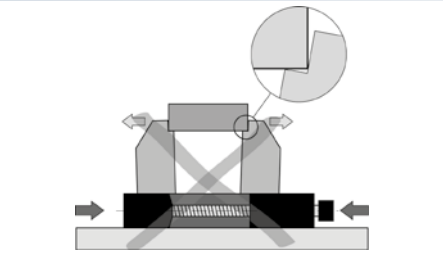

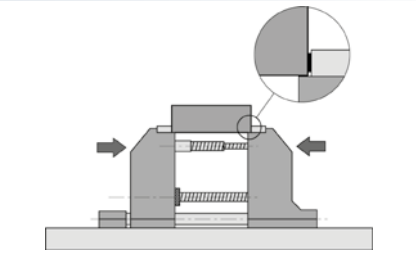

2 Thanks to its own expanding screw, GENIUS can clamp workpieces up to 200 mm with just one set-up.

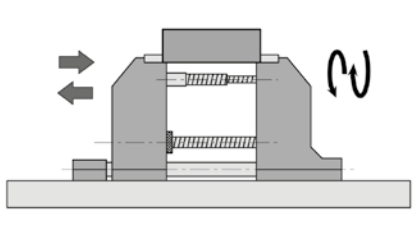

3 Unlike traditional vises, GENIUS clamps the workpieces by means of traction clamping.

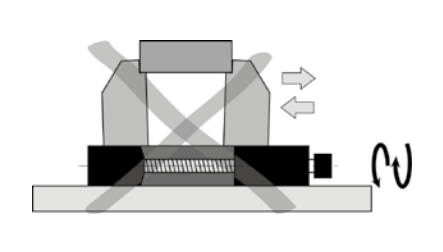

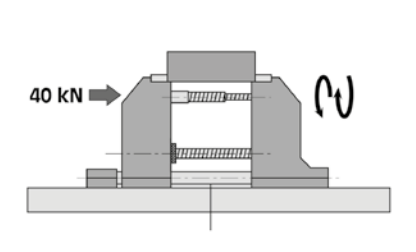

4 GENIUS is the first vise designed for 5 axis-machine tools that can be used for high precision milling operations.

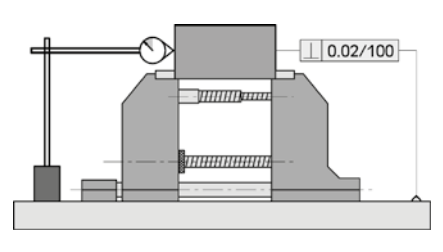

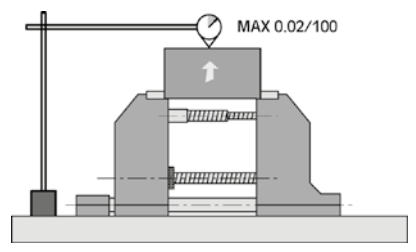

5 The movement of the jaws is not on a base, but on hardened and ground shafts.
This allows for quicker and more accurate positioning of both the same axis with the centre of the machine tool pallet.

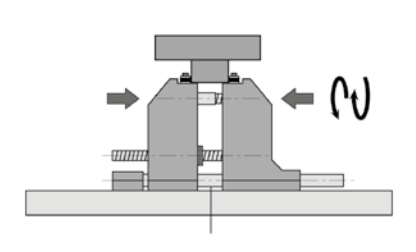

"GENIUS" & SinterGrip

Precision vise for 5 axis machine tools

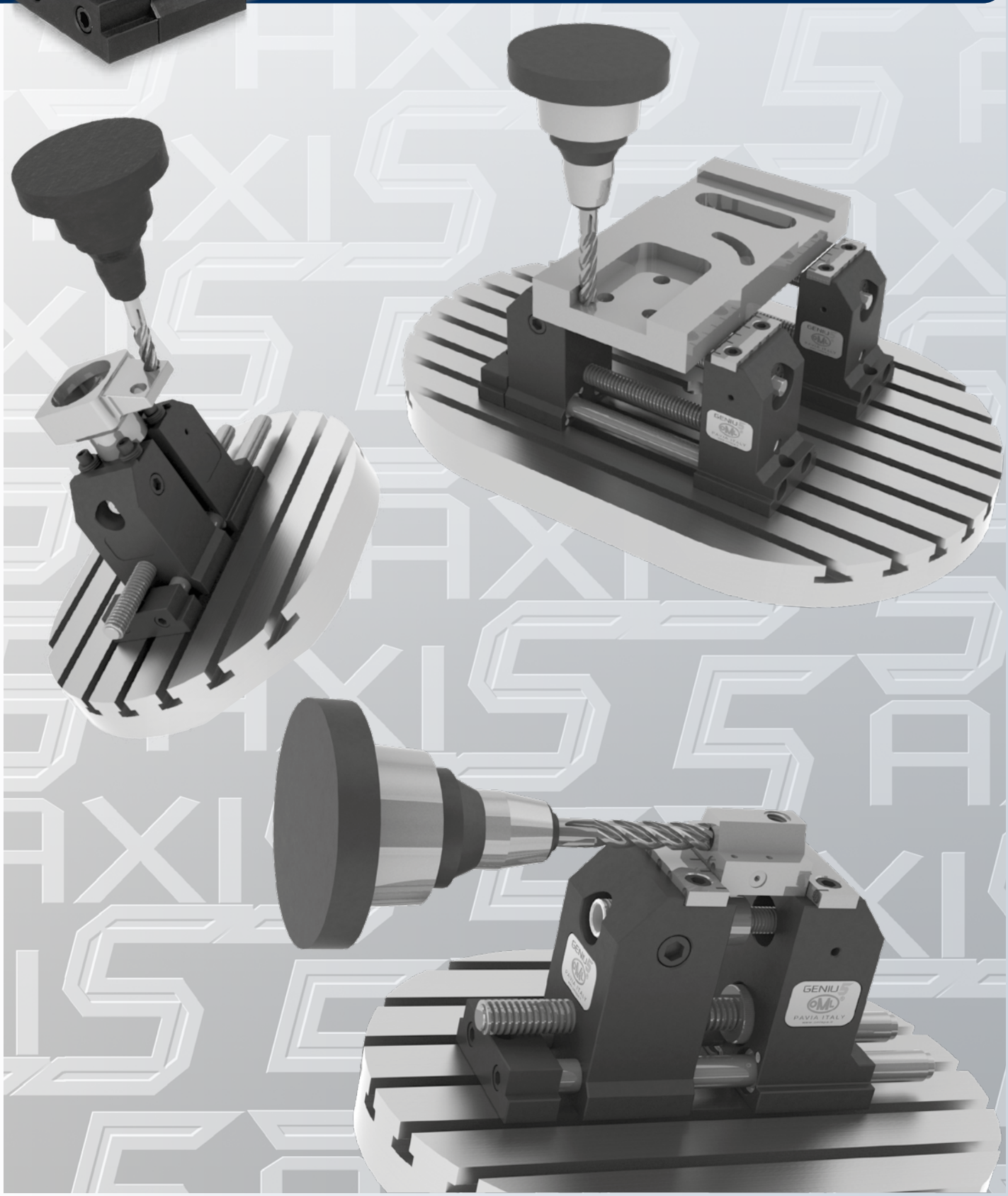

SinterGrip

Our new patented product **SinterGrip** is born to satisfy the current need to clamp a workpiece for very few millimeters (with SinterGrip 3,5 mm clamping surface), and this for the following reasons:

1) In order to machine the workpiece completely in a single operation (especially for 5 axis machines);

2) In order to save money for the raw materials, especially when they have a big impact on the price (aluminum, titanium, etc.)

Indirectly to these reasons, and in order to improve the performance of the machine tool and the tools

higher cutting speed + higher feed rate =
bigger volume of metal removed =
less time to machine the workpiece

the market requires safe clamping, which could at the same time possibly avoid the deformations of the piece itself.

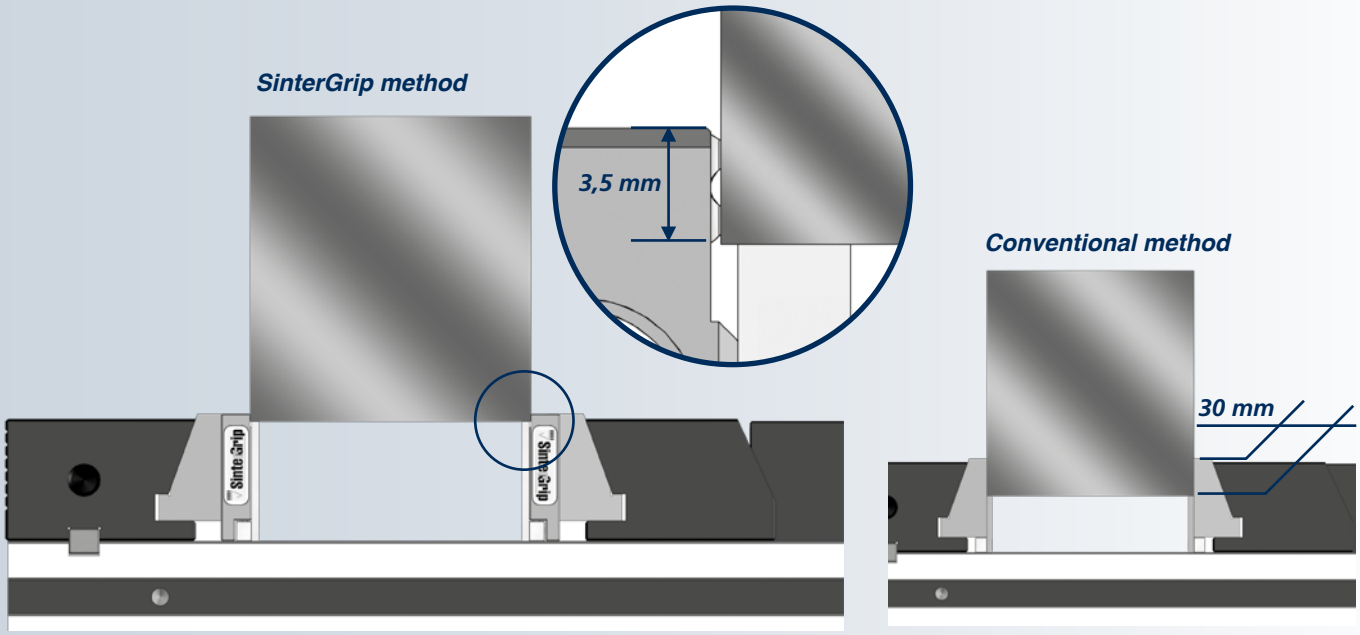

Only 3,5 mm clamping surface, no need of pre-machining the workpiece, clamping stability, higher cutting rate: **SinterGrip** brings only advantages compared to the traditional systems.

On the contrary, traditional systems need, for the clamping of the workpiece, a bigger clamping surface, with the result of waste of raw materials and greater possibility of deformation of the workpiece.

GENIUS & SINTERGRIP

GENIUS vise

supplied with:

- Wrench
- Pair of positioning keys
- SinterGrip inserts for steel*
- Work stop

* on request SinterGrip inserts HRC or ALU

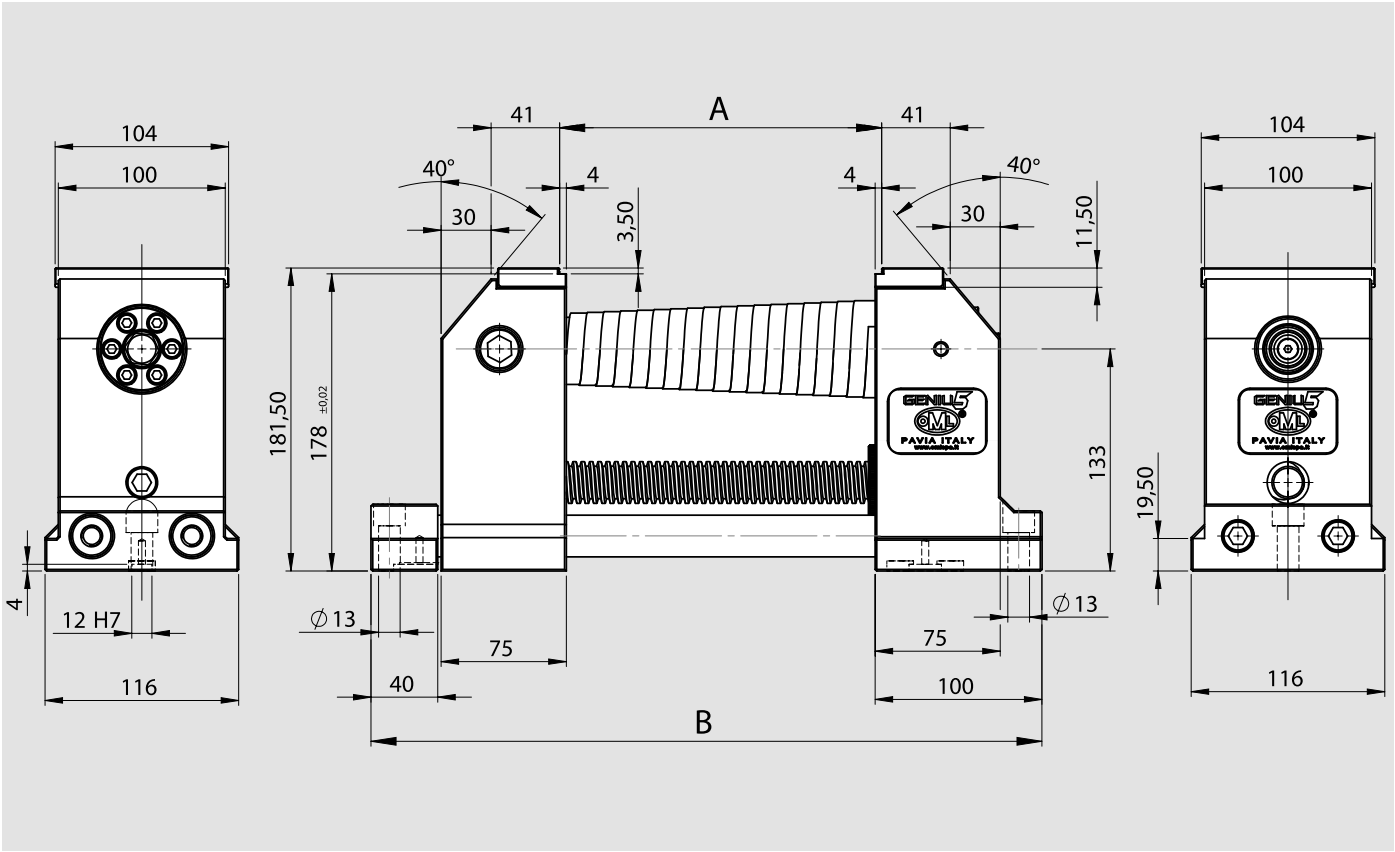

type	Id. No.	A*	B	Weight
GENIUS 100	77585011	100	321	23 Kg
GENIUS 200	77585012	200	412	25 Kg

***** Special opening "A" upon request

Special applications upon request

WORK STOP

Id. No.
58505000

PAIR OF SMOOTH/GROOVED JAWS

Id. No.
58504119

PAIR OF CLAMPS

complete with screw and T-nuts

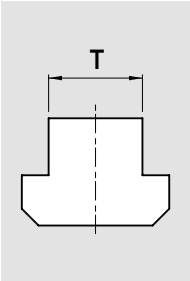

Id. No.					
mm 12	mm 14	mm 16	mm 18	mm 20	mm 22
58022792	58022793	58022794	58022795	58022796	58022797

PAIR OF NUTS

complete with screws M12

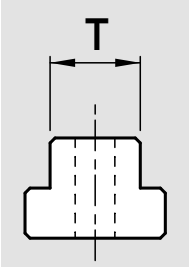

Id. No.				
T mm 14	**T** mm 16	**T** mm 18	**T** mm 20	**T** mm 22
58502593	58502594	58502595	58502596	58502597

PAIR OF POSITIONING KEY

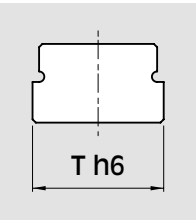

Id. No.					
mm 12 h6	mm 14 h6	mm 16 h6	mm 18 h6	mm 20 h6	mm 22 h6
58011592	58011593	58011594	58011595	58011596	58011597

TORQUE WRENCH

Id. No.
51501006

SET OF 4 “GRIPPERS” H11 SMOOTH

Id. No.
58906114

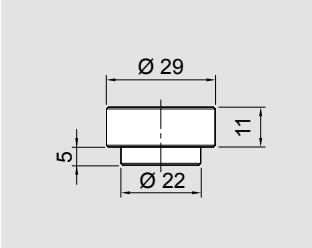

SET OF 4 “GRIPPERS” H11 SERRATED

Id. No.
58906124

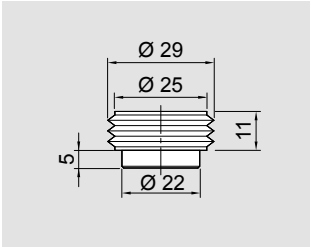

SET OF 4 “GRIPPERS” H19 SMOOTH

Id. No.
58906214

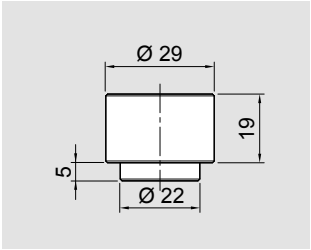

SET OF 4 “GRIPPERS” H19 SERRATED

Id. No.
58906224

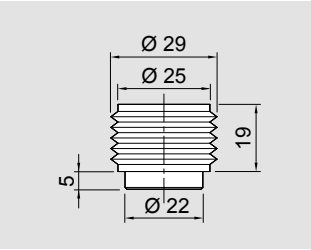

SET OF 4 “GRIPPERS” H24 SMOOTH

Id. No.
58906314

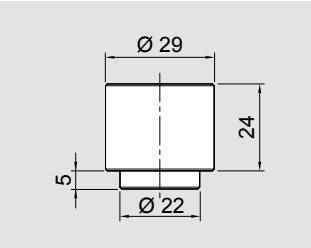

SET OF 4 “GRIPPERS” H24 SERRATED

Id. No.
58906324

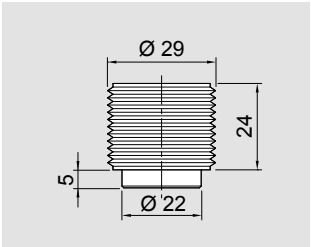

WORKING EXAMPLE WITH GRIPPERS

WORKING EXAMPLE WITH SINTERGRIP

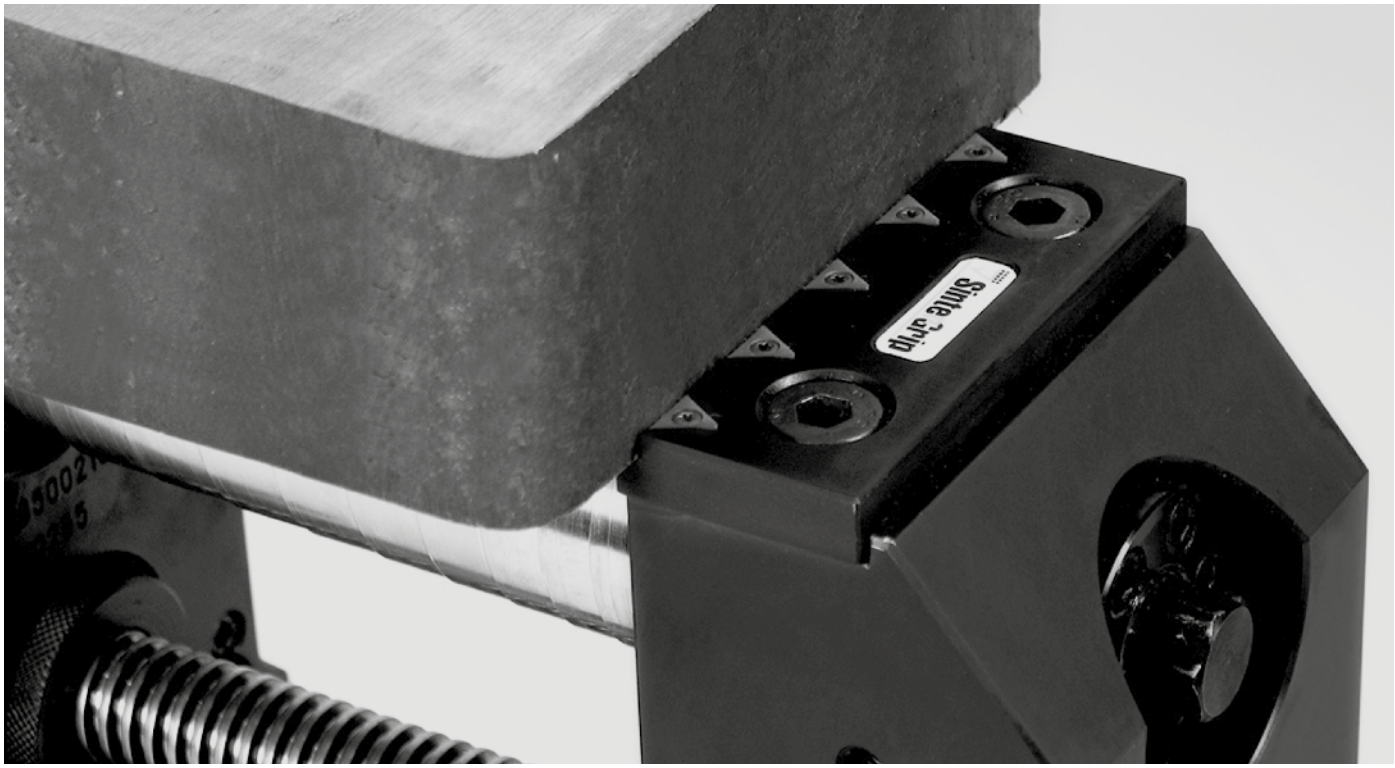

GENIUS
OML
PAVIA ITALY

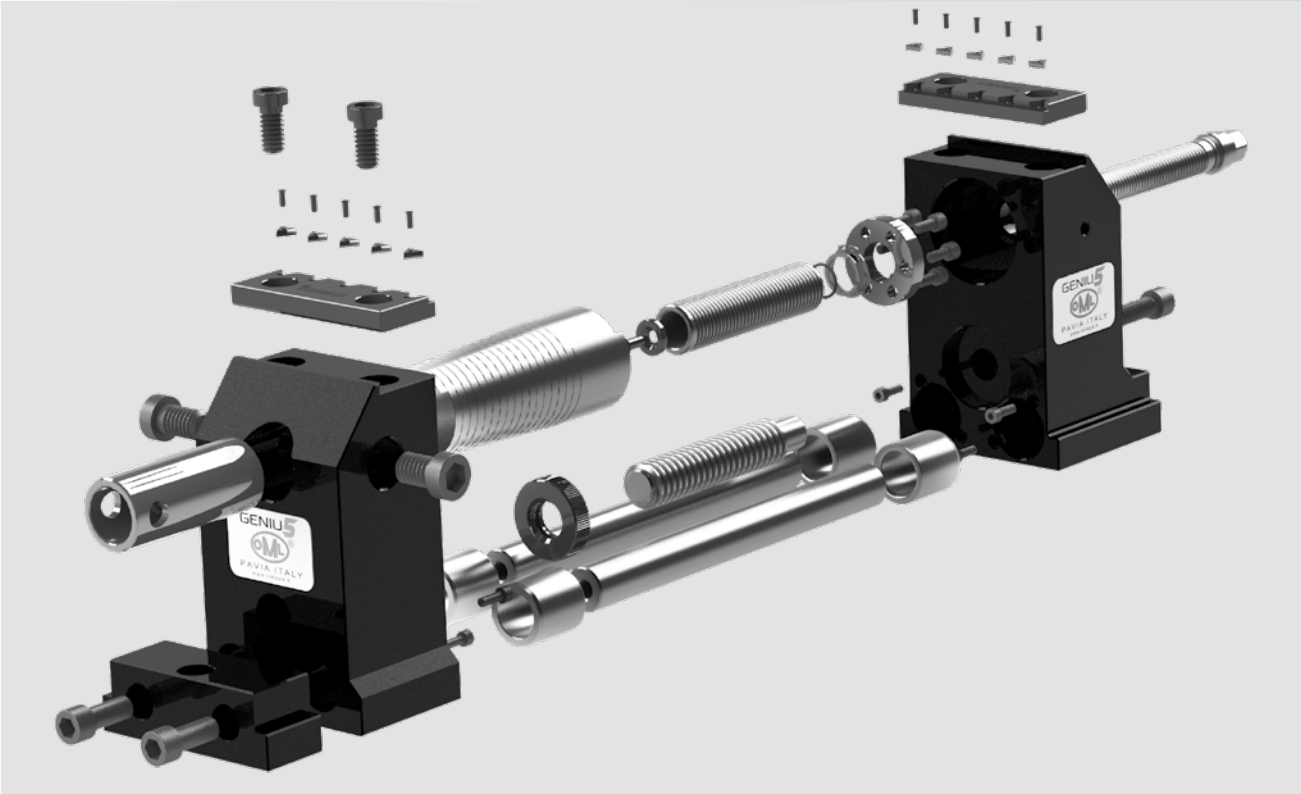
GENIUS
OML
PAVIA ITALY

PAIR OF JAWS FOR SINTERGRIP

(SinterGrip inserts: see page S.17)

Id. No.
58451519

CLAMPING KEY

Id. No.
51502910

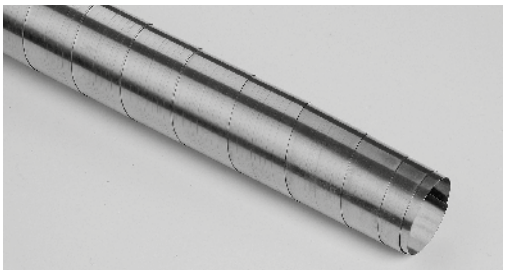

TELESCOPIC STAINLESS STEEL CARTER

Id. No.
71290218

SPINDLE GROUP

Id. No.
77585010

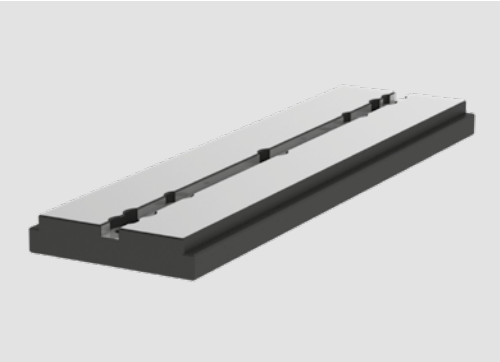

PLATE FOR VISE GENIUS

Type	Id. No.	Weight (Kg)
GENIUS 100	58502010	7
GENIUS 200	(58502020)	9

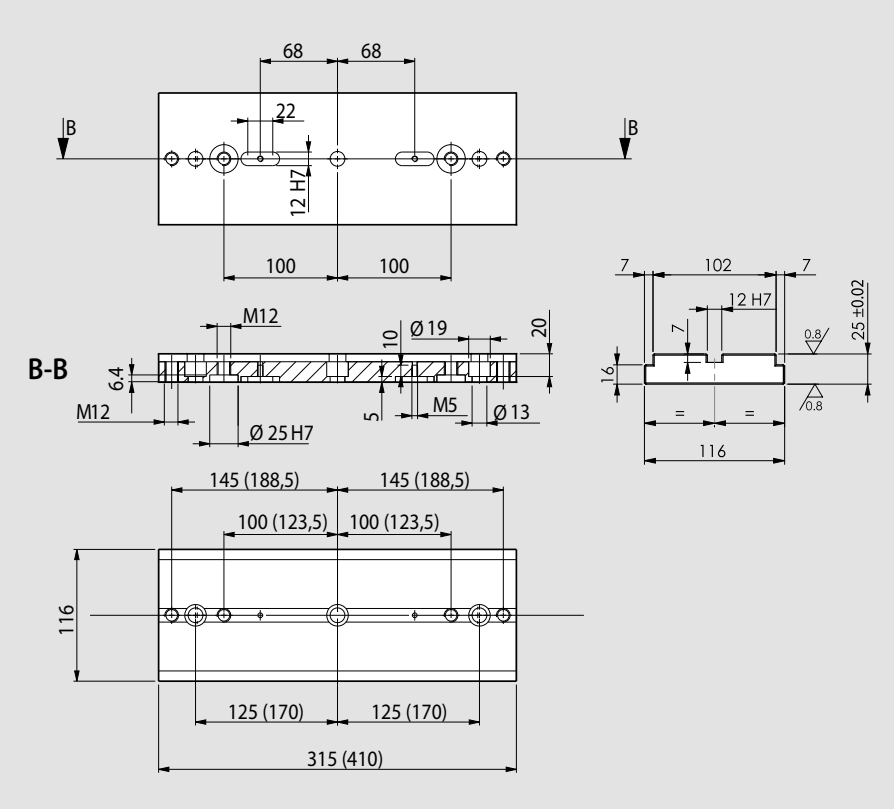

WORKING EXAMPLE

PAIR OF CLAMPS

Id. No.					
mm 12	mm 14	mm 16	mm 18	mm 20	mm 22
58012792	58012793	58012794	58012795	58012796	58012797

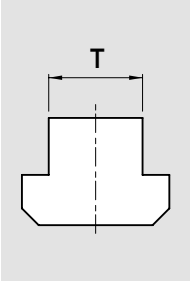

GENIUS

WORKING EXAMPLES

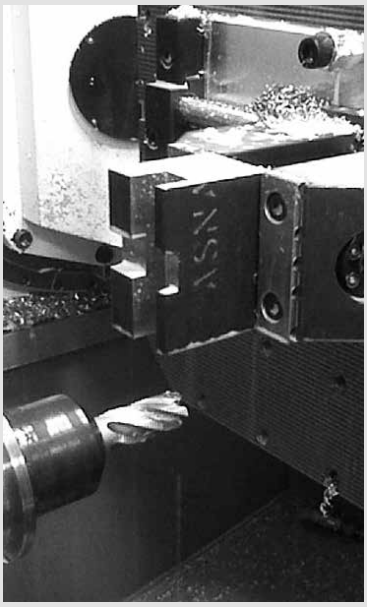

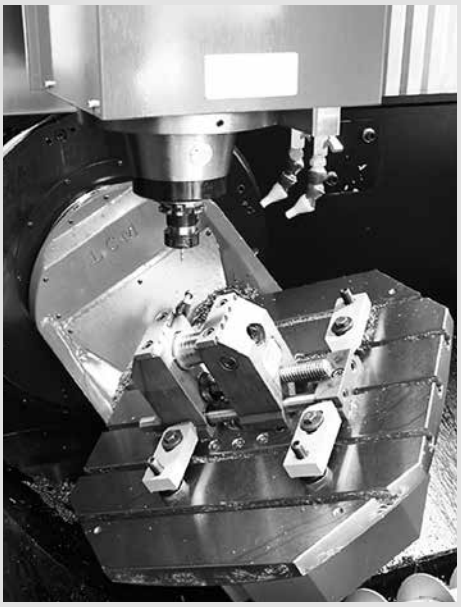

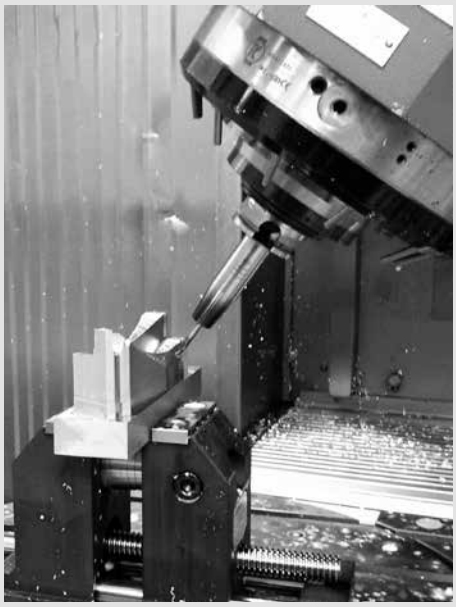

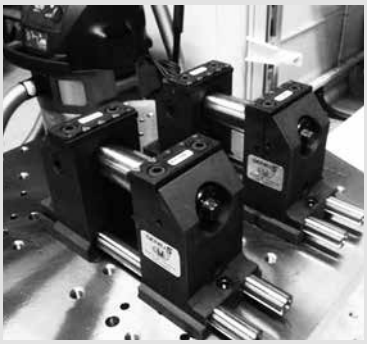

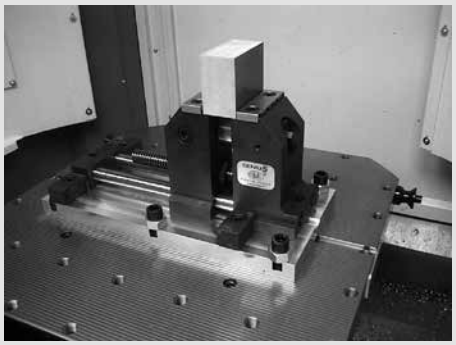

VCA

5-Axis Machine Tools

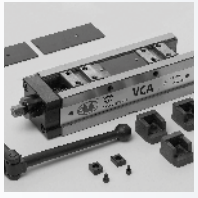

VCA
- VCA 100
- VCA 130
- VCA 160

Page 5.5.2

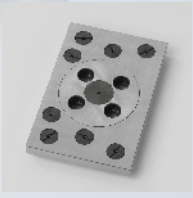

VCA
- Spare parts

Page 5.5.8

VCA
- Accessories

Page 5.5.4

VCA
- Application examples

Page 5.5.13

VCA

Mechanical self-centering clamping vise

Self-centering set base VCA

Set base Vise Power complete with:
wrench
cover for the protection of the screw
2 positioning keys with screw
4 clamps

Type for	Id. No.
VCA 100	77589070
VCA 130	77589170
VCA 160	77589270

"L" jaw kit

Type for	Id. No.
VCA 100	58907120
VCA 130	58917120
VCA 160	58927120

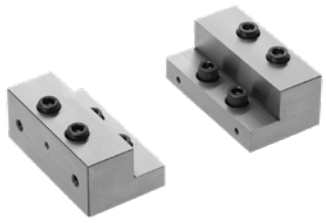

Square block jaw kit

Type for	Id. No.
VCA 100	58907220
VCA 130	58917220
VCA 160	58927220

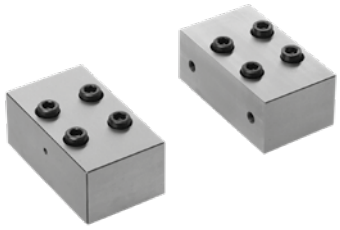

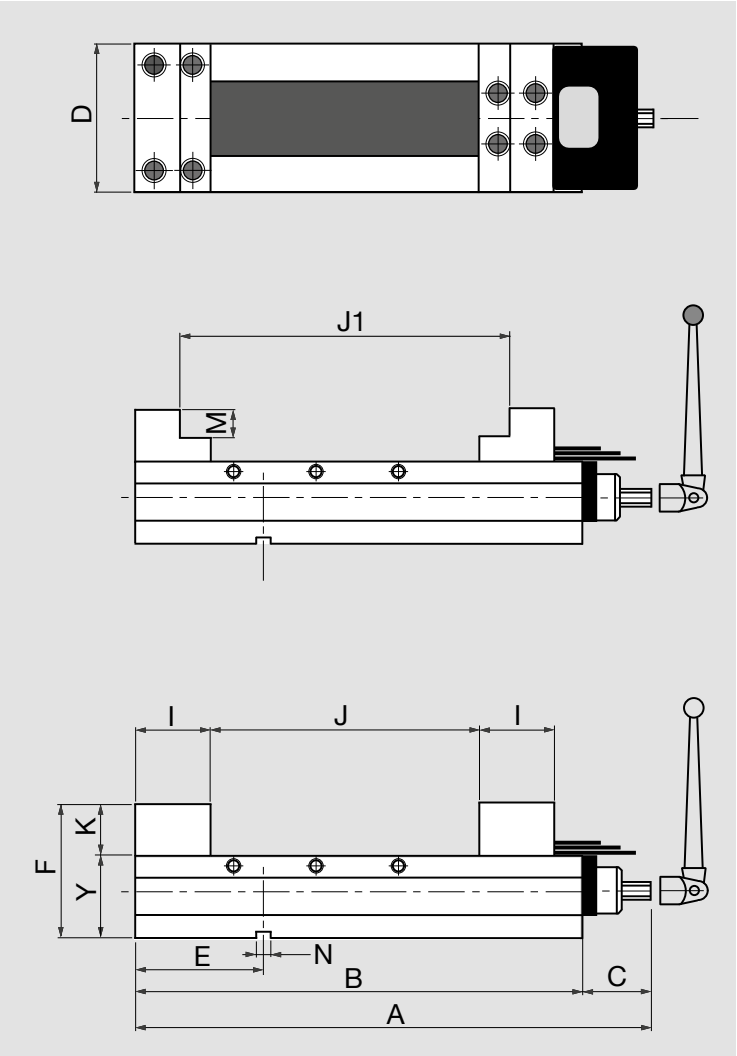

Type	A mm	B mm	C mm	D mm	E mm	F mm	J mm min	J mm max	J1 mm min	J1 mm max	I mm	K mm	M mm	N mm	X mm	Y mm	Max clamping force KN (kgf)	Weight Kg
VCA 100	378	300		101	150	130	40	165	40	220	64	45	25		45	85	20 (2.000)	22
VCA 130	488	410	78	131	205	147	40	250	40	320	74	52	30	18	65	95	23 (2.300)	40
VCA 160	553	475		161	237,5	160	40	290	40	370	86	55	30		65	105	24 (2.400)	60

Self-centering set base VCA

Set base Vise Power complete with:
wrench
cover for the protection of the screw
2 positioning keys with screw
4 clamps

Type for	Id. No.
VCA 100	77589070
VCA 130	77589170
VCA 160	77589270

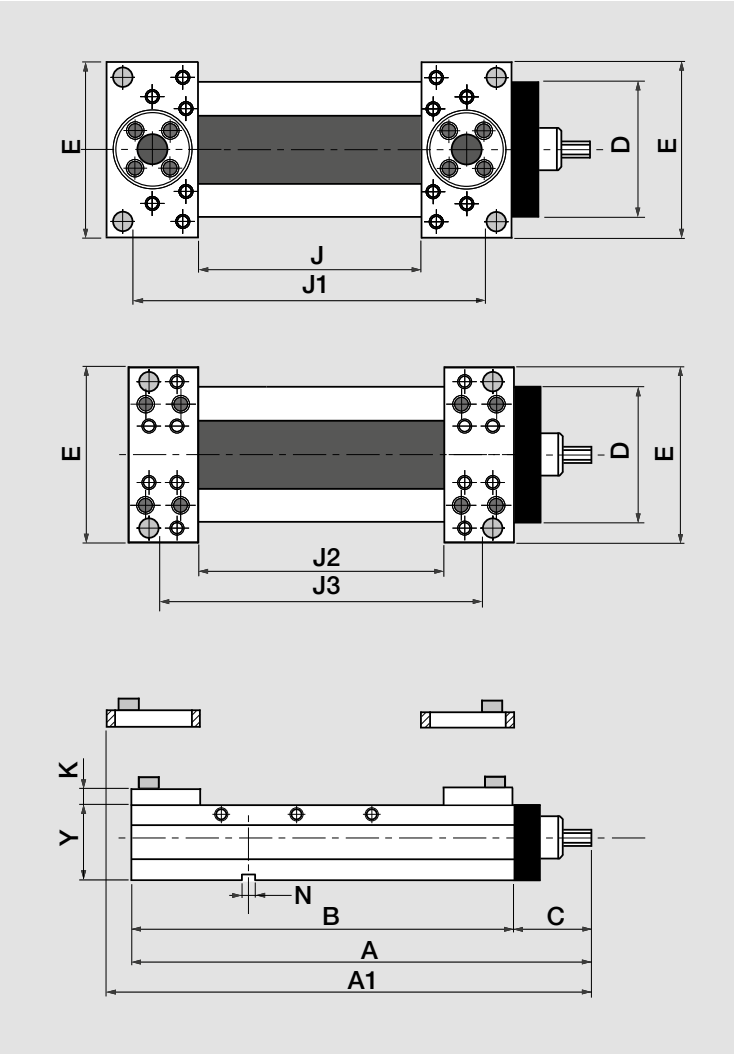

Gripper jaw kit

Type for	Id. No.
VCA 100	58907330
VCA 130	58917330
VCA 160	58927330

Floating gripper jaw kit

Type for	Id. No.
VCA 100	58907340
VCA 130	58917340
VCA 160	58927340

Type	A mm	A1 mm	B mm	C mm	D mm	E mm	J mm min	J mm max	J1 mm	J2 mm min	J2 mm max	J3 mm	K mm	N mm	Y mm	Max clamping force KN (kgf)	Weight Kg
VCA 100	378	397	300		101	160	5	122	270	40	170	230			85	20 (2.000)	19
VCA 130	488	513	410	78	131	190	5	205	377	30	255	340	22	18	95	23 (2.300)	34
VCA 160	553	584	475		161	220	11	230	450	40	295	390			105	24 (2.400)	53

Set of 4 grippers h11 smooth

Id. No.
58906114

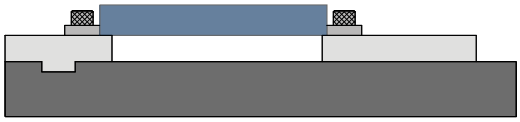

Set of 4 grippers h11 serrated

Id. No.
58906124

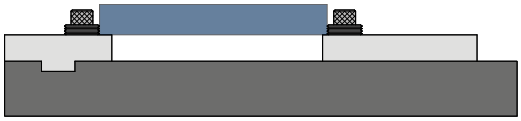

Set of 4 grippers h19 smooth

Id. No.
58906214

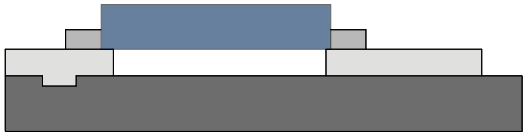

Set of 4 grippers h19 serrated

Id. No.
58906224

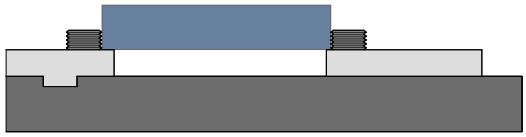

Set of 4 grippers h24 smooth

Id. No.
58906314

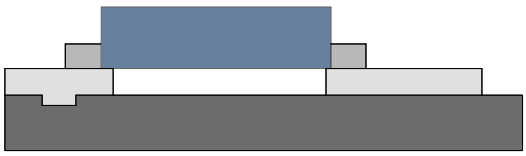

Set of 4 grippers h24 serrated

Id. No.
58906324

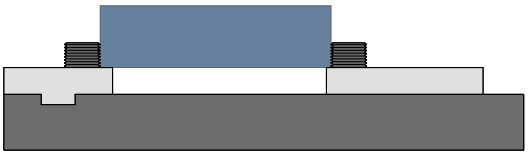

Set of 4 grippers h11 smooth-serrated

Id. No.
58906414

Set of 4 soft grippers h25 smooth

Id. No.
58906514

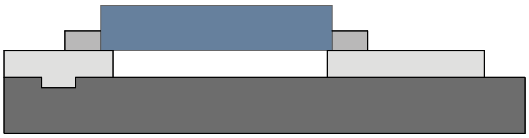

Set of 4 grippers h50 serrated with adjustable screw

Id. No.
58906724

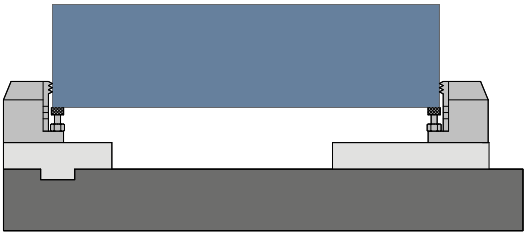

Set of 4 grippers h50 smooth with step

Id. No.
58906814

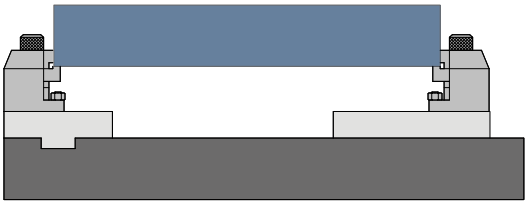

Set of 4 grippers h50 serrated with step

Id. No.
58906824

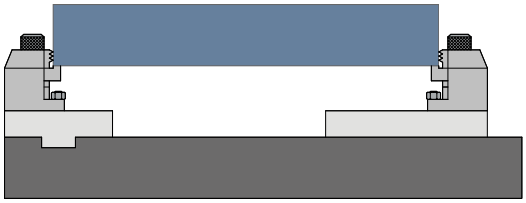

Set of 4 grippers h25 smooth with adjustable screw

Id. No.
58906614

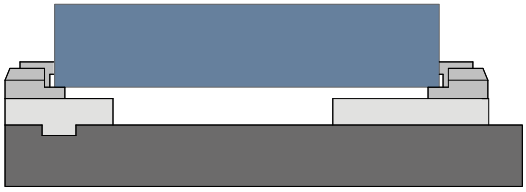

Set of 4 grippers h25 serrated with adjustable screw

Id. No.
58906624

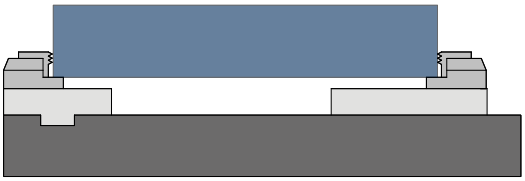

Set of 4 grippers h50 smooth with adjustable screw

Id. No.
58906714

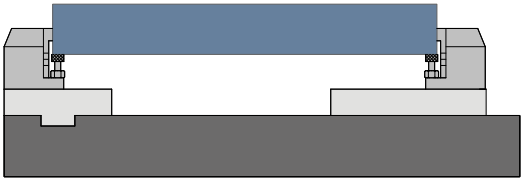

Moveable square block jaw (with expanding chip cover)

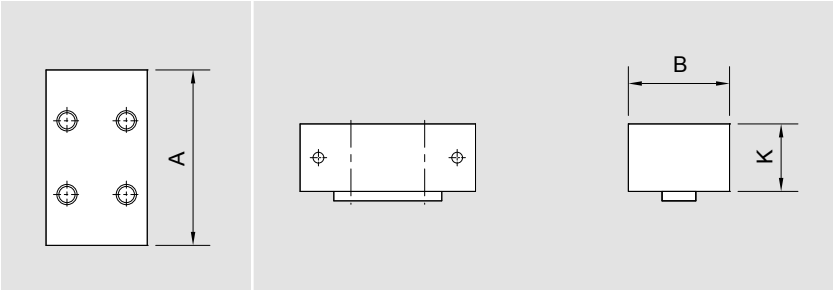

Id. No.	Type	A mm	B mm	K mm	Weight Kg
58900320	100	100	64	45	2,5
58910320	130	130	74	52	4,5
58920320	160	160	86	55	6

Moveable jaw " L" type (with expanding chip cover)

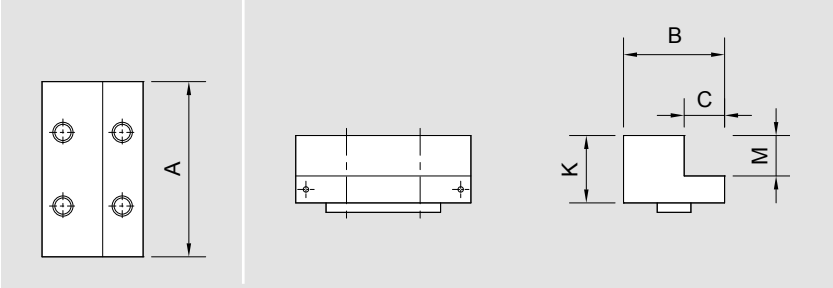

Id. No.	Type	A mm	B mm	C mm	K mm	M mm	Weight Kg
58900310	100	100	64	26	45	25	1,5
58910310	130	130	74	30	52	30	2,8
58920310	160	160	86	35	55	30	4,2

Moveable jaw gripper

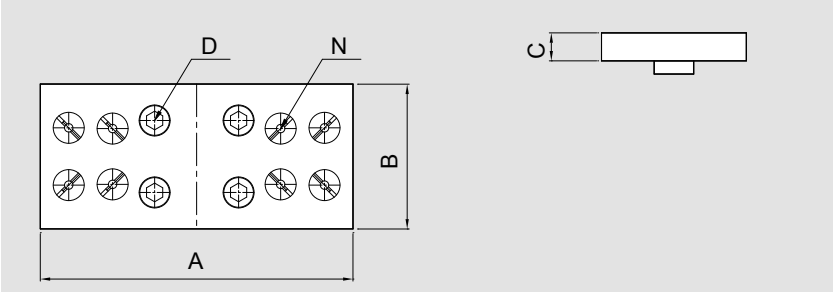

Id. No.	Type	A mm	B mm	C mm	D mm	N	Weight Kg
58900330	100	160	64	22	M10x25L	6	1,4
58910330	130	190	88	22	M12x30L	8	2,2
58920330	160	220	88	22	M14x30L	8	3,3

Floating jaw gripper

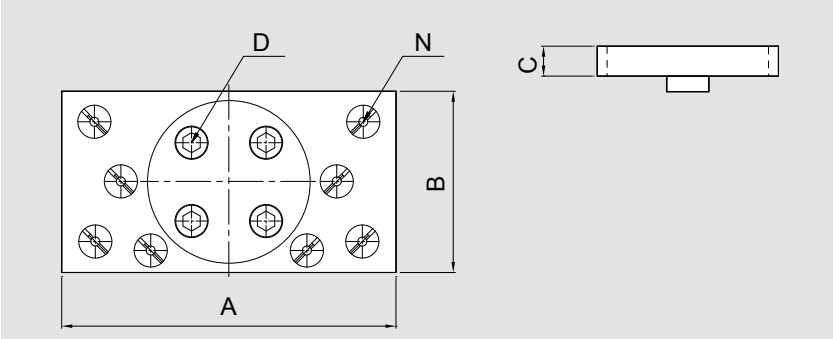

Id. No.	Type	A mm	B mm	C mm	D mm	N	Weight Kg
58900340	VCP 100	160	88	22	M10x25L	6	2,2
58910340	VCP 130	190	103	22	M12x30L	8	3,2
58920340	VCP 160	220	128	22	M14x30L	8	5,7

Gripper h11 smooth

Id. No.
58906110

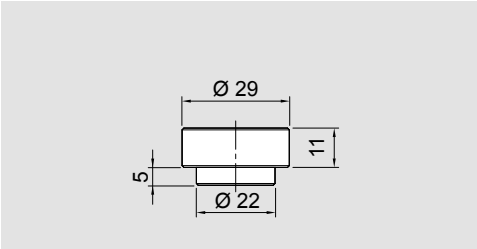

Gripper h11 serrated

Id. No.
58906120

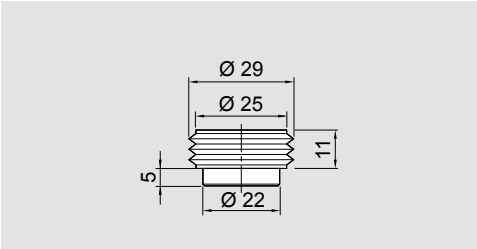

Gripper h19 smooth

Id. No.
58906210

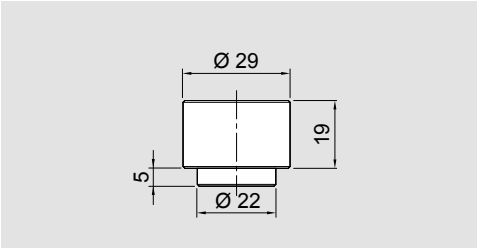

Gripper h19 serrated

Id. No.
58906220

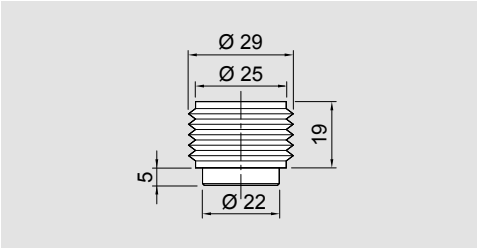

Gripper h24 smooth

Id. No.
58906310

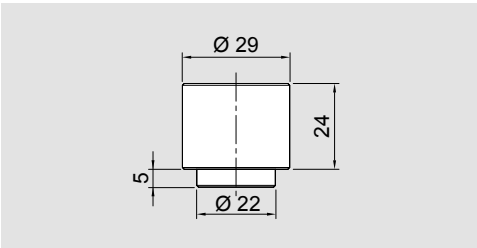

Gripper h24 serrated

Id. No.
58906320

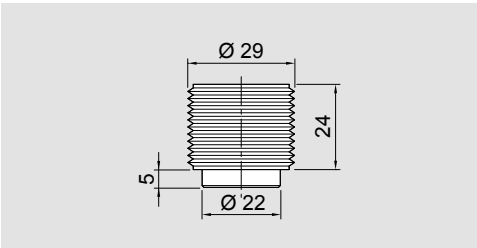

Gripper h11 smooth-serrated

Id. No.
58906410

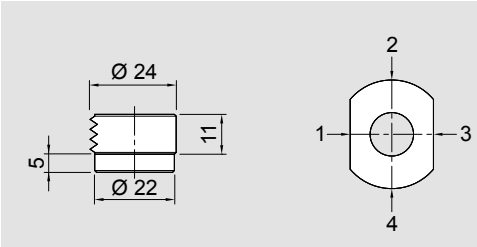

Soft gripper h25 smooth

Id. No.
58906510

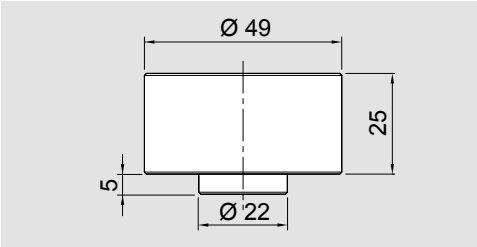

Gripper h50 serrated with adjustable screw

Id. No.
58906720

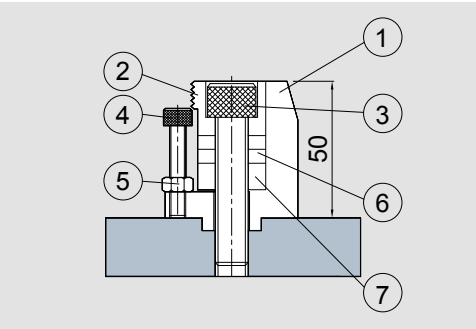

Pos.	Id. No.	Description
1	58905120	Body
2	58905220	Serrated gripper
3	71113109	Screw TCEI M12x60 12.9
4	71113047	Screw TCEI M6x30 12.9
5	71150206	Nut M6
6	58905410	Washer (5 mm)
7	58905420	Washer (10 mm)

Gripper h50 smooth with step

Id. No.
58906810

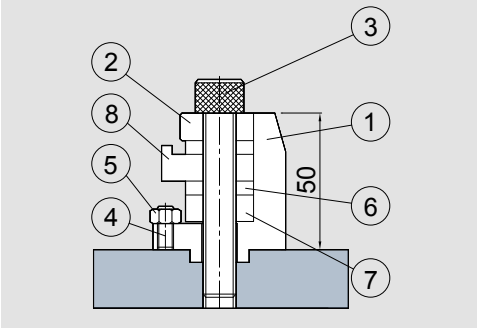

Pos.	Id. No.	Description
1	58905120	Body
2	58905310	Smooth gripper
3	71113110	Screw TCEI M12x70 12.9
4	71112124	Grub screw M6x16
5	71150206	Nut M6
6	58905410	Washer (5 mm)
7	58905420	Washer (10 mm)
8	58905510	Step washer

1

2

3

4

5

6

7

8

Gripper h50 serrated with step

Id. No.
58906820

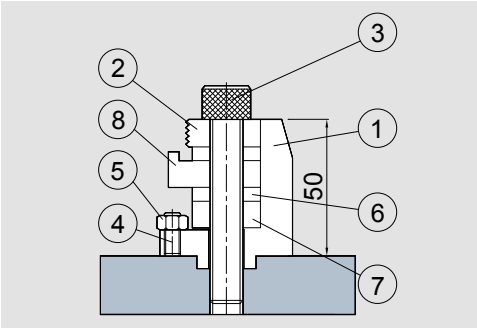

Pos.	Id. No.	Description
1	58905120	Body
2	58905320	Serrated gripper
3	71113110	Screw TCEI M12x70 12.9
4	71112124	Grub screw M6x16
5	71150206	Nut M6
6	58905410	Washer (5 mm)
7	58905420	Washer (10 mm)
8	58905510	Step washer

1

2

3

4

5

6

7

8

Gripper h25 smooth with adjustable screw

Id. No.
58906610

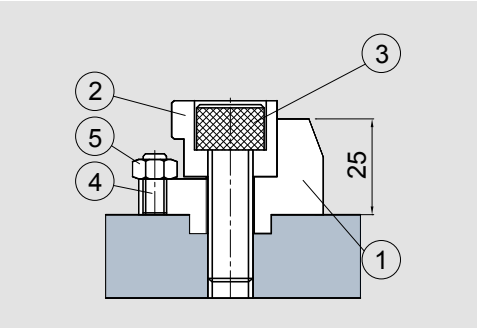

Pos.	Id. No.	Description
1	58905120	Body
2	58905210	Smooth gripper
3	71113105	Screw TCEI M12x3512.9
4	71112124	Grub screw M6x16
5	71150206	Nut M6

1

2

3

4

5

Gripper h25 serrated with adjustable screw

Id. No.
58906620

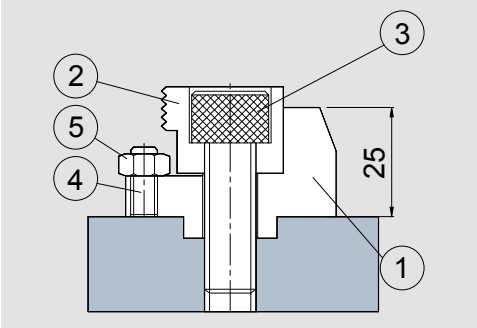

Pos.	Id. No.	Description
1	58905110	Body
2	58905220	Serrated gripper
3	71113105	Screw TCEI M12x35 12.9
4	71112124	Grub screw M6x16
5	71150206	Nut M6

1

2

3

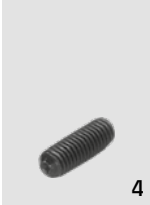
4

5

Gripper h50 smooth with adjustable screw

Id. No.
58906710

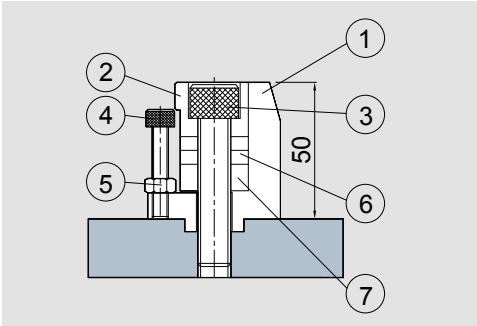

Pos.	Id. No.	Description
1	58905120	Body
2	58905210	Smooth gripper
3	71113109	Screw TCEI M12x60 12.9
4	71113047	Screw TCEI M6x16
5	71150206	Nut M6
6	58905410	Washer (5 mm)
7	58905420	Washer (10 mm)

1

2

3

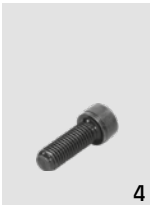
4

5

6

7

Pair of positioning keys

Id. No.	mm
58901392	18 x 12
58901393	18 x 14
58901394	18 x 16
58901395	18 x 18
58901396	18 x 20
58901397	18 x 22

Kit of 4 clamps

Id. No.	for type
58902709	VCP 100 - VP 100
	VCP 130 - VP 130
	VCP 160 - VP 160

Wrench VCM/VCA

Id. No.	for type
58901910	VCM 100 - VCA 100
	VCM 130 - VCA 130
	VCM 160 - VCA 160

Torque wrench

Id. No.	for type
51501010	VCM 100 - VCA 100
	VCM 130 - VCA 130
	VCM 160 - VCA 160

Repeatability accuracy for the clamping of model VCA ±0,01

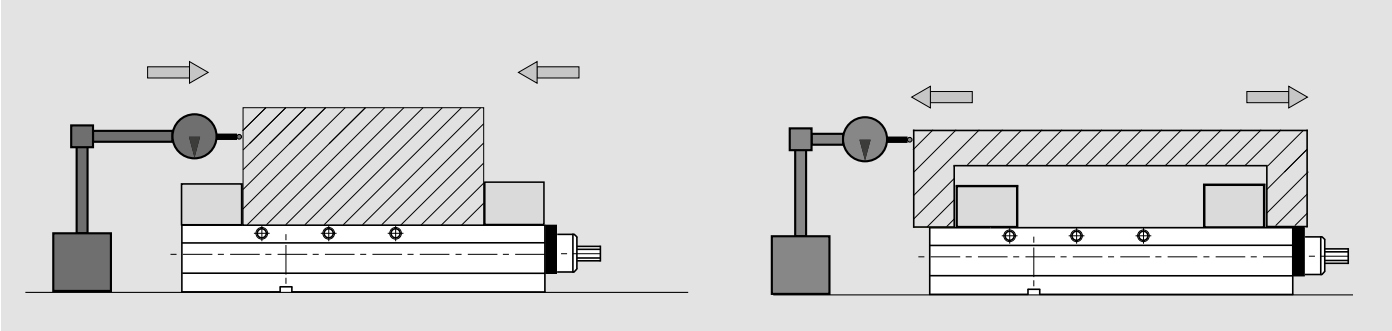

Clamping force diagrams VCA without clamping force multiplier

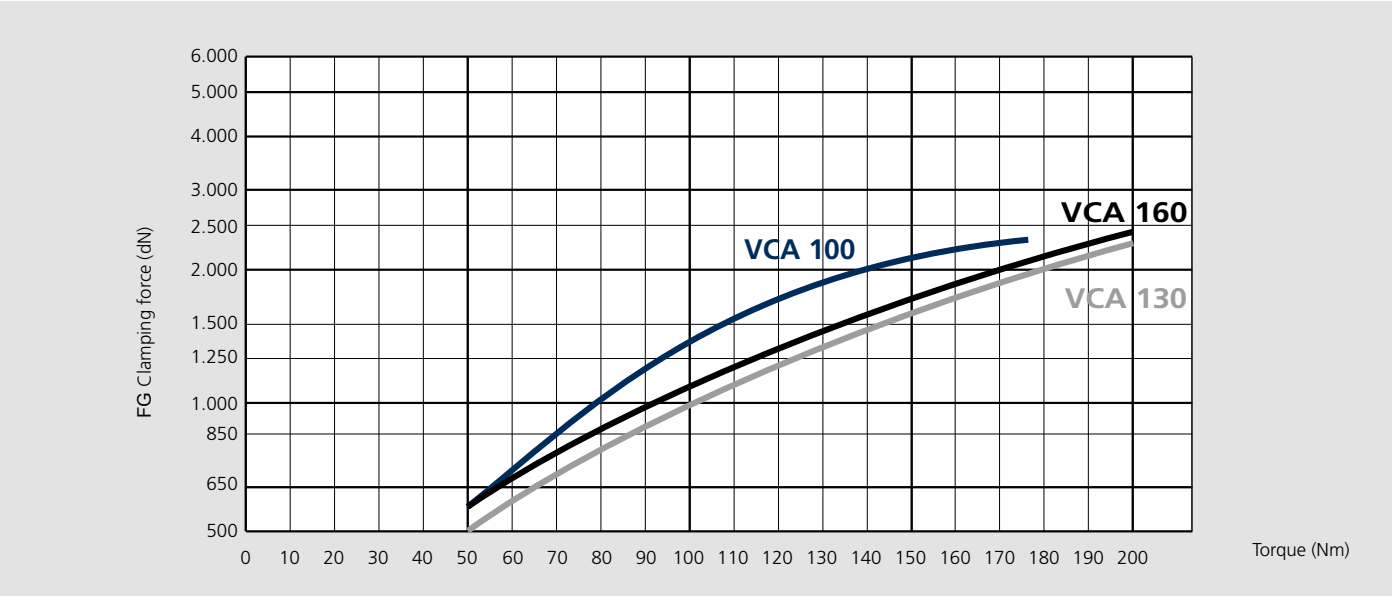

Possible configurations of vices “SELF CENTERING“

With block jaws

With L jaws

With gripper jaws

With floating gripper jaws

VCA

5-Axis Machine Tools

CIVI SinterGrip

Multiple clamping system

CIVI-S 60
CIVI-S 90

Jaw

- Self-centering
- Double Clamping
- Fixed

Page 6.1.**2**

CIVI SINTERGRIP

- Parallels

Page 6.1.**5**

CIVI SINTERGRIP

- Movable jaw set
- Fixed jaw set

Page 6.1.**3**

Accessories

Page 6.1.**6**

CIVI-S 60
CIVI-S 90

Multiple clamping system

CIVI-S is a new interesting modular Multi-Clamping system that reduces downtime and maximizes machine tool productivity

Complete base set with:

1 base (length optional), 1 fixed support, n. 2 (CIVI-S 60) or n. 3 (CIVI-S 90) SinterGrip inserts STD for steel*, 1 pair of positioning keys, 1 t-wrench

* On request inserts for ALU or HRC

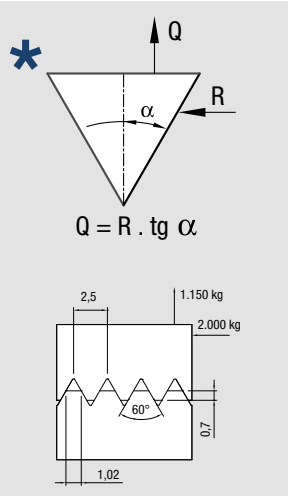

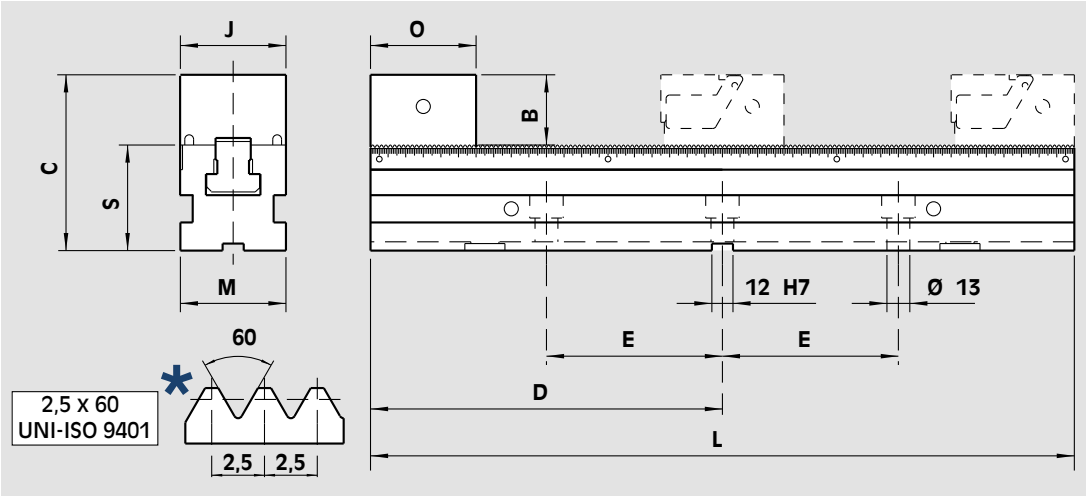

For type	Id. No.	B mm	C mm	D mm	E mm	J mm	L mm	M mm	O mm	S ±0.01 mm	Weight kg
CV-S 60-250	77584664	40	100	125	100	60	250	60	60	60	6.5
CV-S 60-400	77584661			200	100		400				9.5
CV-S 60-500	77584662			250	150		500				11.5
CV-S 60-630	77584663			315	200		630				13.5
CV-S 90-250	77584694	45	115	125	100	90	250	90	70	70	11
CV-S 90-400	77584691			200	100		400				16
CV-S 90-500	77584692			250	150		500				19.5
CV-S 90-630	77584693			315	200		630				23.5

Movable jaw set J60

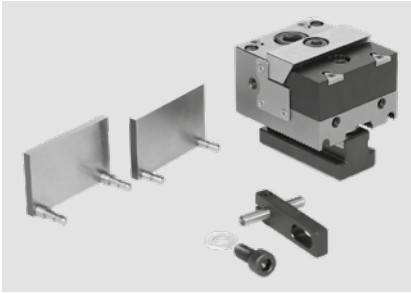

* On request for ALU or HRC

Complete with 1 work stop, n. 4 SinterGrip inserts STD for steel*, n. 1 pair of parallels H37.

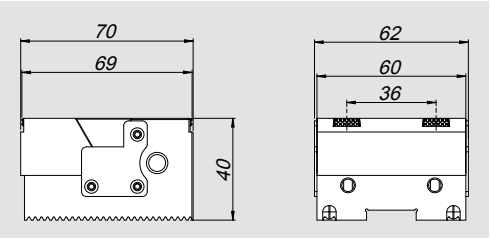

Id. No.	For type	Weight
		Kg
77 58 46 60	CIVI-S / 60 x ...	1,4

Movable jaw set J90

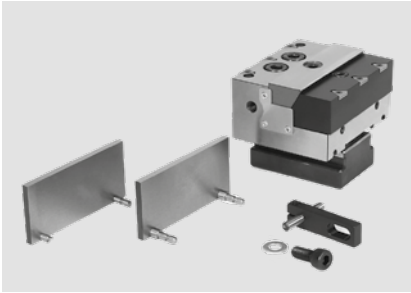

* On request for ALU or HRC

Complete with 1 work stop, n. 6 SinterGrip inserts STD for steel*, n. 1 pair of parallels H42.

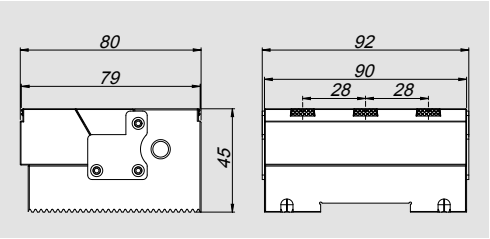

Id. No.	For type	Weight
		Kg
77 58 46 90	CIVI-S / 90 x ...	2,9

Fixed jaw set J60

* On request for ALU or HRC

Complete with 1 work stop, n. 2 SinterGrip inserts STD for steel*.

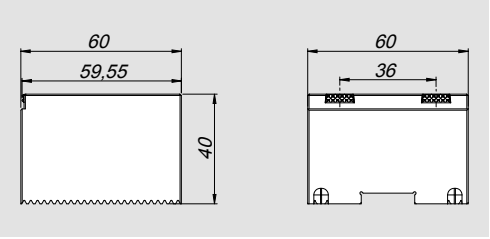

Id. No.	For type	Weight
		Kg
58 46 72 60	CIVI-S / 60 x ...	1,4

Fixed jaw set J90

* On request for ALU or HRC

Complete with 1 work stop, n. 3 SinterGrip inserts STD for steel*.

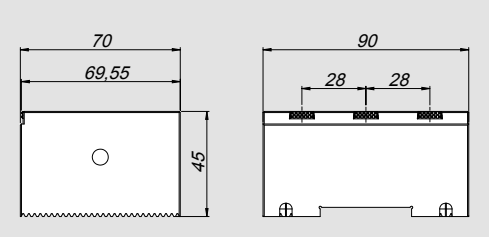

Id. No.	For type	Weight
		Kg
58 46 72 90	CIVI-S / 90 x ...	2,9

Working example

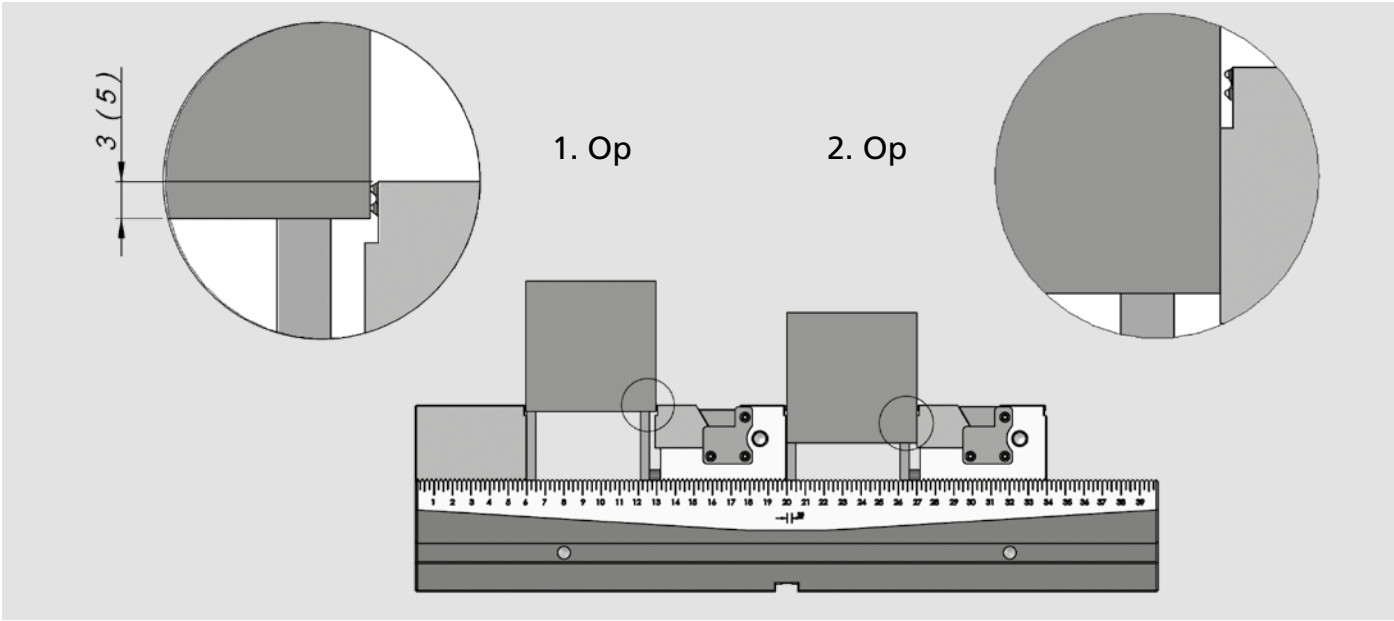

Clamping capacity

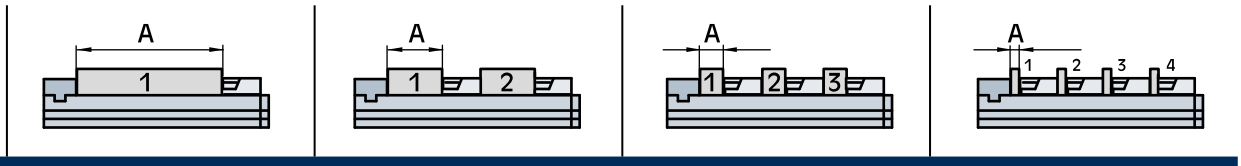

	A max. mm			
CV-S 60-250	120	25	-	-
CV-S 60-400	270	100	43	15
CV-S 60-500	370	150	76	40
CV-S 60-630	500	215	120	73
CV-S 90-250	99	-	-	-
CV-S 90-400	249	84	29	-
CV-S 90-500	349	134	62	26
CV-S 90-630	479	199	106	59

Clamping forces diagram

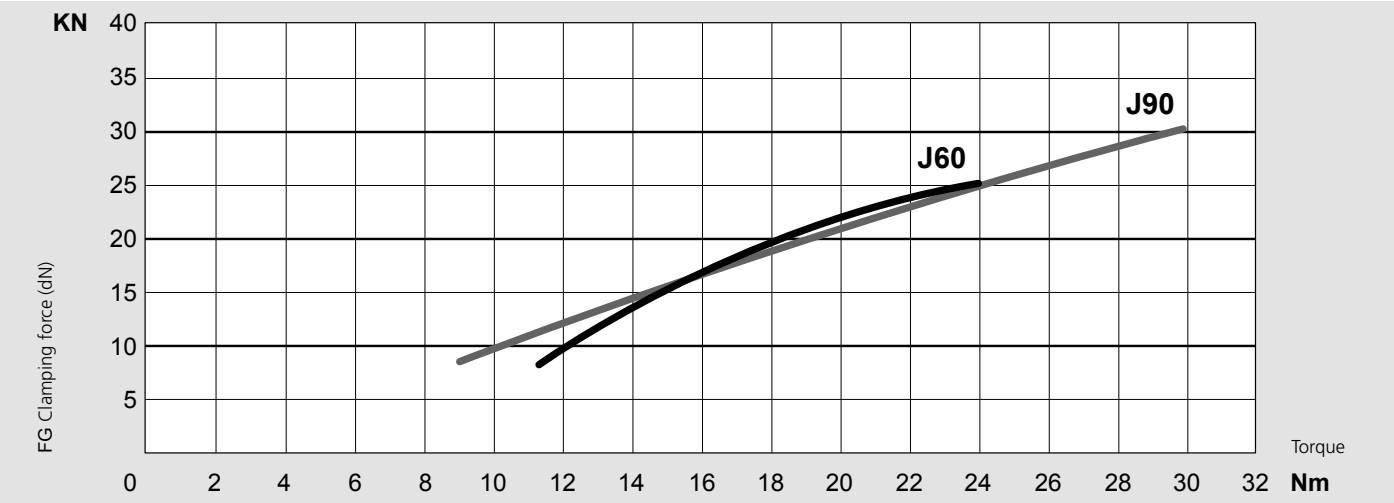

Parallels for CIVI-S

The exclusive and proven CLAK SYSTEM, for the quick replacement of parallels and jaws has been applied for use with the CIVI 2000 equipment with a new patent.
This equipment offers:
a) The quick replacement of parallels and jaws
b) The elimination of clamps and locks thanks to the patented selflocking system
c) The increase in accuracy
All components are heat treated and precision ground.

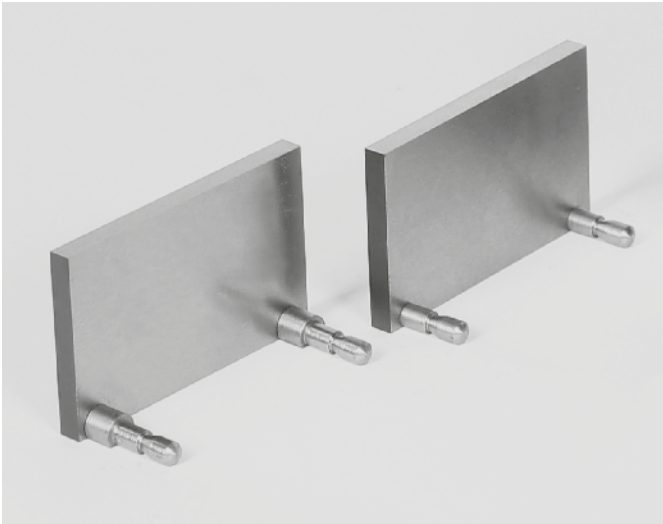

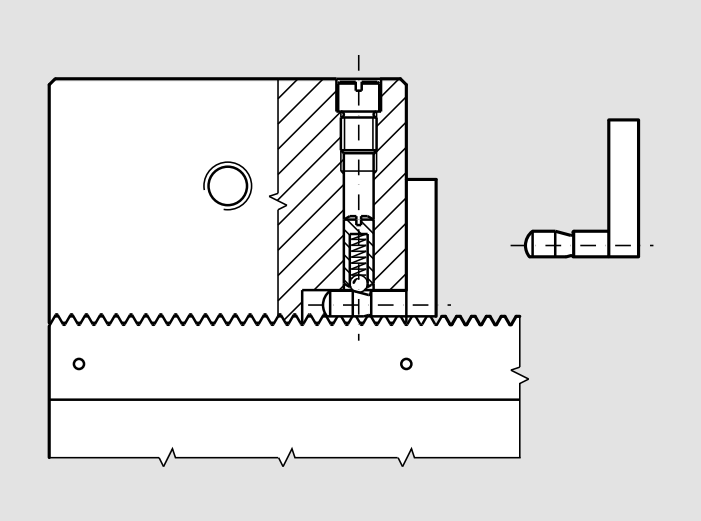

Set of 4 pair of parallels CLAK SYSTEM

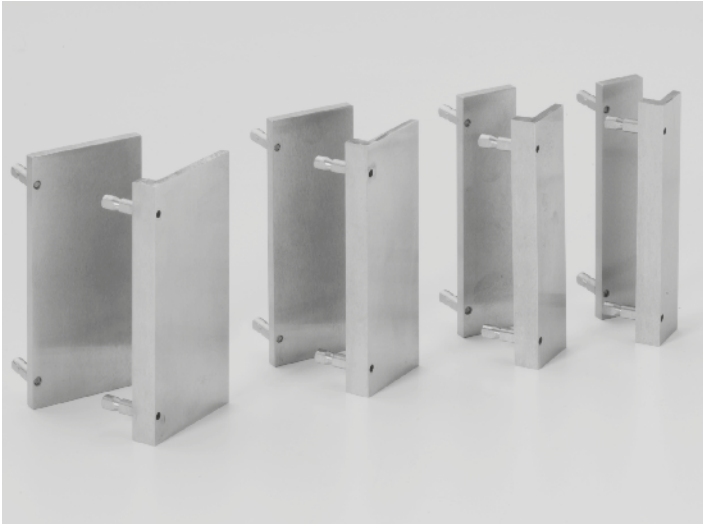

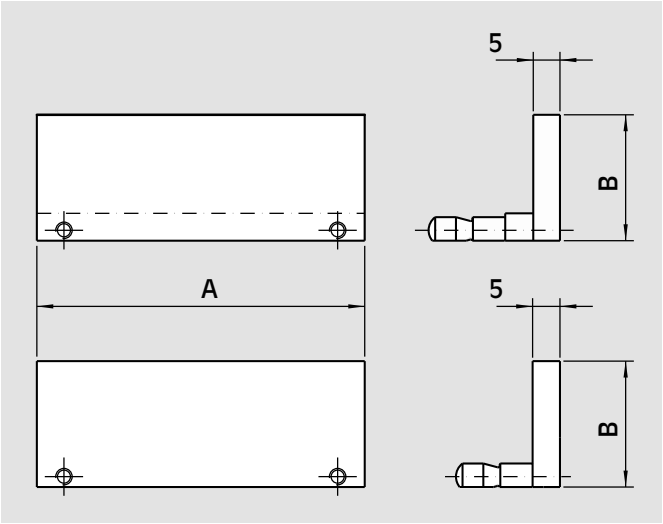

Id. No	For type	A	B				Weight
		mm	mm	mm	mm	mm	Kg
58 46 92 64	CIVI-S / 60 x ...	60	18	23	28	35	0,49
58 46 92 94	CIVI-S / 90 x ...	90	18	23	33	40	0,77

Sintergrip jaws

Id. No.	For type
58 46 04 69	CIVI-S / 60 x ...
58 46 04 99	CIVI-S / 90 x ...

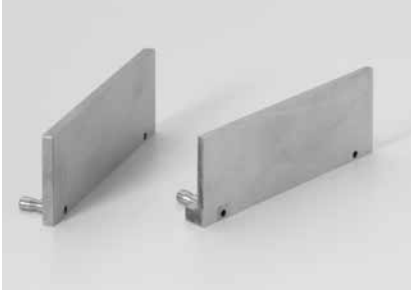

Pair of parallels CLAK SYSTEM

Id. No.	For type	B
		mm
58 41 35 18	CIVI-S / 60 x ...	18
58 41 35 23	CIVI-S / 60 x ...	23
58 41 35 28	CIVI-S / 60 x ...	28
58 41 35 35	CIVI-S / 60 x ...	35
58 42 35 18	CIVI-S / 90 x ...	18
58 42 35 23	CIVI-S / 90 x ...	23
58 42 35 33	CIVI-S / 90 x ...	33
58 42 35 40	CIVI-S / 90 x ...	40

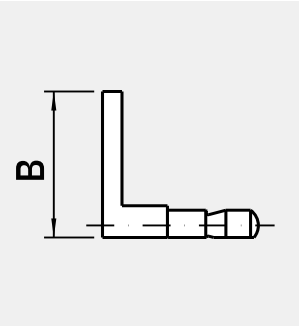

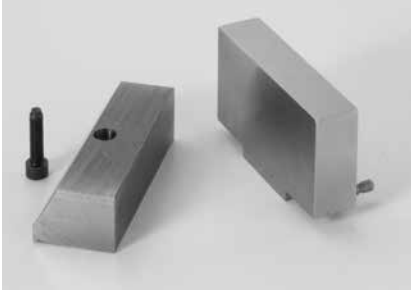

Pair of soft aluminium jaws CLAK SYSTEM

Id. No.	For type	A	B	C	S	Weight
		mm	mm	mm	mm	Kg
58 41 95 49	CIVI-S / 60 x ...	60	40	15	23	0,19
58 42 95 49	CIVI-S / 90 x ...	90	45	20	25	0,40

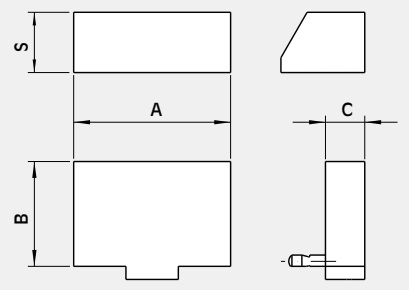

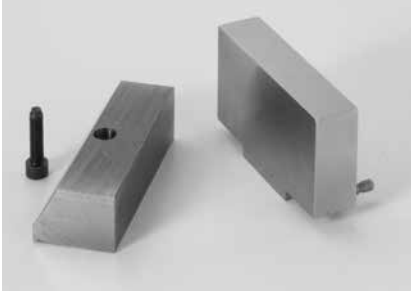

Pair of soft steel jaws CLAK SYSTEM

Id. No.	For type	A	B	C	S	Weight
		mm	mm	mm	mm	Kg
58 41 96 49	CIVI-S / 60 x ...	60	40	15	23	0,58
58 42 96 49	CIVI-S / 90 x ...	90	45	20	25	1,20

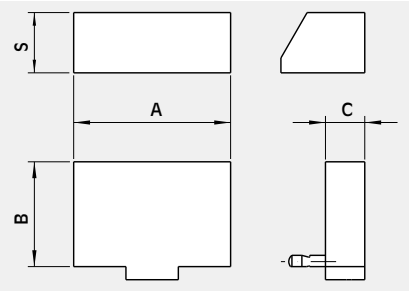

Work stop

Id. No.	Fot type	
58 31 50 10	CIVI-S / 60 x ...	for fixed support
58 32 50 10	CIVI-S / 90 x ...	for fixed support
58 31 50 20	CIVI-S / 60/90 x ...	for movable support

Pair of clamps complete with screw and T-nuts

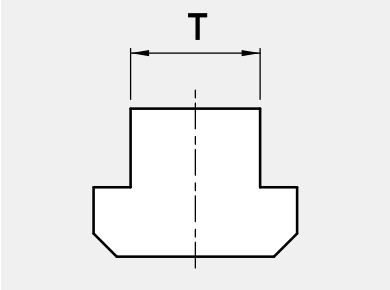

For type	Id. No.					
	mm 12	mm 14	mm 16	mm 18	mm 20	mm 22
CIVI-S / 60 x ...	**58 01 27 92**	**58 01 27 93**	**58 01 27 94**	**58 01 27 95**	**58 01 27 96**	**58 01 27 97**
CIVI-S / 90 x ...	**58 02 27 92**	**58 02 27 93**	**58 02 27 94**	**58 02 27 95**	**58 02 27 96**	**58 02 27 97**

Pair of standard positioning keys

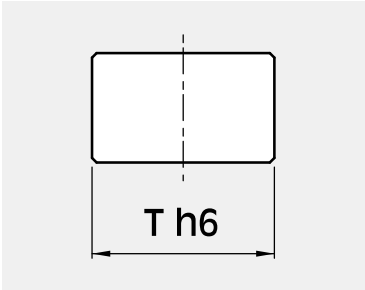

Id. No.	For type	T h6
		mm
58 01 15 92	CIVI-S / 60 x ...	12
58 01 15 92	CIVI-S / 90 x ...	12

Pair of special positioning keys

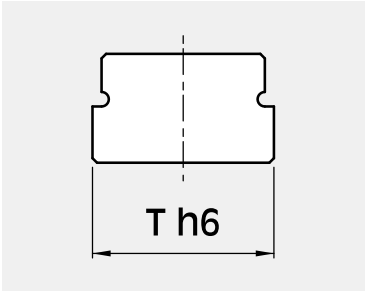

For type	Id. No.					
	mm 12 - h6	mm 14 - h6	mm 16 - h6	mm 18 - h6	mm 20 - h6	mm 22 - h6
CIVI-S / 60 x ...	-	**58 01 15 93**	**58 01 15 94**	**58 01 15 95**	**58 01 15 96**	**58 01 15 97**
CIVI-S / 90 x ...	-	**58 01 15 93**	**58 01 15 94**	**58 01 15 95**	**58 01 15 96**	**58 01 15 97**

SinterGrip

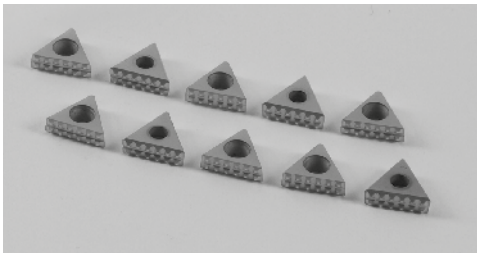
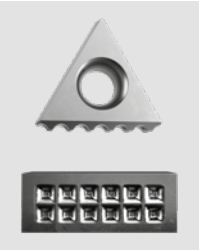

Id. No.	Description
58450119	Set of 10 SinterGrip inserts **STD** for steel

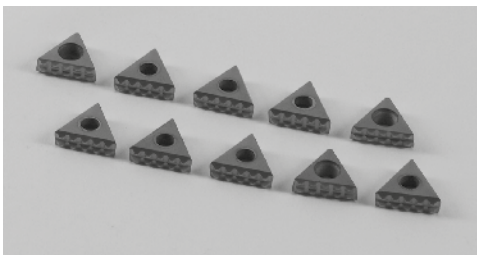
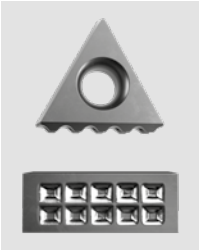

Id. No.	Description
58450129	Set of 10 SinterGrip inserts **HRC** for hardened steel / titanium until 50-54 HRC

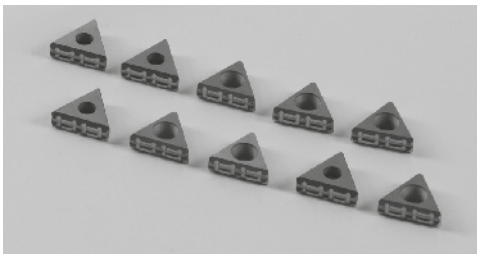
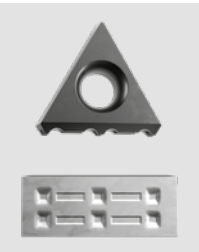

Id. No.	Description
58450139	Set of 10 SinterGrip inserts for **ALU**

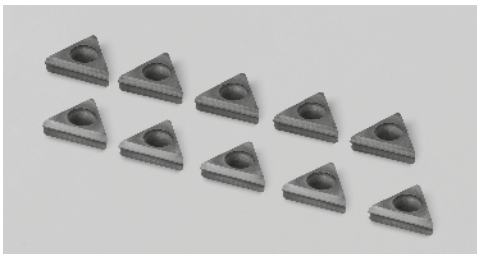

Id. No.	Description
58450149	Set of 10 SinterGrip inserts **PLM** for polymeric materials

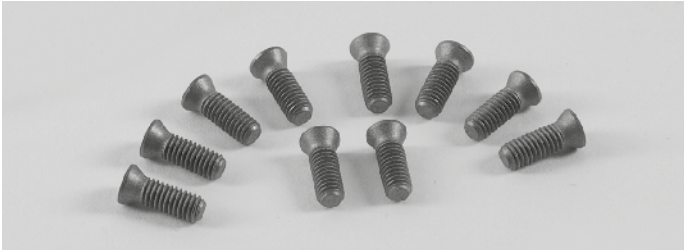

Id. No.	Description
58450219	Set 10VTX30 for inserts SINTERGRIP

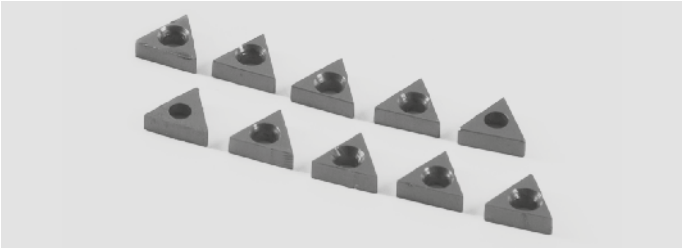

Id. No.	Description
58450519	Set 10 protection inserts in aluminum

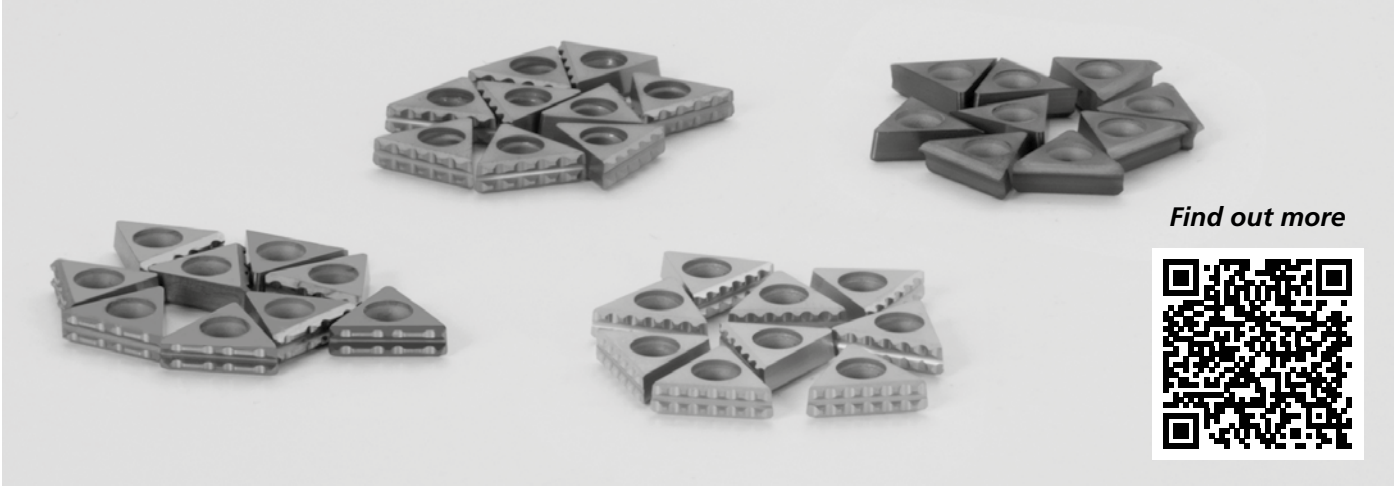

SinterGrip

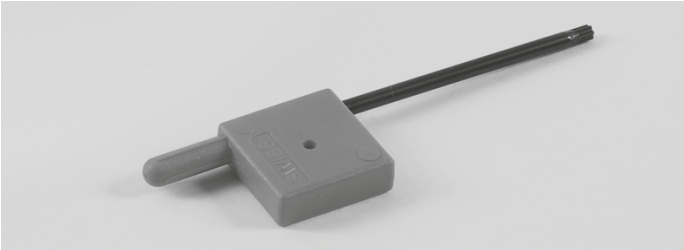

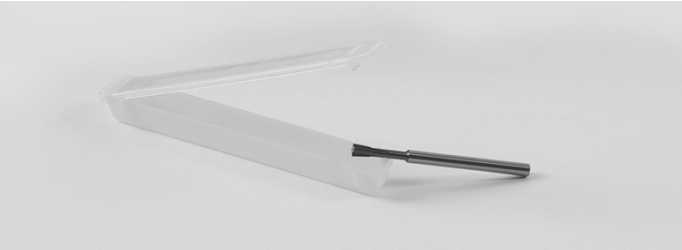

Id. No.	Description
58450320	Wrench TORX T9

Id. No.	Description
58450410	Special cutting tool D3

NOTES

CIVI 2000

Multiple clamping system

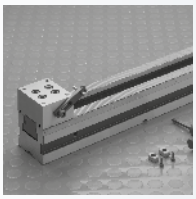

Page 6.2.4

CIVI 2000
Base set

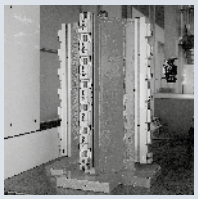

Page 6.2.13

CV-VCS

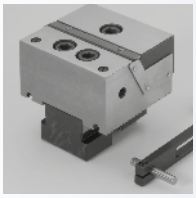

Page 6.2.5

CIVI 2000
Accessories
- Supports

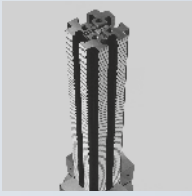

Page 6.2.16

CV-CN

Page 6.2.8

CLAK SYSTEM
Parallels for CIVI 2000

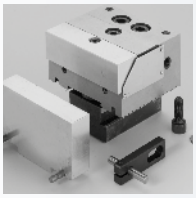

Page 6.2.9

CIVI 2000
Accessories
- Jaws

CIVI 2000
Multiple clamping system

SERRATION COMPARISON CIVI 2000 - TETRABLOK AND COMPETITION
(wedge with normal reaction to the axis without friction)

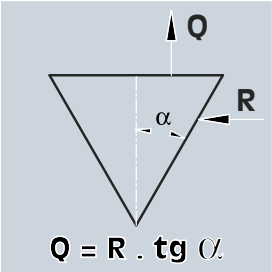

OML

CIVI 2000 pitch 2,5

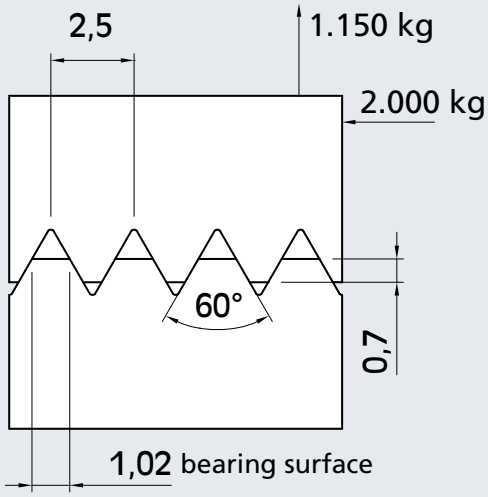

TETRABLOK pitch 2,0

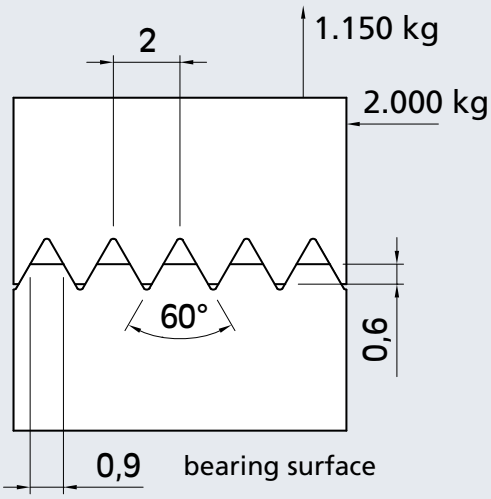

COMPETITION

pitch 1,5

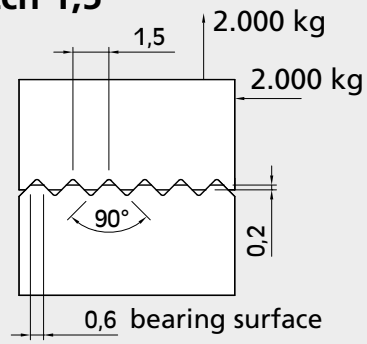

pitch 2,0

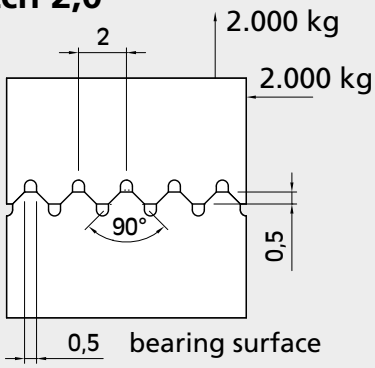

pitch 2,0

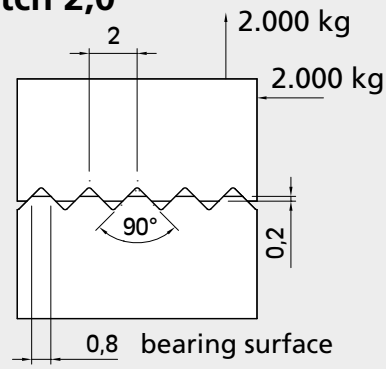

CIVI 2000
Multiple clamping system

Advantages for the user:

- Best use of the machine table
- Wide range of standard accessories
- Highest efficiency due to rapid set-up times
- Maximum flexibility: can be used for single or multi clamping on the machine table and also on tombstones
- Fully protected by covers and guards

**OML offers two different multiple clamping systems: CV with serration 2.5 x 60° and TB with serration 2.0 x 60°.
Both of these multiple clamping systems come with different jaw widths and lengths.
For the CV system, the "CLAK-SYSTEM" quick change system for jaws and parallels is available as an option.
The user can also clamp safe raw parts using jaws fitted with SinterGrip clamping inserts.**

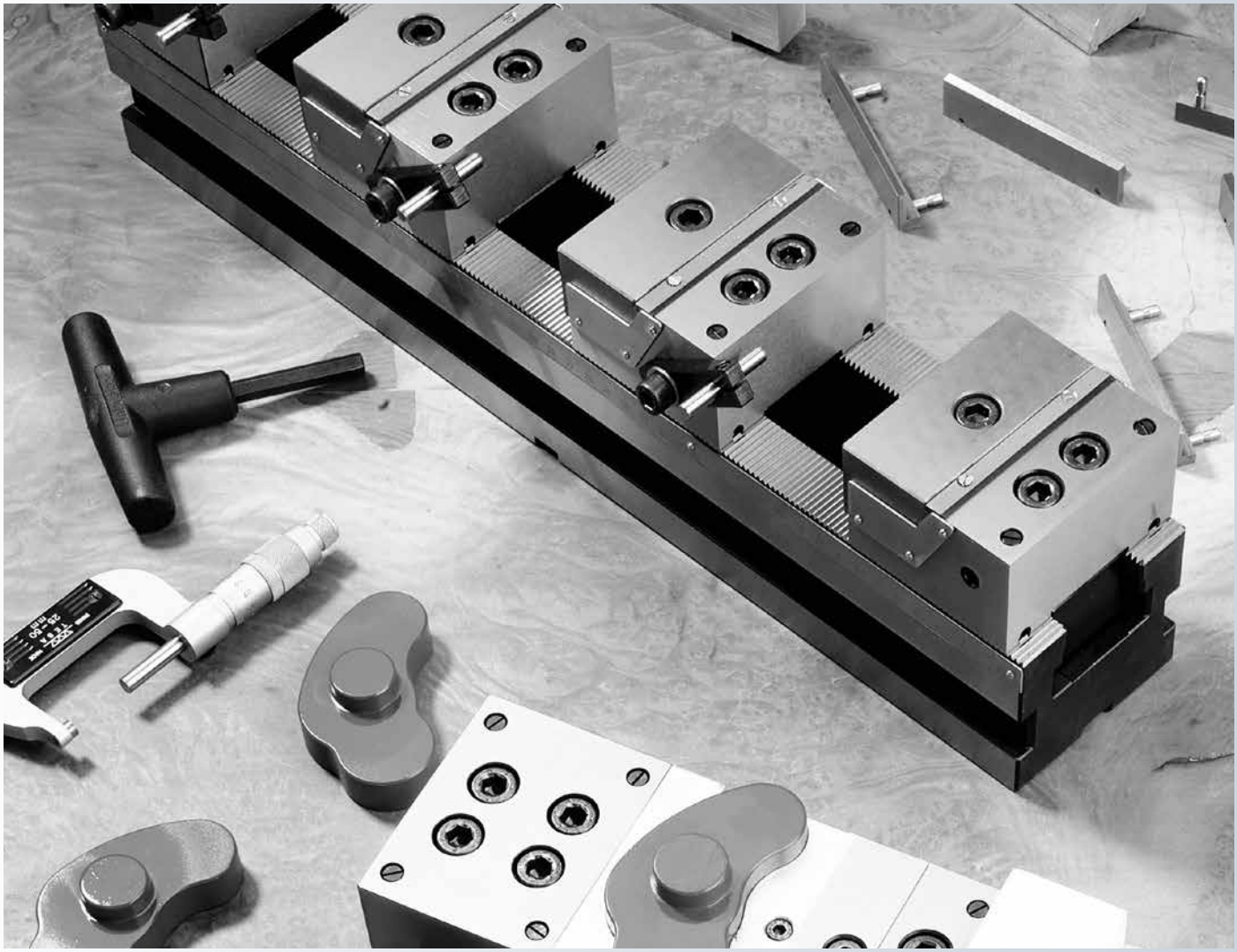

CIVI 2000

Multiple clamping system

CIVI 2000 is a new interesting modular Multi-Clamping system that reduces downtime and maximizes machine tool productivity

Complete base set with:

1 base (length optional), 1 fixed support smooth/grooved, 1 pair of positioning keys, 1 t-wrench

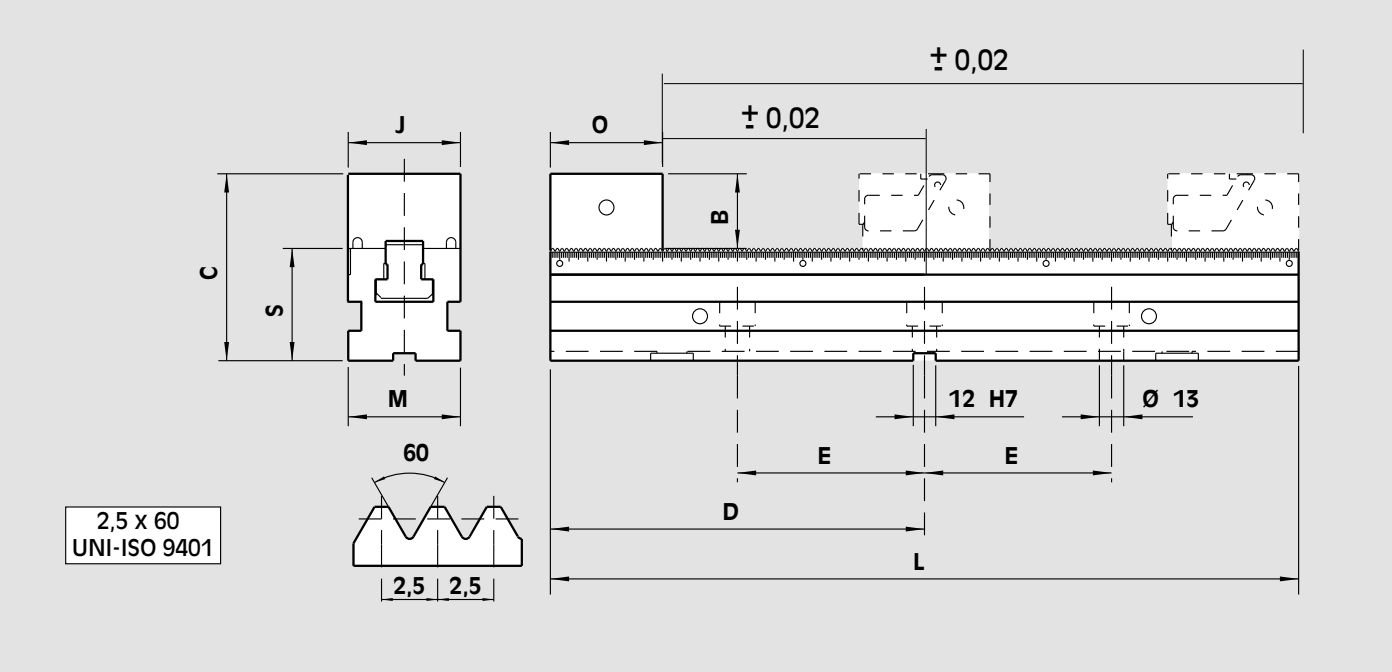

For type	Id. No.	B mm	C mm	D mm	E mm	J mm	L mm	M mm	O mm	S ±0.01 mm	Weight kg
CV 38-250	77584004	40	100	125	100	38	250	60	60	60	6
CV 38-400	77584001			200	100		400				9
CV 38-500	77584002			250	150		500				11
CV 38-630	77584003			315	200		630				13
CV 60-250	77584104	40	100	125	100	60	250	60	60	60	6.5
CV 60-400	77584101			200	100		400				9.5
CV 60-500	77584102			250	150		500				11.5
CV 60-630	77584103			315	200		630				13.5
CV 90-250	77584204	45	115	125	100	90	250	90	70	70	11
CV 90-400	77584201			200	100		400				16
CV 90-500	77584202			250	150		500				19.5
CV 90-630	77584203			315	200		630				23.5

Movable jaw set J38 smooth

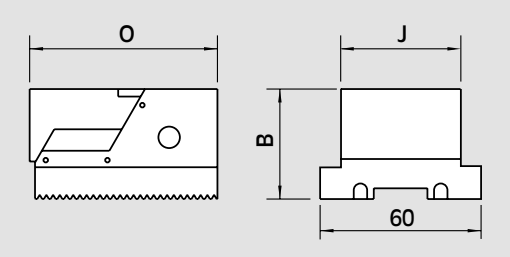

For type	Id. No.	B mm	J mm	O mm	Weight kg
CV 38	77584023	40	38	70	1

Movable jaw set J60-J90 smooth

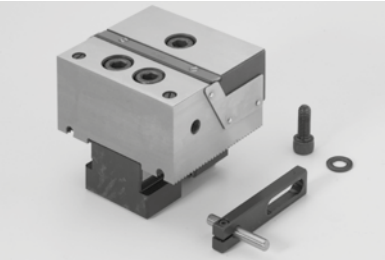

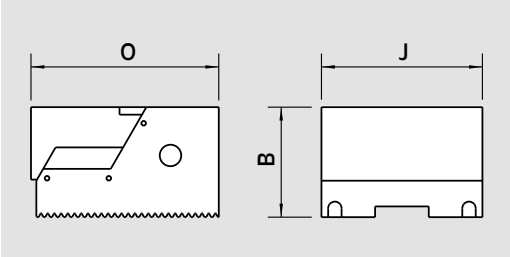

For type	Id. No.	B mm	J mm	O mm	Weight kg
CV 60	77584123	40	60	70	1.4
CV 90	77584223	45	90	80	2.9

Movable jaw set J38 with grooved jaws (for raw workpieces)

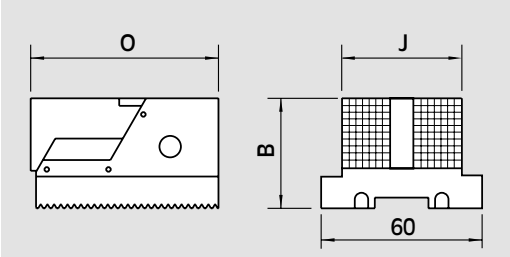

For type	Id. No.	B mm	J mm	O mm	Weight kg
CV 38	77584028	40	38	70	1

Movable jaw set J60-J90 with grooved jaws (for raw workpieces)

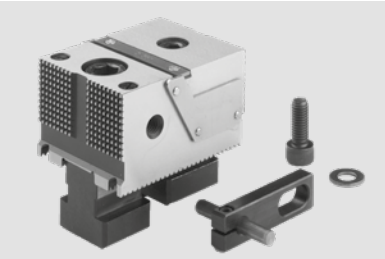

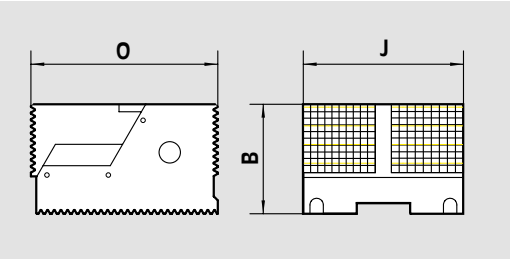

For type	Id. No.	B mm	J mm	O mm	Weight kg
CV 60	77584128	40	60	70	1.4
CV 90	77584228	45	90	80	2.9

Movable set with double jaws

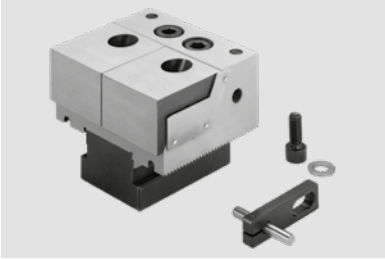

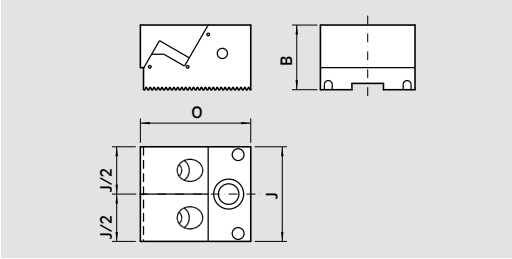

Working example

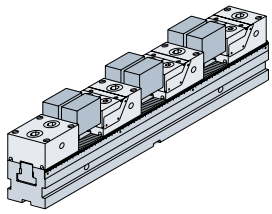

For type	Id. No.	B mm	J mm	O mm	Weight kg
CV 60	77584124	40	60	70	1.5
CV 90	77584224	45	90	80	3

Movable jaw set with aluminium jaws

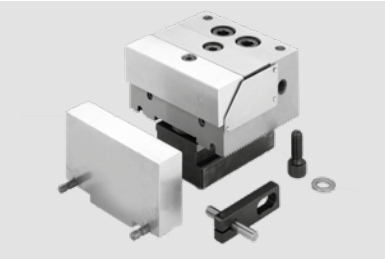

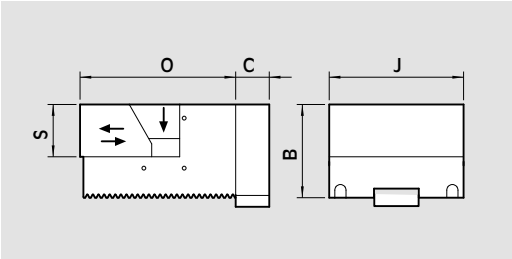

For type	Id. No.	B mm	C mm	J mm	O mm	S mm	Weight kg
CV 60	77584145	40	15	60	69.5	23	1.2
CV 90	77584245	45	20	90	80	25	2.7

Movable jaw set with steel soft jaws

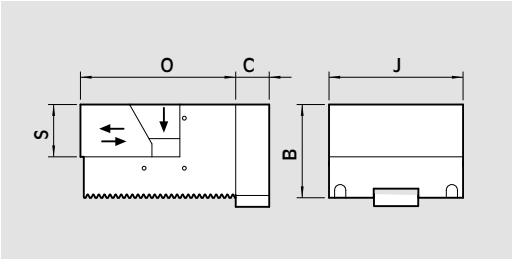

For type	Id. No.	B mm	C mm	J mm	O mm	S mm	Weight kg
CV 60	77584146	40	15	60	69.5	23	1.4
CV 90	77584246	45	20	90	80	25	3

Movable jaw set with steel hardened jaw

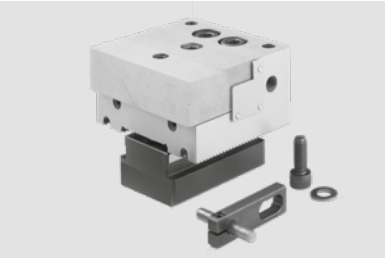

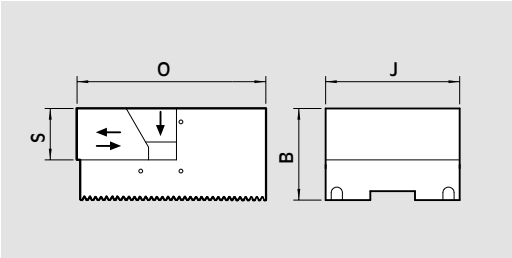

For type	Id. No.	B mm	J mm	O mm	S mm	Weight kg
CV 60	77584147	40	60	69.5	23	1.4
CV 90	77584247	45	90	80	25	3

Fixed support with fixed slide way J38 smooth/grooved jaws

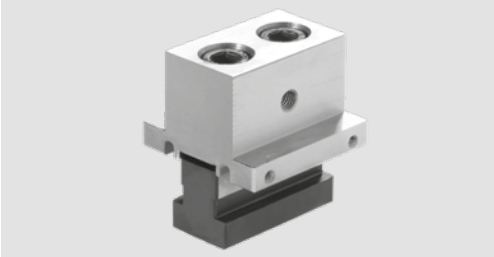

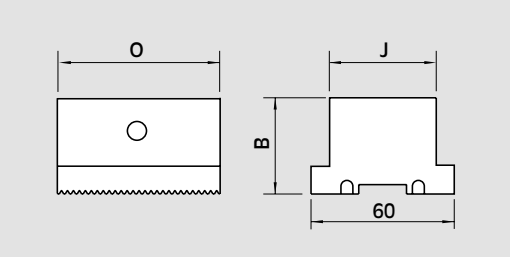

For type	Id. No.	B mm	J mm	O mm	Weight kg
CV 38	58407200	40	38	60	1

Fixed support with fixed slide way J60-J90 smooth/grooved jaws

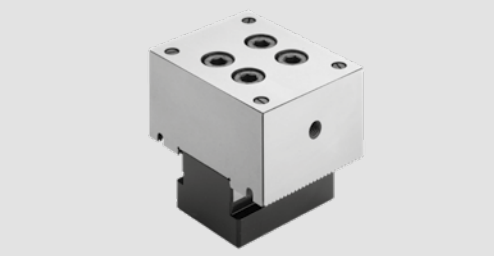

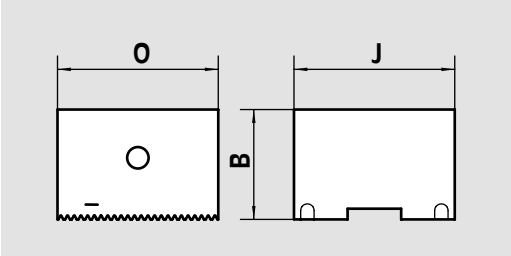

For type	Id. No.	B mm	J mm	O mm	Weight kg
CV 60	58417200	40	60	60	1.4
CV 90	58427200	45	90	70	2.9

Fixed support with fixed slide way J38 with grooved jaws

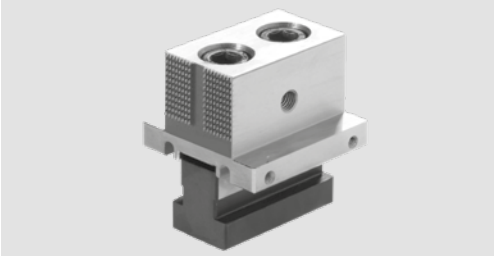

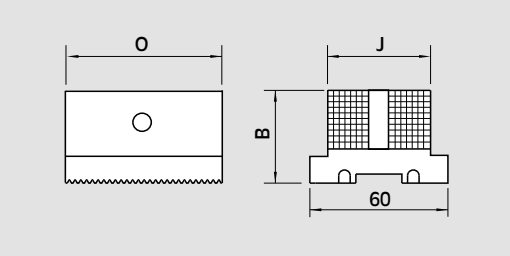

For type	Id. No.	B mm	J mm	O mm	Weight kg
CV 38	58407210	40	38	60	0,87

Fixed support with fixed slide way J60-J90 with grooved jaws

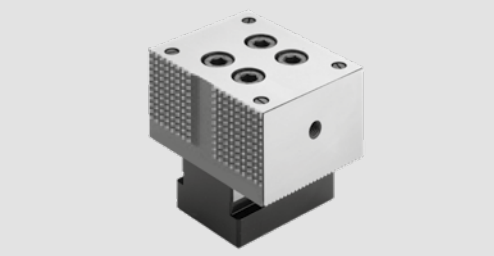

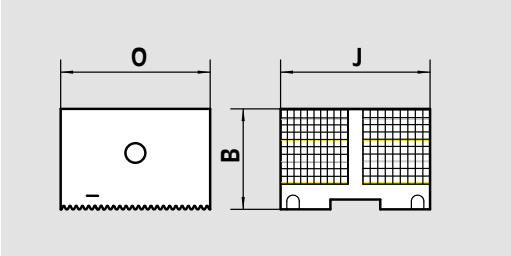

For type	Id. No.	B mm	J mm	O mm	Weight kg
CV 60	58417210	40	60	60	1.4
CV 90	58427210	45	90	70	2.9

CLAK-SYSTEM: Quick change for CIVI multiple clamping system

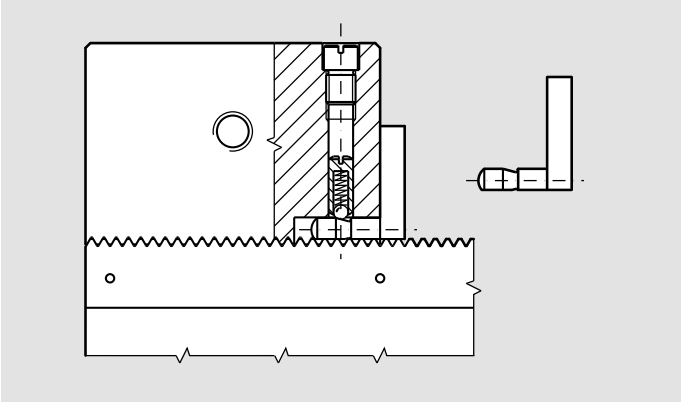

The exclusive and proven CLAK SYSTEM, for the quick replacement of parallels and jaws has been applied for use with the CIVI 2000 equipment with a new patent.

This equipment offers:
- The quick replacement of parallels and jaws
- The elimination of clamps and locks thanks to the patented selflocking system
- The increase in accuracy

All components are heat treatedand precision ground.

Set of 4 pair of parallels “Clak System”

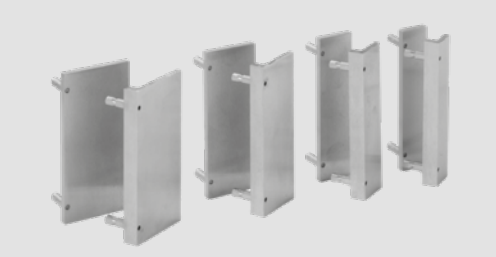

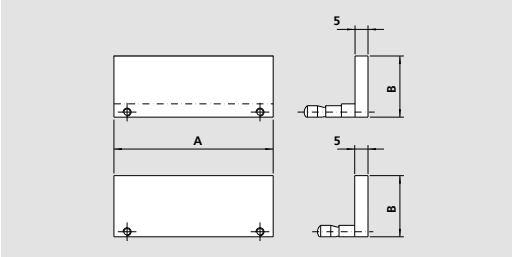

For type	Id. No.	A mm	B mm				Weight kg
CV 38	58409204	38	18	23	28	37	0.4
CV 60	58419204	60	18	23	28	37	0.49
CV 90	58429204	90	18	23	33	42	0.77

V jaw “Clak System”

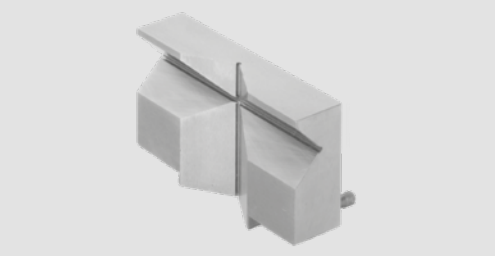

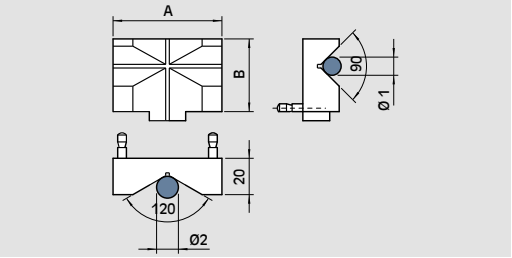

For type	Id. No.	A mm	B mm	Ø 1		Ø 2	
				min. mm	max. mm	min. mm	max. mm
CV 38	58409400	38	40	10	24	9	45
CV 60	58419400	60	40	10	28	11	70
CV 90	58429400	90	45	10	28	11	70

Grooved jaw

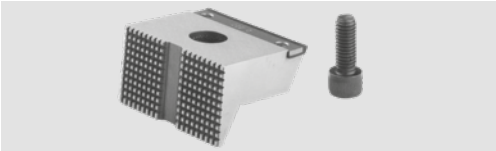

For type	Id. No.
CV 38	58404419
CV 60	58414419
CV 90	58424419

Smooth jaw with guard

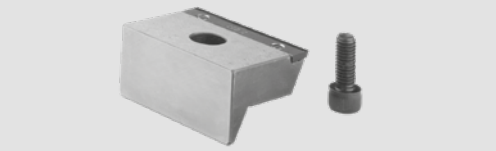

For type	Id. No.
CV 38	58400409
CV 60	58410409
CV 90	58420409

Pair of parallels “Clak System”

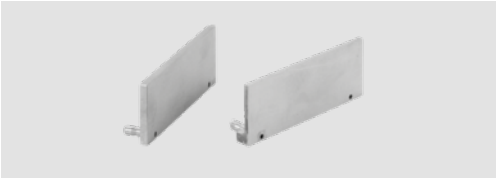

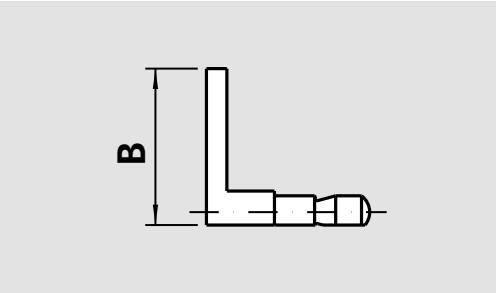

For type	Id. No.	B mm
CV 38	58403518	18
CV 38	58403523	23
CV 38	58403528	28
CV 38	58403537	37
CV 60	58413518	18
CV 60	58413523	23
CV 60	58413528	28
CV 60	58413535	35
CV 60	58413537	37
CV 90	58423518	18
CV 90	58423523	23
CV 90	58423533	33
CV 90	58423540	40
CV 90	58423542	42

Pair of aluminium jaws “Clak System”

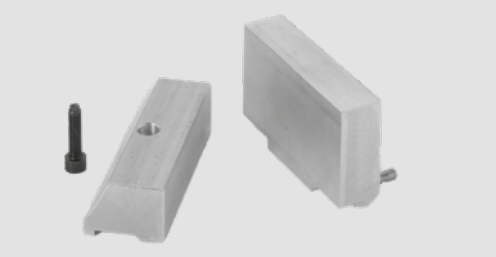

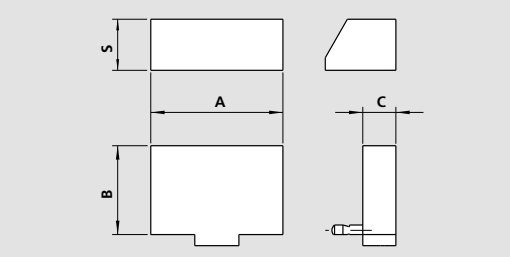

For type	Id. No.	A mm	B mm	C mm	S mm	Weight kg
CV 60	58419549	60	40	15	23	0.19
CV 90	58429549	90	45	20	25	0.4

Pair of soft steel jaws “Clak System”

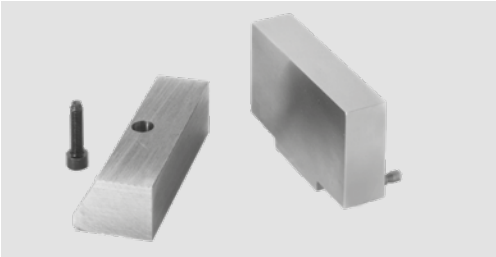

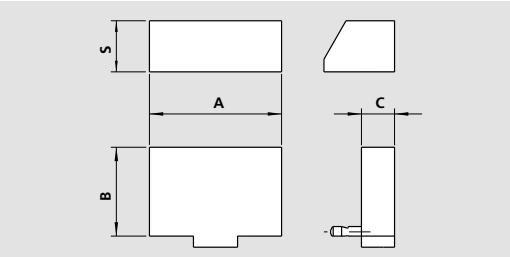

For type	Id. No.	A mm	B mm	C mm	S mm	Weight kg
CV 60	58419649	60	40	15	23	0.58
CV 90	58429649	90	45	20	25	1.2

Hardened jaws

Id. No.	For type	Peso (Kg)
58410459	CIVI 2000/60 x ...	0.300
58420459	CIVI 2000/90 x ...	0.540

Soft steel jaws

Id. No.	For type	Peso (Kg)
58410449	CIVI 2000/60 x ...	0.300
58420449	CIVI 2000/90 x ...	0.540

Aluminium jaws

Id. No.	For type	Peso (Kg)
58410439	CIVI 2000/60 x ...	0.125
58420439	CIVI 2000/90 x ...	0.220

Work stop

Id. No.	For type	
58315010	CIVI 2000/38/60 x ...	for fixed support
58325010	CIVI 2000/90 x ...	for fixed support
58315020	CIVI 2000/38/60/90 x ...	for movable support

Pair of clamps complete with screw and T-nuts

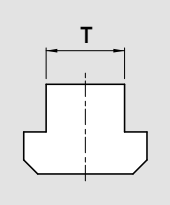

Id. No.						For type
mm 12	mm 14	mm 16	mm 18	mm 20	mm 22	
58012792	58012793	58012794	58012795	58012796	58012797	CIVI 2000/38/60 x ...
58022792	58022793	58022794	58022795	58022796	58022797	CIVI 2000/90 x ...

Pair of standard positioning keys

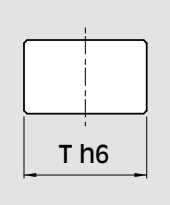

Id. No.	For type	T h6 (mm)
58011592	CIVI 2000/38/60 x ...	12
58011592	CIVI 2000/90 x ...	12

Pair of special positioning keys

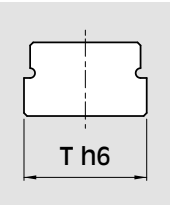

Id. No.						For type
mm 12 - h6	mm 14 - h6	mm 16 - h6	mm 18 - h6	mm 20 - h6	mm 22 - h6	
-	58011593	58011594	58011595	58011596	58011597	CIVI 2000/38/60 x ...
-	58011593	58011594	58011595	58011596	58011597	CIVI 2000/90 x ...

Clamping capacity

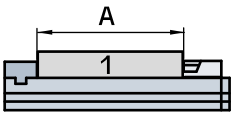

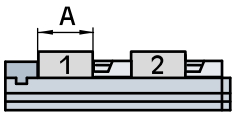

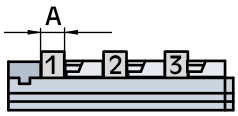

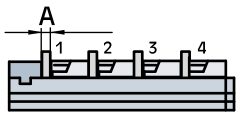

	A max. mm			
CIVI 2000 38/60-250	120	25	-	-
CIVI 2000 38/60-400	270	100	43	15
CIVI 2000 38/60-500	370	150	76	40
CIVI 2000 38/60-630	500	215	120	73
CIVI 2000 90-250	99	-	-	-
CIVI 2000 90-400	249	84	29	-
CIVI 2000 90-500	349	134	62	26
CIVI 2000 90-630	479	199	106	59

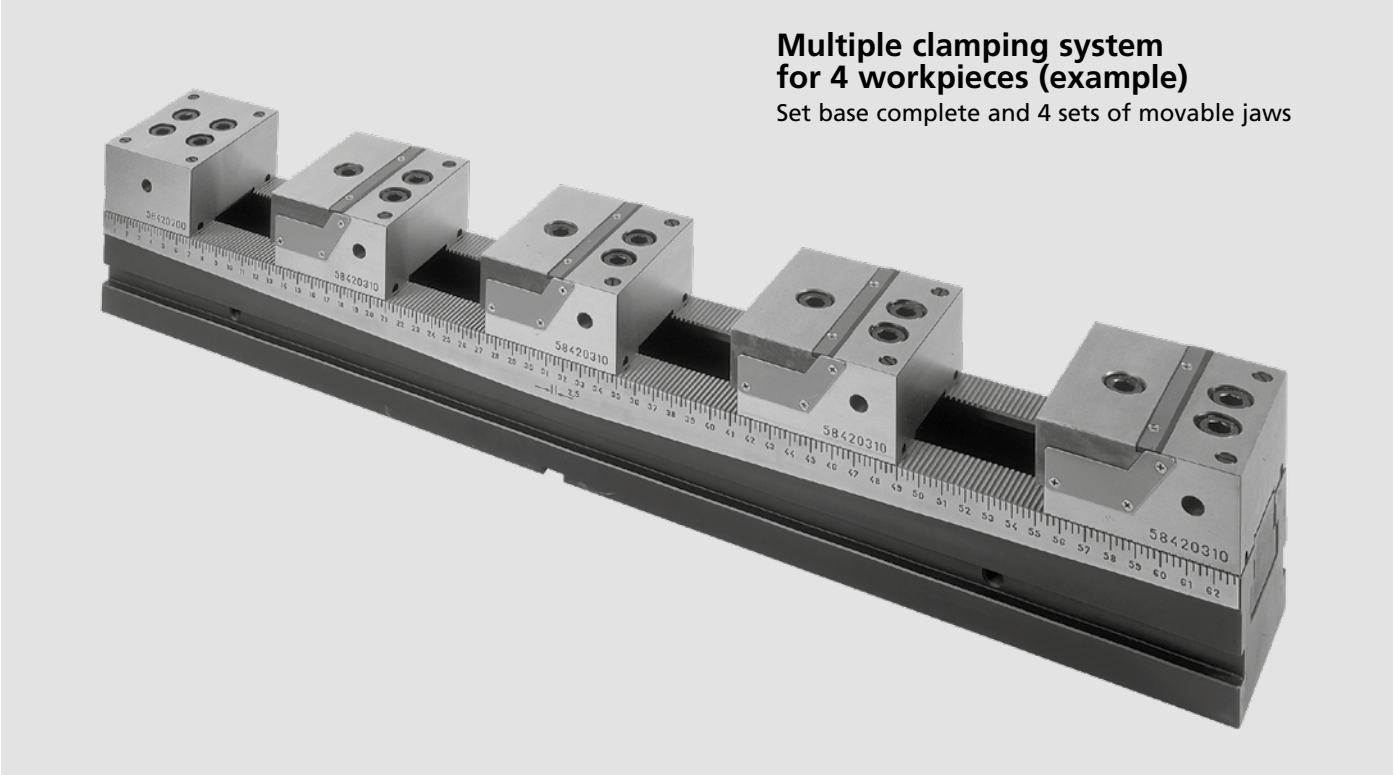

Multiple clamping system for 4 workpieces (example)

Set base complete and 4 sets of movable jaws

Example of assembling with soft jaws

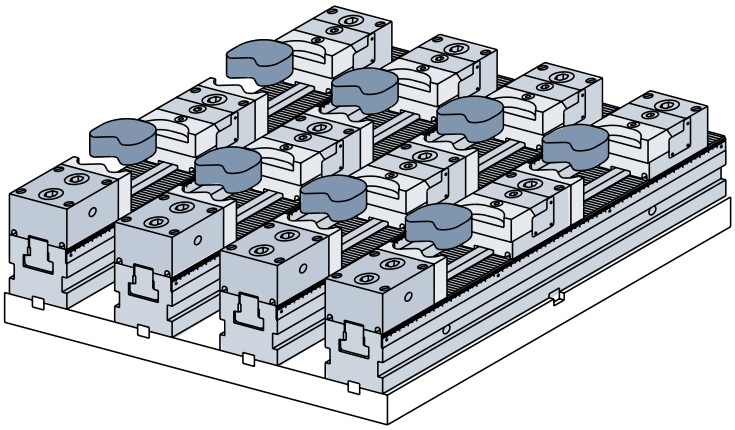

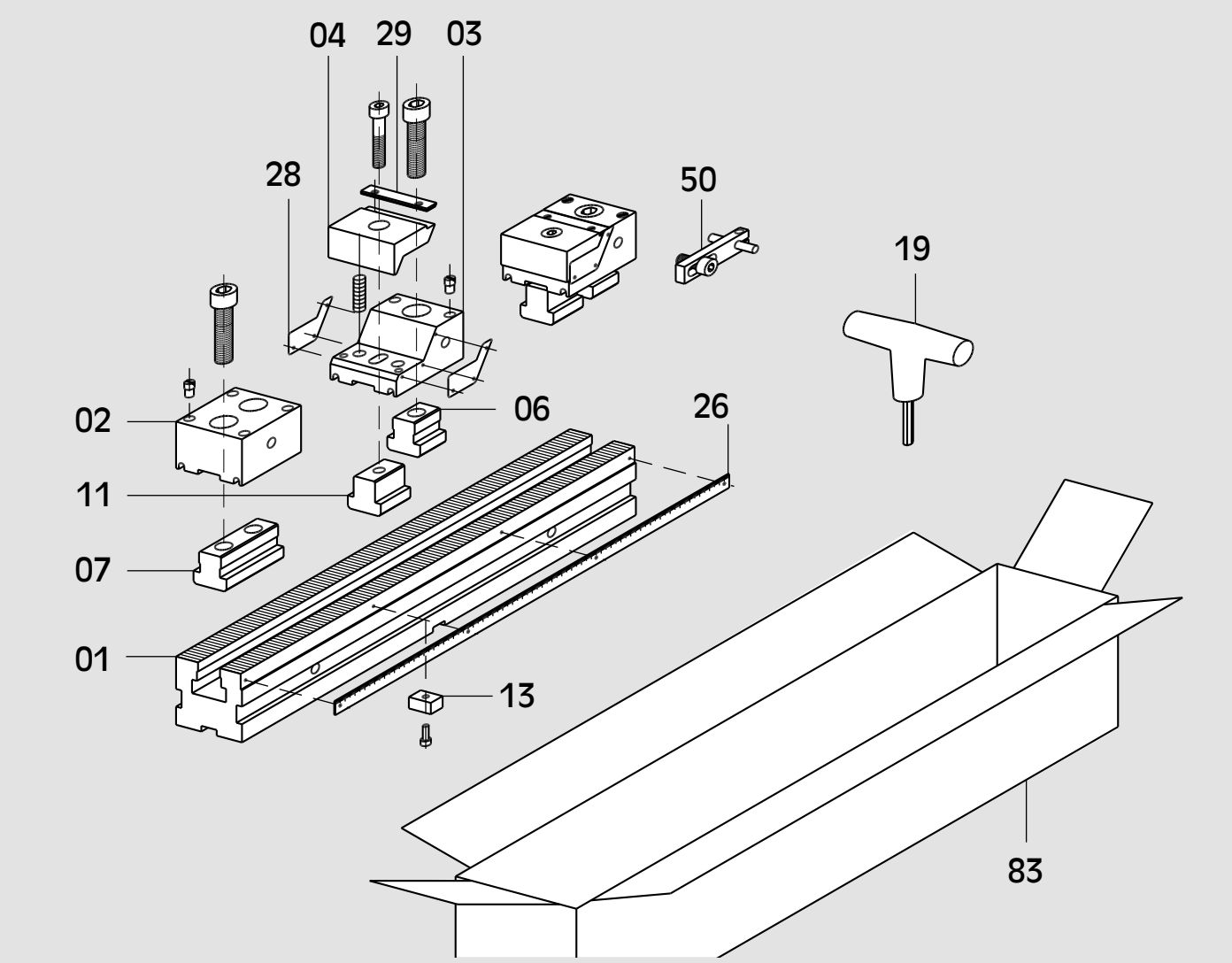

Description

01	Base	**07**	Nuts	**28**	Casing for protection
02	Fixed support	**11**	Nuts	**29**	Guard
03	Movable suppor	**13**	Positioning keys	**50**	Work stop
04	Jaw	**19**	T-wrench	**83**	Cardboard box
06	Nuts	**26**	Steel rule		

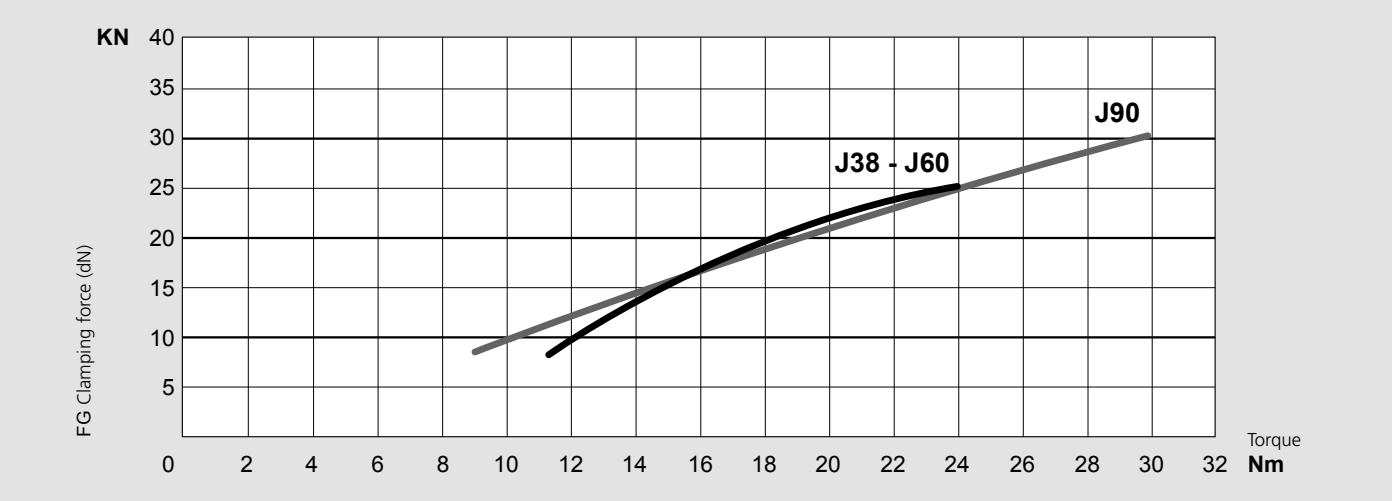

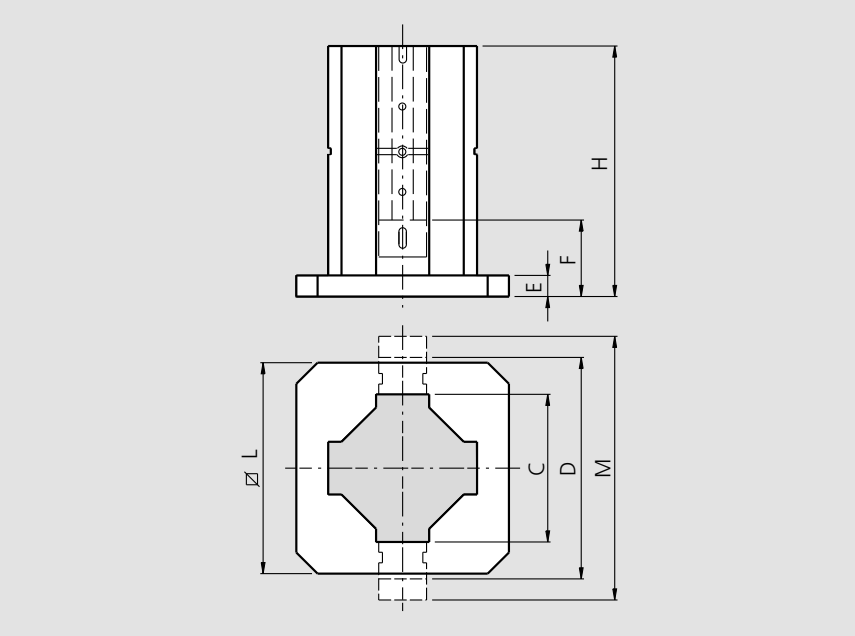

One possible configuration

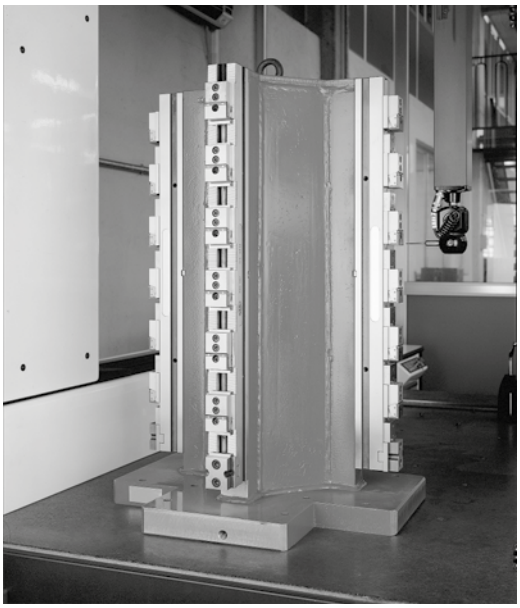

	For type	Id. No.	C mm	D mm	E mm	F mm	H mm	L mm	M mm	Weight kg
Steel	CV-VCS 38/60-400	58428011	250	370	40	120	460	400	450	110
	CV-VCS 38/60-500	58428021	250	370			560	400	450	123
	CV-VCS 38/60-500	58428022	300	420			560	500	500	165
	CV-VCS 38/60-630	58428031	250	370			690	400	450	142
	CV-VCS 38/60-630	58428032	300	420			690	500	500	187
	CV-VCS 38/60-630	58428033	380	500			690	630	580	261
	CV-VCS 90-400	58428011	250	390	40	130	460	400	480	110
	CV-VCS 90-500	58428021	250	390			560	400	480	123
	CV-VCS 90-500	58428022	300	440			560	500	530	165
	CV-VCS 90-630	58428031	250	390			690	400	480	142
	CV-VCS 90-630	58428032	300	440			690	500	530	187
	CV-VCS 90-630	58428033	380	520			690	630	610	261
Aluminium	CV-VCS 38/60-630	58427931	250	370	40	120	690	400	450	66
	CV-VCS 38/60-630	58427932	250	370			690	500	450	76
	CV-VCS 38/60-630	58427933	250	500			690	630	580	122
	CV-VCS 90-630	58427931	250	390	40	130	690	400	480	66
	CV-VCS 90-630	58427932	250	390			690	500	480	76
	CV-VCS 90-630	58427933	250	520			690	630	610	122

CIVI-VCS 2000/6

Multiple clamping system

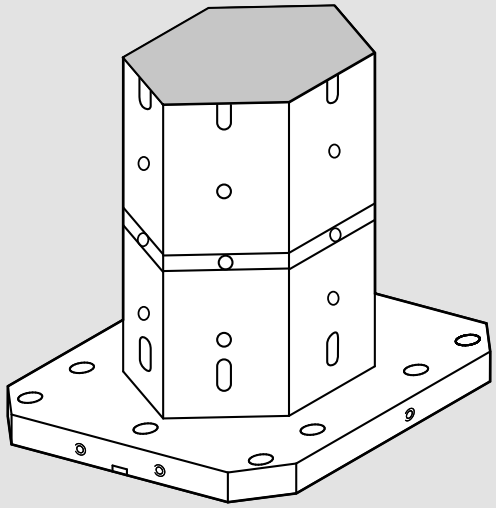

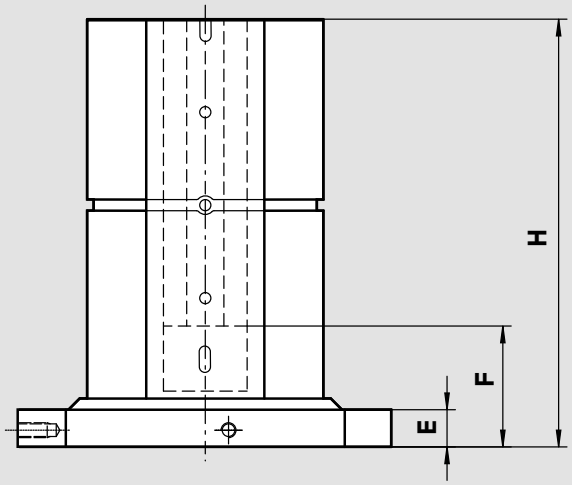

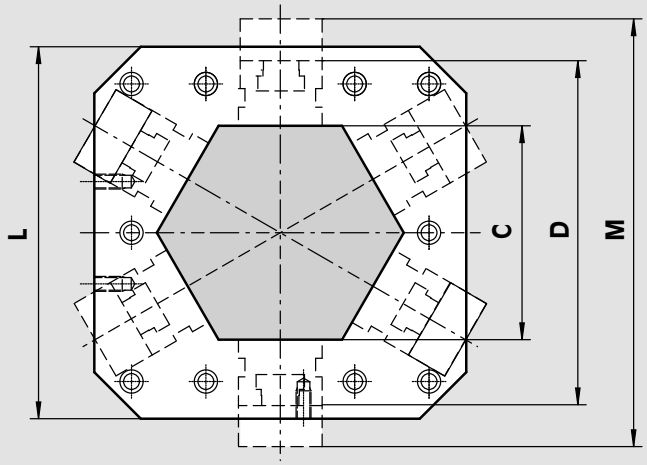

	For type	Id. No.	C mm	D mm	E mm	F mm	H mm	L mm	M mm	Weight kg
Steel	CIVI 2000/38/60-400	58428511	250	370	40	120	460	400	450	119
	CIVI 2000/38/60-500	58428521	250	370			560	400	450	138
	CIVI 2000/38/60-500	58428522	250	370			560	500	450	165
	CIVI 2000/38/60-630	58428531	250	370			690	400	450	160
	CIVI 2000/38/60-630	58428532	250	370			690	500	450	188
	CIVI 2000/38/60-630	58428533	380	500			690	630	580	308
	CIVI 2000/90-400	58428511	250	390	40	130	460	400	480	119
	CIVI 2000/90-500	58428521	250	390			560	400	480	138
	CIVI 2000/90-500	58428522	250	390			560	500	480	165
	CIVI 2000/90-630	58428531	250	390			690	400	480	160
	CIVI 2000/90-630	58428532	250	390			690	500	480	188
	CIVI 2000/90-630	58428533	380	520			690	630	610	308
Aluminium	CIVI 2000/38/60-630	58427531	250	370	40	120	690	400	450	68
	CIVI 2000/38/60-630	58427532	250	370			690	500	450	79
	CIVI 2000/38/60-630	58427533	380	500			690	630	580	126
	CIVI 2000/90-630	58427531	250	390	40	130	690	400	480	68
	CIVI 2000/90-630	58427532	250	390			690	500	480	79
	CIVI 2000/90-630	58427533	380	520			690	630	610	126

CIVI-VCS 2000/8

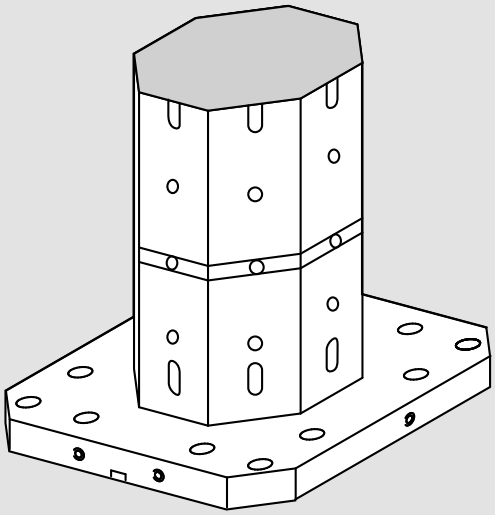

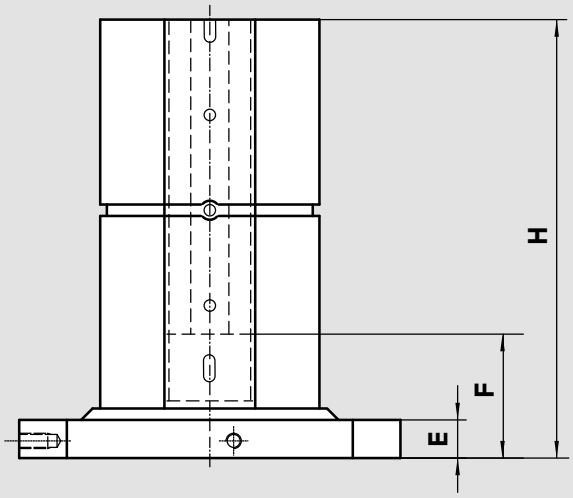

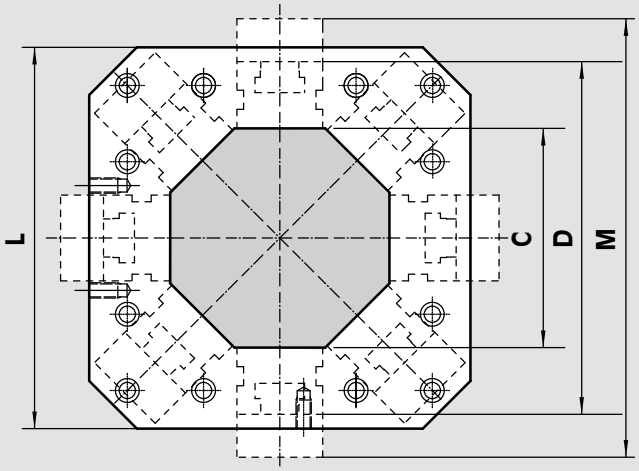

	For type	Id. No.	C mm	D mm	E mm	F mm	H mm	L mm	M mm	Weight kg
Steel	CIVI 2000/38/60-400	58428611	250	370	40	120	460	400	450	116
	CIVI 2000/38/60-500	58428621	250	370			560	400	450	133
	CIVI 2000/38/60-500	58428622	250	370			560	500	450	162
	CIVI 2000/38/60-630	58428631	250	370			690	400	450	155
	CIVI 2000/38/60-630	58428632	250	370			690	500	450	183
	CIVI 2000/38/60-630	58428633	380	500			690	630	580	300
	CIVI 2000/90-400	58428611	250	390	40	130	460	400	480	116
	CIVI 2000/90-500	58428621	250	390			560	400	480	133
	CIVI 2000/90-500	58428622	250	390			560	500	480	162
	CIVI 2000/90-630	58428631	250	390			690	400	480	155
	CIVI 2000/90-630	58428632	250	390			690	500	480	183
	CIVI 2000/90-630	58428633	380	500			690	630	610	300
Aluminium	CIVI 2000/38/60-630	58427631	250	370	40	120	690	400	450	66
	CIVI 2000/38/60-630	58427632	250	370			690	500	450	76
	CIVI 2000/38/60-630	58427633	380	500			690	630	580	122
	CIVI 2000/90-630	58427631	250	390	40	130	690	400	480	66
	CIVI 2000/90-630	58427632	250	390			690	500	480	76
	CIVI 2000/90-630	58427633	380	520			690	630	610	122

CIVI-CN

Column CIVI 2000

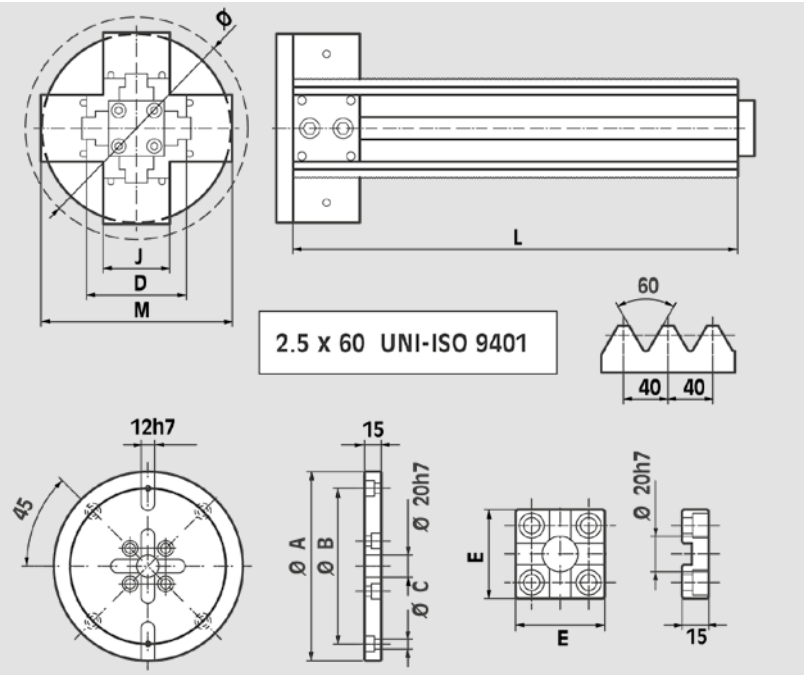

Working example

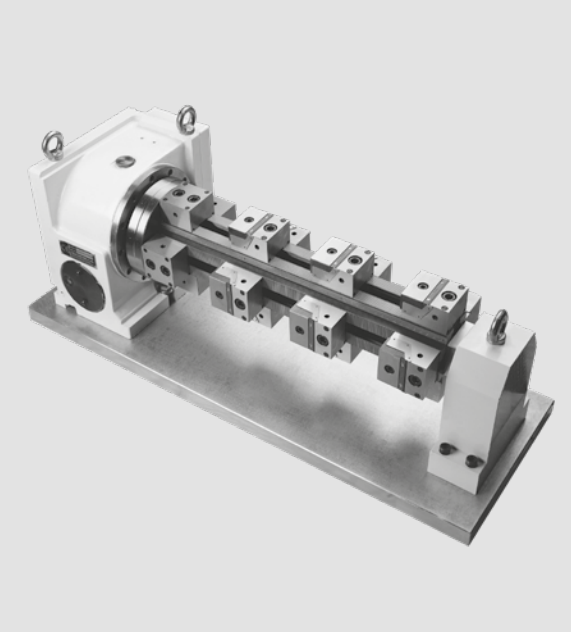

For Type	Id. No.	J mm	D mm	M mm	L mm	Ø rot. mm	Ø A mm	Ø B mm	Ø C mm	E mm	Weight kg
CV-CN 60-400	77584111				400						19
CV-CN 60-500	77584112	60	90	170	500	200	170	140	9	50	23
CV-CN 60-630	77584113				630						29
CV-CN 90-400	77584211				400						34
CV-CN 90-500	77584212	90	115	205	500	230	210	180	11	70	41
CV-CN 90-630	77584213				630						50

TETRABLOK

Multiple clamping system

TETRABLOK
4 positions clamping equipment

Page 6.3.2

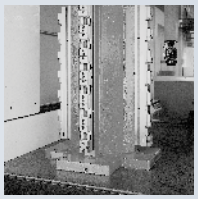

TETRABLOK
Spare parts

Page 6.3.6

TETRABLOK
Accessories

Page 6.3.4

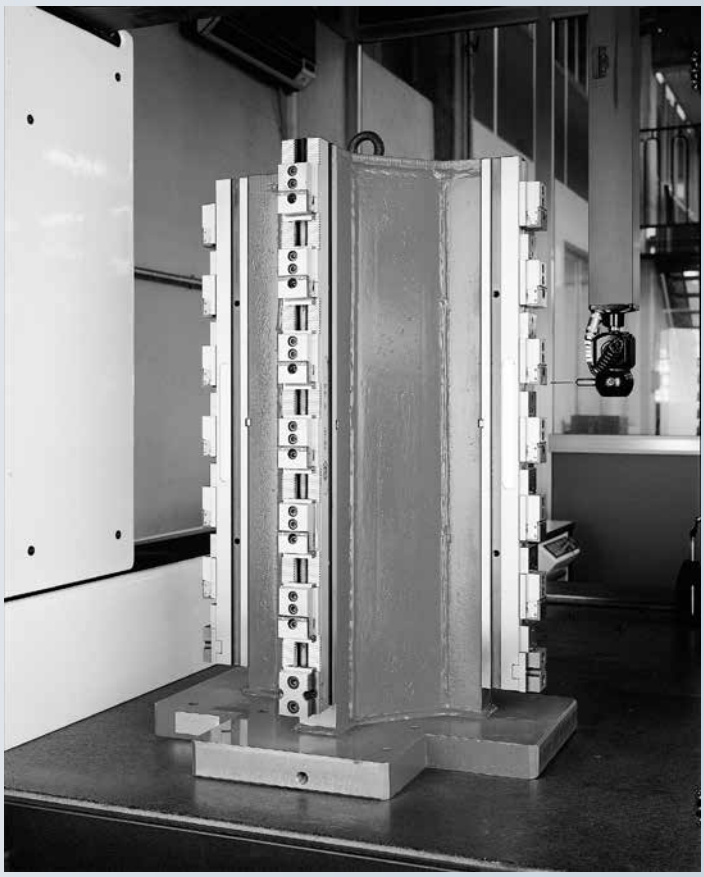

TETRABLOK

4 POSITIONS CLAMPING EQUIPMENT

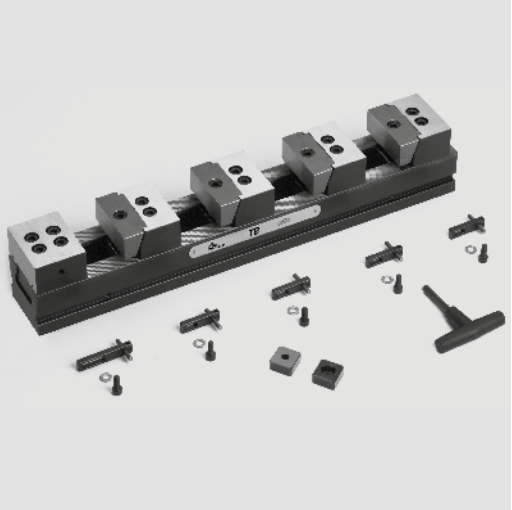

4 positions clamping equipment “TETRABLOK” joins CIVI 2000 with a good price/quality ratio

Complete with: 1 base(lenght optional), 1 fixed support, 4 sets of movable jaws, 4 workstops, 1 t-wrench.

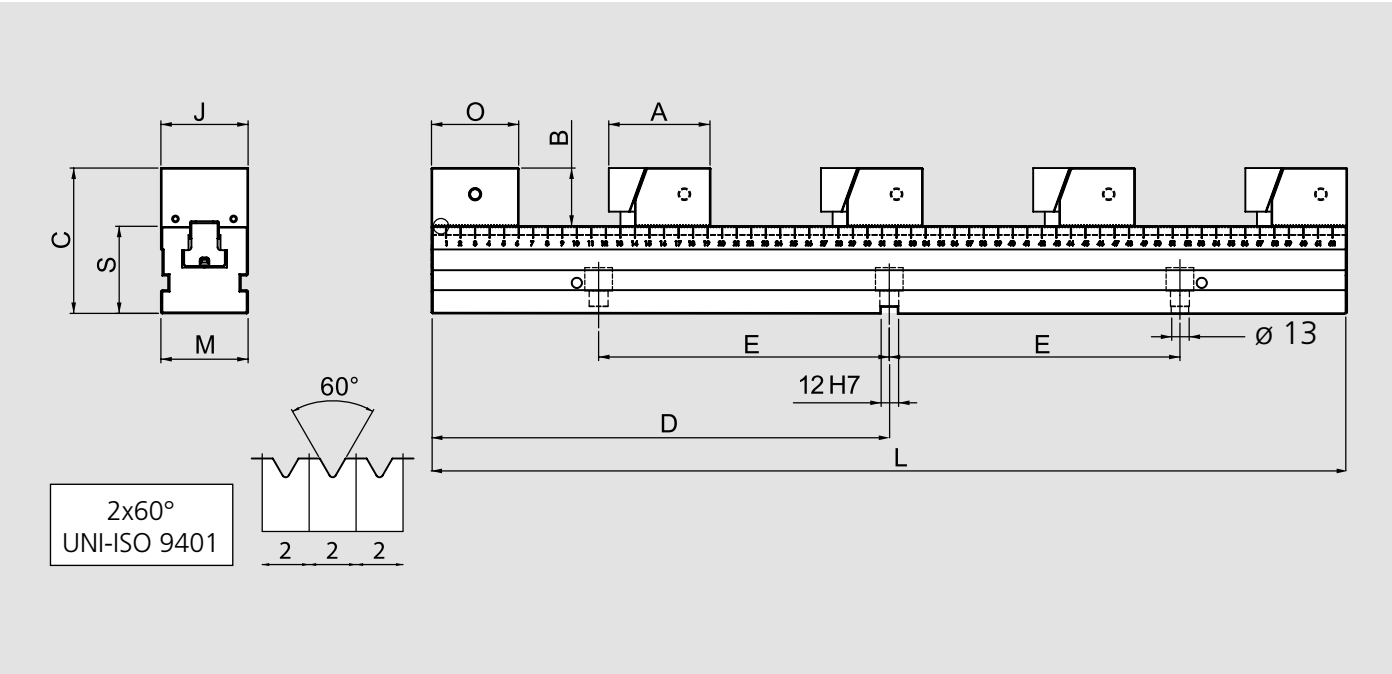

For type	Id. No.	A mm	B mm	C mm	D mm	E mm	J mm	L mm	M mm	O mm	S ±0.01 mm	Weight kg
TB 60-400	77588101				200	100		400				16.9
TB 60-500	77588102	70	40	100	250	150	60	500	60	60	60	18.9
TB 60-630	77588103				315	200		630				22.0
TB 90-400	77588201				200	100		400				27.6
TB 90-500	77588202	80	45	115	250	150	90	500	90	70	70	32.8
TB 90-630	77588203				315	200		630				36.7

Clamping force diagram

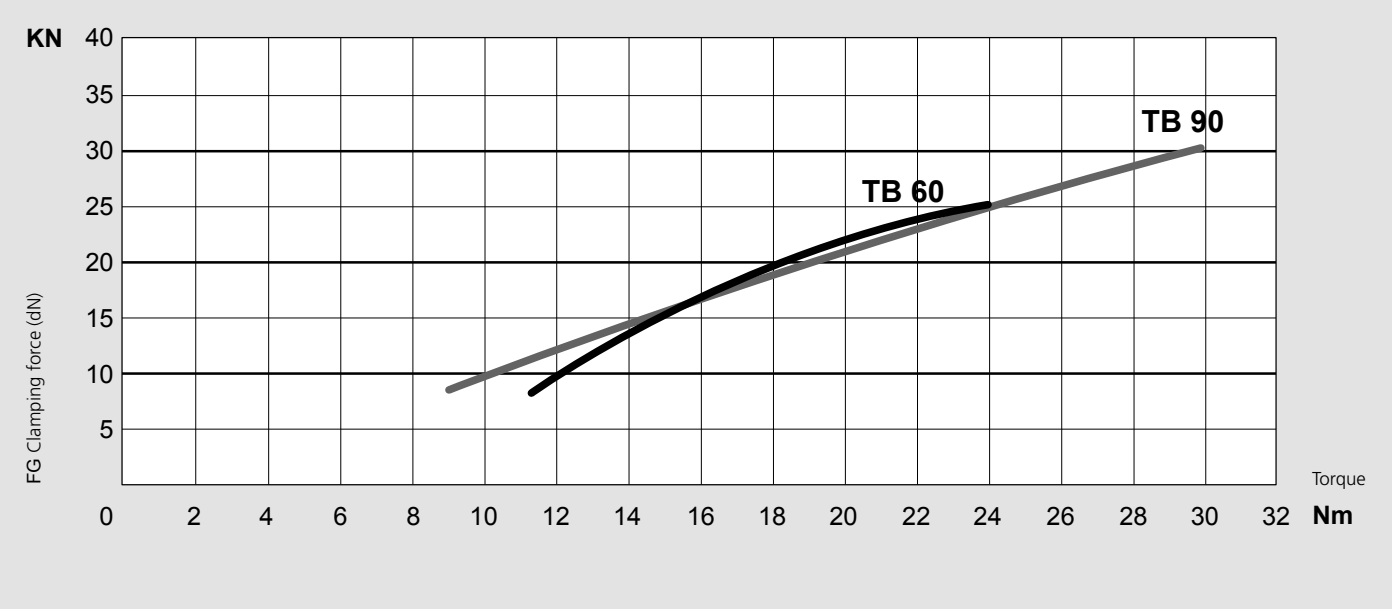

Clamping capacity

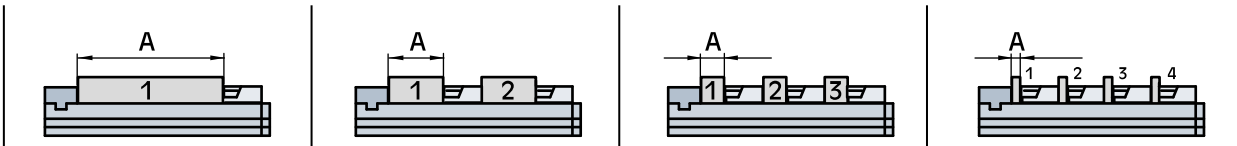

TB 60-400	270	100	43	15
TB 60-500	370	150	76	40
TB 60-630	500	215	120	73
TB 90-400	249	84	29	-
TB 90-500	349	134	62	26
TB 90-630	479	199	106	59

Set of n. 4 pair of parallels for TETRABLOK

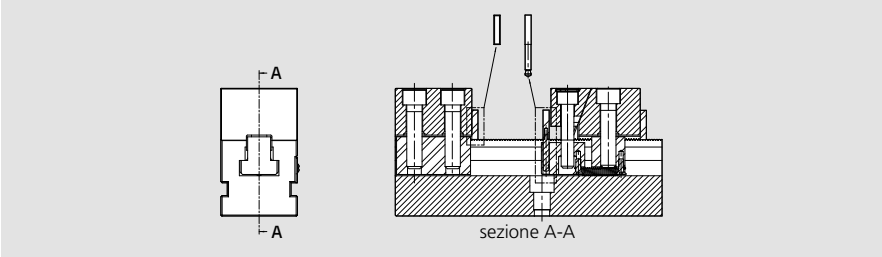

For type	Id. No.	Weight kg
TB 60	58819204	0.4
TB 90	58829204	0.7

Pair of parallels for TETRABLOK

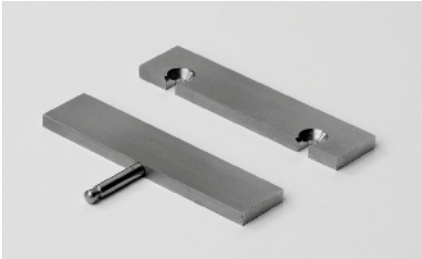

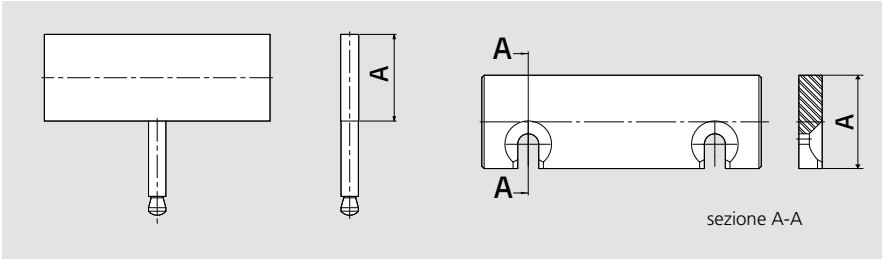

For type	Id. No.	A mm
TB 60	58813518	18
TB 60	58813523	23
TB 60	58813528	28
TB 60	58813537	37
TB 90	58823518	18
TB 90	58823523	23
TB 90	58823533	33
TB 90	58823542	42

Pair of standard positioning keys

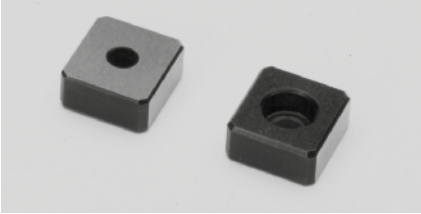

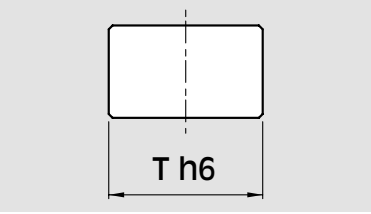

For type	Id. No.	T h6 mm
TB 60/90	58011592	12

Pair of special positioning keys

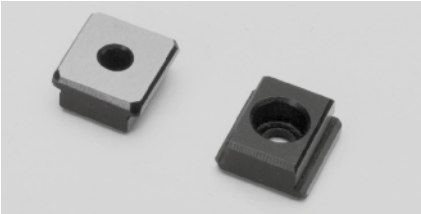

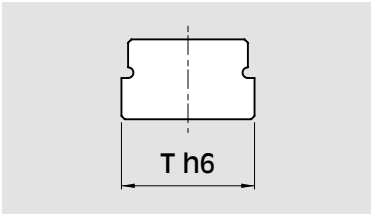

For type Th6	Id. No. 12 mm - h6	14 mm - h6	16 mm - h6	18 mm - h6	20 mm - h6	22 mm - h6
TB 60/90	-	58011593	58011594	58011595	58011596	58011597

Complete fixed support

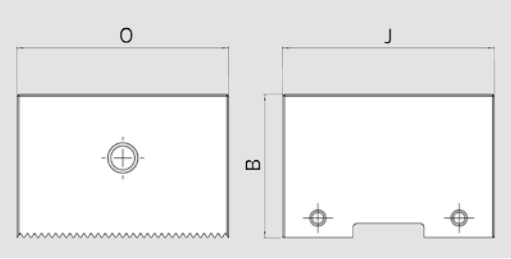

For type	Id. No.	B mm	J mm	O mm	Weight kg
TB 60	58817220	40	60	70	1.3
TB 90	58827220	45	90	80	2.8

Movable support with jaw

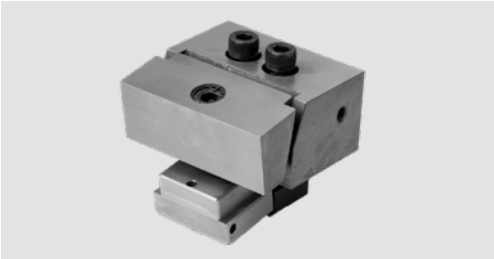

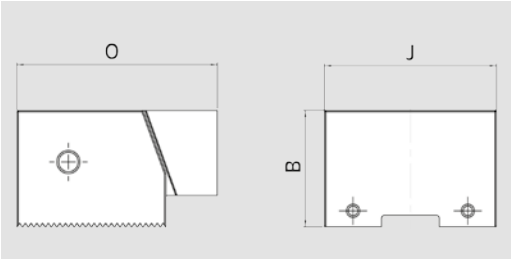

For type	Id. No.	B mm	J mm	O mm	Weight kg
TB 60	77588123	40	60	70	1.4
TB 90	77588223	45	90	80	3

Smooth jaw

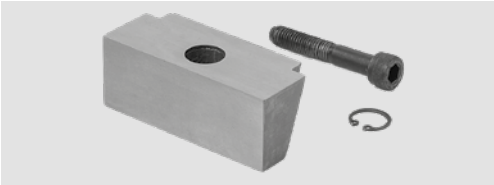

For type	Id. No.
TB 60	58810409
TB 90	58820409

Work stop

For type	Id. No.	
TB 60	58315010	fixed
TB 90	58325010	fixed
TB 60/90	58315020	movable

Pair of clamps complete with screw and T-nut

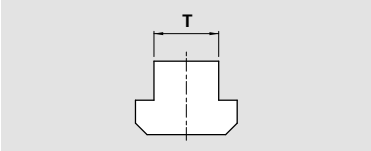

For type	Id. No.					
	12 mm	14 mm	16 mm	18 mm	20 mm	22 mm
TB 60	58012792	58012793	58012794	58012795	58012796	58012797
TB 90	58022792	58022793	58022794	58022795	58022796	58022797

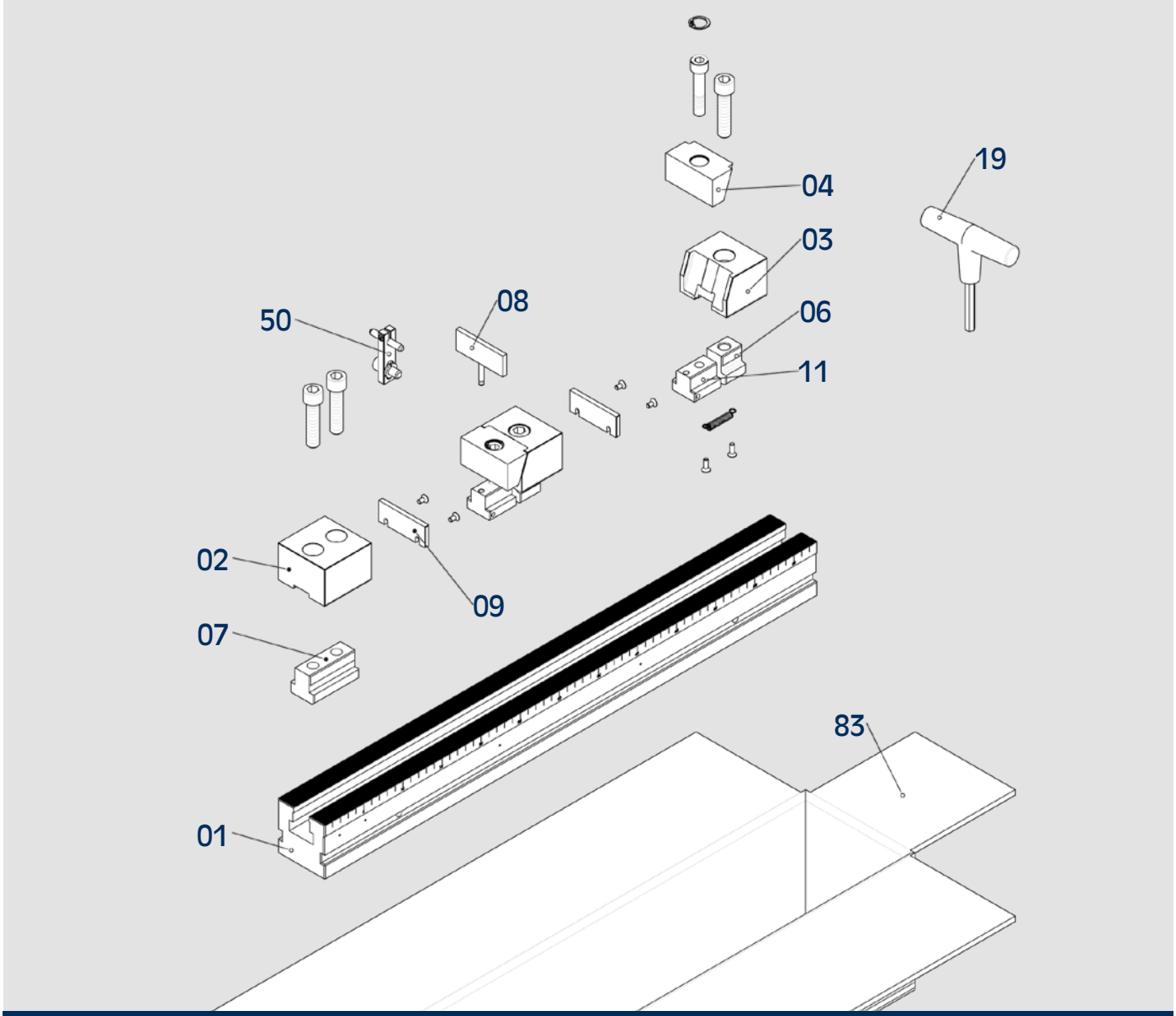

Description

01	Base	**06**	Nuts	**11**	Nuts
02	Fixed support	**07**	Nuts	**19**	T-wrench
03	Movable support	**08**	Parallel	**50**	Work stop
04	Jaw	**09**	Parallel	**83**	Cardboard box

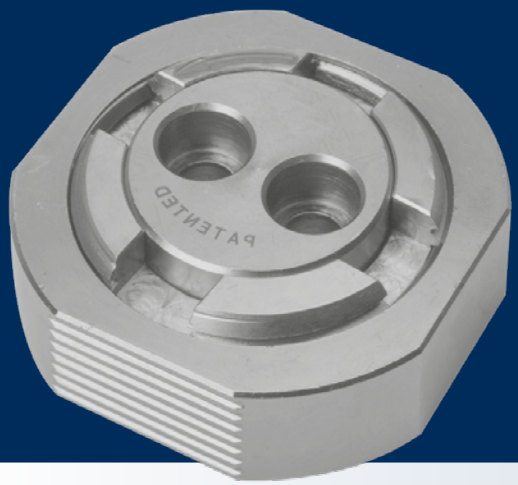

CAM SYSTEM

Eccentric self-locking clamping device

Page 7.3

Set CAM SYSTEM "t"

Eccentric self-locking clamping device

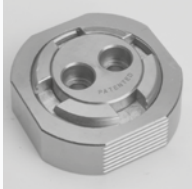

Page 7.4

CAM SYSTEM "t"

Eccentric self-locking clamping device

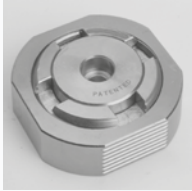

Page 7.5

CAM SYSTEM "g"

Eccentric self-locking clamping device

Page 7.6

Set CAM SYSTEM "s"

Eccentric self-locking clamping device

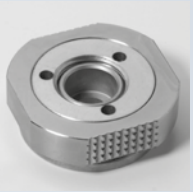

Page 7.7

CAM SYSTEM "s"

Eccentric self-locking clamping device

CAM SYSTEM

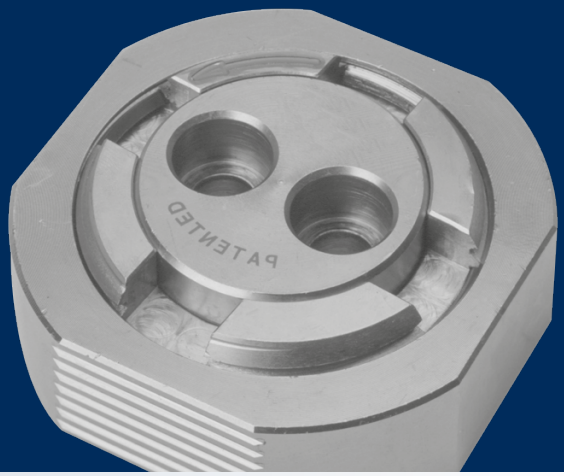

Eccentric self-locking clamping device

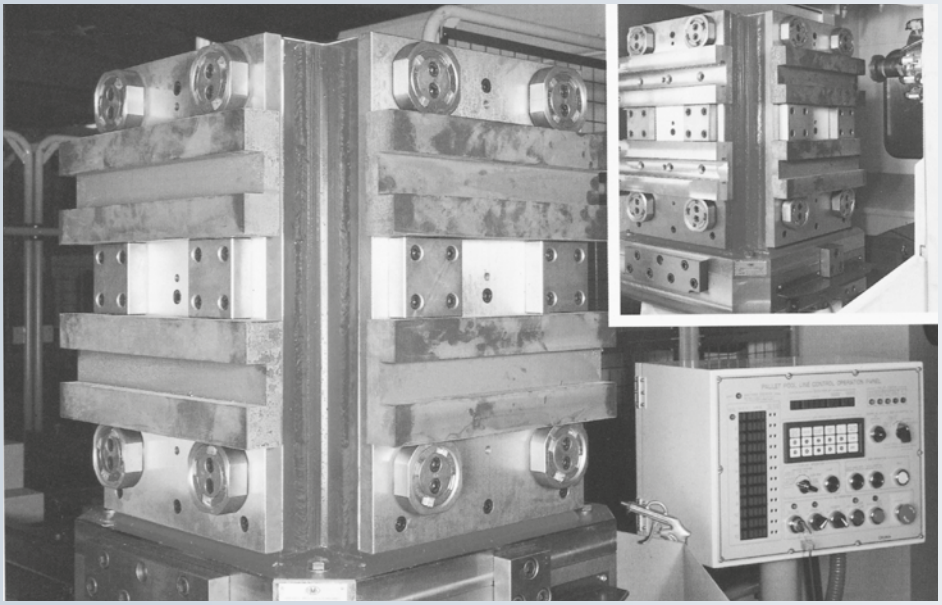

The **CAM SYSTEM** has been developed and patented to easily clamp workpieces with varied forms. This compact product enables double locking (Axial and Radial) using the eccentric and propeller principle.
With a rotation of approximately 15°, contact is made with the workpiece with the complete clamping face of the CAM.
The **CAM SYSTEM** clamps the workpiece with a clamping force of 4,000 kg (**t**) and 2,000 kg (**s**).
CAM SYSTEM is supplied with both cap heads bolts and T-nuts to suit the particular machine tool cross slots.
CAM SYSTEM "g" is supplied singly, to the customer detailed grid specification.

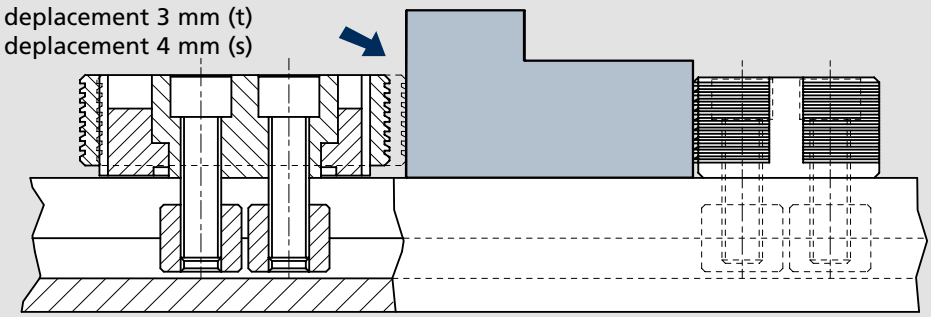

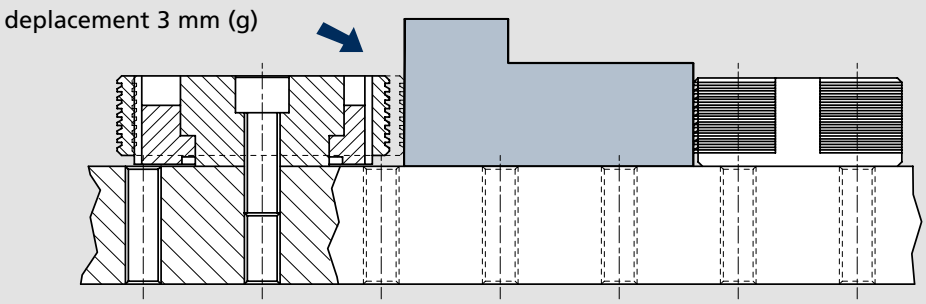

Eccentric self-locking clamping device

CAM SYSTEM “t“

Set CAM SYSTEM “t” complete with:
N. 4 CAM SYSTEM “t”
N. 4 fixed block CAM SYSTEM ‘t’
N. 8 pair of T-nuts with screw
N. 1 key for CAM SYSTEM ‘t’
wooden packing case

Id. No.	T mm
77584414	14
77584416	16
77584418	18
77584420	20
77584422	22

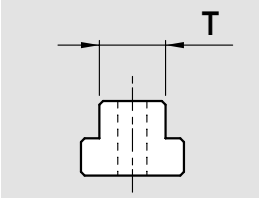

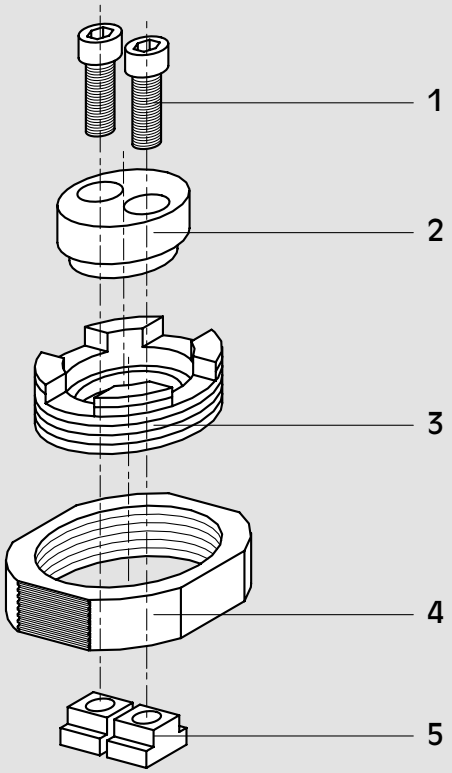

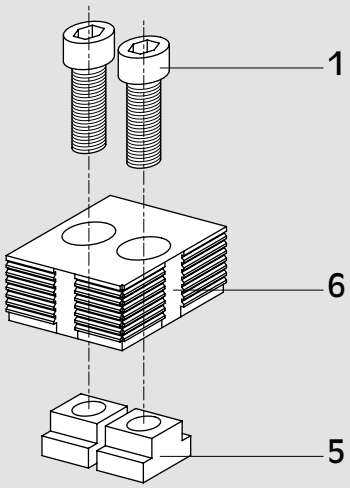

Description

01	Screw	**03**	Eccentric element	**05**	T-nuts
02	Central element	**04**	Clamping element	**06**	Fixed block

CAM SYSTEM “t“

Eccentric self-locking clamping device

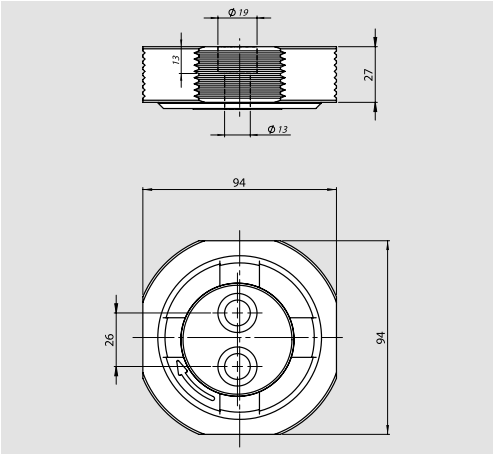

CAM SYSTEM “t“ single

Id. No.
58445010

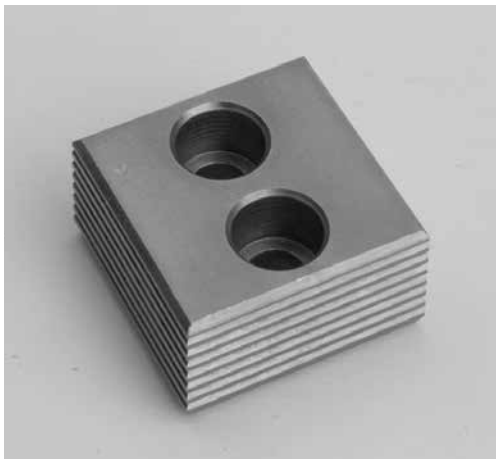

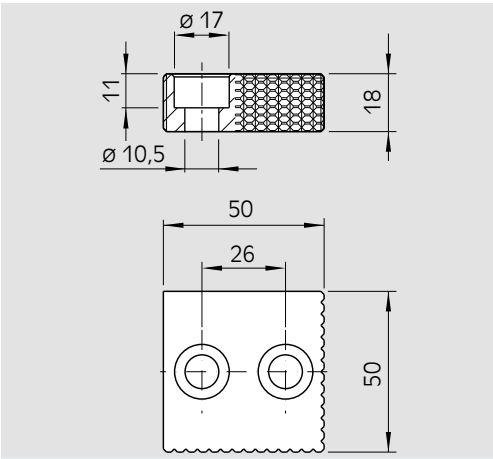

Fixed block CAM SYSTEM “t“

Id. No.
58440400

Key for CAM SYSTEM “t“

Id. No.
58440800

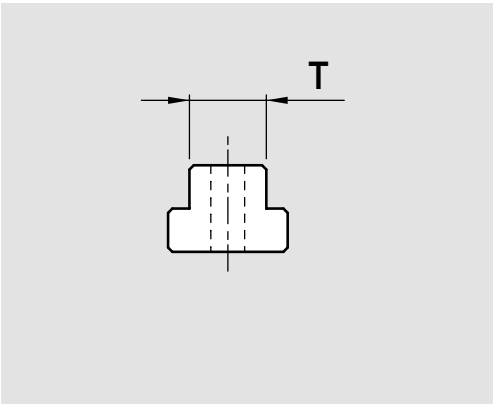

Pair of T-nuts with screw CAM SYSTEM “t“

Id. No.	T mm
58442593	14
58442594	16
58442595	18
58442596	20
58442597	22

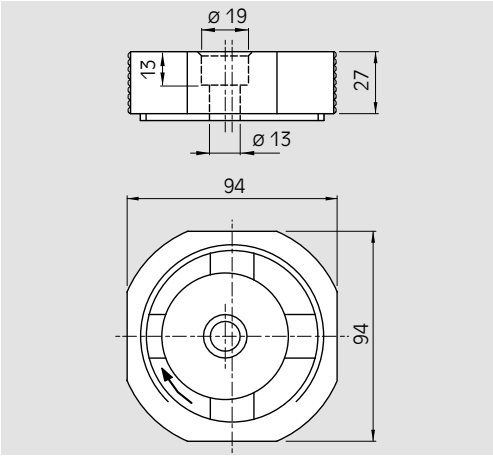

CAM SYSTEM “g” single

Id. No.
58445020

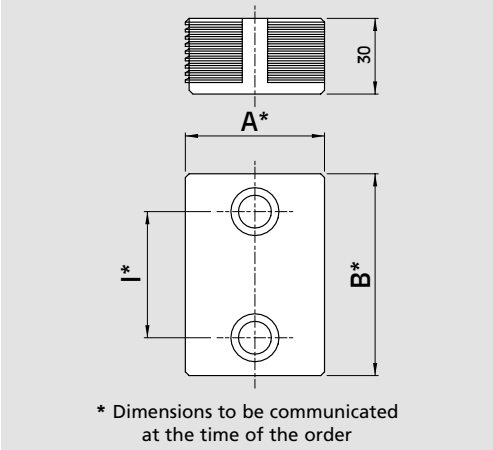

Fixed block CAM SYSTEM “g”

Id. No.
58441400

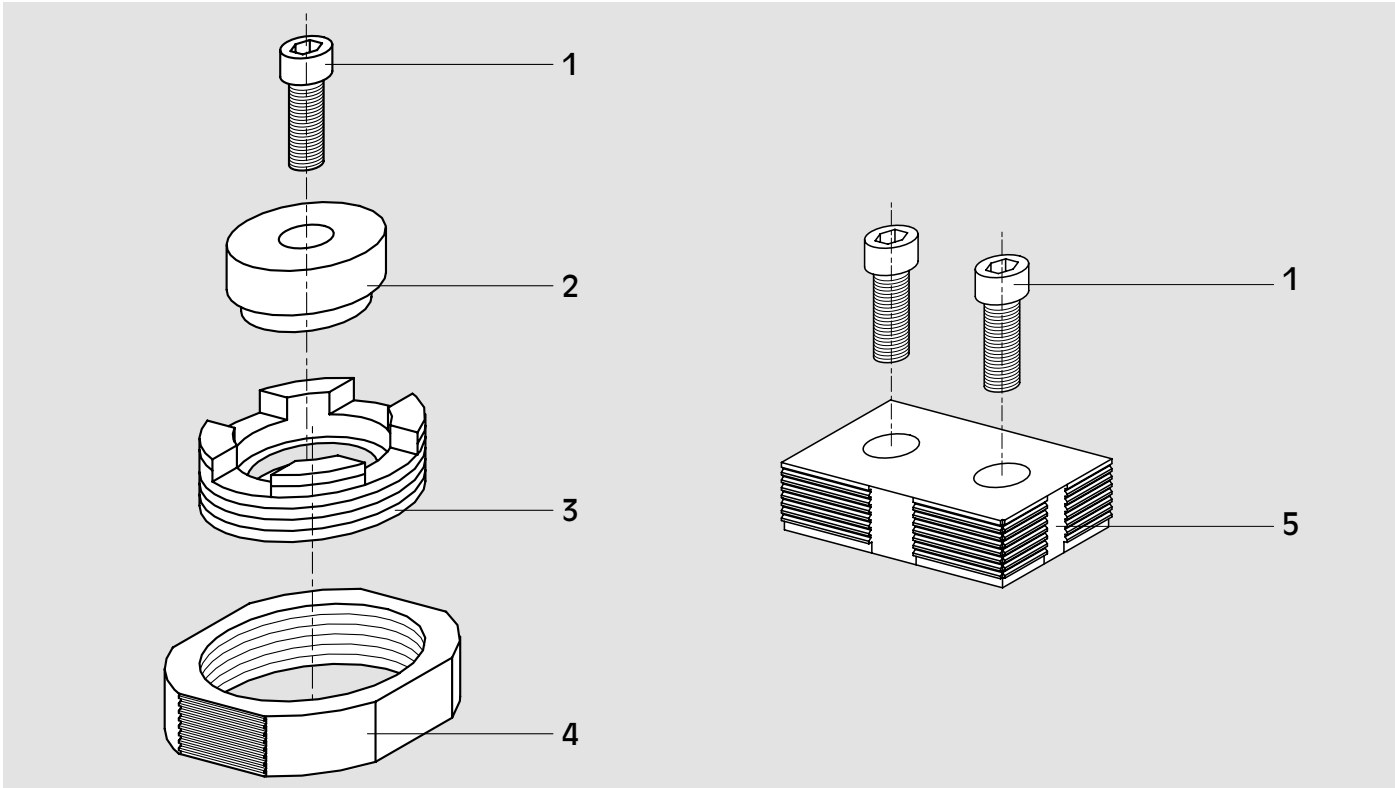

Description

01	Screw	**03**	Eccentric element	**05**	Fixed block
02	Central element	**04**	Clamping element		

CAM SYSTEM "s"

Eccentric self-locking clamping device

Set Cam SYSTEM "s" complete with:
N. 4 CAM SYSTEM "s"
N. 4 fixed block CAM SYSTEM "s"
N. 6 pair of T-nuts with screw
N. 1 Key for CAM SYSTEM "s"
wooden packing case

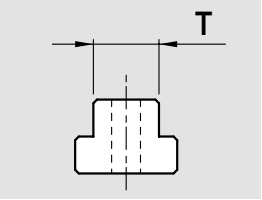

Id. No.	T mm
77584314	14
77584316	16
77584318	18
77584320	20
77584322	22

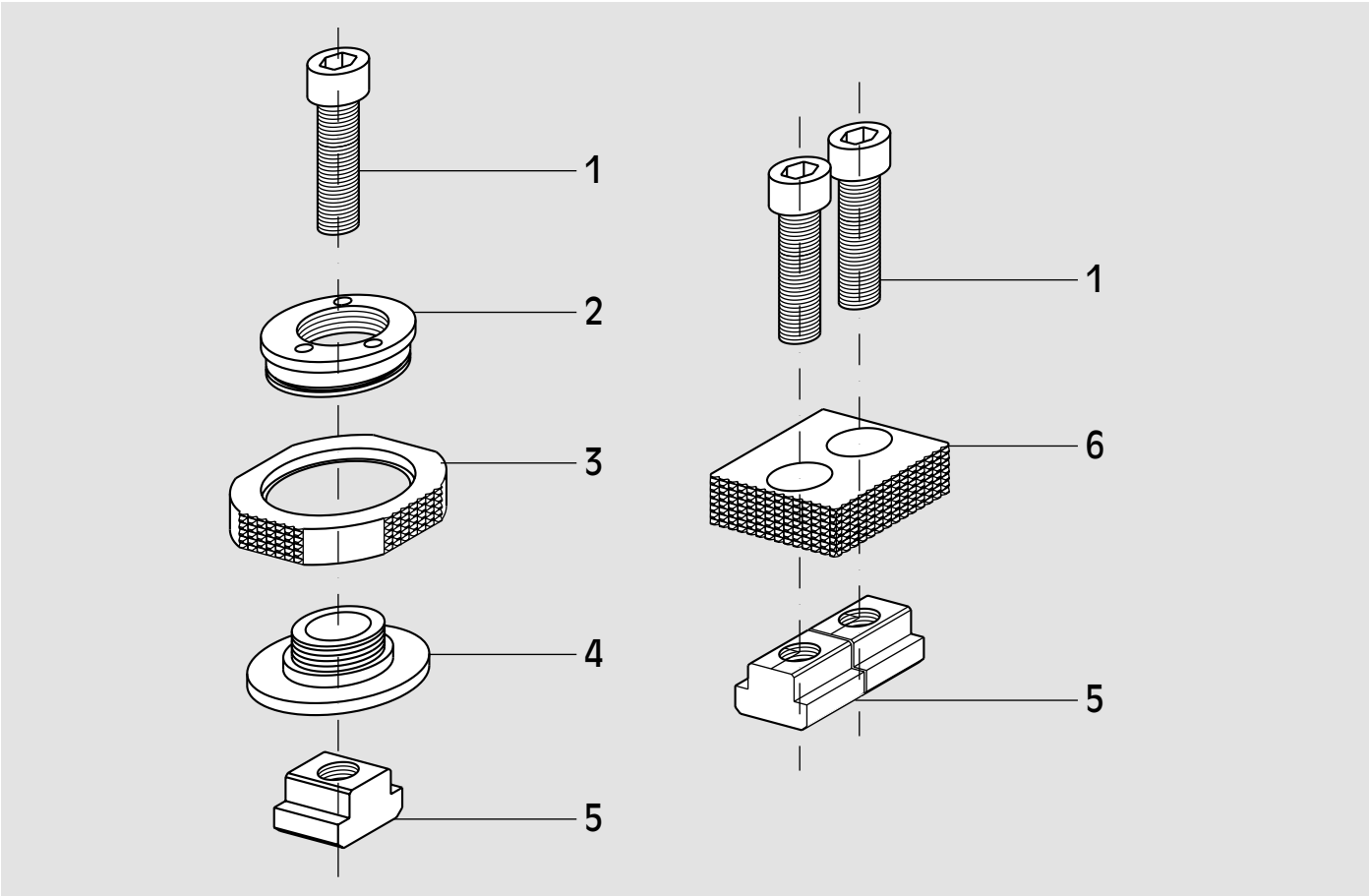

Description

01	Screw	**03**	Clamping element	**05**	T-nuts
02	Eccentric element	**04**	Central element	**06**	Fixed block

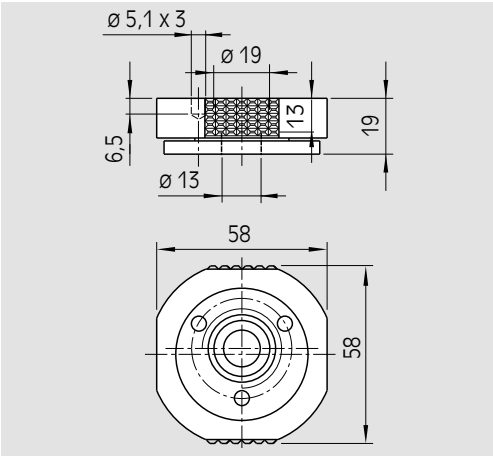

CAM SYSTEM “s” single

Id. No.
58435000

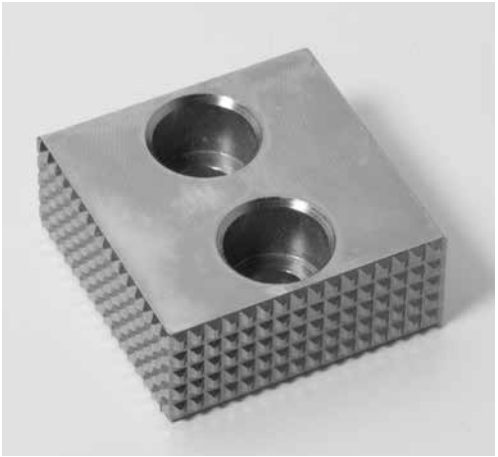

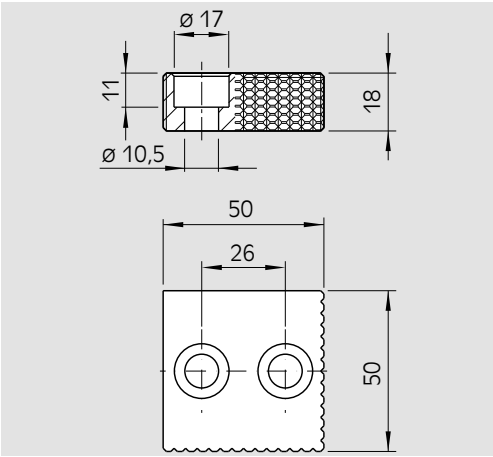

Fixed block CAM SYSTEM “s”

Id. No.
58430400

Key for CAM SYSTEM “s”

Id. No.
58430800

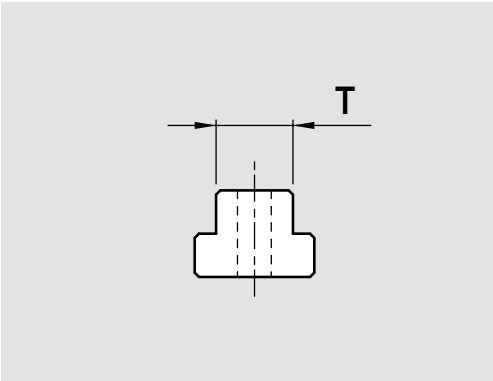

Pair of T-nuts with screw CAM SYSTEM “s”

Id. No.	T mm
58432593	14
58432594	16
58432595	18
58432596	20
58432597	22

CAM SYSTEM "s"

Eccentric self-locking clamping device

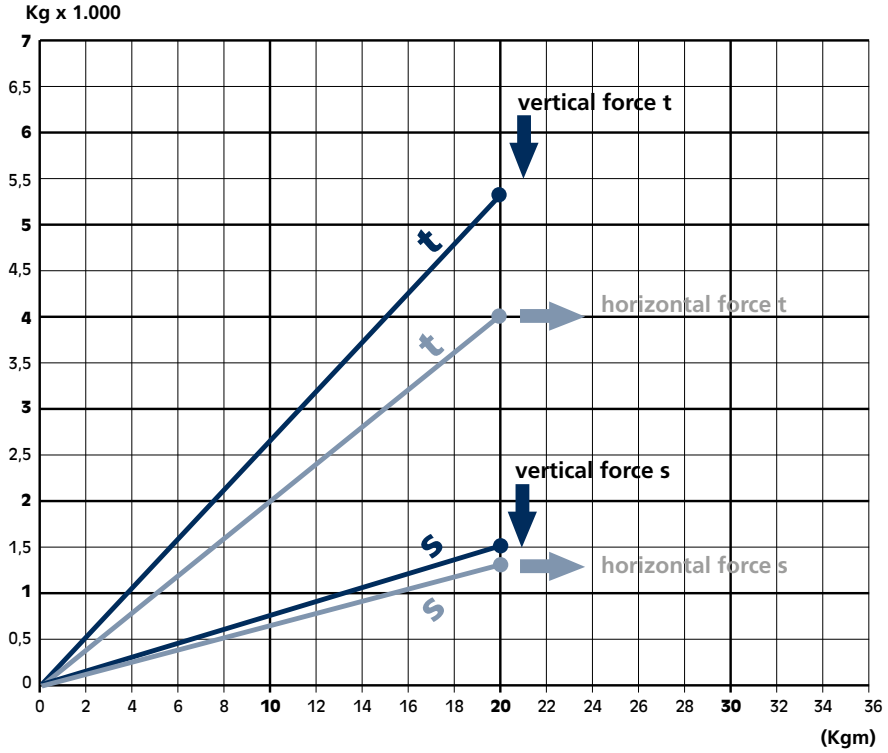

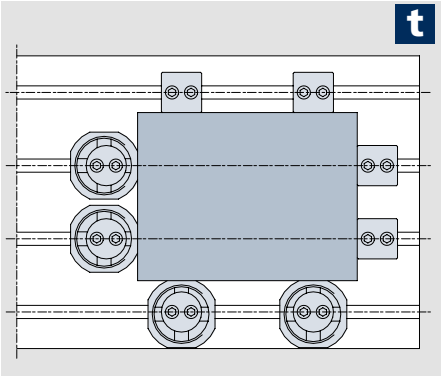

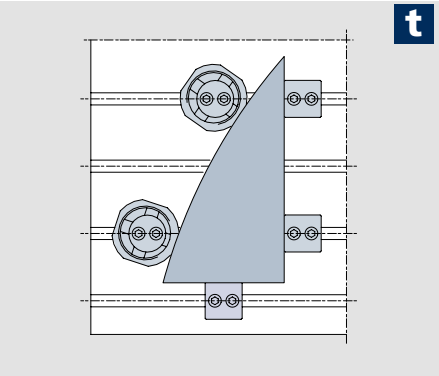

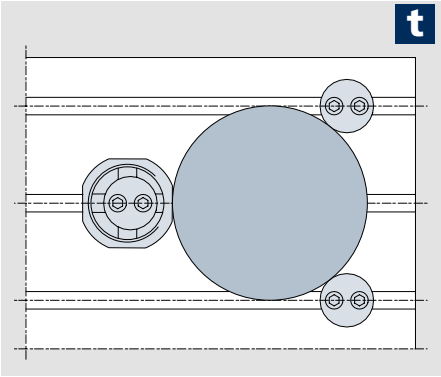

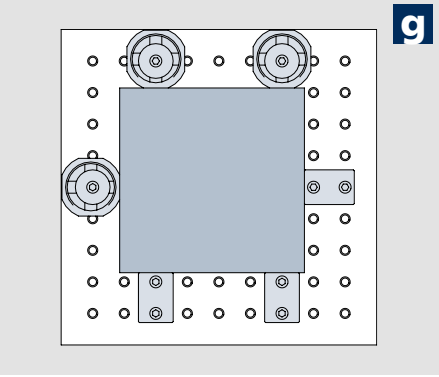

s

Id. No.	T mm
77584414	14
77584416	16
77584418	18
77584420	20
77584422	22

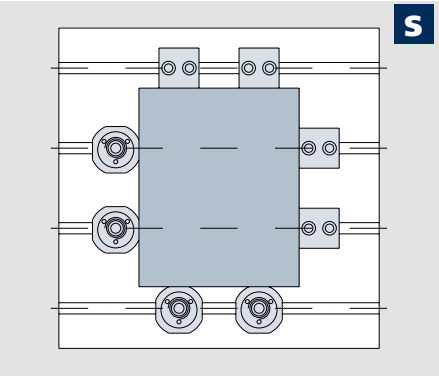

FORM HOLDING CLAMPS

For holding on external/internal form

FORM HOLDING CLAMPS

Page 8.4

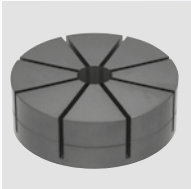

JAWS
for external Form Holding

Page 8.6

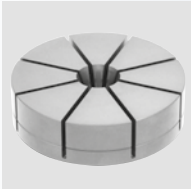

JAWS
for internal Form Holding

Page 8.8

TAPERED SCREWS
For internal Form Holding

Page 8.8

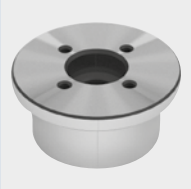

MOUNTING-ON-LATHE ADAPTERS

Page 8.11

FORM HOLDING CLAMPS
Wedge Style/Round

Page 8.12

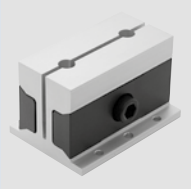

FORM HOLDING CLAMPS
Wedge Style/Square

Page 8.14

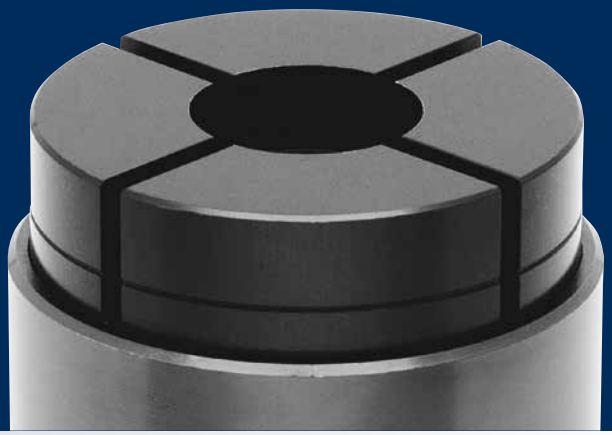

For holding on external / internal form!

Form Holding Clamps that have a machinable jaw to hold irregular-shaped workpieces.

FORM HOLDING CLAMPS

Two optional jaws clamping workpieces both on its external form and internal form.

For external form holding

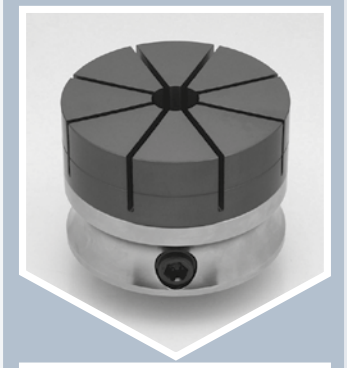

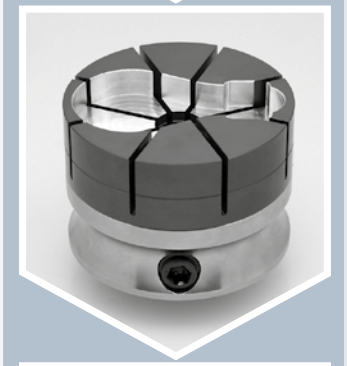

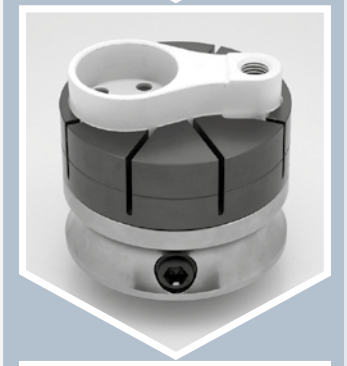

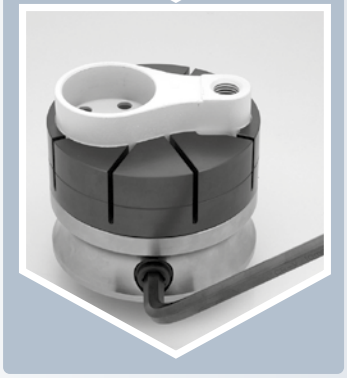

1 Prepare the jaw

2 Machine the jaw

3 Mount a workpiece

4 Tighten the cam cylinder

For internal form holding

CP125

Form Holding Clamps

Body	Pull Cylinder	Cam Cylinder
S45C Steel Electroless nickel plated	SCM415 Steel Carburized-hardened Black oxide finish	SCM435 Steel Quenched & tempered Black oxide finish

Note: Jaws must be ordered separately

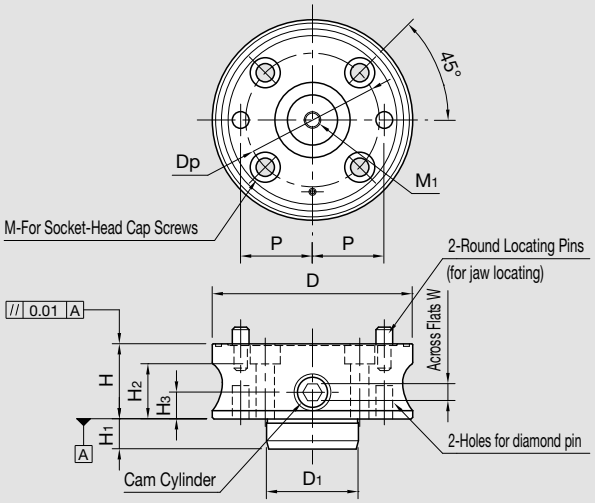

★Key Point
Can hold on external/internal form.

Part Number	D	H (± 0.01)	D_1 (g6)	H_1	M	H_2	Dp	P (± 0.02)	W	H_3	M_1
51992224	65	35	28	12	M 6	27	42	22	8	12	M 8x1.25
51992225	90	40	42	14	M 8	30	60	30	8	14	M10x1.5
51992226	120	45	55	18	M10	33	80	43	10	16	M10x1.5
51992227	160	50	63	24	M12	36	110	60	10	18	M12x1.75

Part Number	Allowable Screw Torque (N-m)	Weight (kg)
51992224	15	0,8
51992225	25	1,7
51992226	40	3,5
51992227	40	7,1

Proper Jaws					
For external Form Holding			For internal Form Holding		
Part Number	Clamping Force (kN)	Clamping Stroke	Part Number	Clamping Force (kN)	Clamping Stroke
51992228	4.5	ø 0.3	**51992232**	4.5	ø 0.3
51992229	7	ø 0.3	**51992233**	7	ø 0.3
51992230	10	ø 0.3	**51992234**	10	ø 0.3
51992231	12	ø 0.3	**51992235**	10	ø 0.3

Technical Information:

- Part locating repeatability: ±0.03
- Jaw locating repeatability: ±0.02

Notes:

Do not actuate clamping without a workpiece to avoid damage and deformation. Tightening with torque greater than the allowable screw torque will lower the durability of the jaw.

Furnished Parts:

- **51992224**: 1 pc. of Diamond Locating Pin
- **51992225**: 1 pc. of Diamond Locating Pin
- **51992226**: 1 pc. of Diamond Locating Pin
- **51992227**: 1 pc. of Diamond Locating Pin

Related Products:

- **51992228/...29/...30/...31**: Jaws for External Form Holding
- **51992232/...33/...34/...35**:
  Jaws for Internal Form Holding

Features:

Two optional jaws allow clamping a workpiece both on its external form and internal form.

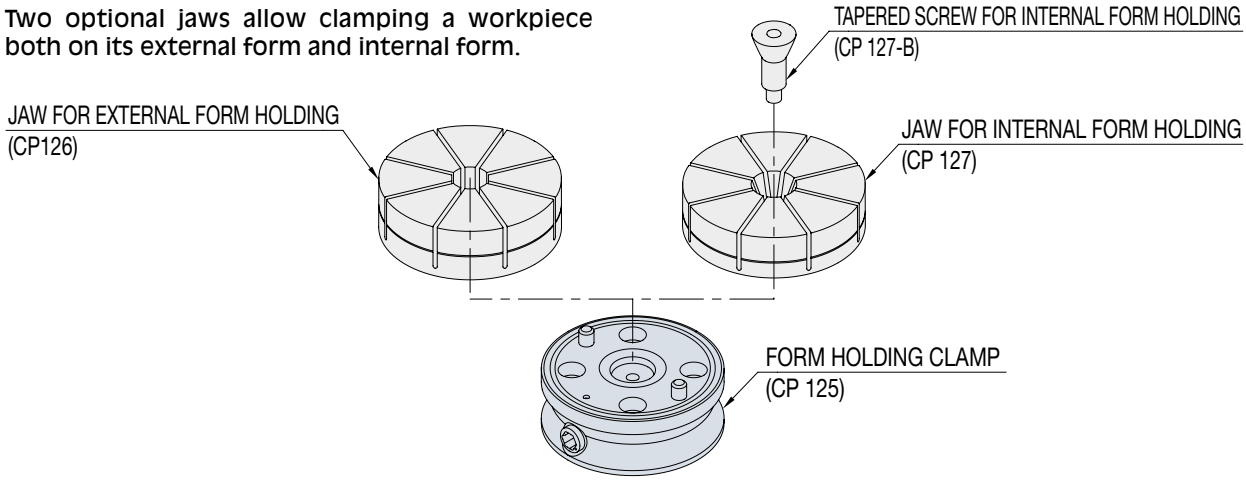

How to use:

Mounting-Hole Dimensions

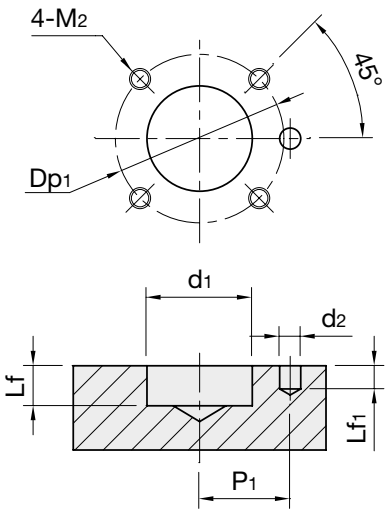

Part Number	d_1 H7	Lf	d_2 G7	Lf_1	P_1 ±0.02	M_2	Dp_1
51992224	28	13	6	6	22	M 6×1	42
51992225	42	15	8	8	30	M 8×1.25	60
51992226	55	19	10	11	43	M10×1.5	80
51992227	63	25	12	13	60	M12×1.75	110

Installation Instructions

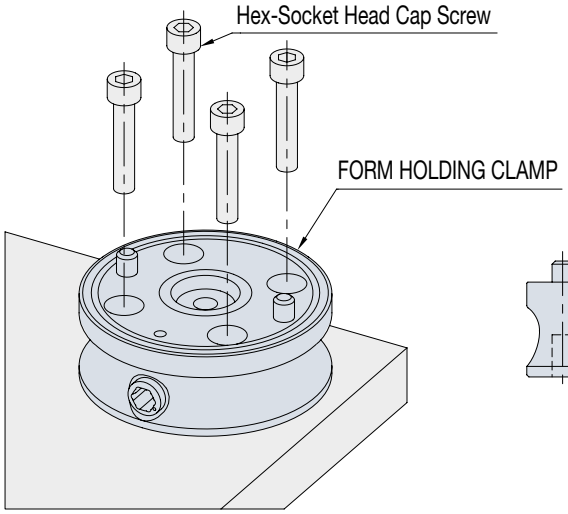

Insert an included diamond pin into the body for locating and secure the body to the fixture plate with 4 socket-head cap screws.

Note: Use either of the holes for diamond locating pin for your application.

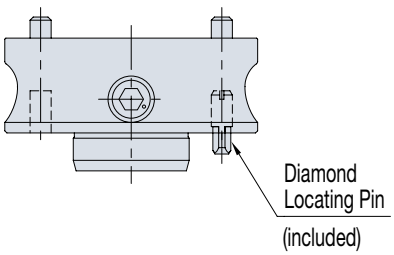

Dimensions of Diamond Locating Pin

Part Number	Diameter
51992224	ø 6h6
51992225	ø 8h6
51992226	ø 10h6
51992227	ø 12h6

CP126

JAWS for external Form Holding

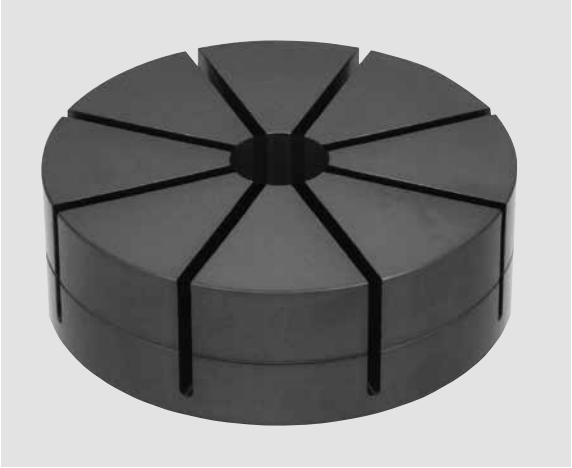

Jaw	Locking Ring
Aluminum (A7075) Blue	Steel (S45C) Black oxide finish

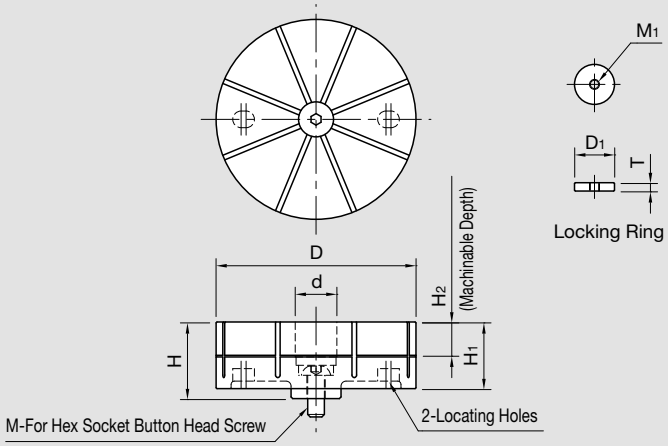

Part Number	D	d	H_1	H_2	M	H	M_1	D_1	T	Weight (kg)	Proper Clamps
51992228	65	21	25	10	M 8x20L Across Flats5	29	M5x0.8	20	4	0.2	51992224
51992229	90	25	35	15	M10x20L Across Flats6	40	M6x1	24	5	0.5	51992225
51992230	120	25	40	20	M10x25L Across Flats6	46	M6x1	24	5	1.1	51992226
51992231	160	29	45	25	M12x25L Across Flats8	52	M8x1.25	28	6	2.2	51992227

Furnished Parts:

- 1 pc. of O-ring
- 1 pc. of Locking Ring
- 1 pc. of Hex Socket Button Head Screw

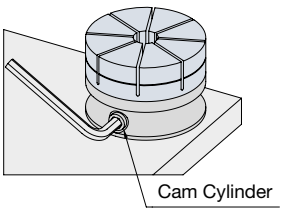

Features

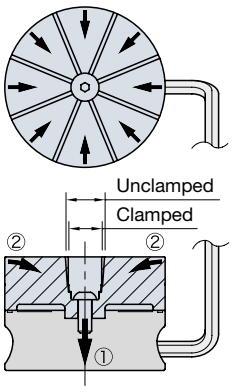

- The diaphram clamping mechanism allows securely clamping a part with 8 jaw sections.
- 0.15mm clamping stroke of each jaw section is perfect for clamping of lost-wax parts, die-cast parts, extruded parts, solid-drawn parts, prefinished parts, etc.

① When the cam cylinder is tightened, the central bottom part of the jaw is pulled down.

② At the same time the 8 jaw sections tilt toward the center to clamp the external form of a part.

How To Use

① Jaw Mounting

- Insert an O-ring to the groove on top surface of the Form Holding Clamp.
- Set a Jaw putting its locating holes onto the round locating pins and fix it with a hex socket button head screw.

Note: At jaw installation, ensure the cam cylinder is fully loosened by turning counterclockwise until it stops.

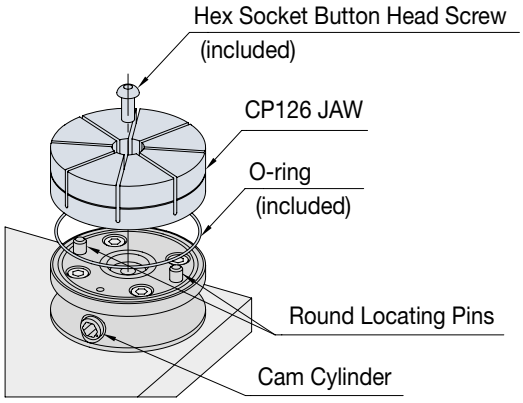

② Jaw Machining

(2-1) Set the locking ring in the jaw.
(Using a screw facilitates setting.)

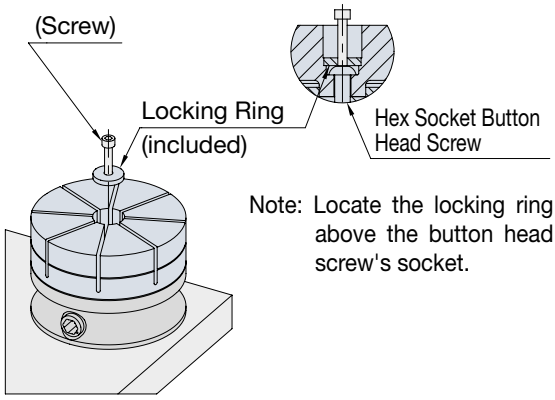

Note: Locate the locking ring above the button head screw's socket.

(2-2) Tighten the cam cylinder to clamp the locking ring.
(Recommended Tightening Torque: 15N-m)
After clamping the screw should be removed from the locking ring.

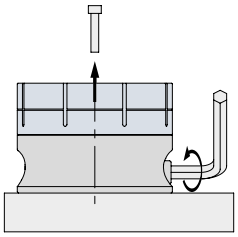

(2-3) Machine the jaw to the contours of a part.
Note: Do not machine the jaw deeper than allowed.

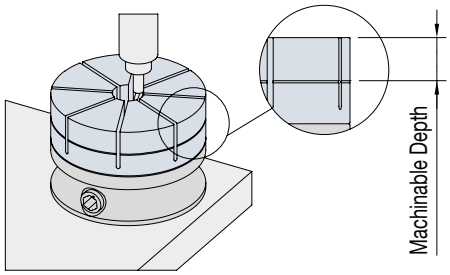

③ Workpiece Setting

- After machining loosen the cam cylinder to take out the locking ring.
- Mount a workpiece and tighten the cam cylinder for clamping.

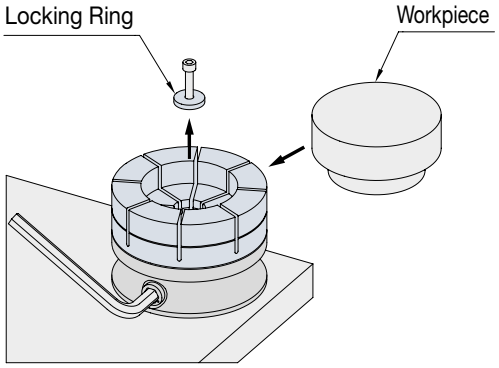

Performance Curve

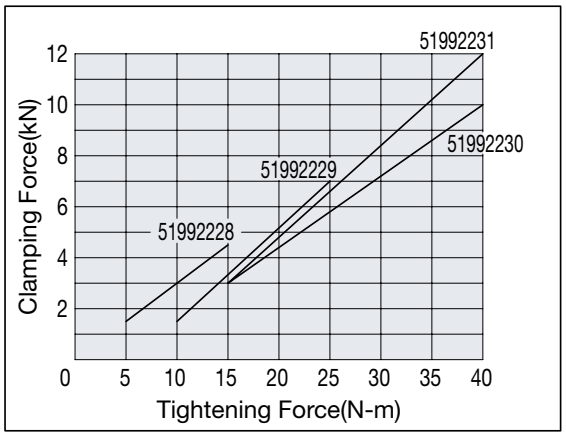

Notes

Do not actuate clamping without a workpiece to avoid damage and deformation.Tightening with torque greater than the allowable screw torque will lower the durability of the jaw.

CP127

JAWS for internal Form Holding

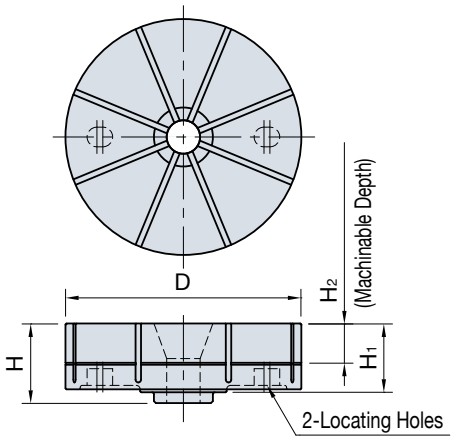

Jaw
Aluminum (A7075)
Silver

Part Number	D	H_1	H_2	H	Weight (kg)	Proper Clamps	Proper Screws
51992232	65	25	10	28.5	0.2	51992224	51992236
51992233	90	30	15	34.5	0.4	51992225	51992237
51992234	120	35	20	40.5	0.9	51992226	51992238
51992235	160	40	25	46.5	1.9	51992227	51992239

Furnished Parts:

- 1 pc. of O-ring

CP127-B

TAPERED SCREWS for internal Form Holding

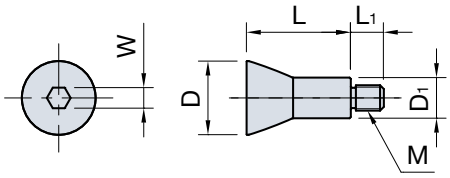

Body
SCM435 Steel
Quenced and tempered
Electroless nickel plated

Part Number	D	L	M	L_1	D_1	W	Weight (g)	Proper Jaws
51992236	22.5	29	M 8x1.25	10	13.2	6	50	51992232
51992237	27	35	M10x1.5	11	16	8	80	51992233
51992238	29	41	M10x1.5	13	16	8	100	51992234
51992239	33	47	M12x1.75	14	18	10	150	51992235

Features

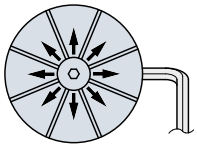

- The tapered screw expands the jaws towards eight directions to hold different
- irregularly-shaped parts securely.

0.15mm clamping stroke of each jaw section is perfect for clamping of lost-wax parts, die-cast parts, extruded parts, solid-drawn parts, prefinished parts, etc.

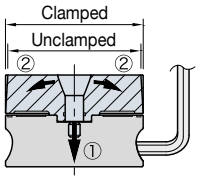

① When the cam cylinder is tightened, the tapered screw is pulled down.

② At the same time the 8 jaw sections expand to clamp the internal form of a part.

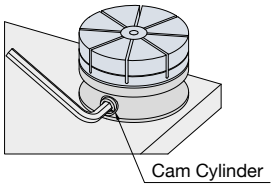

How To Use

①Jaw Mounting

- Insert an O-ring to the groove on top surface of the Form Holding Clamp.
- Set a Jaw putting its locating holes onto the round locating pins and fix it with a tapered screw.

Note: At jaw installation, ensure the cam cylinder is fully loosened by turning counterclockwise until it stops.

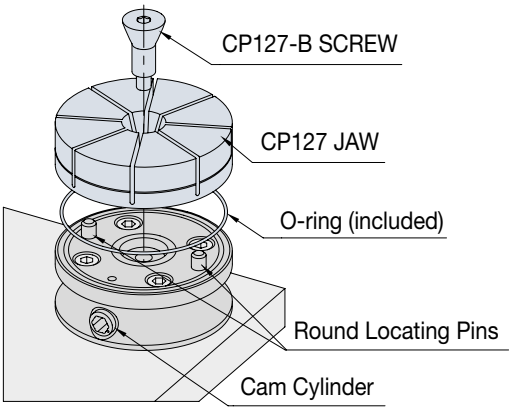

② Jaw Machining

(2-1) Loosen the cam cylinder fully and measure the dimension of the jaw for machining. Then tighten the cam cylinder until each jaw section expands 0.15mm.

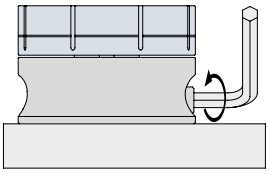

(2-2) Machine the jaw to the contours of a part.
Note: Do not machine the jaw deeper than allowed.

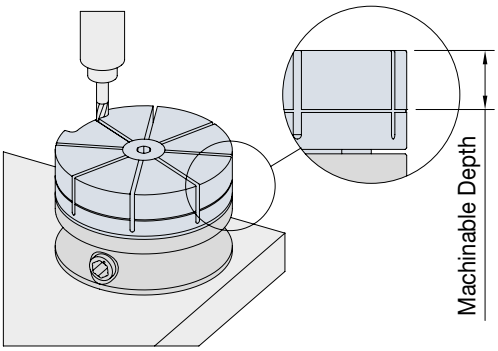

③ Workpiece Setting

After machining loosen the cam cylinder to set a part and tighten the cam cylinder again for clamping.

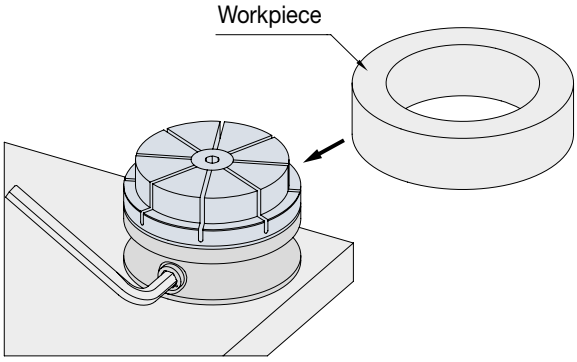

Performance Curve

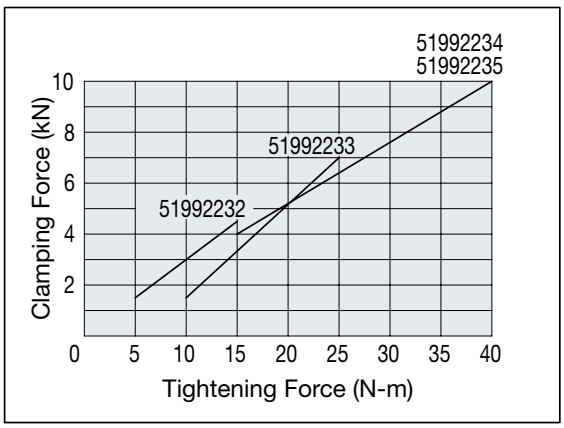

Notes

Do not actuate clamping without a workpiece to avoid damage and deformation. Tightening with torque greater than the allowable screw torque will lower the durability of the jaw.

FORM HOLDING CLAMPS

CLAMPING RANGE

Code	Description	Workpiece	Workpiece
51992212	FORM HOLDING CLAMPS CP 120	Ø 20	Ø 55
51992213	FORM HOLDING CLAMPS CP 120	Ø 24	Ø 80
51992218	ROUND FORM HOLDING CLAMPS CP 123	Ø 8.4	Ø 22
51992219	ROUND FORM HOLDING CLAMPS CP 123	Ø 12.4	Ø 40
51992220	SQUARE FORM HOLDING CLAMPS CP 124	Ø 8.4	Ø 22
51992221	SQUARE FORM HOLDING CLAMPS CP 124	Ø 8.4	Ø 22
51992222	SQUARE FORM HOLDING CLAMPS CP 124	Ø 12.4	Ø 40
51992223	SQUARE FORM HOLDING CLAMPS CP 124	Ø 12.4	Ø 40
51992228	JAWS FOR EXTERNAL FORM HOLDING CP 126	Ø 22	Ø 55
51992229	JAWS FOR EXTERNAL FORM HOLDING CP 126	Ø 26	Ø 80
51992230	JAWS FOR EXTERNAL FORM HOLDING CP 126	Ø 26	Ø 110
51992231	JAWS FOR EXTERNAL FORM HOLDING CP 126	Ø 30	Ø 150
51992232	JAWS FOR INTERNAL FORM HOLDING CP 127	Ø 30	Ø 64
51992233	JAWS FOR INTERNAL FORM HOLDING CP 127	Ø 34	Ø 89
51992234	JAWS FOR INTERNAL FORM HOLDING CP 127	Ø 36	Ø 119
51992235	JAWS FOR INTERNAL FORM HOLDING CP 127	Ø 40	Ø 159

CP122

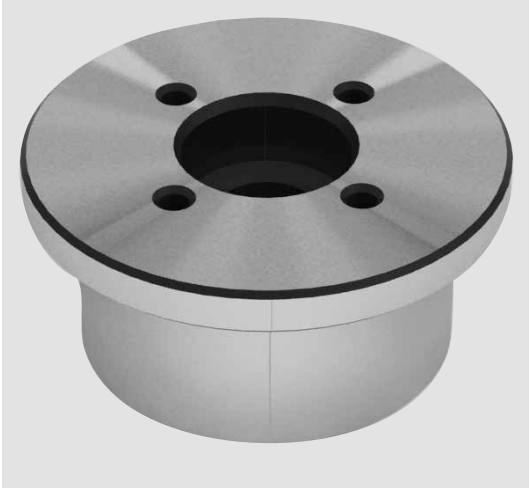

Body
Steel (SCM415) Black oxide finish Carburized-hardened

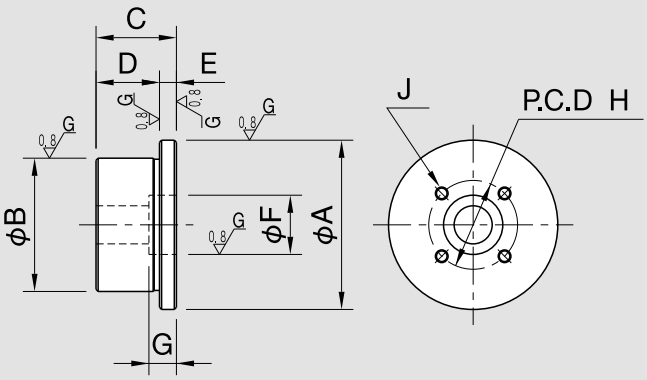

Part Number	A	B ±0,01	C	D	E ±0,01	F H7	G	H	J	Weight (g)
51992216	80	63	38	30	8	28	13	42	M6x1 12 deep	910
51992217	100	80	43	35	8	42	15	60	M8x1.25 16 deep	1.600

Form holding clamps
51992212
51992213

How To Use:

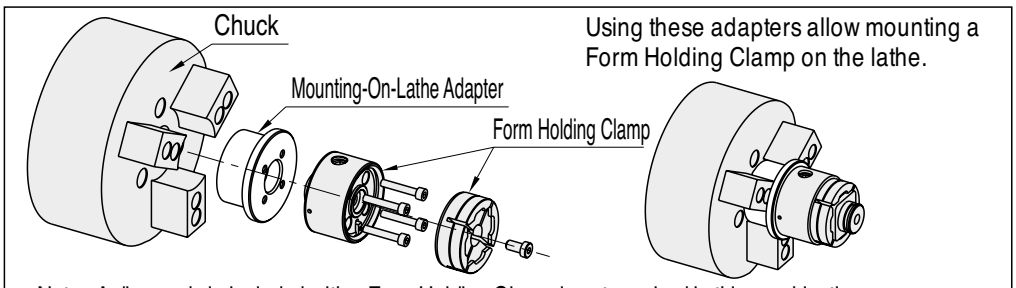

Note : A diamond pin included with a FormHolding Clamp is not required in this combination use.

CP123

FORM HOLDING CLAMPS Wedge Style/Round

Body	Wedge
Steel(S45C) Black oxide finished	Steel(S45C) Black oxide finished Quenched & tempered

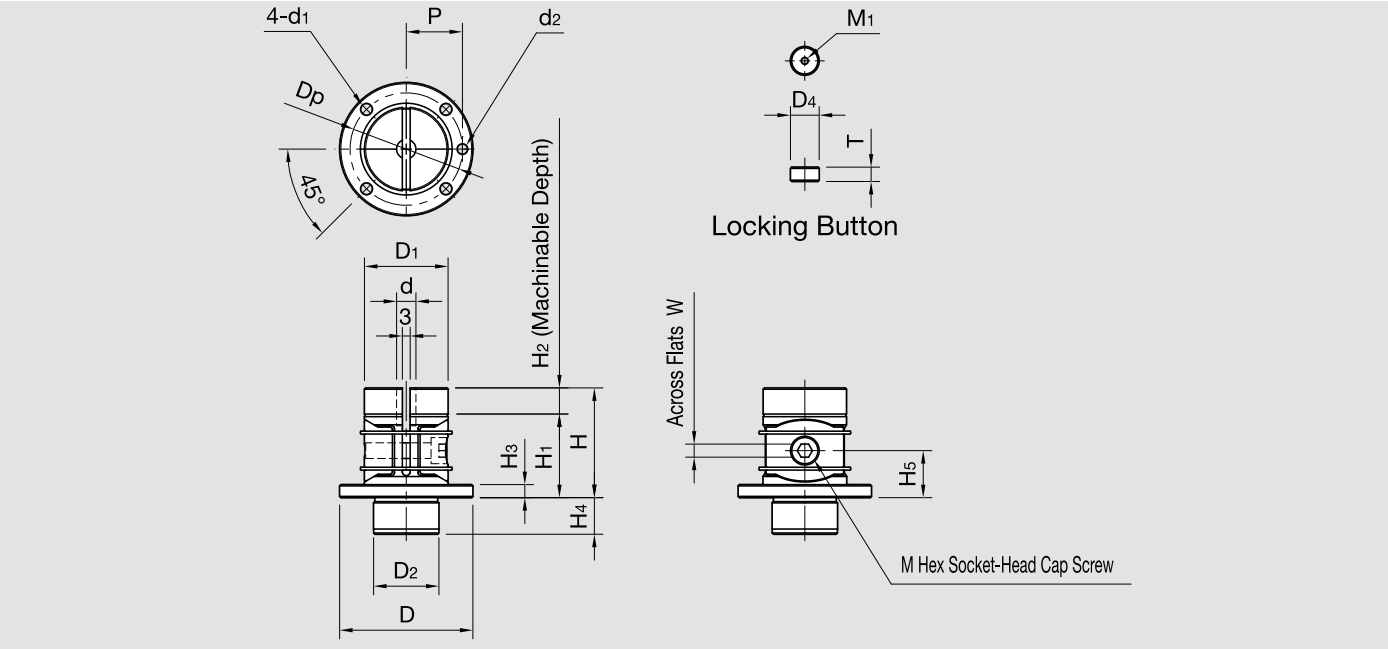

Part Number	D_1	d	H	H_2	D	H_1	H_3	D_2 (g7)	H_4	d_1	Dp	d_2	P
51992218	32	7.4	42	10	51	32	5	25	14	4.5	43	5	21.5
51992219	50	11.4	63	15	75	48	7	40	19	5.5	65	6	32.5

Part Number	M	w	H_5	M_1	D_4	T	Clamping Force (N)	Allowable Screw Torque (N-m)	Weight (kg)
51992218	M 6x1 -25L	5	18	M3x0.5	7	3.5	3,000	9	0.33
51992219	M 10x1.5 -35L	8	27	M3x0.5	11	5.5	7,000	42	1.2

Technical Information:

- Locating repeatability: ±0.08

Furnished Parts:

- 1 of locking button
- Spring pin
  (ø 5x10L for 51992218)
  (ø 6x14L for 51992219)

Notes:

- Do not tighten the clamping screw without the workpiece set to prevent damage and deformation.
- Do not machine the jaws beyond the machinable depth.

CP123

Features:

- When the clamp screw is tightened, both jaws tilt toward the center to clamp the circumference of the workpiece.
- The clamping stroke is 0.5mm.
- Cutting the machinable jaw to the contours of parts allows holding parts of different shapes.
- Simple and compact design permits multiple-parts holding arrangement.

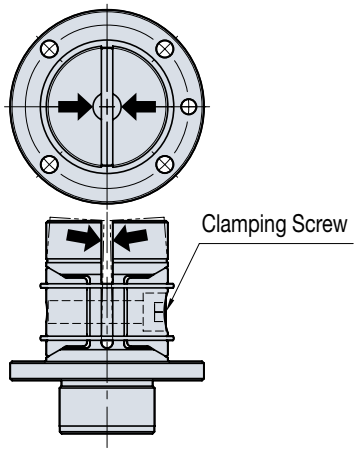

How To Use

Mounting-Hole Dimensions

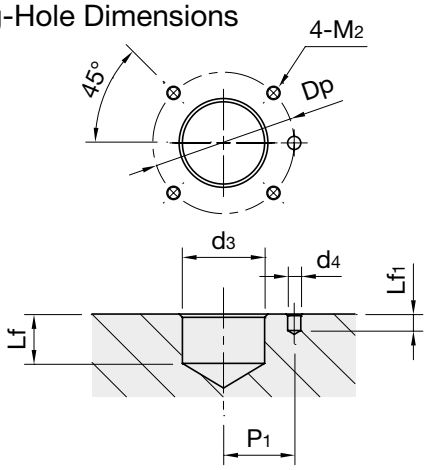

Part Number	d_3 (H7)	Lf	d_4 (+0.12)	Lf_1	P_1 (±0.05)	M_2	Dp
51992218	25	15	5	5	21.5	M4×0.7	43
51992219	40	20	6	7	32.5	M5×0.8	65

How To Machine Jaws

① Setting the locking button
Insert the locking button into the jaw, and then tighten the clamp screw to fasten the locking button.
(Using a cap screw facilitates setting)

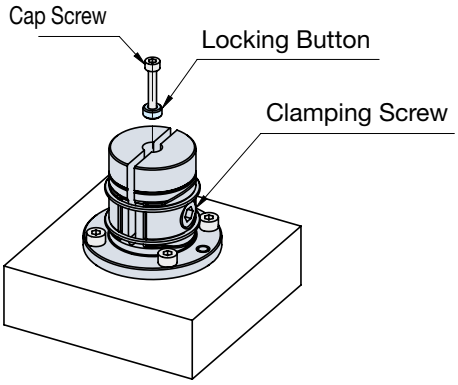

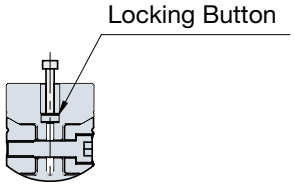

Note:The locking button must be inserted onto the bottom.

② Machining the jaw
Cut the jaw to the contours of the part.

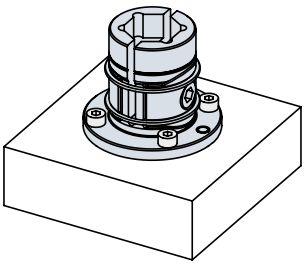

Note:Do not cut beyond the machinable depth.

③ Loading the part
Loosen the clamping screw to remove the locking button. Load the part and tighten the clamping screw for clamping.

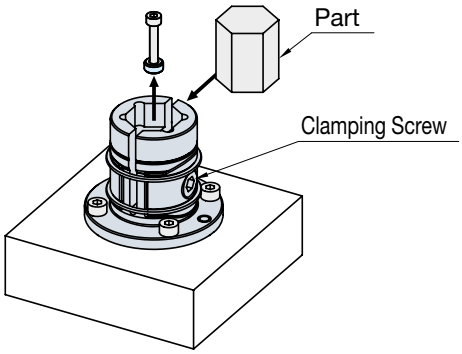

CP124

FORM HOLDING CLAMPS Wedge Style/Square

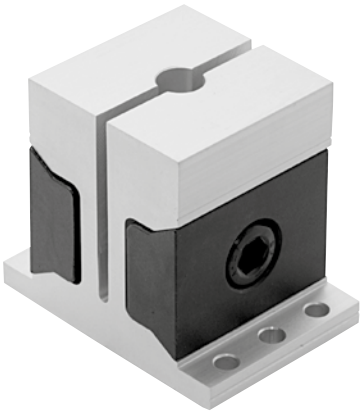

51992220 / 51992222

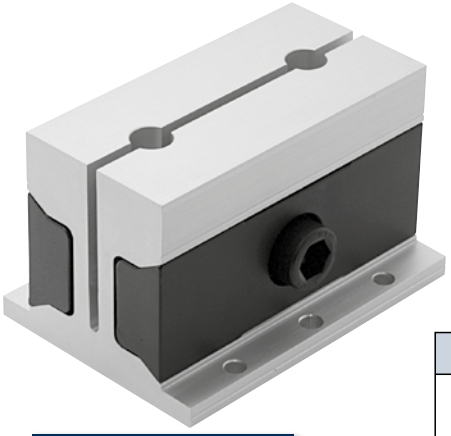

51992221 / 51992223

Body	Wedge
Aluminum(A6N01) Anodized Natural color	Steel(SCM440) Black oxide finished Quenched & tempered

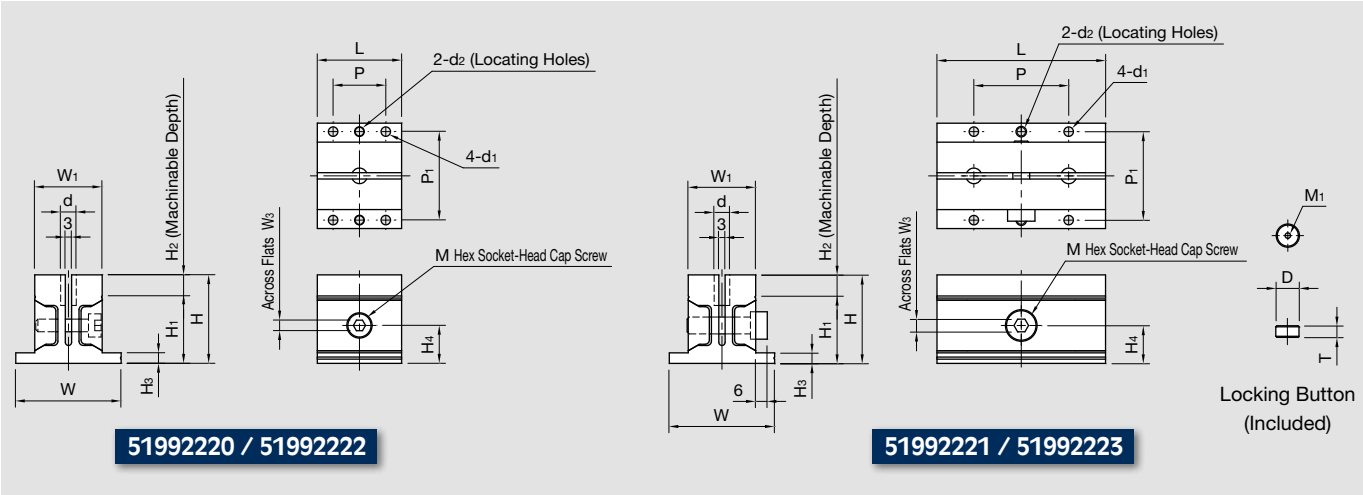

Part Number	W_1	d	L	H	H_2	W	H_3	H_1	D_2 (H7)	d_1	P	P_1	M
51992220	32	7.4	40	42	10	50	5	32	5	4.5	25	42	M 6x1 -25L
51992221	32	7.4	80	42	10	50	5	32	5	4.5	45	42	M 8x1.25 -30L
51992222	50	11.4	50	63	15	72	7	48	6	5.5	30	62	M10x1.5 -40L
51992223	50	11.4	100	63	15	72	7	48	6	5.5	58	62	M12x1.75 -45L

Part Number	W_3	H_4	M_1	D	T	Clamping Force (N)	Allowable Screw Torque (N-m)	Weight (kg)
51992220	5	18	M3x0.5	7	3.5	2,500	7.5	0.22
51992221	6	18	M3x0.5	7	3.5	2,500	14	0.42
51992222	8	27	M3x0.5	11	5.5	5,500	26	0.62
51992223	10	27	M3x0.5	11	5.5	5,500	46	1.29

Technical Information:

- Locating repeatability: ±0.08

Furnished Parts:

- 1 of locking button for 51992220/51992222
  2 of locking button for 51992221/51992223
- 2 of parallel pin (m6 tollerance)
  (ø 5x10L for 51992220/51992222)
  (ø 6x15L for 51992221/51992223)

Notes:

- Do not tighten the clamping screw without the workpiece set to prevent damage and deformation.
- Do not machine the jaws beyond the machinable depth.

Features:

- When the clamp screw is tightened, both jaws tilt toward the center to clamp the circumference of the workpiece
- The clamping stroke is 0.5mm.
- Cutting the machinable jaw to the contours of parts allows holding parts of different shapes.
- Simple and compact design permits multiple-parts holding arrangement.

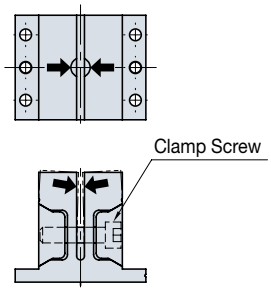

Mounting-Hole Preparation

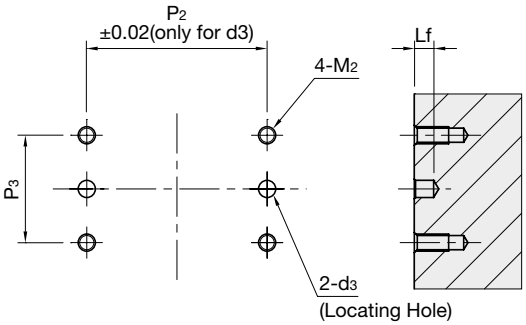

Use the included parallel pin for locating.

Part Number	d_3 (H7)	Lf	M_2	P_2	P_3
51992220	5	5	M4×0.7	42	25
51992221	5	5	M4×0.7	42	45
51992222	6	8	M5×0.8	62	30
51992223	6	8	M5×0.8	62	58

How To Machine Jaws

① Setting the locking button
Insert the locking button into the jaw,
and then tighten the clamp screw to fasten the locking button.
(Using a cap screw facilitates setting)

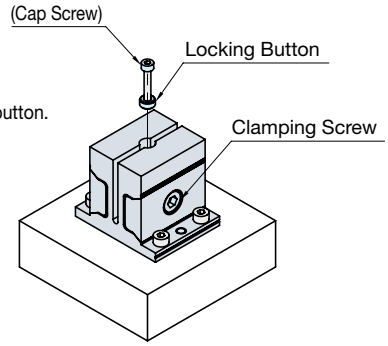

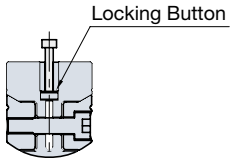

Note:The locking button must be inserted onto the bottom.

② Machining the jaw
Cut the jaw to the contours of the part.

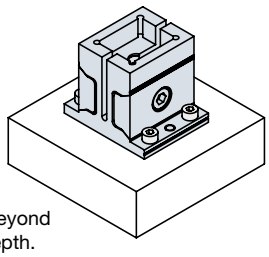

Note:Do not cut beyond the machinable depth.

③ Loading the part
Looen the clamping screw to remove the locking button. Load the part and tighten the clamping screw for clamping.

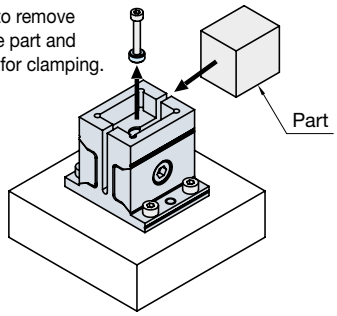

Application Examples

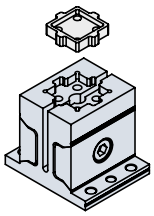

Single-station mode
on the short-type clamp

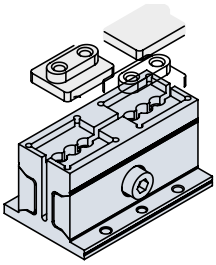

Dual-station mode
on the long-type clamp

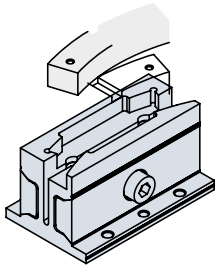

Single-station mode
on the long-type clamp

NOTES

VARI CLAMP

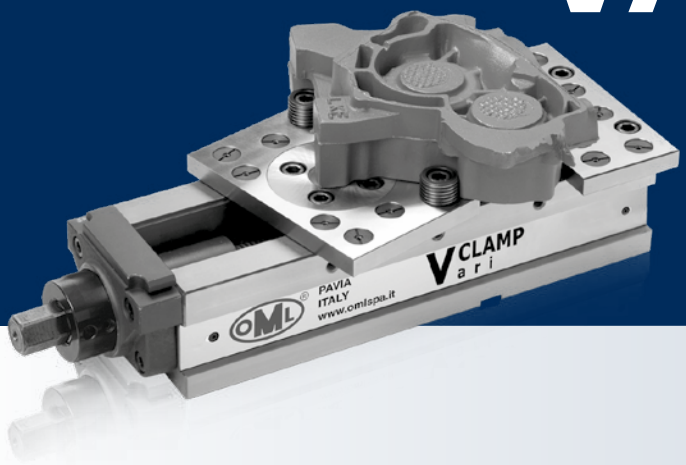

Clamping vise

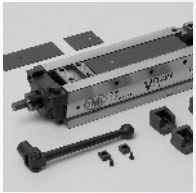

Vari CLAMP
Clamping vise without mechanical/ mechanical clamping force multiplier
Page 9.1.4

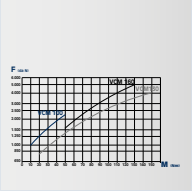

Vari CLAMP
Clamping force diagrams
Page 9.1.17

Vari CLAMP
Accessories
Page 9.1.6

Vari CLAMP
Working examples
Page 9.1.18

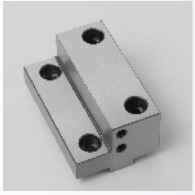

Vari CLAMP
spare parts
Page 9.1.10

Movable jaw "grip"

Gripper

Floating jaw "grip"

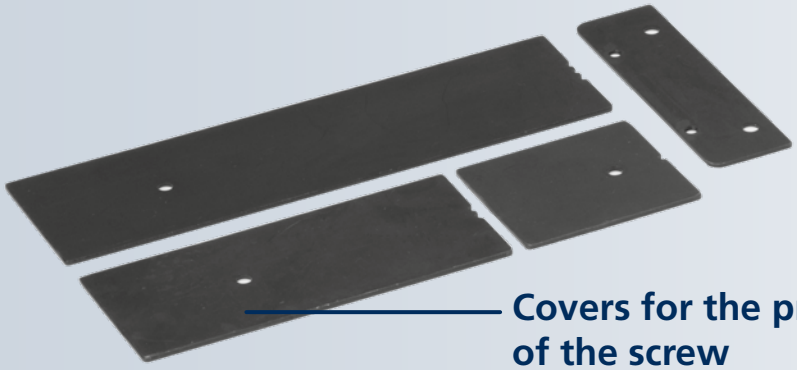

Covers for the protection of the screw

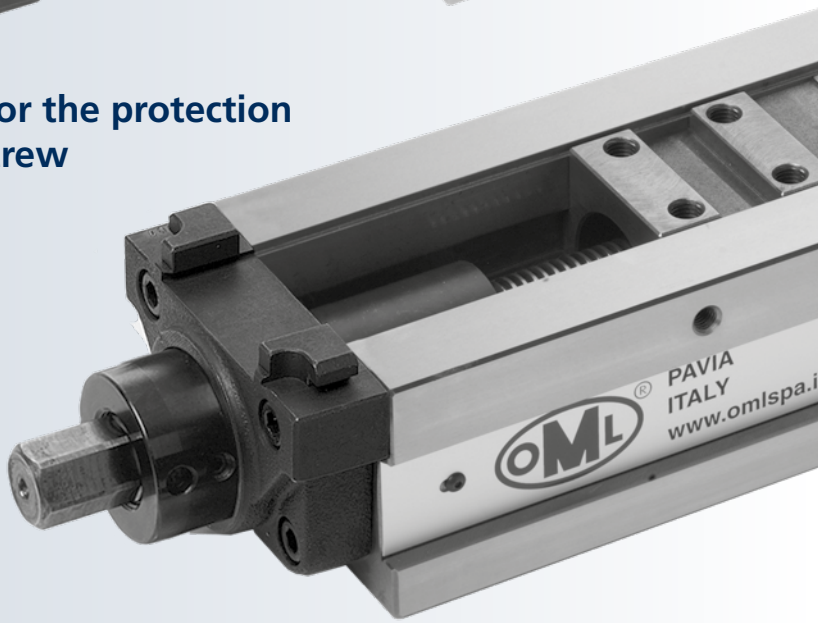

Movable square block jaw

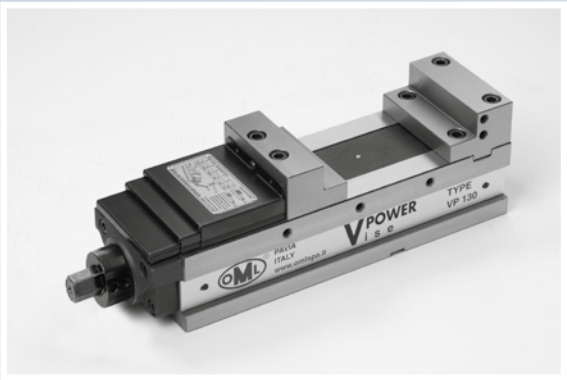

VARI CLAMP

All the features of the vise V-Power are further increased in the version Vari-Clamp.

1. Super-low design both of stationary jaw and movable jaw is suitable for clamping thinner workpieces to increase heavy duty cutting capacity and precision of processing.

2. Movable jaw is designed by balance mechanism, and there are many kinds of gripper onto the jaw in order to suit the requirement for various workpieces and difficult clamping shapes.

3. Balance jaw is designed by balance mechanism, its function is able to clamp easily slanting or not smooth surface for rough material, casting material and slanting rough surface after processed by sawing machine.

4. Vari-Clamp allows clamping of irregular, round, elliptic, rectangular, irregular-curviform, step workpieces and slanting workpieces of difficult clamping using the balance mechanism of movable jaws and the different shapes of gripper to perform well-done the clamping.

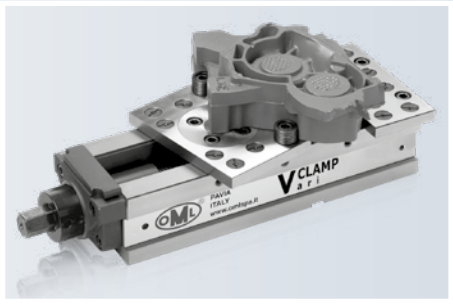

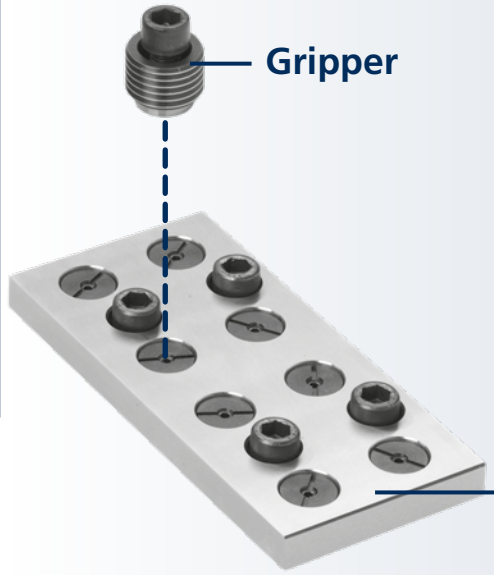

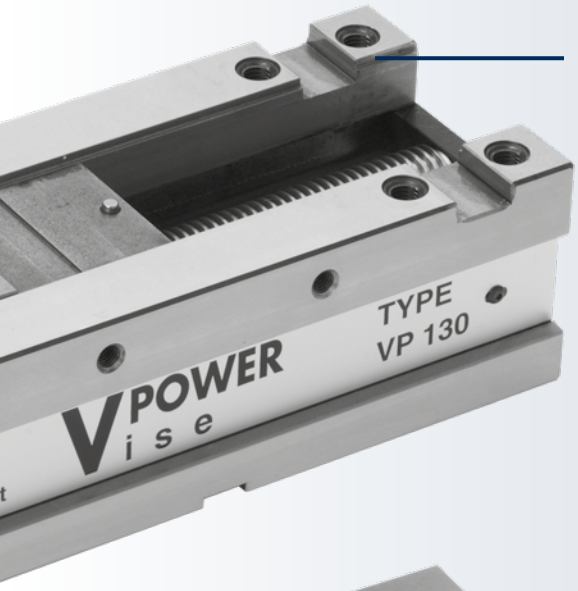

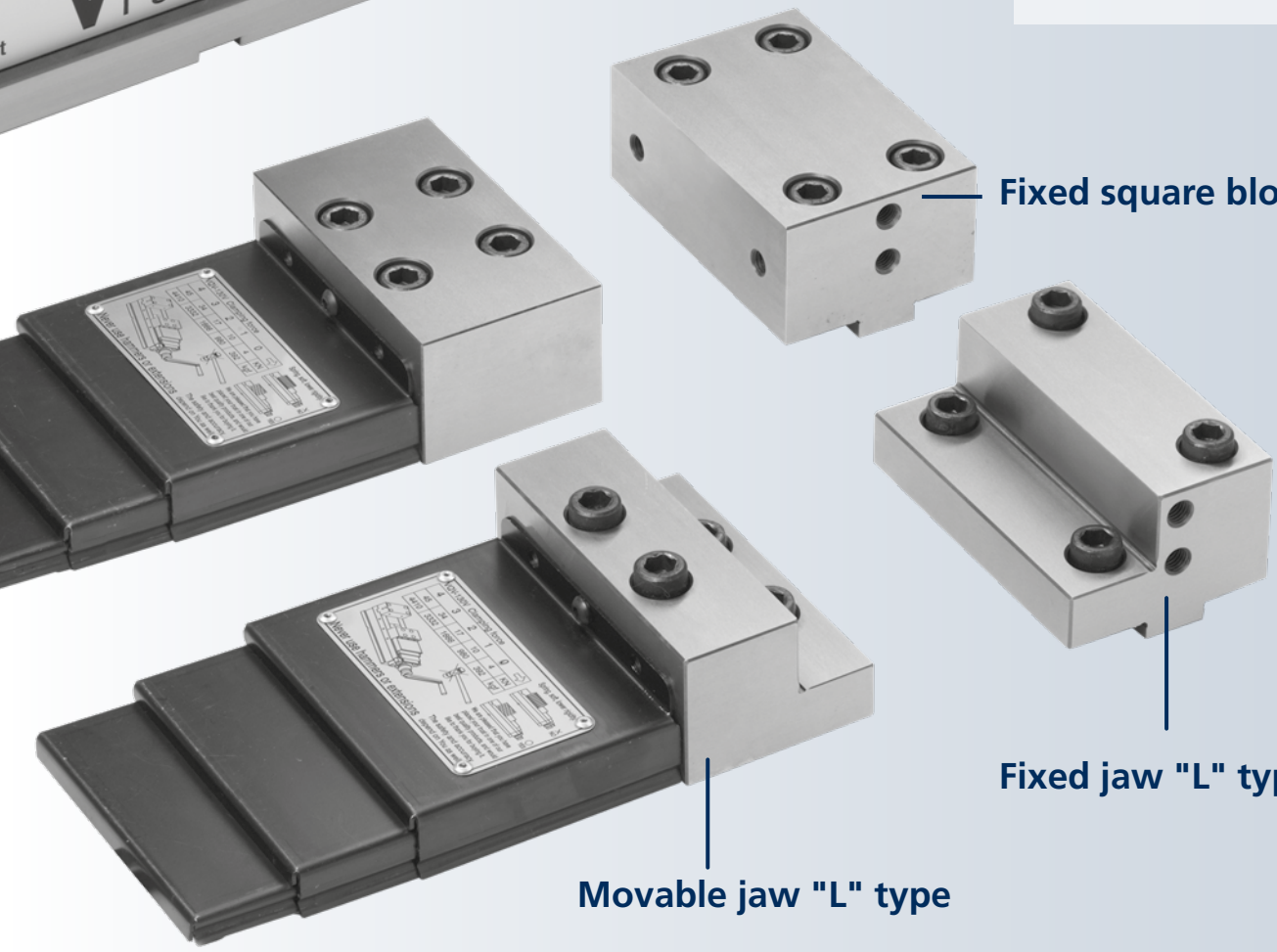

Vari CLAMP

Clamping vise without mechanical/mechanical clamping force multiplier

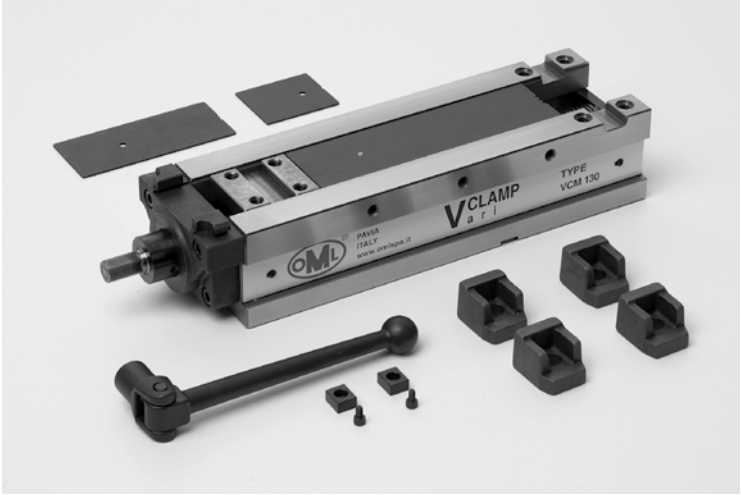

Mechanical set base VCM

Set base Vise Power complete with:
- wrench
- cover for the protection of the screw
- 2 positioning keys with screw
- 4 clamps

Id.No.	for type
77 58 90 60	VCM 100
77 58 91 60	VCM 130
77 58 92 60	VCM 160

"L" jaw kit

Id.No.	for type
58 90 71 10	100
58 91 71 10	130
58 92 71 10	160

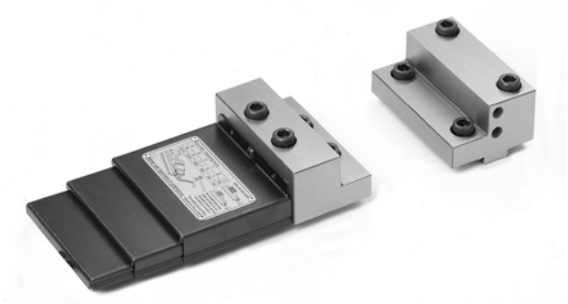

Square block jaw kit

Id.No.	for type
58 90 72 10	100
58 91 72 10	130
58 92 72 10	160

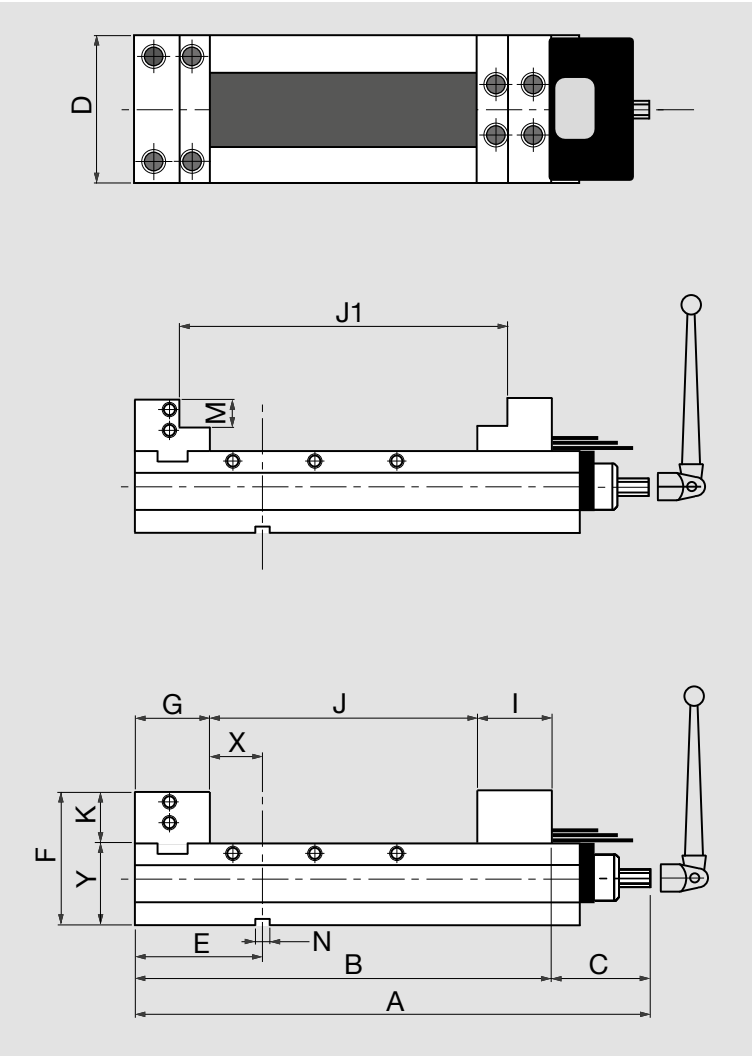

type	A mm	B mm	C mm	D mm	E mm	F mm	G mm	J mm	J1 mm	I mm	K mm	M mm	N mm	X mm	Y mm	max clamping force KN (kgf)	weight kg
VCM 100	398	300		101	124	130	78	155	213	64	45	25		45	85	20 (2.000)	22
VCM 130	508	410	98	131	149	147	83	250	315	74	52	30	18	65	95	40 (4.000)	40
VCM 160	573	475		161	152	160	86	300	370	86	55	30		65	105	50 (5.000)	62

Clamping vise without mechanical/mechanical clamping force multiplier

Vari CLAMP

Mechanical set base VCM

Set base Vise Power complete with:
- wrench
- cover for the protection of the screw
- 2 positioning keys with screw
- 4 clamps

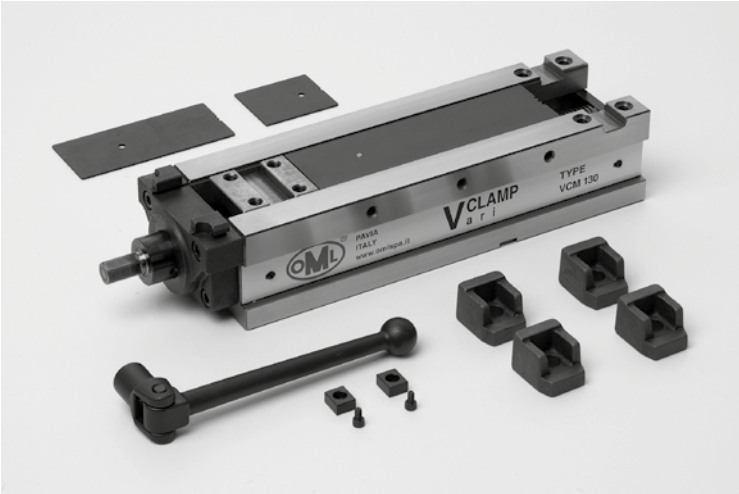

Id.No.	for type
77 58 90 60	VCM 100
77 58 91 60	VCM 130
77 58 92 60	VCM 160

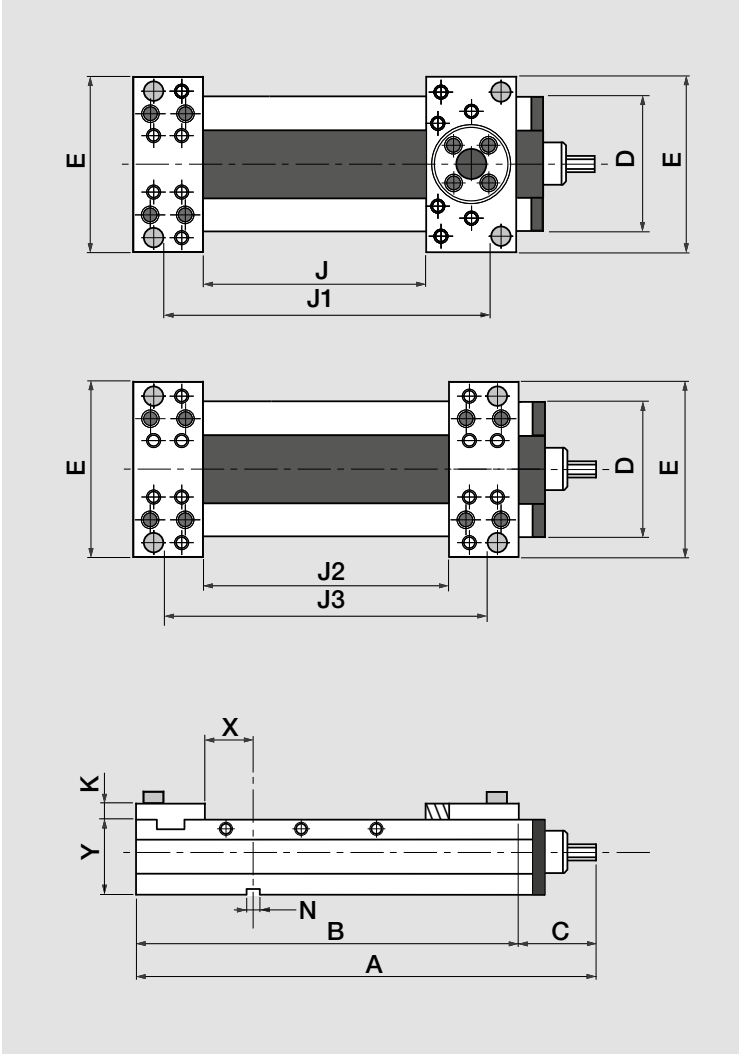

Gripper jaw kit

Id.No.	for type
58 90 73 10	100
58 91 73 10	130
58 92 73 10	160

Floating gripper jaw kit

Id.No.	for type
58 90 73 20	100
58 91 73 20	130
58 92 73 20	160

type	A mm	B mm	C mm	D mm	E mm	J mm	J1 mm	J2 mm	J3 mm	K mm	N mm	X mm	Y mm	max clamping force KN (kgf)	weight kg
VCM 100	398	300		101	160	100	220	150	220	17		51	85	20 (2.000)	18,5
VCM 130	508	410	98	131	190	180	320	210	320	17	18	60	95	40 (4.000)	33,5
VCM 160	573	475		161	220	220	380	280	380	22		64	105	50 (5.000)	51,5

Set of 4 grippers h11 smooth

Id.No. **58 90 61 14**

Set of 4 grippers h11 serrated

Id.No. **58 90 61 24**

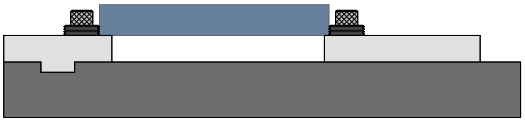

Set of 4 grippers h19 smooth

Id.No. **58 90 62 14**

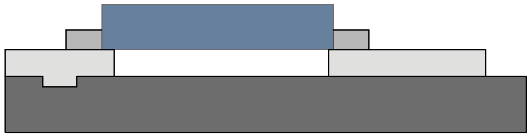

Set of 4 grippers h19 serrated

Id.No. **58 90 62 24**

Set of 4 grippers h24 smooth

Id.No. **58 90 63 14**

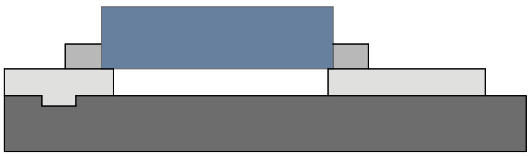

Set of 4 grippers h24 serrated

Id.No. 58 90 63 24

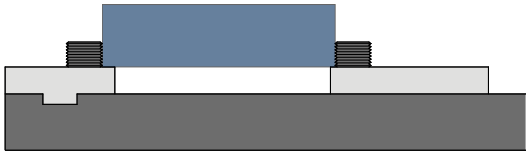

Set of 4 grippers h11 smooth-serrated

Id.No. 58 90 64 14

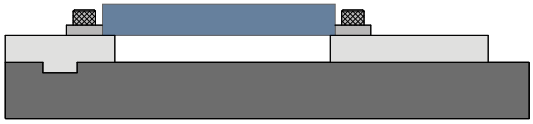

Set of 4 soft grippers h25 smooth

Id.No. 58 90 65 14

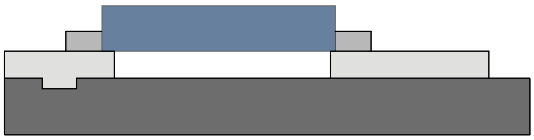

Set of 4 grippers h50 serrated with adjustable screw

Id.No. 58 90 67 24

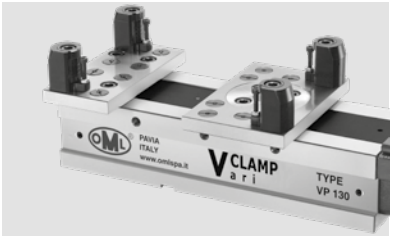

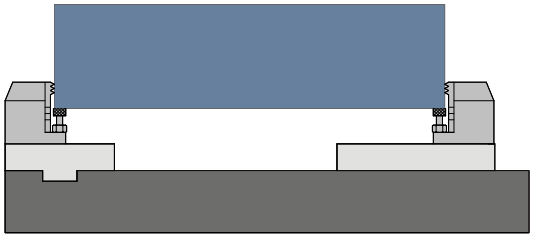

Set of 4 grippers h50 smooth with step

Id.No. 58 90 68 14

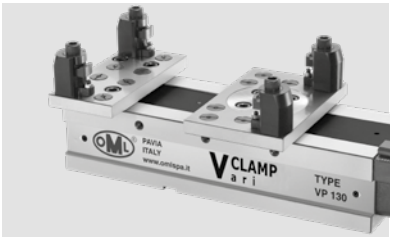

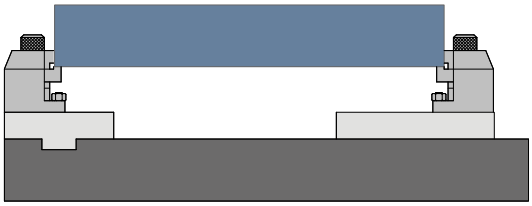

Set of 4 grippers h50 serrated with step

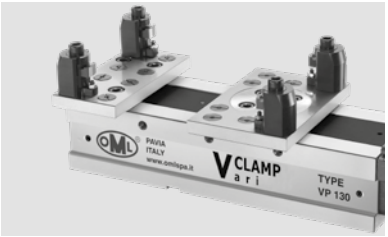

Id.No. **58 90 68 24**

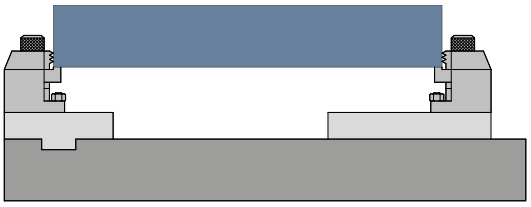

Set of 4 grippers h25 smooth with adjustable screw

Id.No. **58 90 66 14**

Set of 4 grippers h25 serrated with adjustable screw

Id.No. **58 90 66 24**

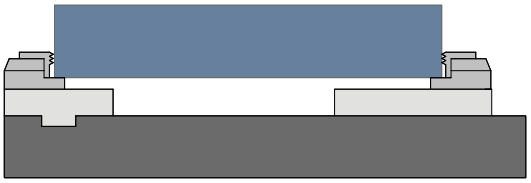

Set of 4 grippers h50 smooth with adjustable screw

Id.No. **58 90 67 14**

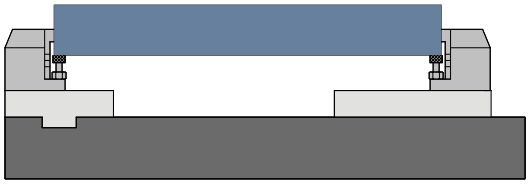

Kit of 14 sets of 4 grippers

Id.No.	58 90 60 09	for type	VCP 100 - VCP 130 -VCP 160

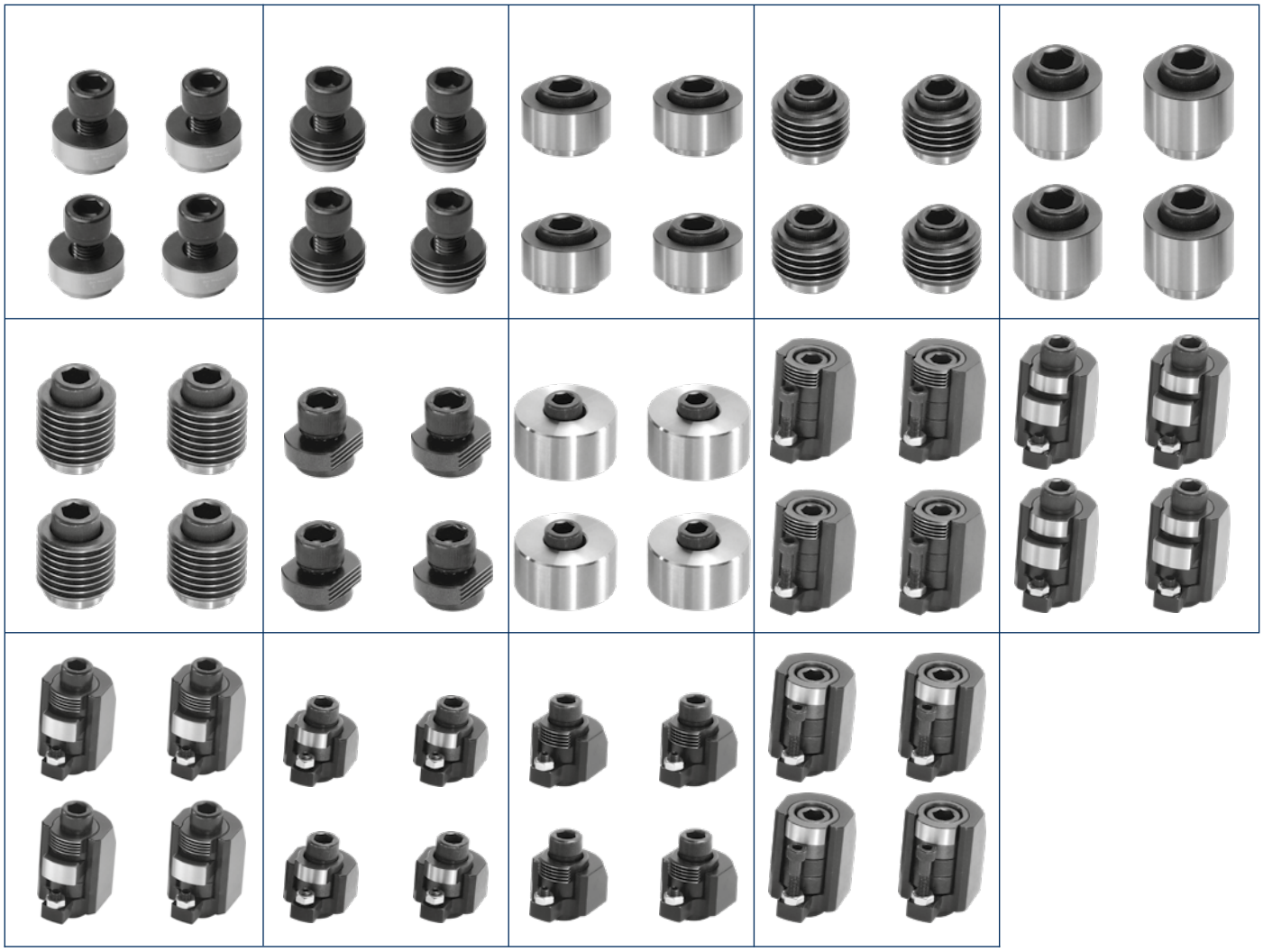

Fixed jaw " L" type

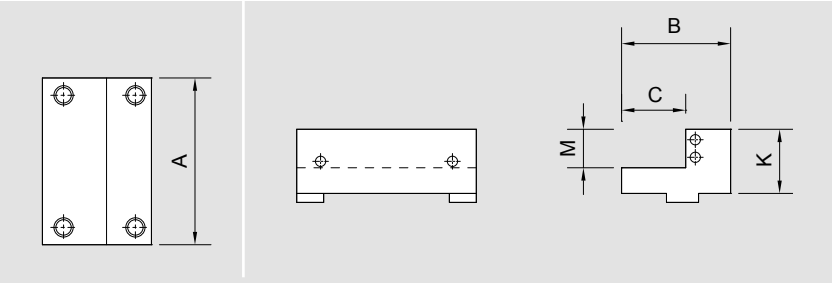

Id.No.	type	A mm	B mm	C mm	K mm	M mm	weight kg
58 90 02 10	100	100	78	32,5	45	25	2
58 91 02 10	130	130	83	35	52	30	3
58 92 02 10	160	160	86	35	95	30	4,2

Moveable jaw " L" type (with expanding chip cover)

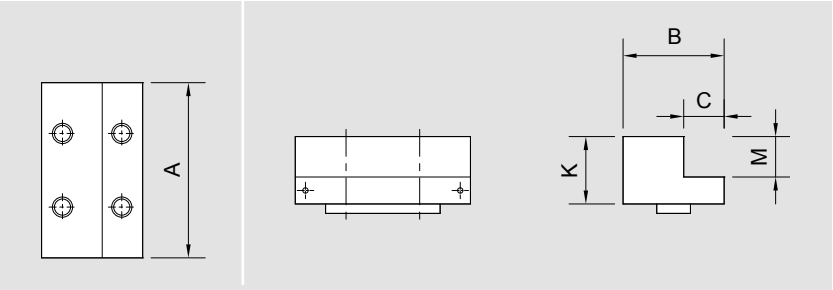

Id.No.	type	A mm	B mm	C mm	K mm	M mm	weight kg
58 90 03 10	100	100	64	26	45	25	1,5
58 91 03 10	130	130	74	30	52	30	2,8
58 92 03 10	160	160	86	35	55	30	4,2

Fixed square block jaw

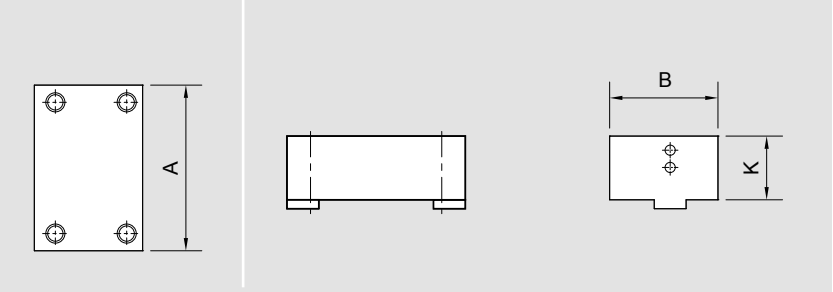

Id.No.	type	A mm	B mm	K mm	weight kg
58 90 02 20	100	100	78	45	3
58 91 02 20	130	130	83	52	4
58 92 02 20	160	160	86	55	6

Moveable square block jaw (with expanding chip cover)

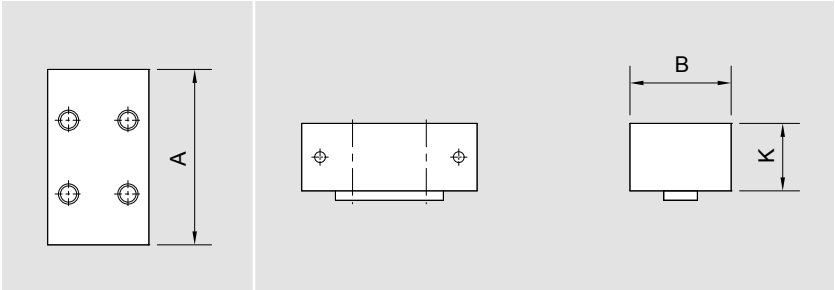

Id.No.	type	A mm	B mm	K mm	weight kg
58 90 03 20	100	100	64	45	2,5
58 91 03 20	130	130	74	52	4,5
58 92 03 20	160	160	86	55	6

Fixed square block jaw gripper

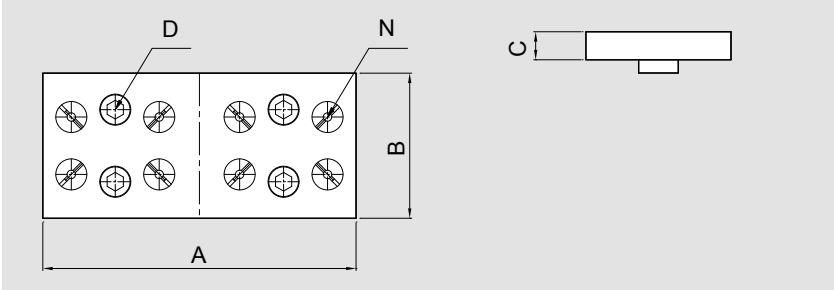

Id.No.	type	A mm	B mm	C mm	D mm	N	weight kg
58 90 02 30	100	160	73	22	M10x25L	6	1,3
58 91 02 30	130	190	88	22	M12x30L	8	2,2
58 92 02 30	160	220	88	22	M14x30L	8	3,0

Moveable jaw gripper

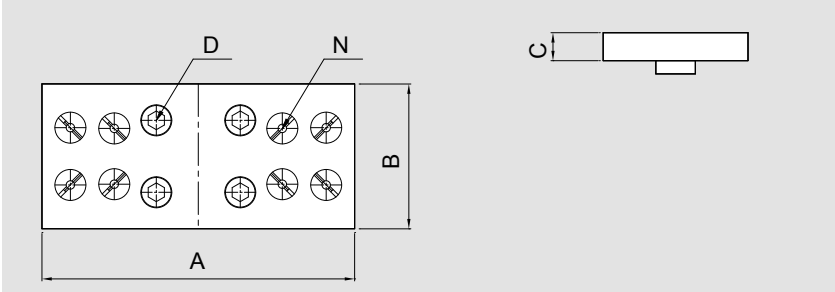

Id.No.	type	A mm	B mm	C mm	D mm	N	weight kg
58 90 03 30	100	160	64	22	M10x25L	6	1,4
58 91 03 30	130	190	88	22	M12x30L	8	2,2
58 92 03 30	160	220	88	22	M14x30L	8	3,3

Floating jaw gripper

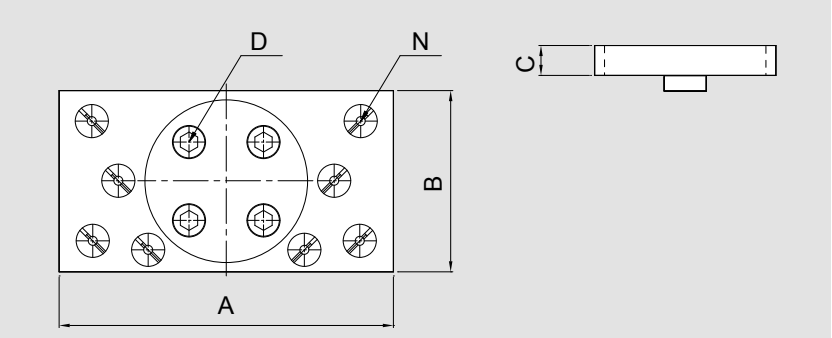

Id.No.	type	A mm	B mm	C mm	D mm	N	weight kg
58 90 03 40	VCP 100	160	88	22	M10x25L	6	2,2
58 91 03 40	VCP 130	190	103	22	M12x30L	8	3,2
58 92 03 40	VCP 160	220	128	22	M14x30L	8	5,7

Gripper h11 smooth

Id.No.
58 90 61 10

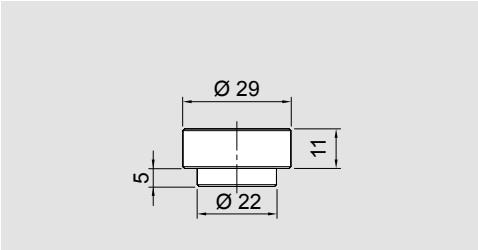

Gripper h11 serrated

Id.No.
58 90 61 20

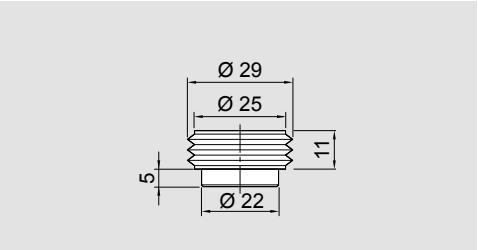

Gripper h19 smooth

Id.No.
58 90 62 10

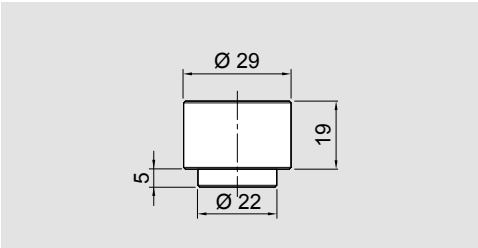

Gripper h19 serrated

Id.No.
58 90 62 20

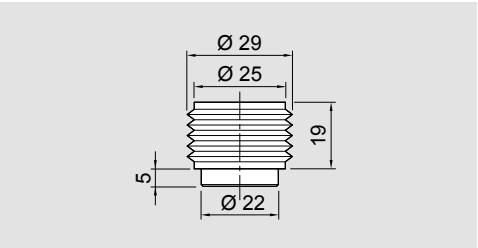

Gripper h24 smooth

Id.No.
58 90 63 10

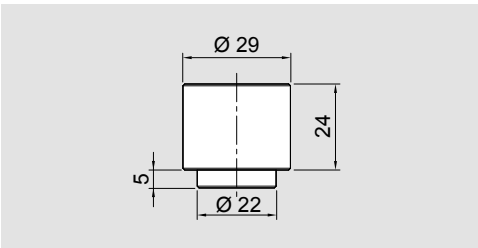

Gripper h24 serrated

Id.No.
58 90 63 20

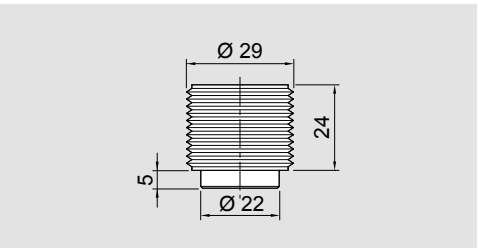

Gripper h11 smooth-serrated

Id.No.
58 90 64 10

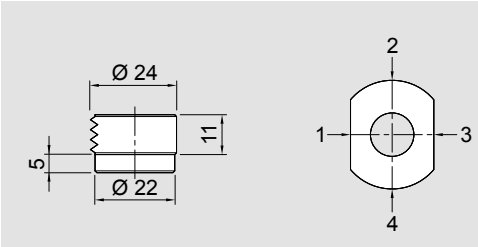

Soft gripper h25 smooth

Id.No.
58 90 65 10

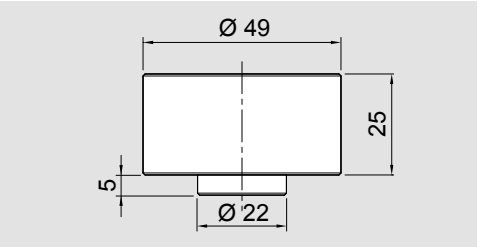

Gripper h50 serrated with adjustable screw

Id.No.
58 90 67 20

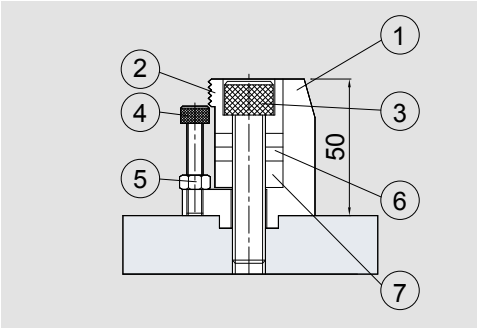

Pos.	Id.No.	Description
1	58 90 51 20	Body
2	58 90 52 20	Serrated gripper
3	71 11 31 09	Screw TCEI M12x60 12.9
4	71 11 30 47	Screw TCEI M6x30 12.9
5	71 15 02 06	Nut M6
6	58 90 54 10	Washer (5 mm)
7	58 90 54 20	Washer (10 mm)

Gripper h50 smooth with step

Id.No.
58 90 68 10

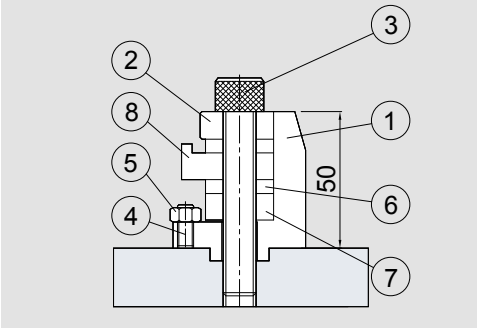

Pos.	Id.No.	Description
1	58 90 51 20	Body
2	58 90 53 10	Smooth gripper
3	71 11 31 10	Screw TCEI M12x70 12.9
4	71 11 21 24	Grub screw M6x16
5	71 15 02 06	Nut M6
6	58 90 54 10	Washer (5 mm)
7	58 90 54 20	Washer (10 mm)
8	58 90 55 10	Step washer

1

2

3

4

5

6

7

8

Gripper h50 serrated with step

Id.No.
58 90 68 20

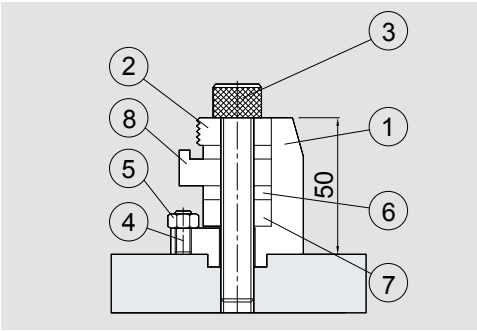

Pos.	Id.No.	Description
1	58 90 51 20	Body
2	58 90 53 20	Serrated gripper
3	71 11 31 10	Screw TCEI M12x70 12.9
4	71 11 21 24	Grub screw M6x16
5	71 15 02 06	Nut M6
6	58 90 54 10	Washer (5 mm)
7	58 90 54 20	Washer (10 mm)
8	58 90 55 10	Step washer

1

2

3

4

5

6

7

8

Gripper h25 smooth with adjustable screw

Id.No.
58 90 66 10

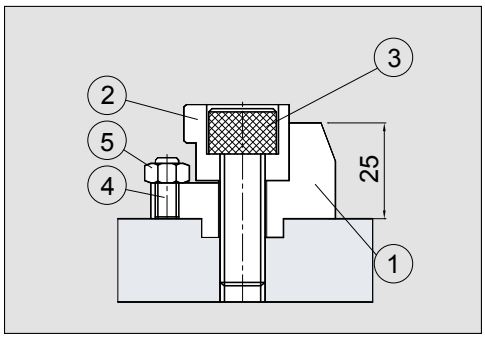

Pos.	Id.No.	Description
1	58 90 51 10	Body
2	58 90 52 10	Smooth gripper
3	71 11 31 05	Screw TCEI M12x3512.9
4	71 11 21 24	Grub screw M6x16
5	71 15 02 06	Nut M6

1

2

3

4

5

Gripper h25 serrated with adjustable screw

Id.No.
58 90 66 20

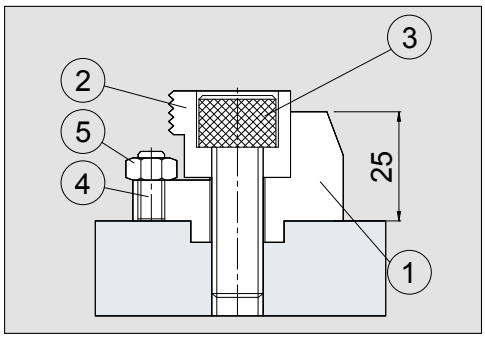

Pos.	Id.No.	Description
1	58 90 51 10	Body
2	58 90 52 20	Serrated gripper
3	71 11 31 05	Screw TCEI M12x35 12.9
4	71 11 21 24	Grub screw M6x16
5	71 15 02 06	Nut M6

1

2

3

4

5

Gripper h50 smooth with adjustable screw

Id.No.
58 90 67 10

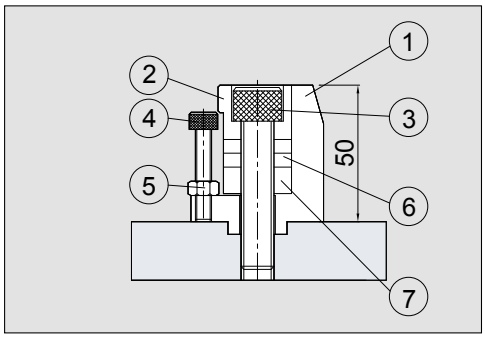

Pos.	Id.No.	Description
1	58 90 51 20	Body
2	58 90 52 10	Smooth gripper
3	71 11 31 09	Screw TCEI M12x60 12.9
4	71 11 30 47	Screw TCEI M6x16
5	71 15 02 06	Nut M6
6	58 90 54 10	Washer (5 mm)
7	58 90 54 20	Washer (10 mm)

1

2

3

4

5

6

7

Pair of positioning keys

Id.No.	mm	Id.No.	mm
58 90 13 92	18 x 12	58 90 13 95	18 x 18
58 90 13 93	18 x 14	58 90 13 96	18 x 20
58 90 13 94	18 x 16	58 90 13 97	18 x 22

Kit of 4 clamps

Id.No.	for type
58 90 27 09	VCP 100 - VP 100 VCP 130 - VP 130 VCP 160 - VP 160

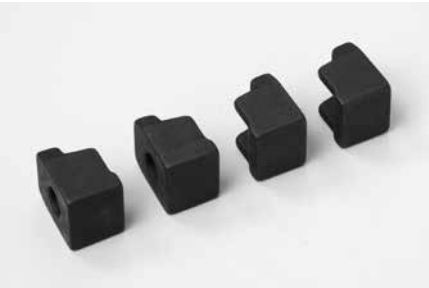

Wrench VCM/VCA

Id.No.	for type
58 90 19 10	VCM 100 - VCA 100 VCM 130 - VCA 130 VCM 160 - VCA 160

Torque wrench

Id.No.	for type
51 50 10 10	VCM 100 - VCA 100 VCM 130 - VCA 130 VCM 160 - VCA 160

Manufacturing tolerances for all type of vises

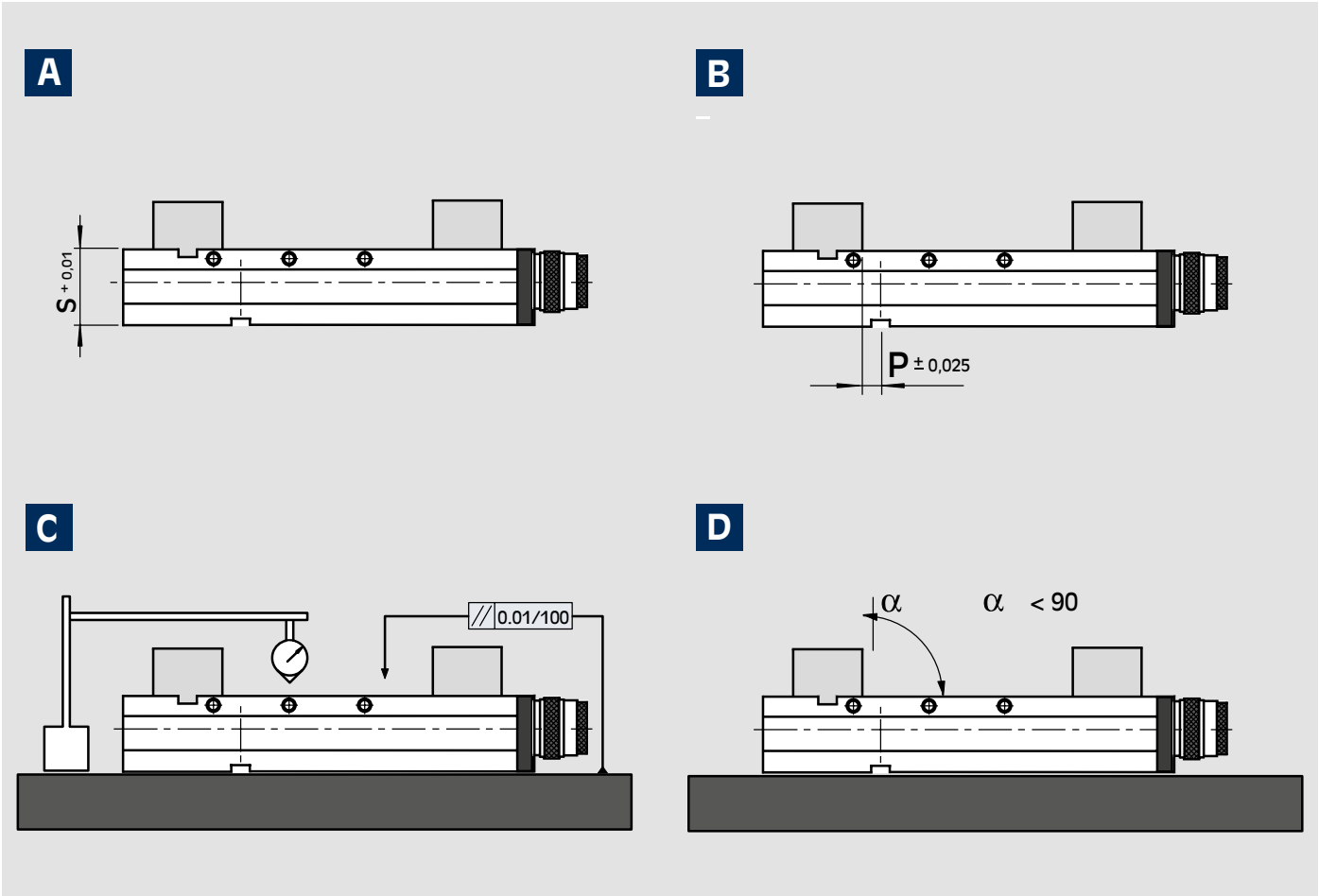

Repeatability accuracy for the clamping of model VCA ±0,01

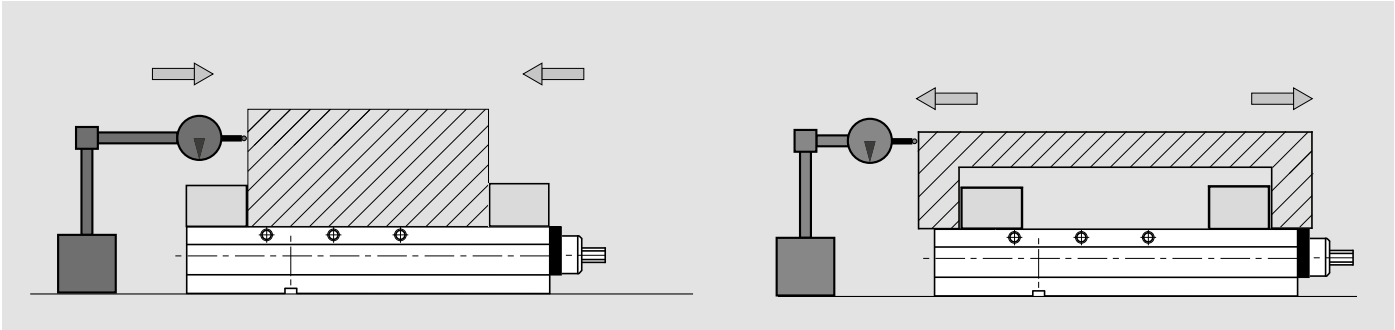

Clamping force diagrams VCM without clamping force multiplier

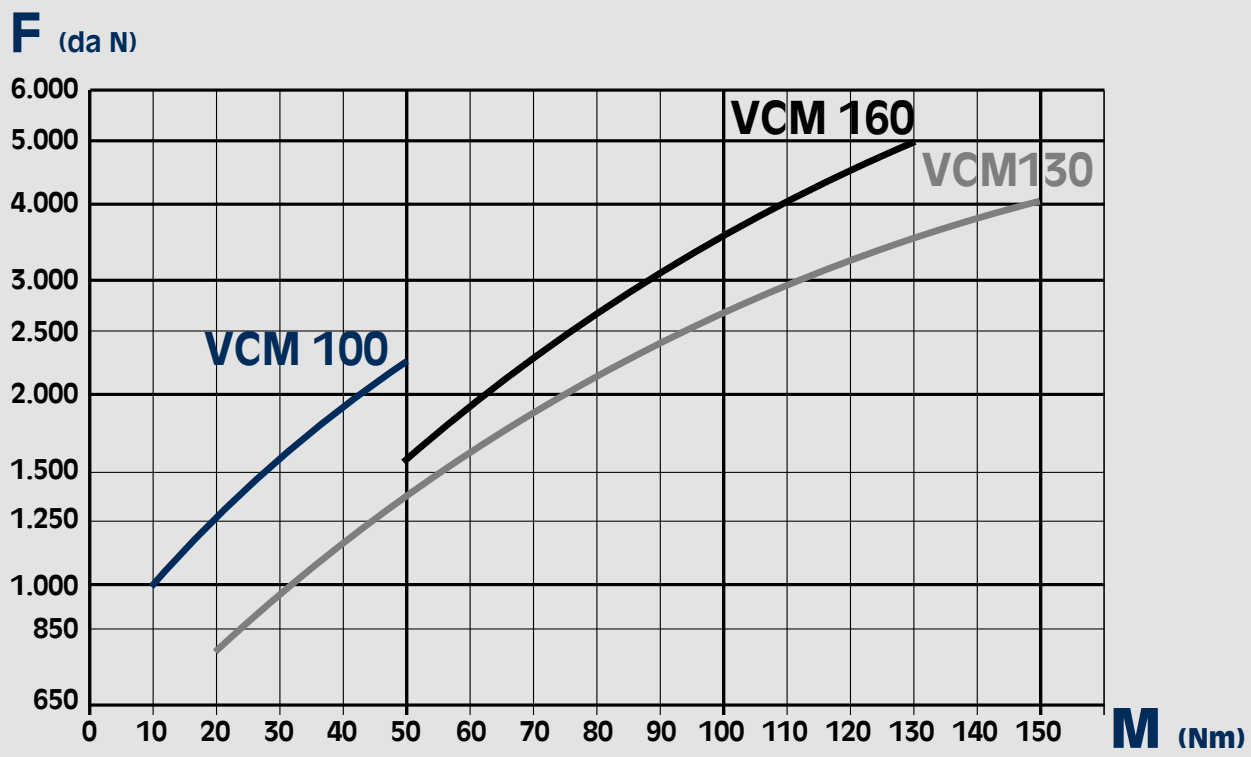

Vari CLAMP

Working examples

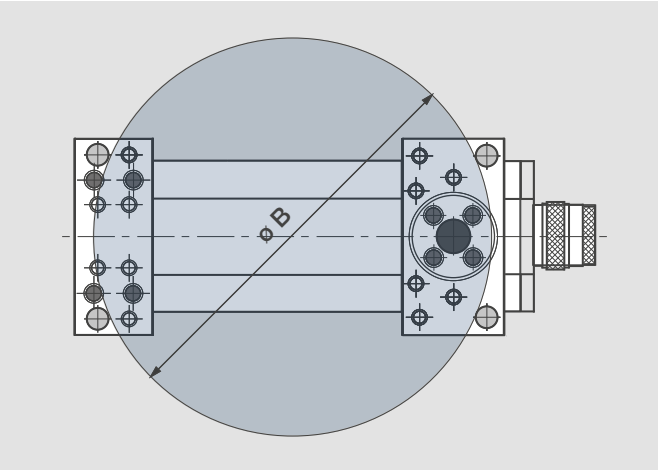

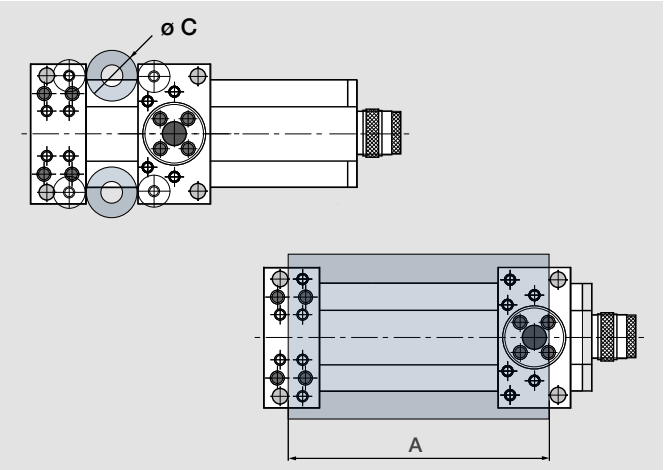

Vari CLAMP

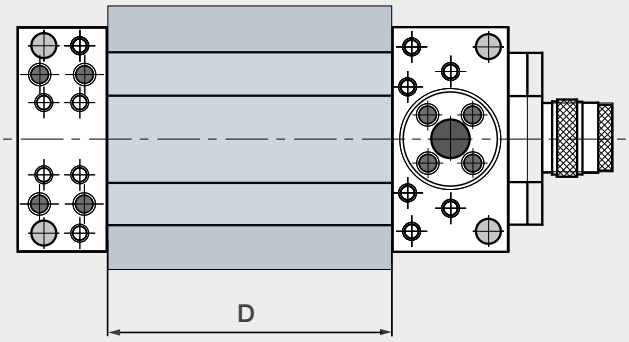

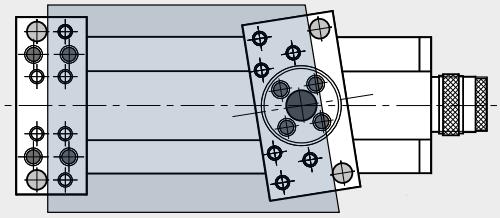

type	A	ø B	ø C	D
VCP 100	0-220	80-250	0-90	0-150
VCP 130	0-320	90-350	0-90	0-210
VCP 160	0-380	90-420		0-240

NOTES

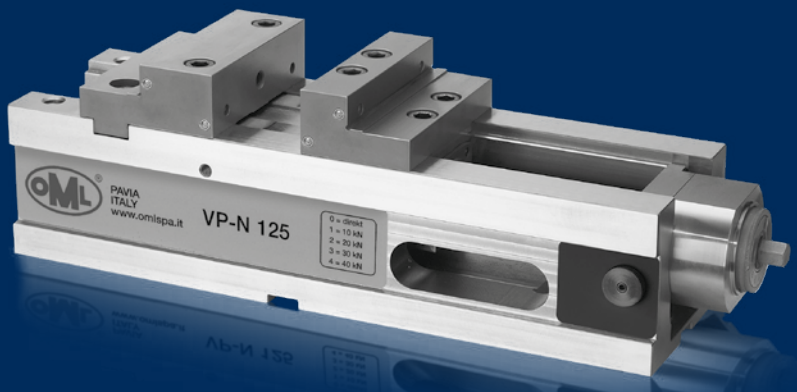

VP-N

NC Clamping Vice

Page 9.2.**4**

VP-N
NC Clamping Vice

Page 9.2.**9**

VP-N
SINTERGRIP

Page 9.2.**6**

VP-N
Accessories

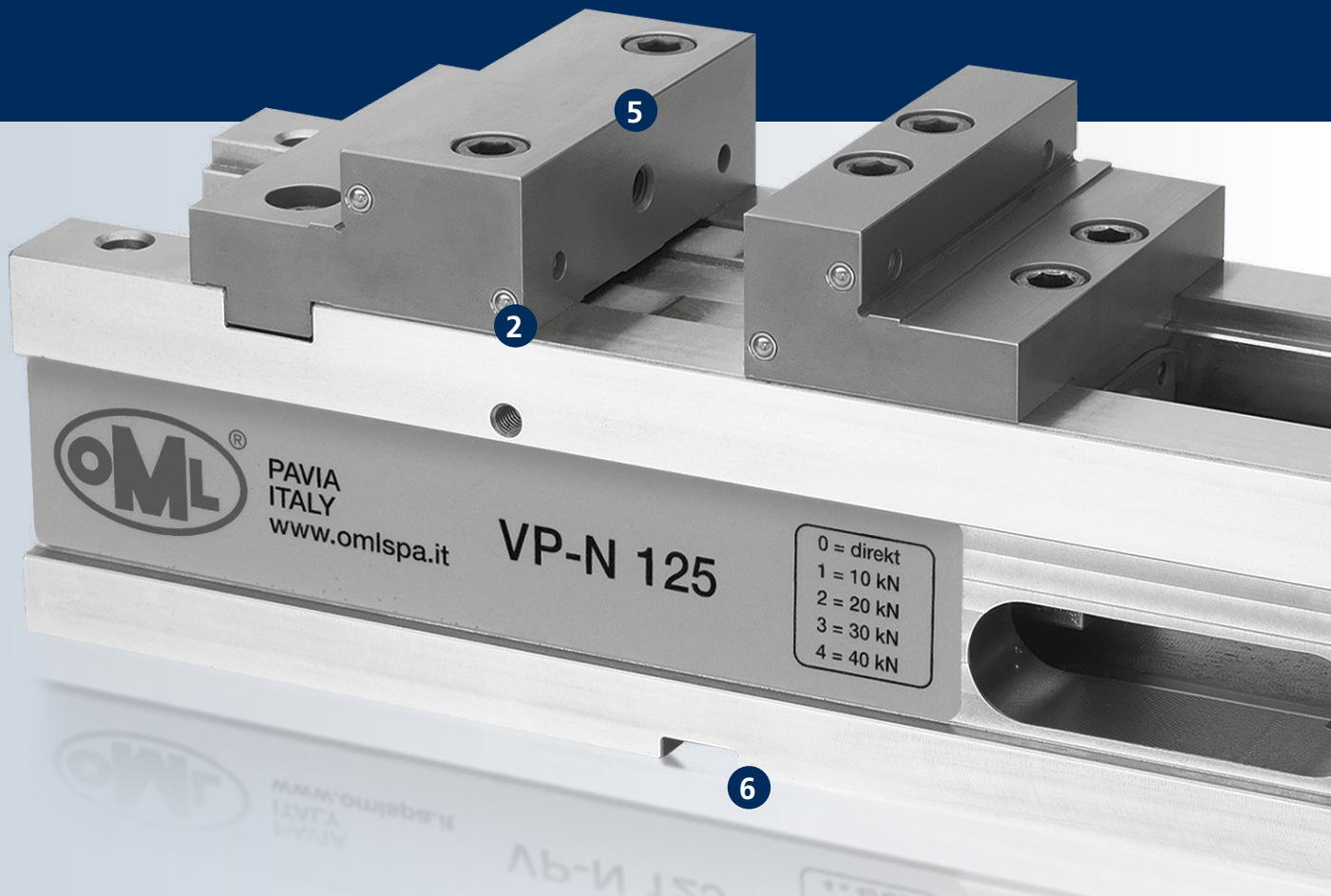

Quick change system of the spindle unit
Disassembling of the spindle unit without tools
Easy and quick cleaning of the vice

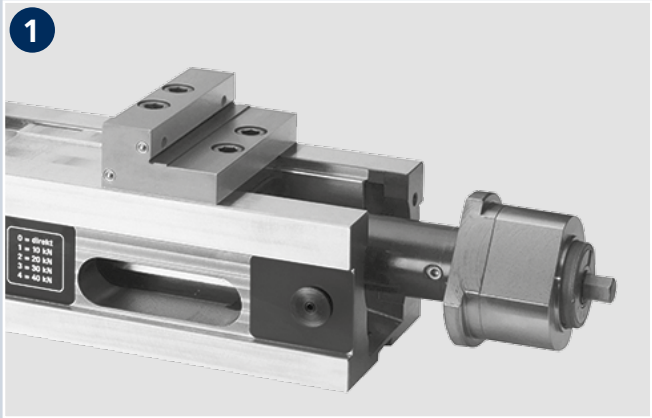

Parallels with quick change system
Mounting of parallels without tools
No penetration of chips below parallels

VP-N

NC Clamping Vice

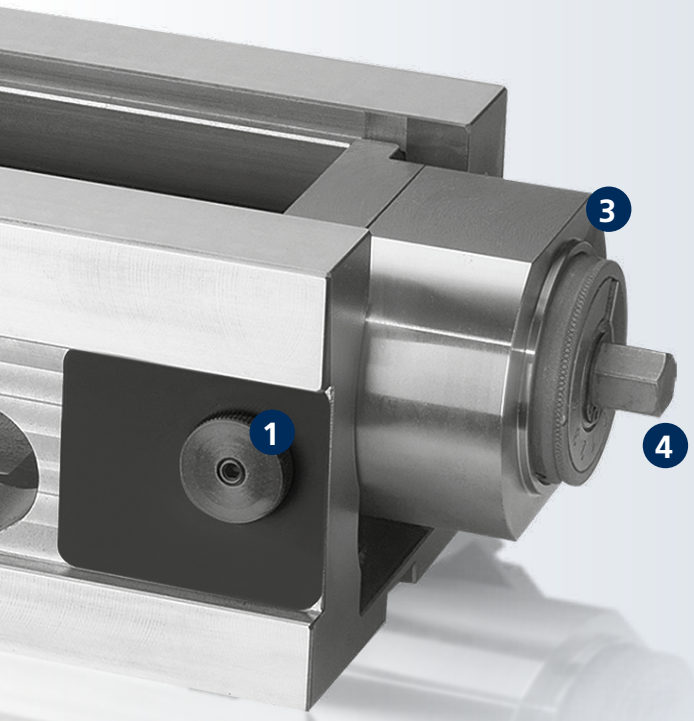

Interface for zero point clamping systems APS | WPS
as a standard for highest efficiency while set-up

SinterGrip
Jaws for SinterGrip clamping inserts as an accessory for
OP 10 operations available

Protected spindle with mechanical power intensifier
Exact pre-select of the clamping force (up to 11 steps)
Constant clamping force for maximum process reliability

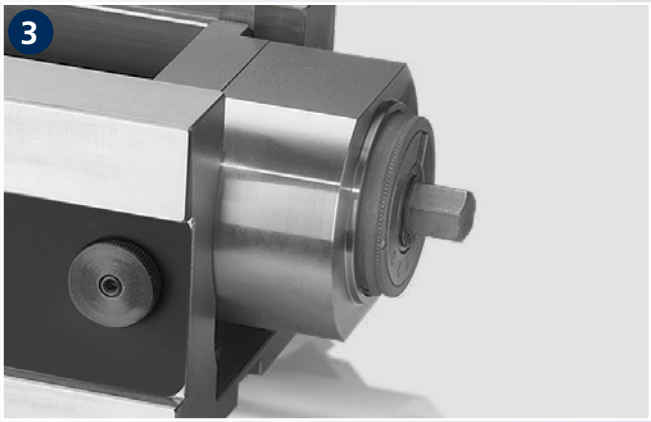

Angle drive (accessory)
Easy use on the machine table
Best accessibility for the setting of the clamping force

VP-N

NC Clamping Vice

- **With precision power transmitter**
- **Clamping against fixed jaw**

Technical features

- High clamping forces (up to 60 kN)
- 3 different sizes
- Precision guideway hardened and ground
- Interface for zero point clamping systems
- APS / WPS as a standard

Standard equipment

VP-N clamping vice together with hand crank
4 pieces clamps for fixing

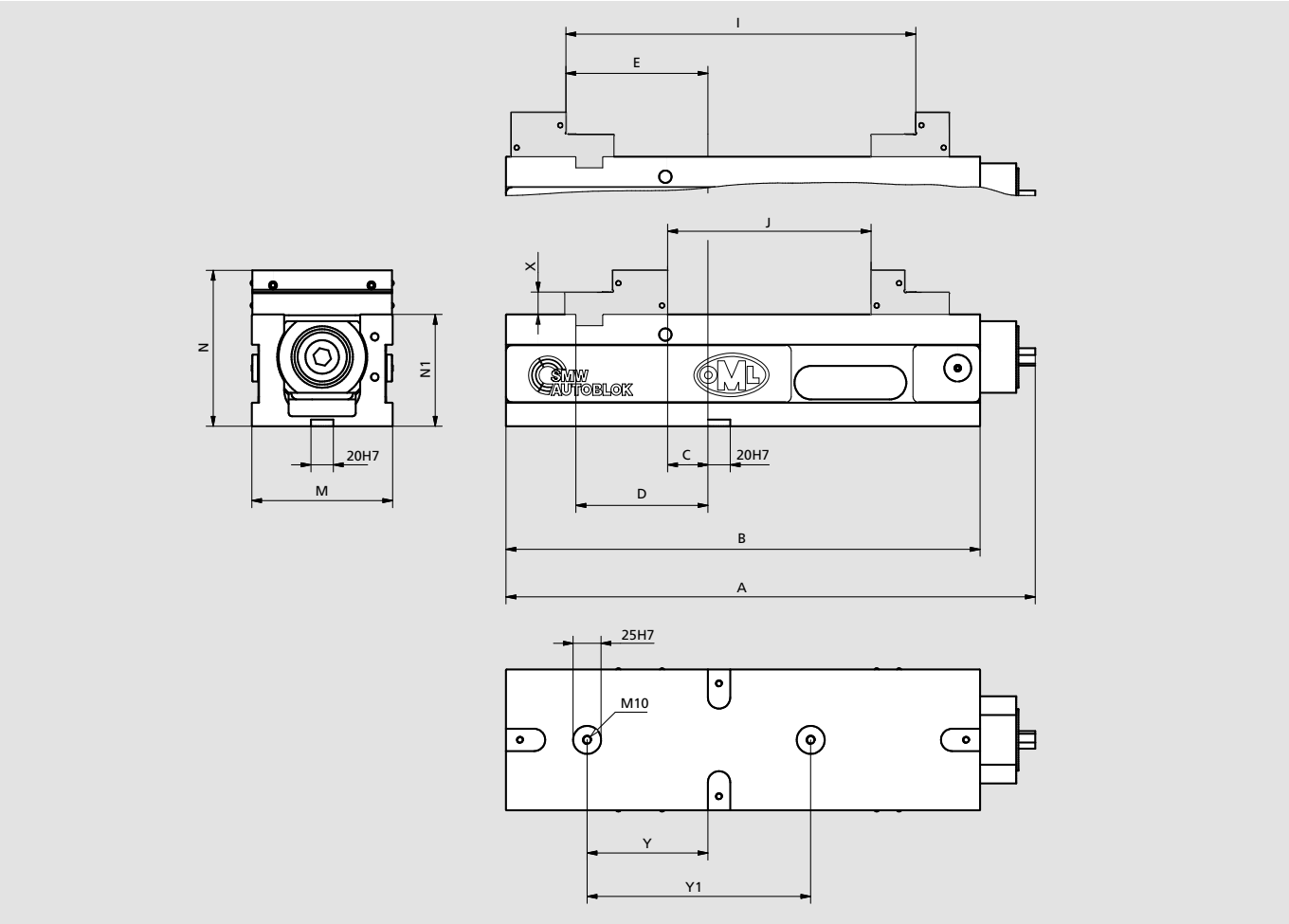

Id. no	Type	A	B	C	D	E	J	I	M	N	N1	X	Y	Y1	Clamping force	Weight
															kN	Kg
46 27 34	VP-N 90	340	305	15	73	75	0-126	91-217	90	114,0	80	16	58	200	28	15
46 27 35	VP-N 125	483	424	36	118	127	0-182	131-313	126	139,5	100	20	108	200	40	35
46 27 36	VP-N 160	616	560	70	164	178	17-263	187-433	164	164,8	115	25	114	300	60	60

- With precision power transmitter
- Clamping against fixed jaw

Clamping force diagrams

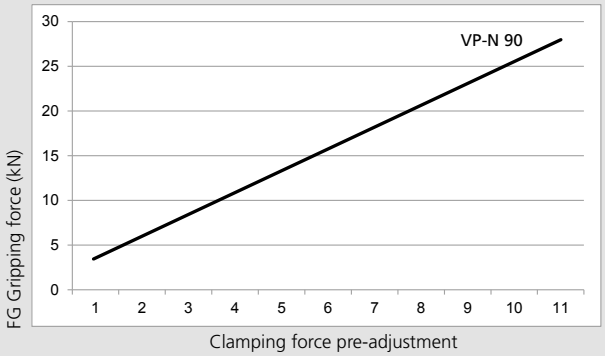

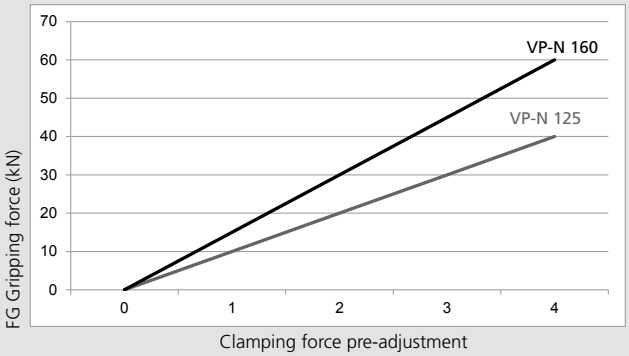

Manufacturing tolerances for all types of vices

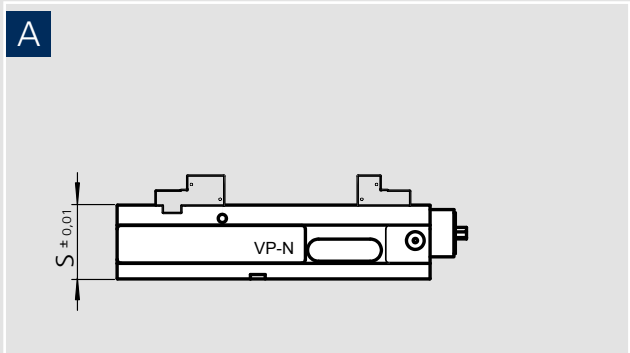

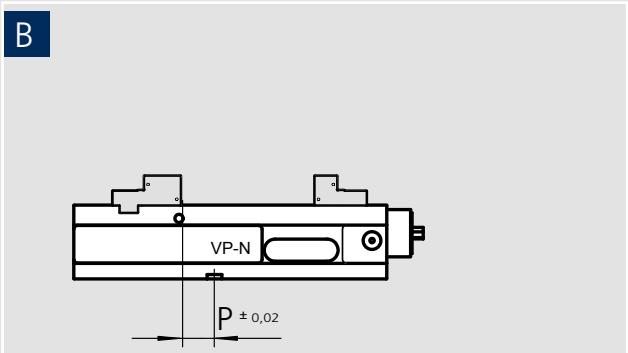

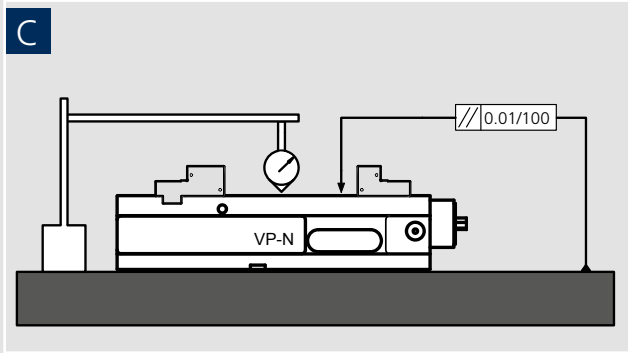

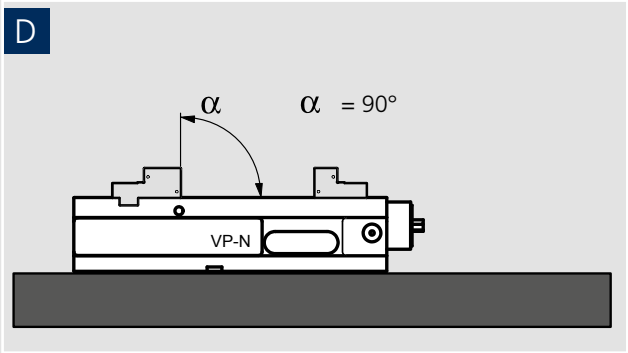

Flat clamping jaw hardened and grinded

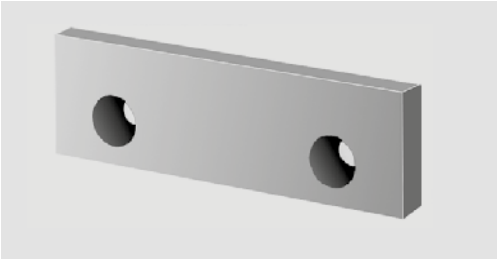

Id. No.	Type	Height	Depth
		mm	mm
46 27 38	VP-N 90	34.0	10
46 27 39	VP-N 125	39.2	12
46 27 40	VP-N 160	49.2	16

Consisting of: 1 piece clamping jaw

Flat clamping jaw soft (material 1.2842)

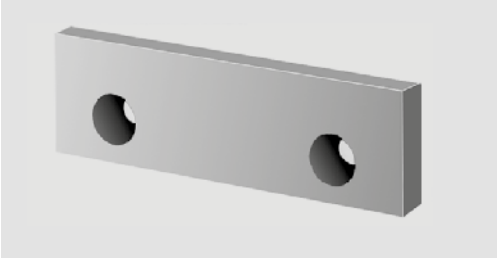

Id. No.	Type	Height	Depth
		mm	mm
46 27 41	VP-N 90	34.0	10
46 27 42	VP-N 125	39.2	12
46 27 43	VP-N 160	49.2	16

Consisting of: 1 piece clamping jaw

Clamping jaw with groove

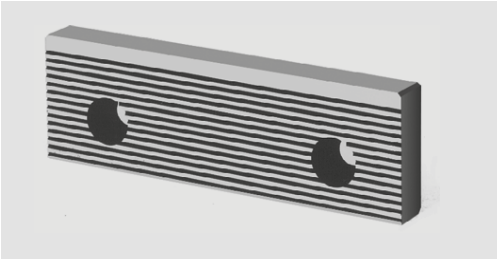

Id. No.	Type	Height	Depth
		mm	mm
46 27 44	VP-N 90	34.0	10
46 27 45	VP-N 125	39.2	12
46 27 46	VP-N 160	49.2	16

Consisting of: 1 piece clamping jaw

Parallel with quick change system

Id. No.	Type	Height	Depth
		mm	mm
46 27 47	VP-N 90	14	3
46 27 48	VP-N 90	30	3
46 27 49	VP-N 125	39	3
46 27 50	VP-N 125	35	3
46 27 51	VP-N 125	15	3
46 27 52	VP-N 160	14	3
46 27 53	VP-N 160	30	3
46 27 54	VP-N 160	44	3

Consisting of: 1 piece level bar

SinterGrip clamping jaw

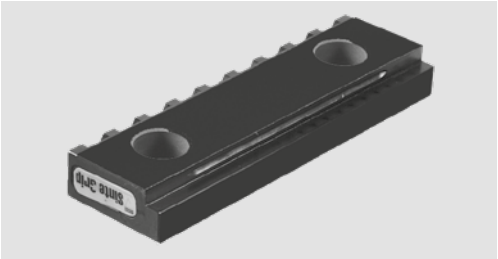

Id. No.	Type	Nr. Sintergrip per jaw	Height	Depth
			mm	mm
46 27 55	VP-N 125	9	39.5	12
46 27 56	VP-N 160	11	49.8	12

Consisting of: 1 piece SinterGrip clamping jaw (without clamping inserts)

Smooth clamping jaw with step

Id. No.	Type	Step	Height	Depth
		mm	mm	mm
46 27 57	VP-N 125	3 x 6	34.0	10
46 27 58	VP-N 125	5 x 10	39.2	12
46 27 59	VP-N 160	5 x 8	49.2	16

Consisting of: 1 piece clamping jaw

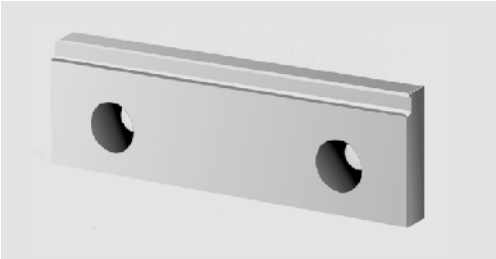

Step jaw for raw parts VP-N 125

Id. No.	Type	Model	Height	Step
		mm	mm	mm
46 27 60	VP-N 125	High step	39.5	1.4 x 4.5
46 27 61	VP-N 125	Low step	19.5	2.0 x 4.5

Consisting of: 1 piece step jaw

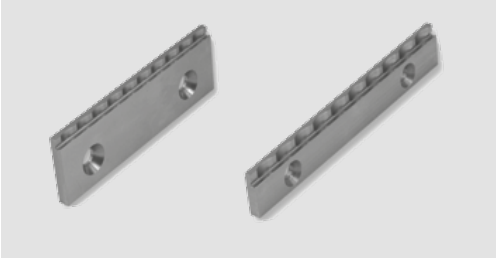

Serrated Clamping jaw with grippers

Id. No.	Type	Height	Depth	Thread	Id. No. Grippers
		mm	mm	mm	
46 27 62	VP-N 90	34	12	M10	46 27 62
46 27 63	VP-N 125	40	12	M10	46 27 63
46 27 64	VP-N 160	50	16	M12	46 27 64

Consisting of: 1 piece clamping jaw

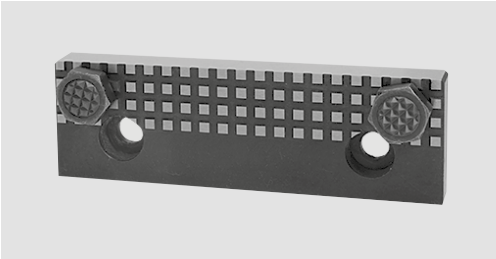

Prismatic jaw horizontal and vertical prisma 90° hardened and grinded

Id. No.	Type	Height	Depth	Clamping min/max mm	
		mm	mm	1 ganascia	2 ganascie
46 27 65	VP-N 90	36.0	17	ø 12-14	ø 18-42
46 27 66	VP-N 125	39.2	28	ø 15-42	ø 24-42
46 27 67	VP-N 160	49.2	32	ø 18-50	ø 28-50

Consisting of: 1 piece clamping jaw

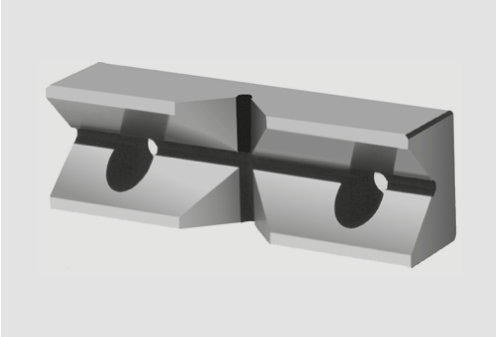

Pull-down jaw with interchangable insert

Id. No.	Type	Height	Depth
		mm	mm
46 27 68	VP-N 90	34.0	24
46 27 69	VP-N 125	39.2	25
46 27 70	VP-N 160	49.2	28

Consisting of: 1 piece clamping jaw

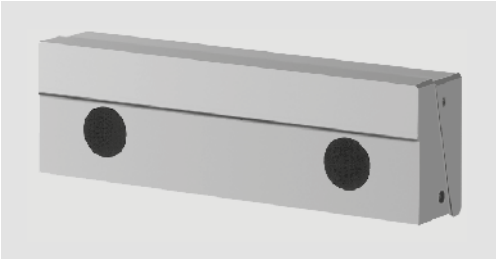

Pull-down jaw for raw parts with spring blade

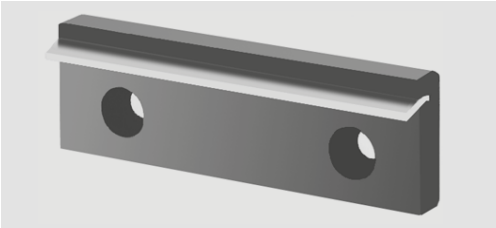

Code	Type	Height	Depth
		mm	mm
46 27 71	VP-N 90	34	18
46 27 72	VP-N 125	40	21
46 27 73	VP-N 160	50	24

Consisting of: 1 piece clamping jaw

Fixed jaw with grippers, Floating jaw with gripper

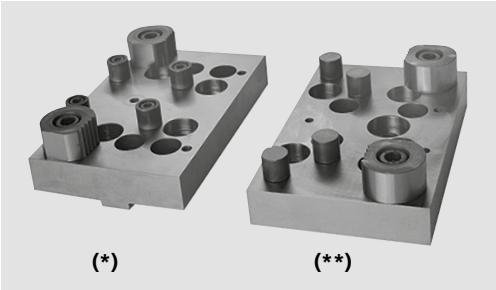

Code	Type	Height	Width	Lenght
		mm	mm	mm
46 27 74	VP-N 90 (*)	25	145	90
46 27 75	VP-N 125 (*)	25	170	105
46 27 76	VP-N 160 (*)	25	200	115
46 27 86	VP-N 90 (**)	25	145	90
46 27 87	VP-N 125 (**)	25	170	105
46 27 88	VP-N 160 (**)	25	200	115

Consisting of: 1 piece clamping jaw (*****) fixed jaw - (******) movable jaw

Floating jaw

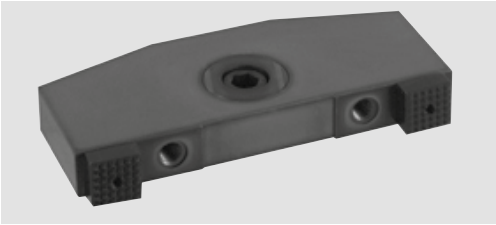

Code	Type	Width	Lenght	Height
		mm	mm	mm
46 27 77	VP-N 90	50	141	20
46 27 78	VP-N 125	65	156	20
46 27 79	VP-N 160	76	196	23

Consisting of: 1 piece clamping jaw

Angle drive for VP-N NC Clamping vices

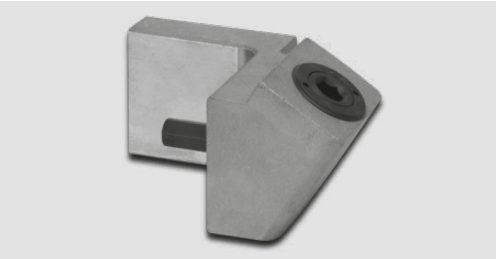

Code	Type	Lenght	SW
		mm	
46 27 80	VP-N 90	12	SW 12
46 27 81	VP-N 125	33	SW 14
46 27 82	VP-N 160	49	SW 14

Consisting of: 1 piece angle jaw

Hand crank standard versione for VP-N NC Clamping vices

Code	Type	Lenght	SW
		mm	
46 27 83	VP-N 90	160	SW 12
46 27 84	VP-N 125	160	SW 14
46 27 85	VP-N 160	160	SW 14

Consisting of: 1 piece hand crank

Positioning Key with screw

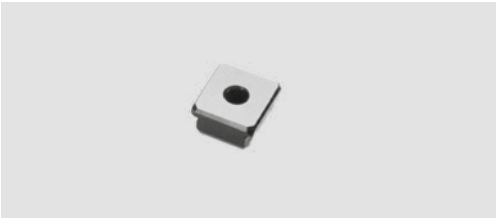

Code	Type
	mm
46 26 38	20 x 12
46 26 39	20 x 14
46 26 40	20 x 16
46 26 41	20 x 18
46 26 42	20 x 20
46 26 43	20 x 22

Our new product **SinterGrip** is born to satisfy the current need to clamp a workpiece for very few millimeters (with SinterGrip 3,5 mm clamping surface), and this for the following reasons:

1) In order to machine the workpiece completely in a single operation (especially for 5 axis machines);
2) In order to save money for the raw materials, especially when they have a big impact on the price (aluminum, titanium, etc.)

Indirectly to these reasons, and in order to improve the performance of the machine tool and the tools

higher cutting speed + higher feed rate =
bigger volume of metal removed =
less time to machine the workpiece

the market requires safe clamping, which could at the same time possibly avoid the deformations of the piece itself.

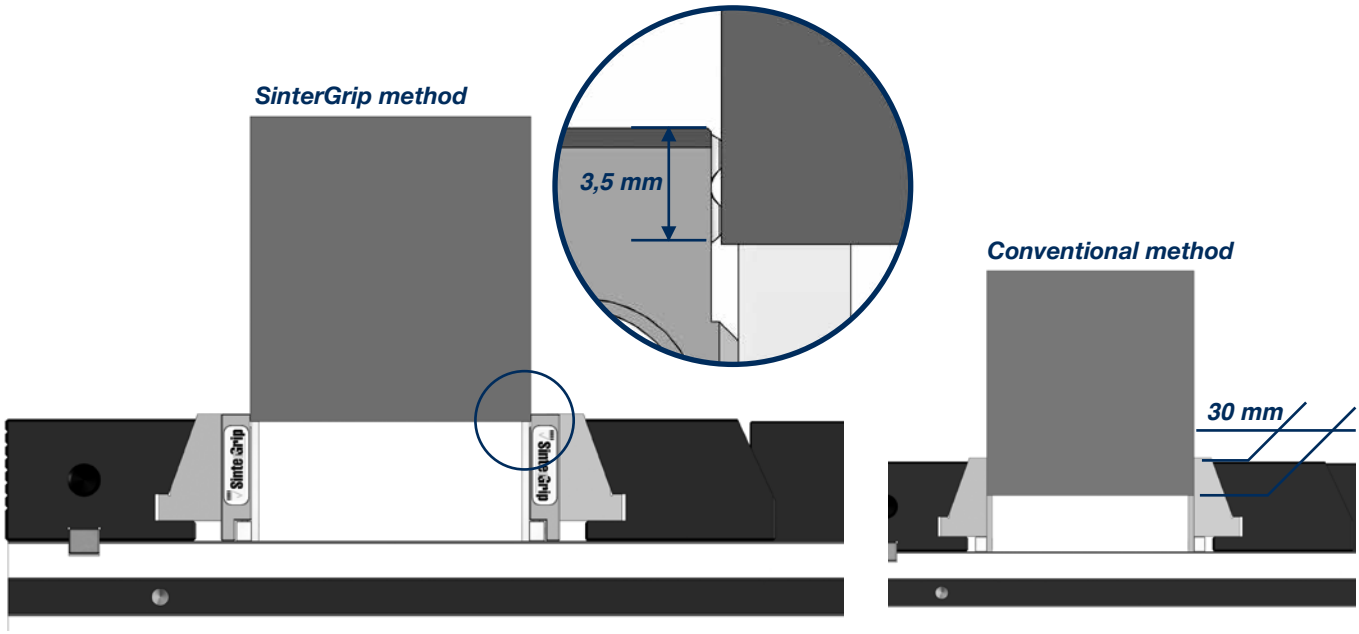

Only 3,5 mm clamping surface, no need of pre-machining the workpiece, clamping stability, higher cutting rate: SinterGrip brings only advantages compared to the traditional systems.

On the contrary, traditional systems need, for the clamping of the workpiece, a bigger clamping surface, with the result of waste of raw materials and greater possibility of deformation of the workpiece.

Working example: jaws mounted on a TC clamp

Working example: inserts SinterGrip mounted.

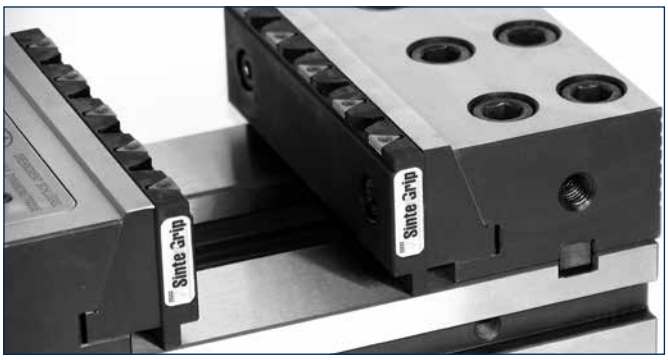

SinterGrip

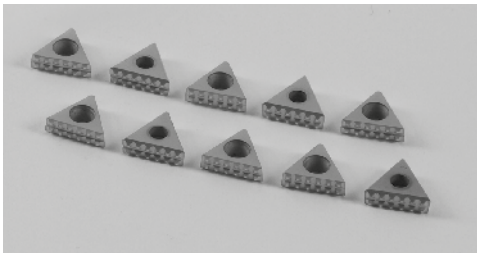
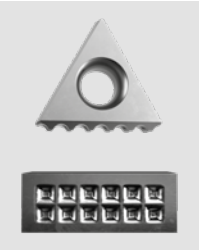

Id. No.	Description
58450119	Set of 10 SinterGrip inserts **STD** for steel

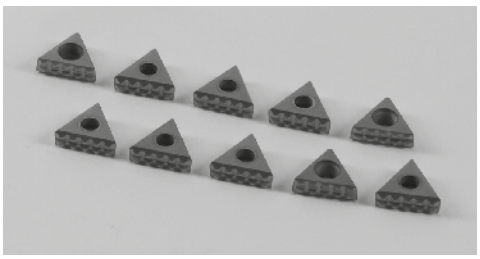
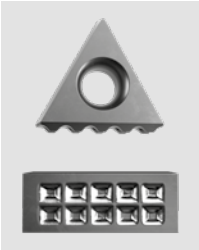

Id. No.	Description
58450129	Set of 10 SinterGrip inserts **HRC** for hardened steel / titanium until 50-54 HRC

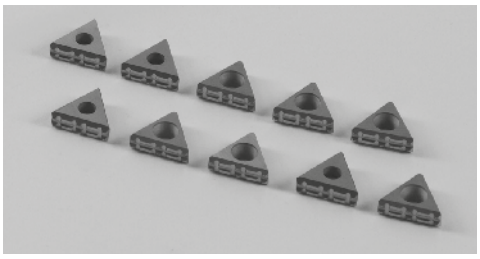
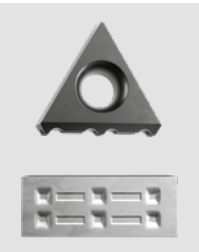

Id. No.	Description
58450139	Set of 10 SinterGrip inserts for **ALU**

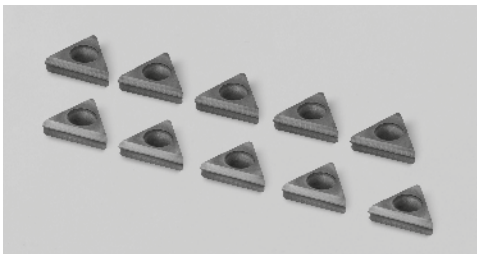

Id. No.	Description
58450149	Set of 10 SinterGrip inserts **PLM** for polymeric materials

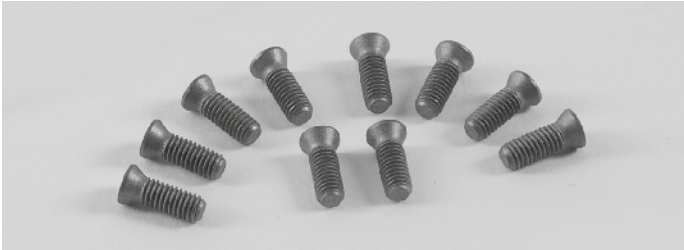

Id. No.	Description
58450219	Set 10VTX30 for inserts SINTERGRIP

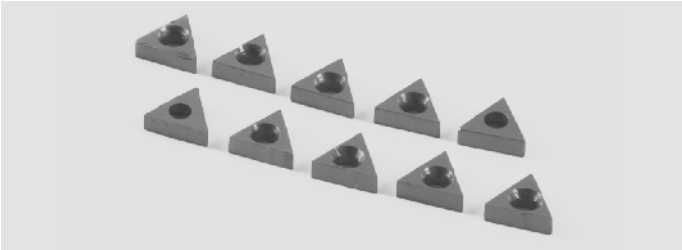

Id. No.	Description
58450519	Set 10 protection inserts in aluminum

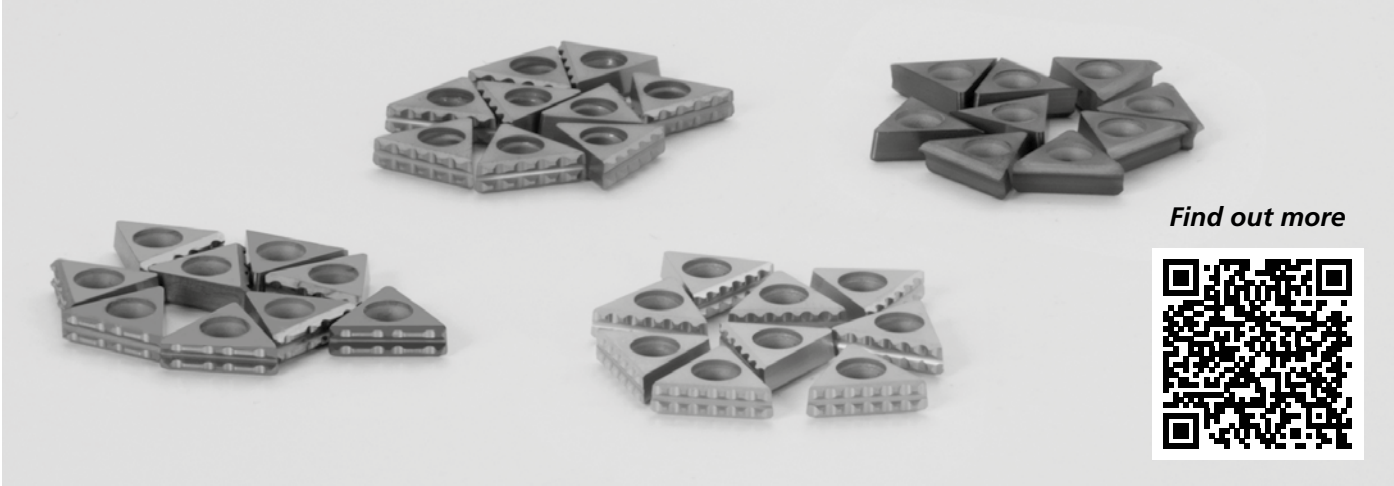

SinterGrip

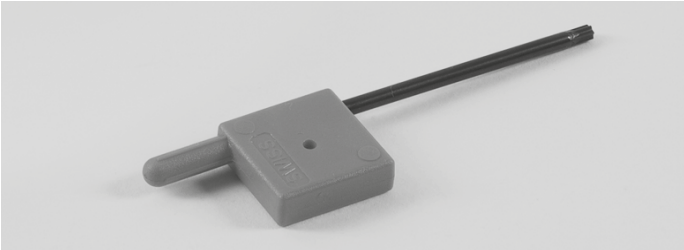

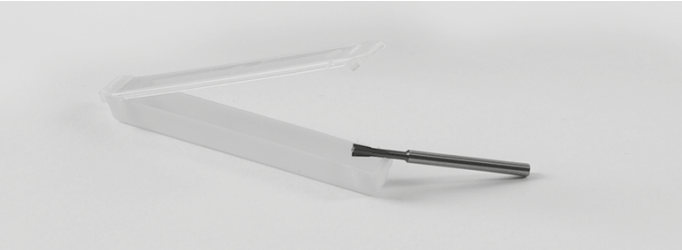

Id. No.	Description
58450320	Wrench TORX T9

Id. No.	Description
58450410	Special cutting tool D3

NOTES

TWIN VISES

PTP

Protected pneumatic vise 100, 125, 160, 200

- Protected against swarf and chips
- Pneumatic version
- Normal stroke: PTP-N / Long stroke: PTP-L
- Fixed jaw: PTP-F
- Pneumatic jaw stroke control valve
- Air purge
- Air sensing

Page 10.**4**

PTH

Protected hydraulic vise 100, 125, 160, 200, 250

- Protected against swarf and chips
- Hydraulic version
- Normal stroke: PTH-N / Long stroke: PTH-L
- Fixed jaw: PTH-F
- Pneumatic jaw stroke control valve
- Air purge
- Air sensing

Page 10.**6**

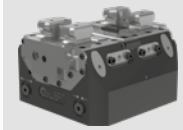

PT-RR

Protected vise 160, 200, 250

- QUICK JAWS CHANGE
- Pneumatic version
- Hydraulic version
- Pneumatic jaw stroke control valve
- Long stroke: PTP-L-RR / PTH-L-RR
- Air sensing
- OD and ID clamping

Page 10.**8**

STV-2

Spring and air operated vise 125, 180, 225

- Protected
- Springs to clamp, pneumatic to open
- Turbo function to increase the clamping forces
- Pneumatic jaw stroke control valve
- Normal stroke: STV-2N / Long stroke: STV-2L
- Air purge
- Air sensing

Page 10.**14**

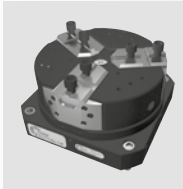

STV-3

Spring and air operated vise 180, 225

- Protected
- 3 jaws
- Springs to clamp, pneumatic to open
- Turbo function to increase the clamping forces
- Normal stroke: STV-3N / Long Stroke STV-3L
- Pneumatic jaw stroke control valve
- Air purge

Page 10.**16**

TVP

Pneumatic vise 100, 160, 200, 250, 315

- Normal stroke: TVP-N
- Long stroke: TVP-L
- Fixed jaw: TVP-F
- Air purge

Page 10.**20**

TVH

Hydraulic vise 100, 160, 200

- Normal stroke: TVH-N
- Long stroke: TVH-L
- Fixed jaw: TVH-F
- Air purge

Page 10.**22**

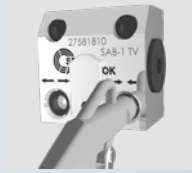

SAB-1

Safety valve (optional)

- To maintain air pressure during pallet transportation / storage and machining

Page 10.**26**

Jaws

Accessories

- Soft top jaws
- Soft top jaws for PT-RR
- Wide hard top jaws
- Narrow hard top jaws
- Jaws for SinterGrip

Page 10.**28**

TWIN VISES

RANGE OF PRODUCTS

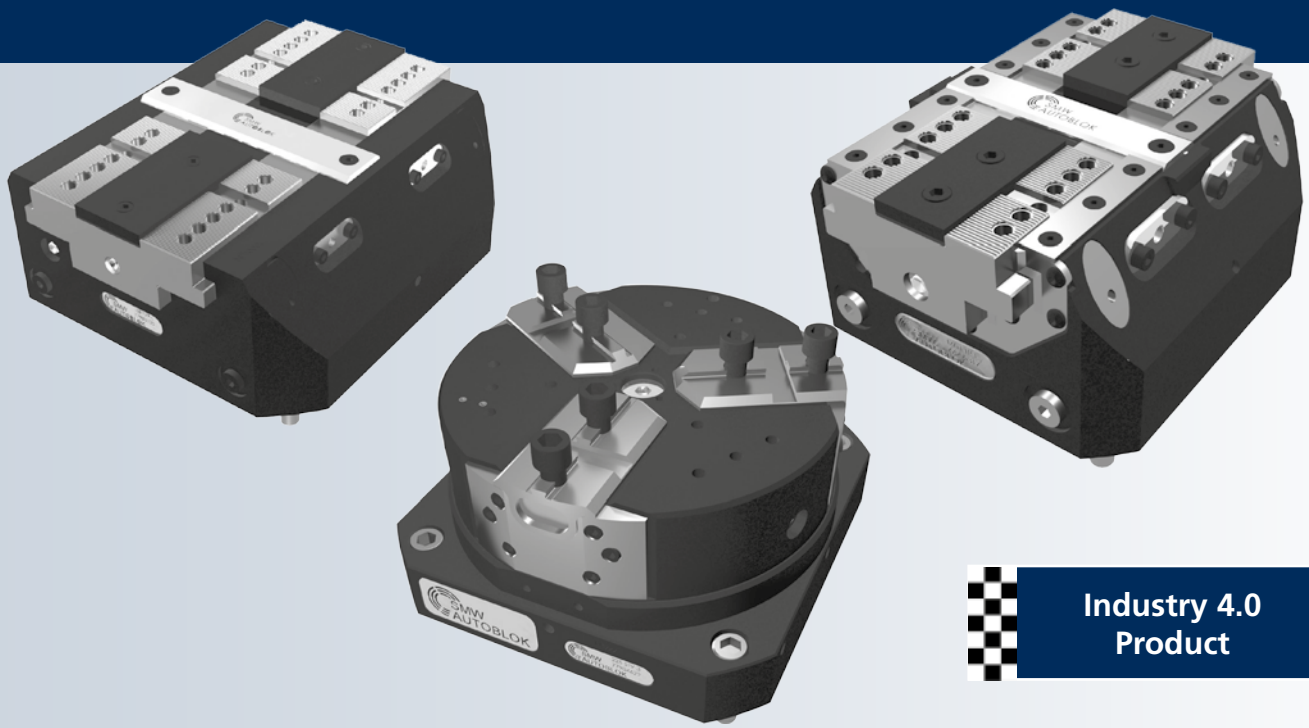

Industry 4.0 Product

1 PT - PROTECTED TWIN VISES

SIZES AVAILABLE 100-125-160-200-250

- Pneumatic and Hydraulic Version
- Pneumatic Valve (optional)
- Air Sensing
- Master jaws guide protected against swarf and chips 1.1
- Normal Stroke
- Long Stroke
- Fixed Jaw

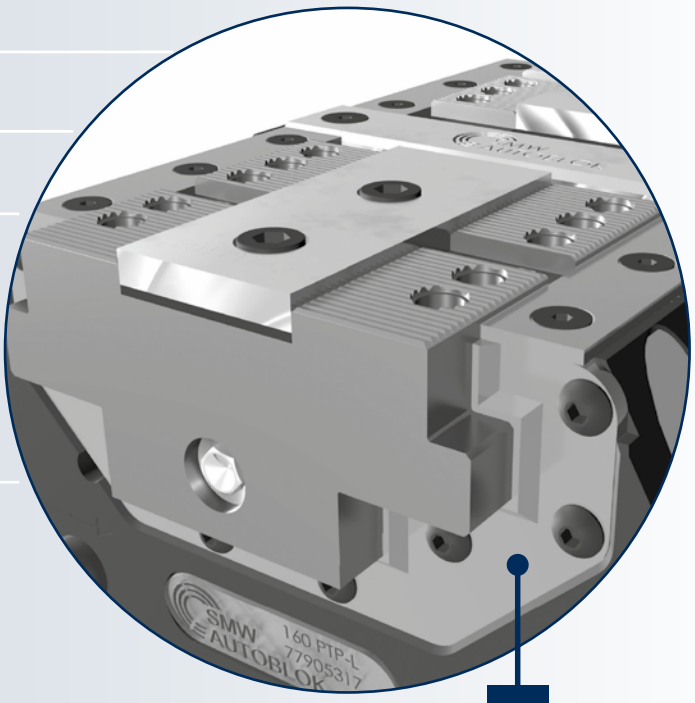

1.1

2 STV - SPRING AND AIR OPERATED TWIN VISES

SIZES AVAILABLE 180-225

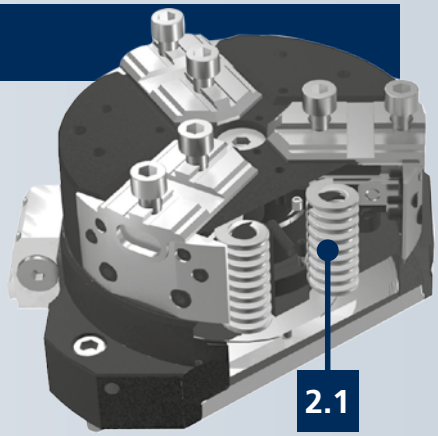

- STV 2 Jaws (also 125) and STV 3 Jaws
- Air Sensing
- Master jaws guide protected against swarf and chips
- Spring Clamped and Air Operated 2.1 2.2
- Safety Valve SAB-1 (optional)
- Pneumatic Valve (optional)
- Normal stroke
- Long stroke

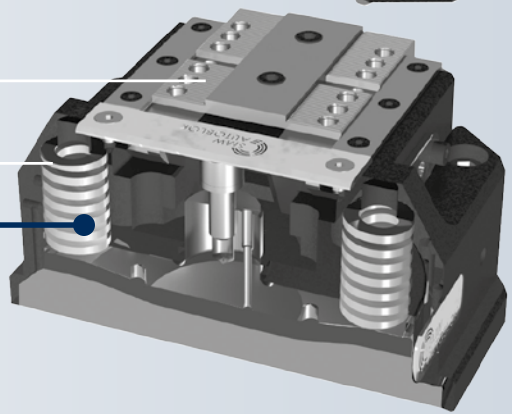

3 TV - STANDARD TWIN VISES

SIZES AVAILABLE 100-160-200-250-315

- Pneumatic and Hydraulic Version
- Air Sensing 3.1
- Stroke control Proximity (optional)
- Normal Stroke
- Long Stroke
- Fixed Jaw

4 RR - QUICK JAWS CHANGE

PROTECTED TWIN VISE with QUICK CHANGE

- Pneumatic and Hydraulic Version
- Long stroke
- OD and ID Clamping

PTP-N/PTP-L/PTP-F

PROTECTED PNEUMATIC TWIN VISE

- Pneumatic version
- Pneumatic open / close control (stroke control) master jaws valve
- PTP-N: Normal stroke
- PTP-L: Long stroke
- PTP-F: One fixed jaw

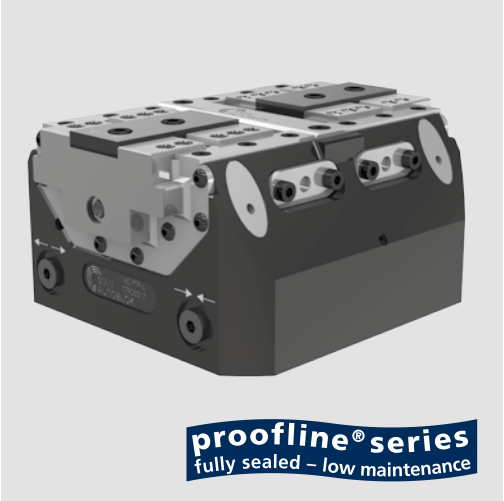

Application/customer benefits

- Compact design
- Master jaws guide protected against swarf and chips (proofline)
- Highest repeatability
- Highest rigidity
- Linear pressure adjustment

Technical features

- Housing and functional parts hardened for high precision and long life
- Ready for air purge
- Ready for central grease lubrication
- Master jaws with both Tongue & Groove and fine serration 1.5 mm x 60°
- OD and ID clamping
- Pneumatic open / close control (stroke control) master jaws valve (optional)
- Air sensing
- Lubrication with SMW-AUTOBLOK K67 grease
- Stroke control via proximity switches (optional) on all types and sizes except 100 PTP-F
- 100 PTP-F only one stroke control via proximity switch for full closed vise

Standard equipment

Self-centering vise without top jaws
All bolts and centering bushings included

Gripping force diagrams

PTP-N ☐100 ☐125 ☐160 ■200

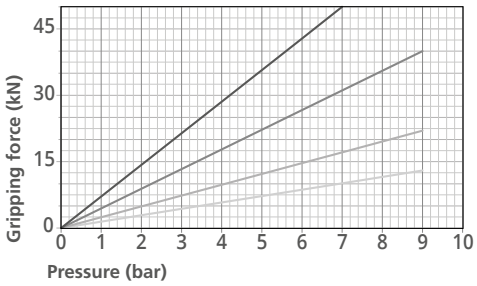

PTP-L ☐100 ☐125 ☐160 ■200

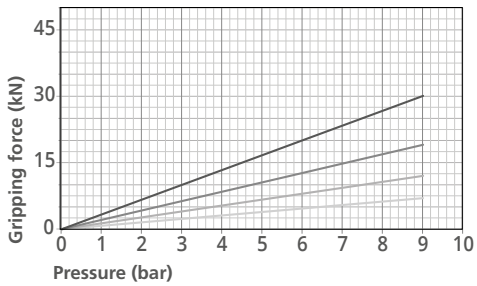

PTP-F ☐100 ☐125 ☐160 ■200

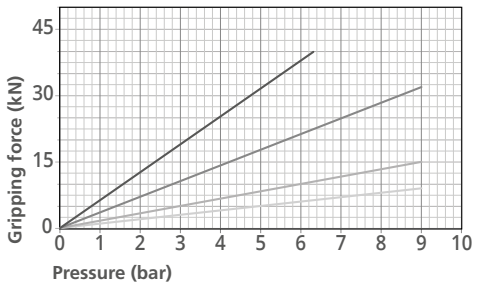

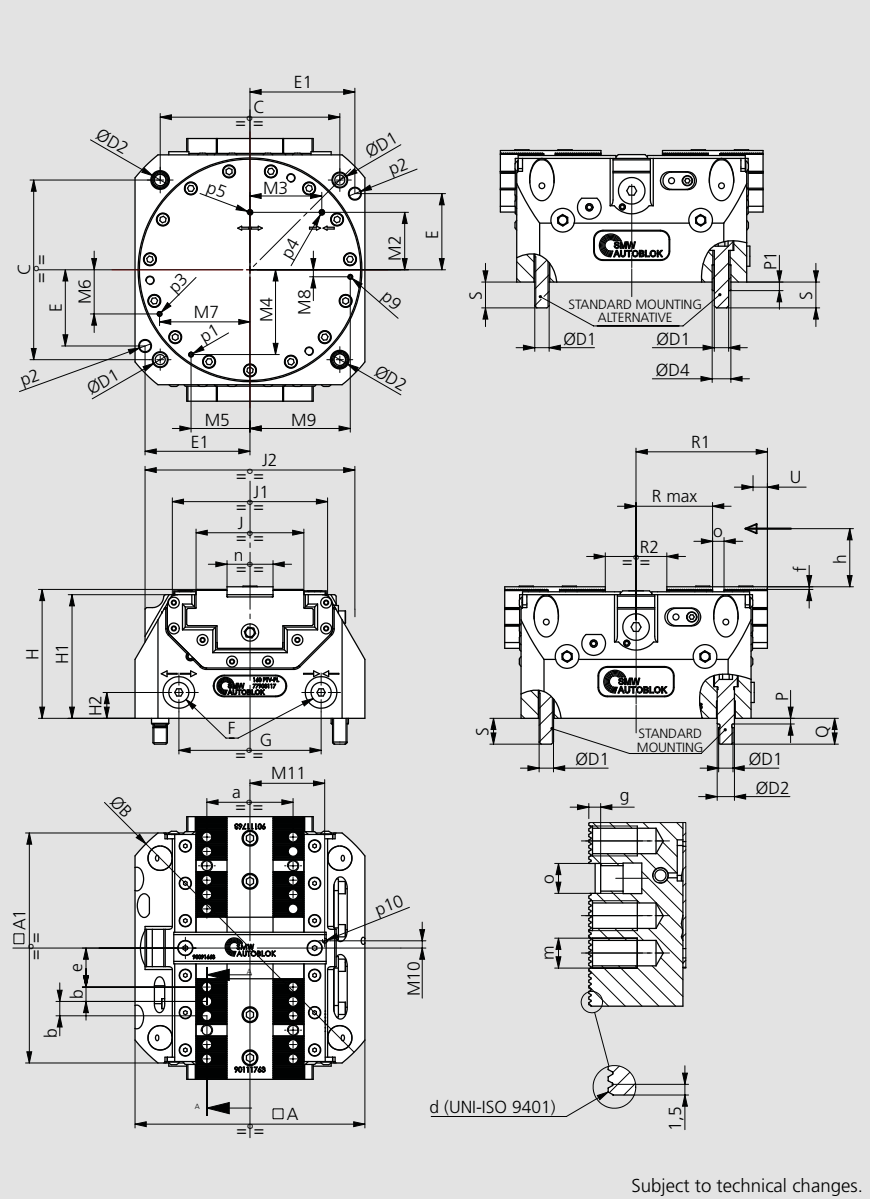

Subject to technical changes.

PTP-N/PTP-L/PTP-F

PROTECTED PNEUMATIC TWIN VISE

- Pneumatic version
- Pneumatic open / close control (stroke control) master jaws valve
- PTP-N: Normal stroke
- PTP-L: Long stroke
- PTP-F: One fixed jaw

Type	Id. No.	Stroke type	Stroke / jaw [mm]	Max. Clamping force [kN]	Piston area [cm²]	Max. Operating pressure [bar]	Repeatability [mm]	Weight [kg]
100 PTP-N	77905211	NORMAL	2.6	13	45	9	0.01	5.5
100 PTP-L	77905311	LONG	6	7				
100 PTP-F	77905411	FIXED JAW	6	9				
125 PTP-N	77905212	NORMAL	2.6	22	78	9	0.01	7
125 PTP-L	77905312	LONG	6	12				
125 PTP-F	77905412	FIXED JAW	6	15				
160 PTP-N	77905217	NORMAL	3	40	128	9	0.01	13
160 PTP-L	77905317	LONG	8.4	19				
160 PTP-F	77905417	FIXED JAW	8.4	32				
200 PTP-N	77905221	NORMAL	4.2	50	194	7	0.02	23
200 PTP-L	77905321	LONG	10.2	30		9		
200 PTP-F	77905421	FIXED JAW	10.2	38		6		

PTP			100	125	160	200
	A	mm	100	125	160	200
	A1	mm	110	125	160	200
	B(Ø)	mm	136	162	205	255
	C	mm	80	100	125	160
	D1(Ø)	mm	M8	M8	M10	M12
	D2 (Øf7)	mm	10	10	12	14
	D4 (Øjs7)	mm	11	11	13	16
	E	mm	32	/	53	73
	E1	mm	45	/	73	92
	F	mm	M5	M5	G1/8"	G1/8"
	G	mm	59	59	99	127
	H	mm	75.5	80.5	89.7	97
	H1	mm	72	77	86	93
	H2	mm	15	17	18	18
	J	mm	47	47	75	94
	J1	mm	82	100	108	144
	J2	mm	100	121	146	166
	M2	mm	32	32	40	50
	M3	mm	29.5	29.5	50	65
	M4	mm	34,2	40.5	59	72.8
	M5	mm	27.7	38.5	41	52.9
	M6	mm	14,2	10.6	30.7	39.5
	M7	mm	41.1	54.5	62.9	80.9
	M8	mm	8.3	4.8	4.9	9.4
	M9	mm	42.7	55.3	69.8	89.5
	M10	mm	5	5	5	8
	M11	mm	34	34	52	60
	P	mm	4	4	4	5
	P1	mm	4	4	6	6
	Q	mm	15	15	18	20
Min/max (long stroke)	**R max**	mm	25.6/31.6	25.6/31.6	44.8/53.2	54.5/64.7
Min/max (normal stroke)	**R max**	mm	25.4/28	25.4/28	45/48	54.5/58.7
Min/max (fixed jaw)	**R max**	mm	25.6/31.6	25.6/31.6	44.8/53.2	54.5/64.7
Min/max (long stroke)	**R1**	mm	57.5/63.5	64.5/70,5	82.5/90.9	102.5/112.7
Min/max (normal stroke)	**R1**	mm	57.4/60	64.4/67	82.5/85.5	102.8/107
Min/max (fixed jaw)	**R1**	mm	57.5/63.5	64.5/70.5	82.5/90.9	102.5/112.7
Min/max (long stroke)	**R2**	mm	20/32	20/32	26/42.8	30/50.4
Min/max (normal stroke)	**R2**	mm	19.8/25	19.8/25	26/32	30.6/39
Min/max (fixed jaw)	**R2**	mm	20/26	20/26	26/34.4	30/40.2
	S	mm	15	15	18	20
Long stroke	**U**	mm	6	6	8.4	10.2
Normal stroke	**U**	mm	2.6	2.6	3	4.2
Fixed jaw	**U**	mm	6	6	8.4	10.2
	a	mm	35	35	60	80
	b	mm	7	7	10	10
Serration	**d**	mm	1.5x60°	1.5x60°	1.5x60°	1.5x60°
Min/max (long stroke) (fixed jaw)	**e**	mm	14.6/20.6	14.6/20.6	18.8/27.2	28.5/38.7
Min/max (normal stroke)	**e**	mm	14.4/17	14.4/17	19/22	28.5/32.7
	f	mm	1.8	1.8	1.8	2
	g	mm	2.7	2.7	3.2	4
	h	mm	16	16	25	35
	m	mm	M6x10	M6x10	M8x12	M8x12
	n (g6)	mm	20	20	32	40
	o (H7)	mm	6	6	8	8
Lubrication fitting	**p1**	mm	M4	M4	M4	M4
	p2 (øH7)	mm	/	/	8x14	8x14
Pneumatic open/close- stroke control m.Jaws or air purge	**p3**	mm	M4	M4	M4	M4
Vise close	**p4**	mm	M4	M4	M4	M4
Vise open	**p5**	mm	M4	M4	M4	M4
Air sensing connection	**p9**	mm	M4	M4	M4	M4
Air sensing outlet (under front plate)	**p10**	mm	M4	M4	M4	M4

PTH-N/PTH-L/PTH-F

PROTECTED HYDRAULIC TWIN VISE

- Hydraulic version
- Pneumatic open / close control (stroke control) master jaws valve
- PTH-N: Normal stroke
- PTH-L: Long stroke
- PTH-F: One fixed Jaw

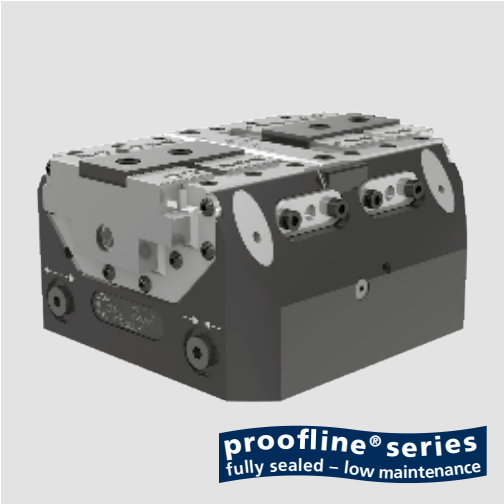

Application/customer benefits

- Compact design
- Master jaws guide protected against swarf and chips
- Highest repeatability
- Highest rigidity
- Linear pressure adjustment

Technical features

- Housing and functional parts hardened for high precision and long life
- Ready for air purge
- Ready for central grease lubrication
- Master jaws with both Tongue & Groove and fine serration 1.5 mm x 60°
- OD and ID clamping
- Pneumatic open / close control (stroke control) master jaws valve (optional)
- Air sensing
- Lubrication with SMW-AUTOBLOK K67 grease
- Stroke control via proximity switches (optional) on all types and sizes except 100 PTH-F
- 100 PTH-F: Only one stroke control via proximity switch for full closed vise

Standard equipment

Self-centering vise without top jaws
All bolts and centering bushings included

Gripping force diagrams

PTH-N ☐100 ☐125 ■160 ■200

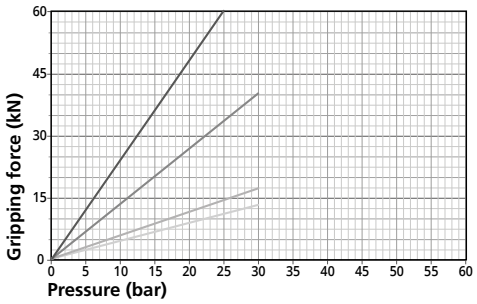

PTH-L ☐100 ☐125 ■160 ■200 ■250

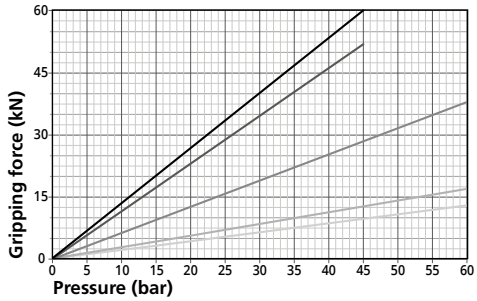

PTH-F ☐100 ☐125 ■160 ■200

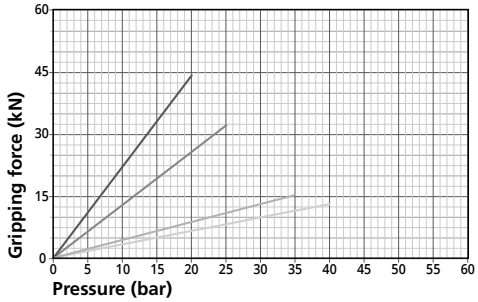

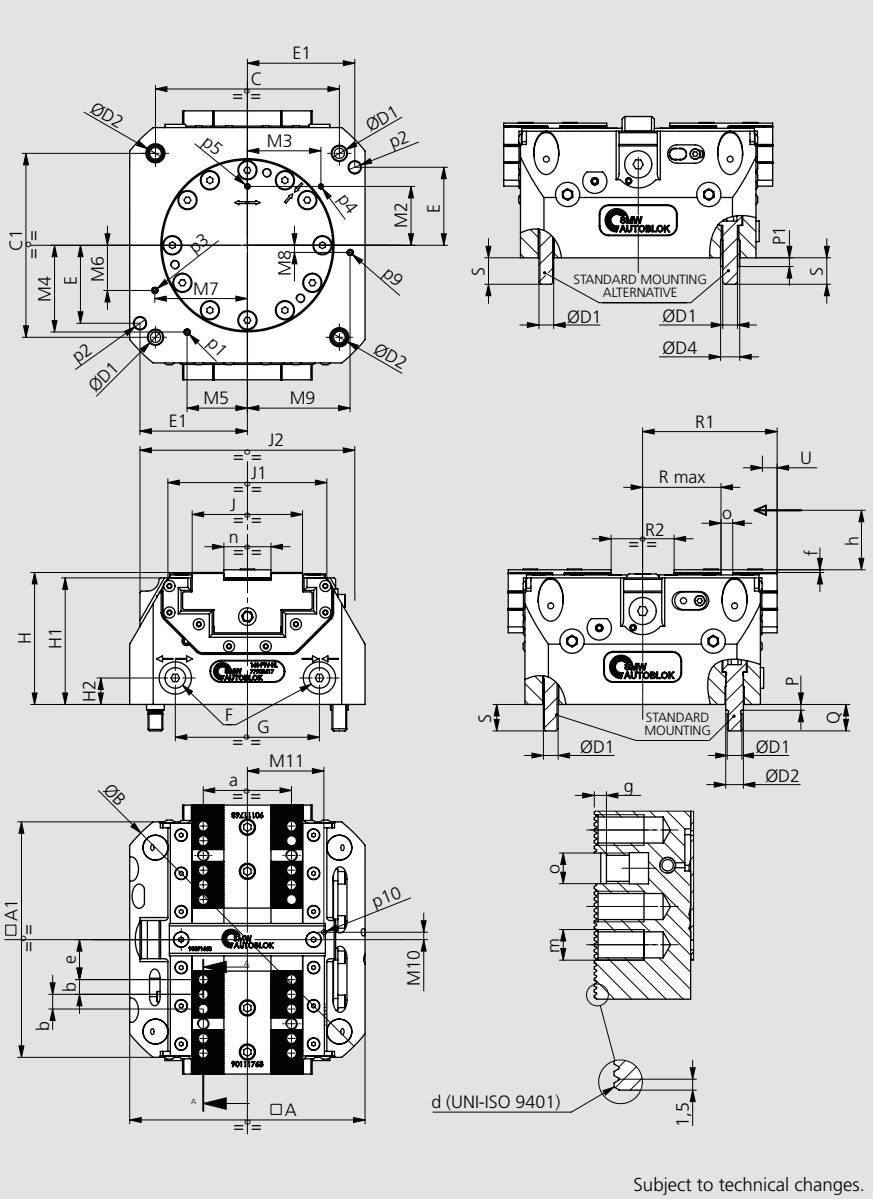

Subject to technical changes.

PTH-N/PTH-L/PTH-F

PROTECTED HYDRAULIC TWIN VISE

- Hydraulic version
- Pneumatic open / close control (stroke control) master jaws valve
- PTH-N: Normal stroke
- PTH-L: Long stroke
- PTH-F: One fixed Jaw

Type	Id.No.	Stroke type	Stroke / jaw [mm]	Max. Clamping force [kN]	Piston area [cm²]	Max. Operating pressure [bar]	Repeatability [mm]	Weight [kg]
100 PTH-N	77905711	NORMAL	2.6			30	0.01	
100 PTH-L	77905811	LONG	6	13	15	60	0.01	6
100 PTH-F	77905911	FIXED JAW	6			40	0.01	
125 PTH-N	77905712	NORMAL	2.6	17		30	0.01	
125 PTH-L	77905812	LONG	6		20	60	0.01	8
125 PTH-F	77905912	FIXED JAW	6	15		35	0.01	
160 PTH-N	77905717	NORMAL	3	40		30	0.01	
160 PTH-L	77905817	LONG	8.4	38	45	60	0.01	15
160 PTH-F	77905917	FIXED JAW	8.4	32		25	0.01	
200 PTH-N	77905721	NORMAL	4.2	60		25	0.02	
200 PTH-L	77905821	LONG	10.2	52	68	45	0.02	25
200 PTH-F	77905921	FIXED JAW	10.2	44		20	0.02	
250 PTH-L	77905826	LONG	15	60	113	45	0.02	35

PTH			100	125	160	200	250
	A	mm	100	125	160	200	210
	A1	mm	110	125	160	200	238
	B(Ø)	mm	136	162	205	255	300
	C	mm	80	100	125	160	180
	C1	mm	80	100	125	160	200
	D1(Ø)	mm	M8	M8	M10	M12	M12
	D2 (Øf7)	mm	10	10	12	14	14
	D4 (Øjs7)	mm	11	11	13	16	16
	E	mm	32	/	53	73	80
	E1	mm	45	/	73	92	90
	F	mm	G1/8"	G1/8"	G1/8"	G1/8"	G1/8"
	G	mm	56	57	98	128	90
	H	mm	75,5	80,5	89,7	97	105
	H1	mm	72	77	86	93	100
	H2	mm	15	17	18	18	20
	J	mm	47	47	75	94	125
	J1	mm	82	100	108	144	180
	J2	mm	100	121	146	166	-
	M2	mm	32	32	40	50	80
	M3	mm	29.5	29.5	50	65	45
	M4	mm	34,2	40,5	59	72,8	89,8
	M5	mm	27.7	38,5	41	52,9	65,2
	M6	mm	14,2	10,6	30,7	39,5	0
	M7	mm	41,1	54,5	62,9	80,9	92
	M8	mm	8,3	4,8	4,9	9,4	6,7
	M9	mm	42,7	55,3	69,8	89,5	76,7
	M10	mm	5	5	5	8	9
	M11	mm	34	34	52	60	78
	P	mm	4	4	4	5	5
	P1	mm	4	4	6	6	6
	Q	mm	15	15	18	20	20
Min. / max. (long stroke)	**R max**	mm	25.6/31.6	25.6/31.6	44.8/53.2	54.5/64.7	51,5/66,5
Min. / max. (normal stroke)	**R max**	mm	25,4/28	25,4/28	45/48	54.5/58.7	-
Min. / max. (fixed jaw)	**R max**	mm	25.6/31.6	25.6/31.6	44.8/53.2	54.5/64.7	-
Min. / max. (long stroke)	**R1**	mm	57.5/63.5	64,5/70,5	82.5/90.9	102.5/112.7	119,5/134,5
Min. / max. (normal stroke)	**R1**	mm	57.4/60	64,4/67	82.5/85.5	102.8/107	-
Min. / max. (fixed jaw)	**R1**	mm	57.5/63.5	64,5/70,5	82.5/90.9	102.5/112.7	-
Min. / max. (long stroke)	**R2**	mm	20/32	20/32	26/42.8	30/50.4	39/69
Min. / max. (normal stroke)	**R2**	mm	19.8/25	19.8/25	26/32	30.6/39	-
Min. / max. (fixed jaw)	**R2**	mm	20/26	20/26	26/34.4	30/40.2	-
	S	mm	15	15	18	20	20
Long stroke	**U**	mm	6	6	8.4	10.2	15
Normal stroke	**U**	mm	2.6	2.6	3	4.2	-
Fixed jaw	**U**	mm	6	6	8.4	10.2	-
	a	mm	35	35	60	80	90
	b	mm	7	7	10	10	12
Serration	**d**	mm	1,5x60°	1,5x60°	1,5x60°	1,5x60°	1,5x60°
Min. / max. (long stroke)	**e**	mm	14.6/20.6	14.6/20.6	18.8/27.2	28.5/38.7	32,5/47,5
Min. / max. (normal stroke)	**e**	mm	14.4/17	14.4/17	19/22	28.5/32.7	-
Min. / max. (fixed jaw)	**e**	mm	14.6/20.6	14.6/20.6	18.8/27.2	28.5/38.7	-
	f	mm	1.8	1.8	1.8	2	2,5
	g	mm	2.7	2.7	3.2	4	4
	h	mm	16	16	25	35	40
	m	mm	M6x10	M6x10	M8x12	M8x12	M10x15
	n (g6)	mm	20	20	32	40	50
	o (H7)	mm	6	6	8	8	10
Lubrication fitting	**p1**	mm	M4	M4	M5	M5	M5
	p2 (øH7)	mm	/	/	8x14	8x14	10x20
Pneumatic open / close - stroke control master jaws or air purge	**p3**	mm	M4	M4	M5	M5	M5
Vise closed	**p4**	mm	M4	M4	M4	M4	M5
Vise open	**p5**	mm	M4	M4	M4	M4	M5
Air sensing connection	**p9**	mm	M4	M4	M5	M5	M5
Air sensing outlet (under front plate)	**p10**	mm	M4	M4	M4	M4	M5

PTP-L-RR

PROTECTED PNEUMATIC TWIN VISE WITH QUICK CHANGE

- Quick jaws change
- Pneumatic open/close control (stroke control) master jaws valve
- Pneumatic version
- PTP-L-RR: Long stroke

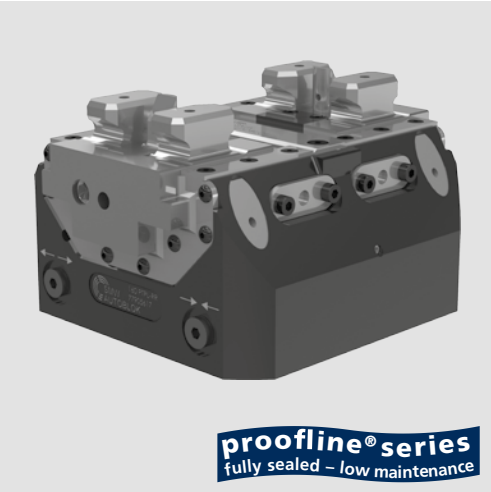

Application/customer benefits

- Compact design
- Master jaws guide protected against swarf and chips
- Highest repeatability
- Highest rigidity
- Linear pressure adjustment
- Quick jaws change

Technical features

- Housing and functional parts hardened for high precision and long life
- Ready for air purge
- Ready for central grease lubrication
- Quick jaw change master jaw
- OD and ID clamping
- Pneumatic open/close control (stroke control) master jaws valve
- Air sensing
- Lubrication with SMW-Autoblok K67 grease
- Stroke control via proximity switches

Standard equipment

Self-centering vise without top jaws
All bolts and centering bushings included

Gripping force diagrams

PTP-L-RR ■ 160 ■ 200

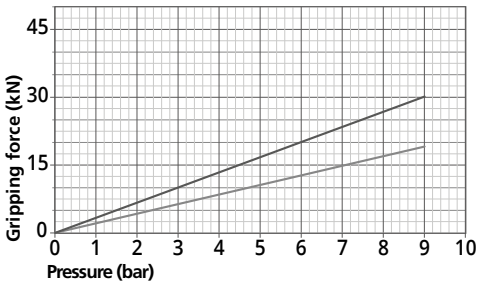

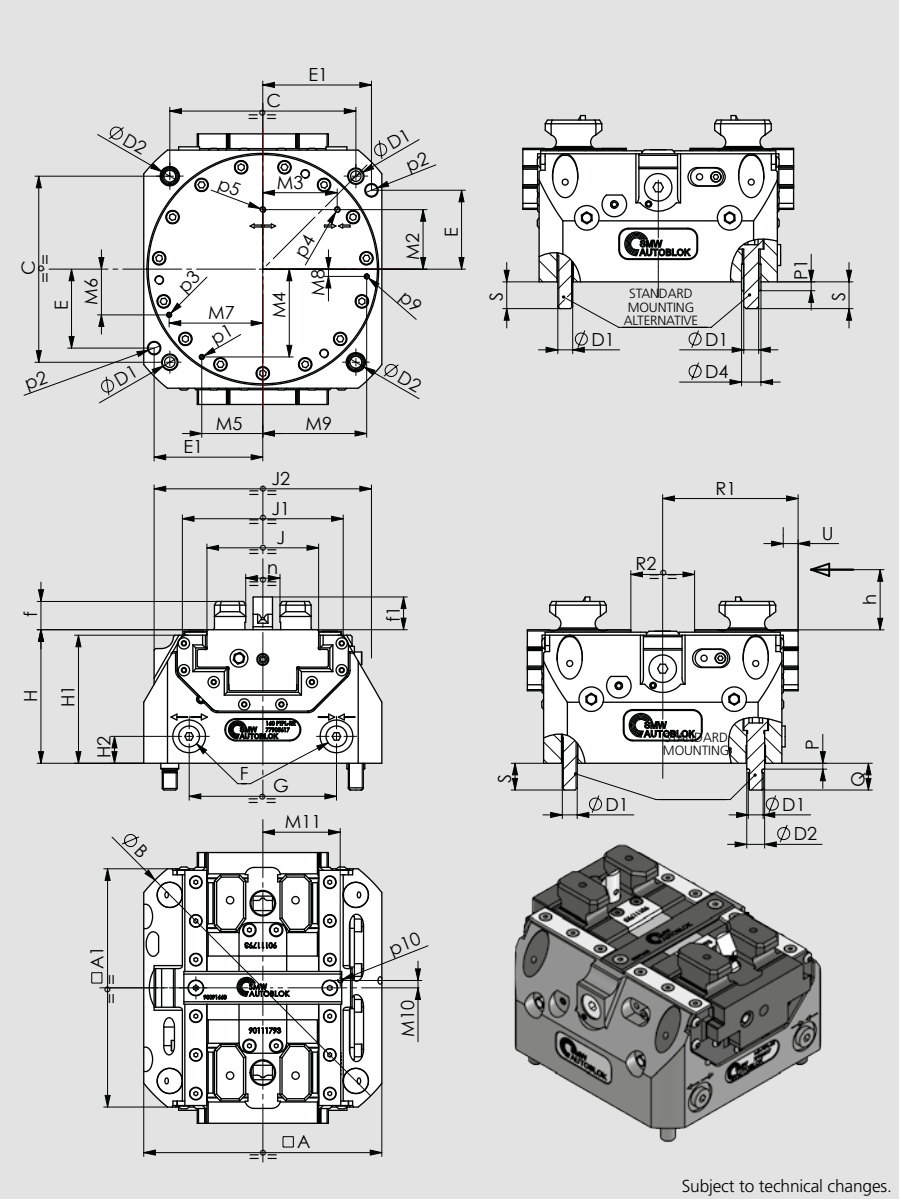

Subject to technical changes.

PTP-L-RR

PROTECTED PNEUMATIC TWIN VISE WITH QUICK CHANGE

- Quick jaws change
- Pneumatic open/close control (stroke control) master jaws valve
- Pneumatic version
- PTP-L-RR: Long stroke

Type	Id.No.	Stroke type	Stroke/jaw [mm]	Max clamping force [kN]	Piston area [cm²]	Max. Operating pressure [bar]	Repeatability [mm]	Weight [kg]
160 PTP-L-RR	77905617	LONG	8,4	19	128	9	0.01	13
200 PTP-L-RR	77905621	LONG	10,2	30	194	9	0.02	23

PTP-RR			160	200
	A	mm	160	200
	A1	mm	160	200
	B(Ø)	mm	205	255
	C	mm	125	160
	D1(Ø)	mm	M10	M12
	D2 (Øf7)	mm	12	14
	D4 (Øjs7)	mm	13	16
	E	mm	53	73
	E1	mm	73	92
	F	mm	G1/8"	G1/8"
	G	mm	99	127
	H	mm	89,7	97
	H1	mm	86	93
	H2	mm	18	18
	J	mm	75	94
	J1	mm	108	144
	J2	mm	146	166
	M2	mm	40	50
	M3	mm	50	65
	M4	mm	59	72,8
	M5	mm	41	52,9
	M6	mm	30,7	39,5
	M7	mm	62,9	80,9
	M8	mm	4,9	9,4
	M9	mm	69,8	89,5
	M10	mm	5	8
	M11	mm	52	60
	P	mm	4	5
	P1	mm	6	6
	Q	mm	18	20
Min/max (long stroke)	**R1**	mm	82.5/90.9	102.5/112.7
Min/max (long stroke)	**R2**	mm	26/42.8	30/50.4
	S	mm	18	20
Long stroke	**U**	mm	8.4	10.2
	f	mm	19	19
	f1	mm	22	22
	h	mm	25	35
	n (H6)	mm	23	38
Lubrication fitting	**p1**	mm	M4	M4
	p2 (øH7)	mm	8x14	8x14
Pneumatic open/close- stroke control m.Jaws or air purge	**p3**	mm	M4	M4
Vise close	**p4**	mm	M4	M4
Vise open	**p5**	mm	M4	M4
Air sensing connection	**p9**	mm	M4	M4
Air sensing outlet (under front plate)	**p10**	mm	M4	M4

PTH-L-RR

PROTECTED HYDRAULIC TWIN VISE WITH QUICK CHANGE

- **Quick jaws change**
- **Pneumatic open/close control (stroke control) master jaws valve**
- **Hydraulic version**
- **PTH-L-RR: Long stroke**

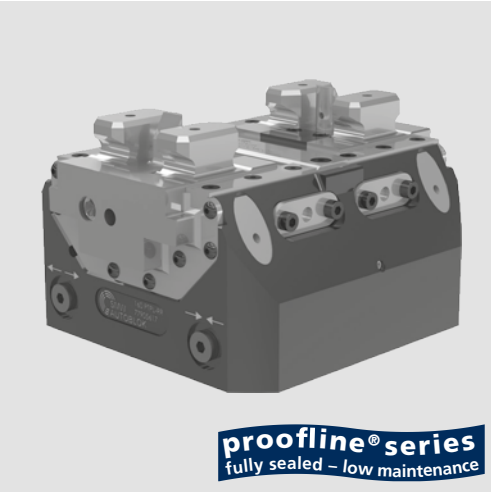

Application/customer benefits

- Compact design
- Master jaws guide protected against swarf and chips
- Highest repeatability
- Highest rigidity
- Linear pressure adjustmen
- Quick jaws change

Technical features

- Housing and functional parts hardened for high precision and long life
- Ready for air purge
- Ready for central grease lubrication
- Quick jaw change master jaw
- OD and ID clamping
- Pneumatic open/close control (stroke control) master jaws valve
- Air sensing
- Lubrication with SMW-Autoblok K67 grease
- Stroke control via proximity switches

Standard equipment

Self-centering vise without top jaws
All bolts and centering bushings included

Gripping force diagrams

PTH-L-RR ■ 160 ■ 200 ■ 250

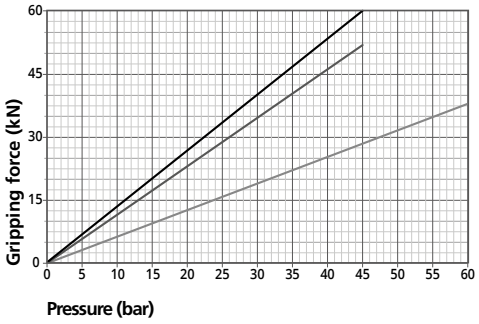

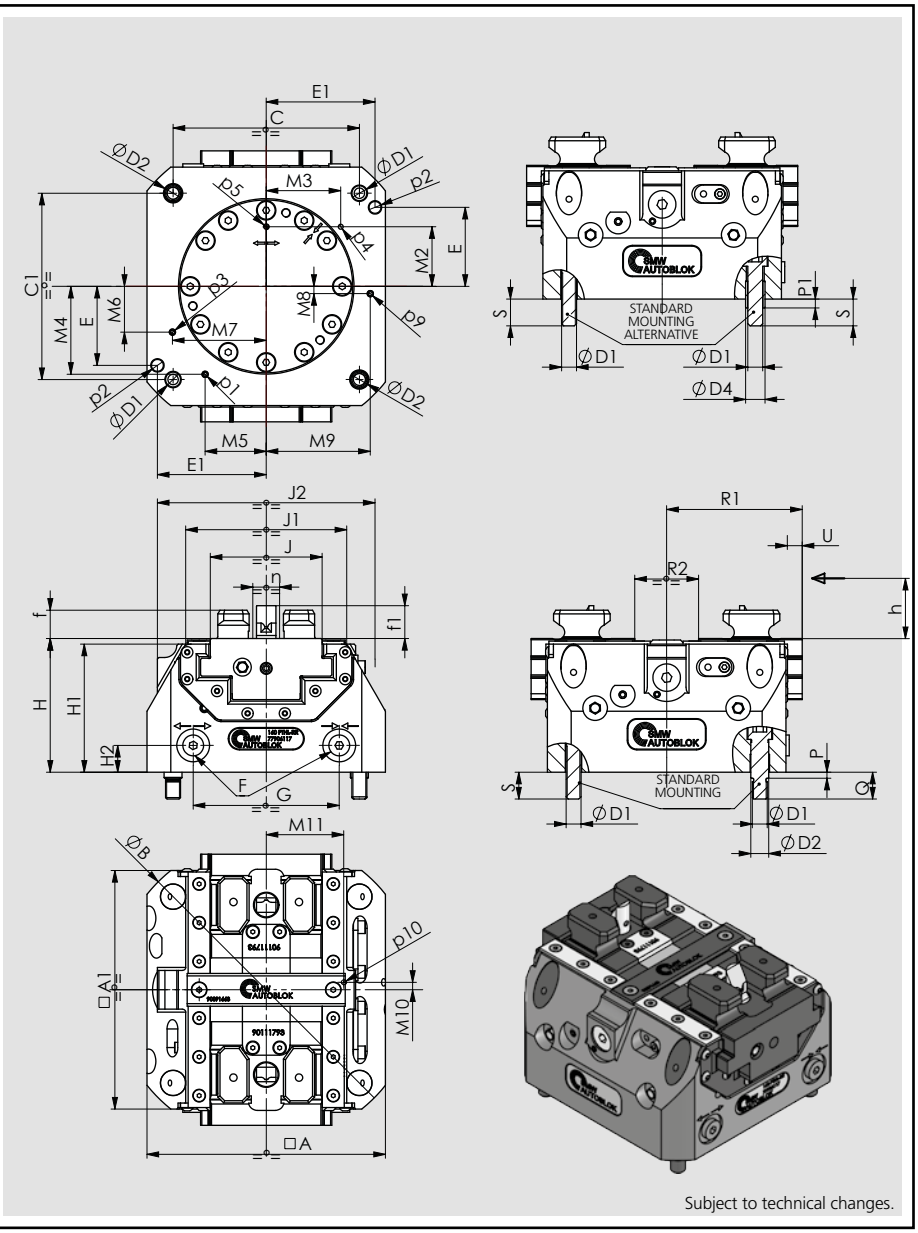

Subject to technical changes.

- Quick jaws change
- Pneumatic open/close control (stroke control) master jaws valve
- Hydraulic version
- PTH-L-RR: Long stroke

PTH-L-RR

PROTECTED HYDRAULIC TWIN VISE WITH QUICK CHANGE

Type	Id.No.	Stroke type	Stroke/jaw [mm]	Max clamping force [kN]	Piston area [cm²]	Max. Operating pressure [bar]	Repeatability [mm]	Weight [kg]
160 PTH-L-RR	77905617	LONG	8,4	19	128	60	0.01	15
200 PTH-L-RR	77905621	LONG	10,2	30	194	45	0.02	25
250 PTH-L-RR	77905621	LONG	15	60	113	45	0.02	35

PTH-RR			160	200	250
	A	mm	160	200	210
	A1	mm	160	200	238
	B(Ø)	mm	205	255	300
	C	mm	125	160	180
	C1	mm	125	160	200
	D1(Ø)	mm	M10	M12	M12
	D2 (Øf7)	mm	12	14	14
	D4 (Øjs7)	mm	13	16	16
	E	mm	53	73	80
	E1	mm	73	92	90
	F	mm	G1/8"	G1/8"	G1/8"
	G	mm	98	128	90
	H	mm	89,7	97	105
	H1	mm	86	93	100
	H2	mm	18	18	20
	J	mm	75	94	125
	J1	mm	108	144	180
	J2	mm	146	166	-
	M2	mm	40	50	80
	M3	mm	50	65	45
	M4	mm	59	72,8	89,8
	M5	mm	41	52,9	65,2
	M6	mm	30,7	39,5	0
	M7	mm	62,9	80,9	92
	M8	mm	4,9	9,4	6,7
	M9	mm	69,8	89,5	76,7
	M10	mm	5	8	9
	M11	mm	52	60	78
	P	mm	4	5	5
	P1	mm	6	6	6
	Q	mm	18	20	20
Min/max (long stroke)	**R1**	mm	82.5/90.9	102.5/112.7	119.5/134.5
Min/max (long stroke)	**R2**	mm	26/42.8	30/50.4	39/69
	S	mm	18	20	20
Long stroke	**U**	mm	8.4	10.2	15
	f	mm	19	19	19
	f1	mm	22	22	22
	h	mm	25	35	40
	n (H6)	mm	23	38	48
Lubrication fitting	**p1**	mm	M5	M5	M5
	p2 (øH7)	mm	8x14	8x14	10x20
Pneumatic open/close- stroke control m.Jaws or air purge	**p3**	mm	M5	M5	M5
Vise close	**p4**	mm	M4	M4	M5
Vise open	**p5**	mm	M4	M4	M5
Air sensing connection	**p9**	mm	M5	M5	M5
Air sensing outlet (under front plate)	**p10**	mm	M4	M4	M5

PTP / PTH

Protected pneumatic and hydraulic Twin Vises

- Mounting instructions
- also for the RR version

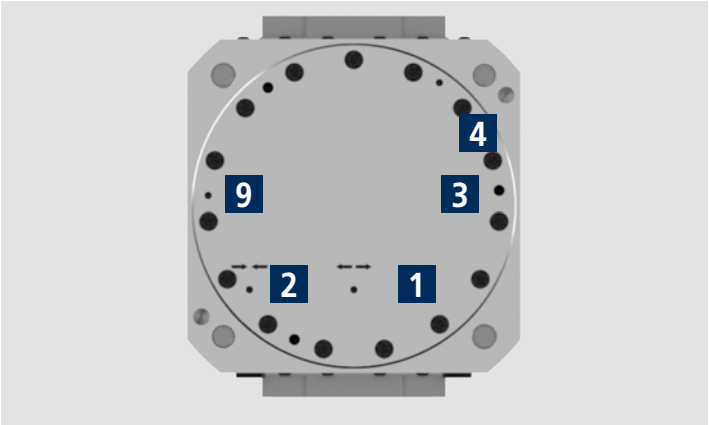

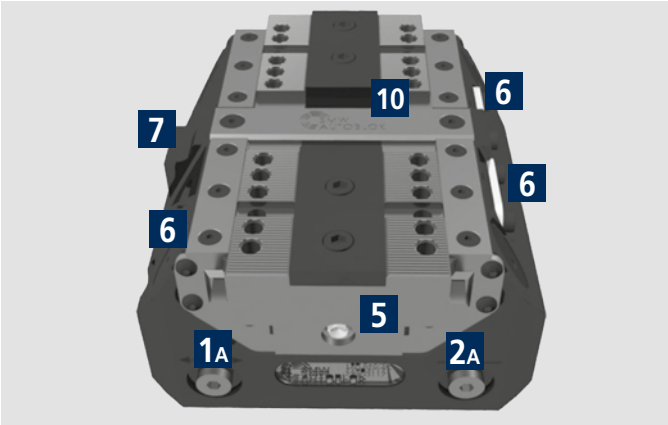

SOLUTION 1 STANDARD

± 0.03 mm to clamping center

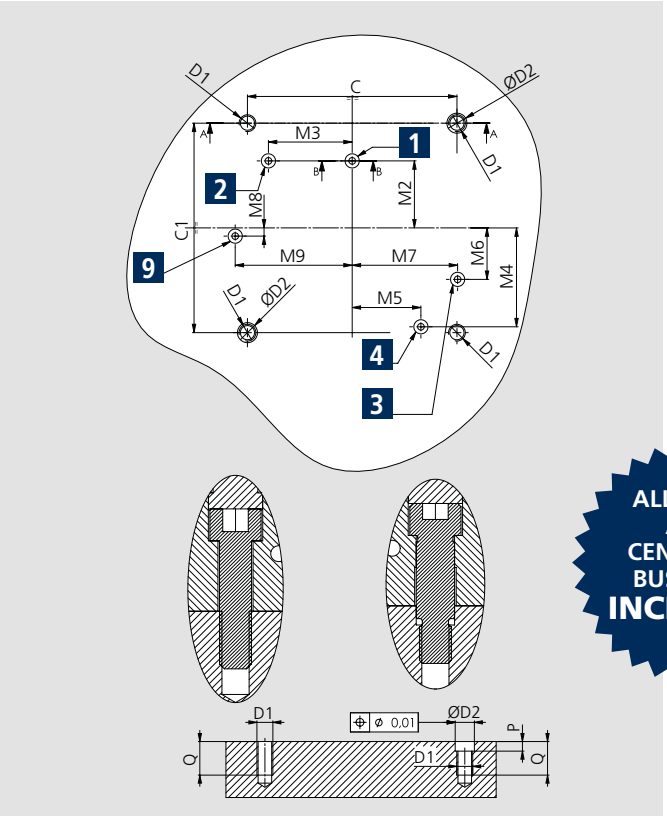

SOLUTION 2 STANDARD

± 0.025 mm to clamping center

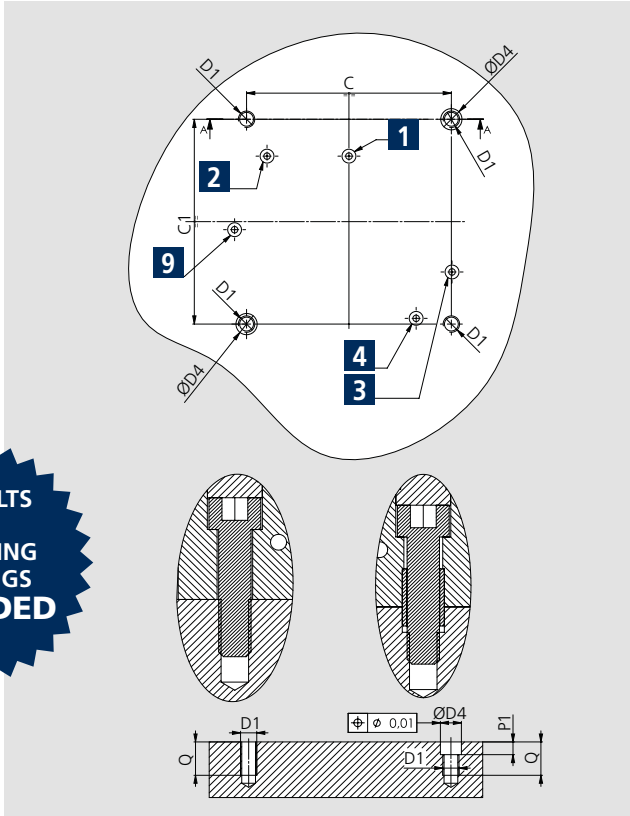

ALL BOLTS AND CENTERING BUSHINGS INCLUDED

FEEDING SEATS: OBLIGATED EXECUTION

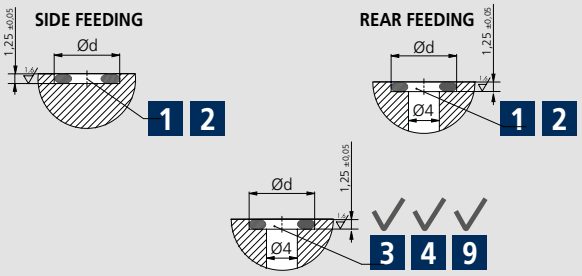

1	Open-Rear feeding	2	Closed-Rear feeding	3	Pneumatic open / close stroke control or air purge connection*
1A	Open-Side feeding	2A	Closed-Side feeding	4	Central lubrication
5	Lubrication fitting	6	Proximity switch seats	7	Pneumatic open/close -stroke control-m.j.valve (optional)
9	Air sensing connection (only bottom)	10	Air sensing outlet (under front plate)		

*The air purge can be used only without the valve.

PT	C	C1	D1	D2H7	D4H7	M2	M3	M4	M5	M6	M7	M8	M9	P	P1	Q	Ød	OR
100	80	80	M8	10	11	32	29.5	34.2	27.7	14.2	41.1	7	43	6	6	18	8	OR2018
125	100	100	M8	10	11	32	29.5	40.5	38.5	10.6	54.5	4.8	55.3	6	6	18	8	OR2018
160	125	125	M10	12	13	40	50	59	41	30.7	62.9	4.9	69.8	6	7	21	8	OR2018
200	160	160	M12	14	16	50	65	72.8	52.9	39.5	80.9	9.4	89.5	7	7	24	8.8	OR2021
250	180	200	M12	14	16	80	45	89.8	65.2	0	92	6.7	76.7	7	7	24	8.8	OR2021

NOTES

STV-2N / STV-2L

Spring and air operated Twin Vise

- Protected and springs clamping
- Pneumatic open / close control (stroke control) master jaws valve
- 2 Jaws
- STV-2N: Normal stroke
- STV-2L: Long stroke

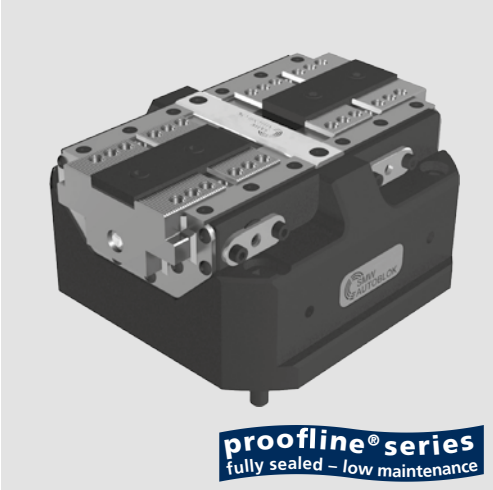

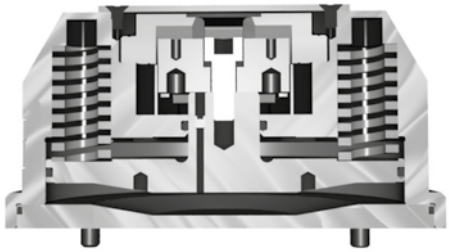

Application/customer benefits

- Compact design
- Linear pressure adjustment
- Highest repeatability
- Highest rigidity

Technical features

- Spring to clamp, pneumatic open
- Protected **1**
- Increase of the clamping force via Turbo function
- Housing and functional parts hardened for high precision and long life
- Ready for air purge
- Master jaws with both tongue & groove and fine serration 1.5 mm x 60°
- OD clamping only
- Safety valve SAB-1 **2** to maintain air pressure during pallet transportation / storage and machining without feed (optional)
- Pneumatic open / close control (stroke control) master jaws valve (optional)
- Lubrication with SMW-AUTOBLOK K67 grease
- Stroke control via proximity switches (optional)
- Air sensing

Standard equipment

Self-centering vise without top jaws
All bolts and centering bushings included

ROTATION USE
The vise can be used up to maximum 500 rpm only if operated with springs + Turbo system (at minimum 3 bar) and with top jaws weight not higher than the standard ones.

Gripping force diagrams

STV-2N ■225 ■180 ■125
STV-2L □225 ■180 ■125

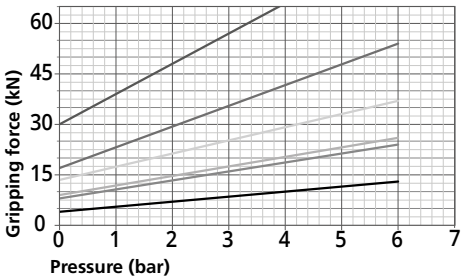

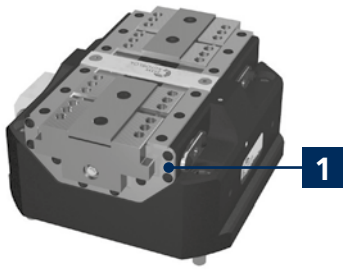

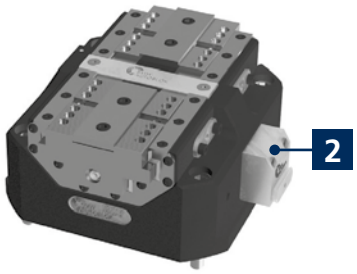

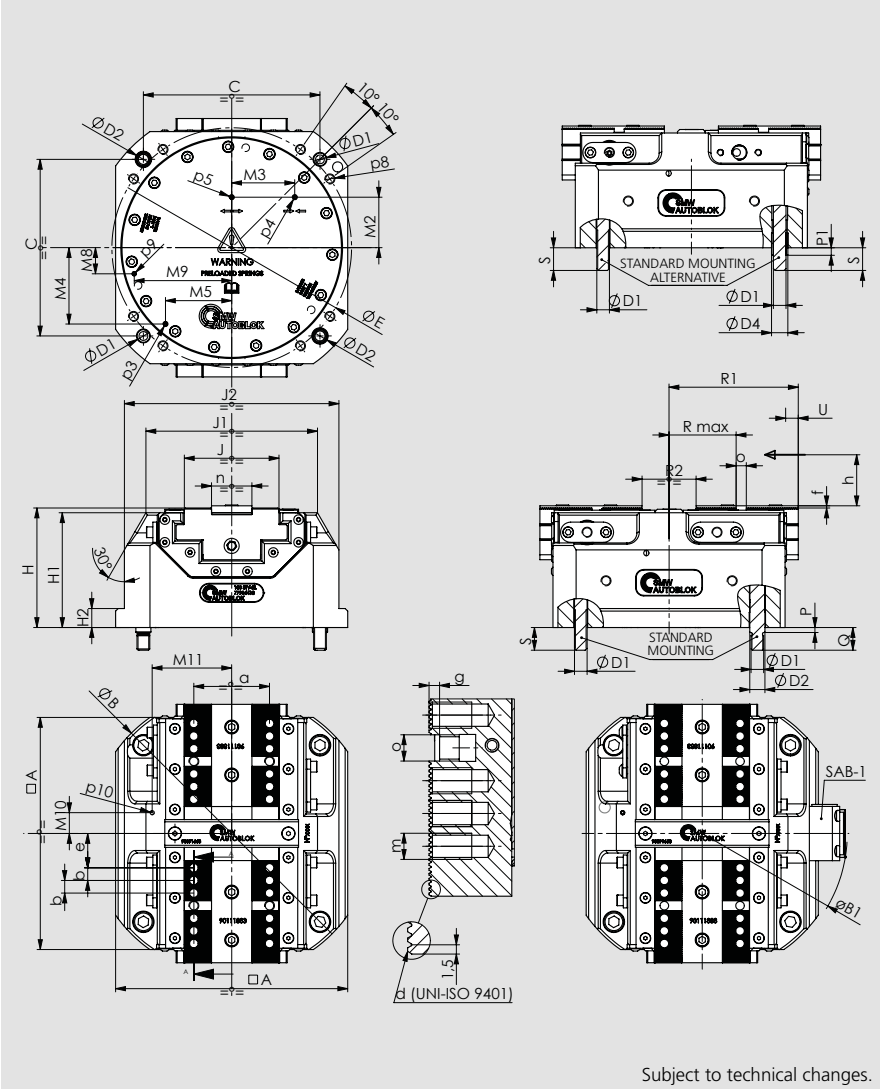

Subject to technical changes.

STV-2N / STV-2L

- Protected and springs clamping
- Pneumatic open / close control (stroke control) master jaws valve
- 2 jaws
- STV-2N: Normal stroke
- STV-2L: Long stroke

SPRING AND AIR OPERATED SPRING VISE

Type	Id. No.	Type stroke	Max. Clamping force middle stroke [kN]		Piston area [cm]	Re-opening pressure [bar]	Operating pressure max. [bar]	Min. / max. Operating pressure [bar]	Repeatability [mm]	Weight [kg]
			Only springs	Springs + Turbo						
125 STV-2N	77904312	NORMAL	9	26	78	5	6	-	0.01	7
125 STV-2L	77904412	LONG	4	13						
180 STV-2N	77904318	NORMAL	17	54	170	5	6	-	0.01	17.5
180 STV-2L	77904418	LONG	8	24						
225 STV-2N	77904322	NORMAL	30	66	250	6	4	-	0.02	28
225 STV-2L	77904422	LONG	13.5	37			6	-		
125 STV-2N + SAB-1	77904812*	NORMAL	-	-	-	-	-	3.5 / 6	-	-
125 STV-2L + SAB-1	77904912*	LONG	-	-	-	-	-	3.5 / 6	-	-
180 STV-2N + SAB-1	77904818*	NORMAL	-	-	-	-	-	3.5 / 6	-	-
180 STV-2L + SAB-1	77904918*	LONG	-	-	-	-	-	3.5 / 6	-	-
225 STV-2N + SAB-1	77904822*	NORMAL	-	-	-	-	-	3.5 / 4	-	-
225 STV-2L + SAB-1	77904922*	LONG	-	-	-	-	-	3.5 / 6	-	-

* Id. No. Twin Vise included the SAB-1. For example, 77904812 is composed by 125STV-2N Id. No. 77904312 plus SAB-1 Id. No. 27581810

STV-2			125	180	225
	A	mm	125	184	225
	B (Ø)	mm	162	225	284
SAB-1 valve overall dimension	**B1 (Ø)**	mm	186	230	276
	C	mm	100	140	180
	D1(Ø)	mm	M8	M10	M12
	D2 (Øf7)	mm	10	12	14
	D4 (Øjs7)	mm	11	13	16
	E (ø)	mm	136	190	240
	H	mm	80.5	94.7	102
	H1	mm	77	91	98
	H2	mm		15	15
	J	mm	47	75	94
	J1	mm	100	136	172
	J2	mm	125	170	216
	M2	mm	32	40	50
	M3	mm	29.5	50	65
	M4	mm	40.5	60.5	79
	M5	mm	38.5	52.5	63
	M8	mm	10.6	20.7	15
	M9	mm	54.5	77.3	99.9
	M10	mm	10.5	16.5	15
	M11	mm	46	63	81
	P	mm	4	4	5
	P1	mm	4	6	6
	Q	mm	15	18	20
Min. / max. (long stroke)	**R max**	mm	25.6 / 31.6	44.8 / 53.2	54.5 / 64.7
Min. / max. (normal stroke)	**R max**	mm	25.4 / 28	45 / 48	54.5 / 58.7
Min. / max. (long stroke)	**R1**	mm	64.5 / 70.5	94 / 102.4	114.5 / 124.7
Min. / max. (normal stroke)	**R1**	mm	64.4 / 67	94.5 / 97.5	114.8 / 119
Min. / max. (long stroke)	**R2**	mm	20 / 32	26 / 42.8	30 / 50.4
Min. / max. (normal stroke)	**R2**	mm	19.8 / 25	26 / 32	30.6 / 39
	S	mm	15	18	20
Long stroke	**U**	mm	6	8.4	10.2
Normal stroke	**U**	mm	2.6	3	4.2
	a	mm	35	60	80
	b	mm	7	10	10
Serration	**d**	mm	1.5 x 60°	1.5 x 60°	1.5 x 60°
Min. / max. (long stroke)	**e**	mm	14.6 / 20.6	18.8 / 27.2	28.5 / 38.7
Min. / max. (normal stroke)	**e**	mm	14.4 / 17	19 / 22	28.5 / 32.7
	f	mm	1.8	1.8	2
	g	mm	2.7	3.2	4
	h	mm	16	25	35
	m	mm	M6x10	M8x12	M8x12
	n (g6)	mm	20	32	40
	o (H7)	mm	6	8	8
Pneumatic open / close stroke control or air purge	**p3**	mm	M4	M4	M4
Vise closed	**p4**	mm	M4	M4	M4
Vise open	**p5**	mm	M4	M4	M4
	p8	mm	M6x12	M8x16	M10x18
	p9	mm	M4	M4	M4
	p10	mm	M4	M4	M4

STV-3N / STV-3L

SPRING AND AIR OPERATED TWIN VISE

- Protected and springs clamping
- Pneumatic open / close control (stroke control) master jaws valve
- 3 Jaws
- STV-3N: Normal stroke
- STV-3L: Long stroke

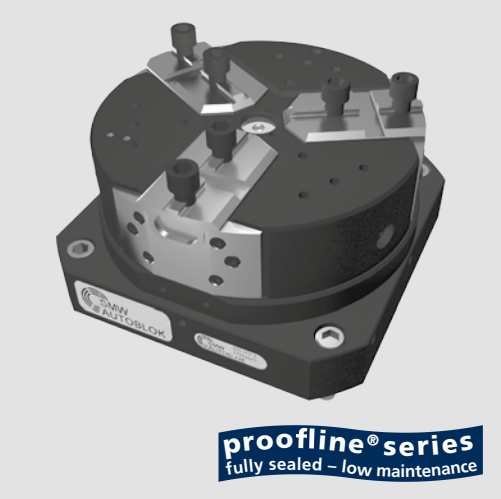

Application/customer benefits

- Compact design
- Master jaws guide protected against swarf and chips
- Highest repeatability
- Highest rigidity

Technical features

- Spring to clamp, pneumatic open
- Protected 1
- Increase of the clamping force via Turbo function
- Housing and functional parts hardened for high precision and long life
- Ready for air purge
- 3 jaw interfaces: Tongue & groove
- OD clamping only
- Safety valve SAB-1 2 to maintain air pressure during pallet transportation / storage and machining without feed (optional)
- Pneumatic open / close control (stroke control) master jaws valve (optional)
- Lubrication with SMW-AUTOBLOK K67 grease

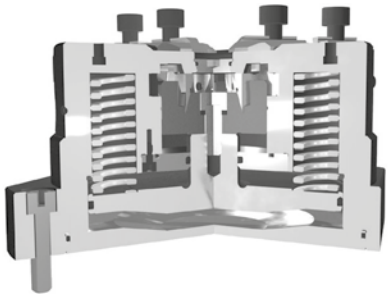

Standard equipment

Self-centering vise without top jaws
All bolts and centering bushings included

ROTATION USE
The vise can be used up to max 1000 rpm (standard stroke version) and max 800 rpm (long stroke version) only if operated with springs + Turbo system (at minimum 3 bar) and with top jaws weight not higher than the standard ones.

Gripping force diagrams

STV-3N ■225 ■180
STV-3L □225

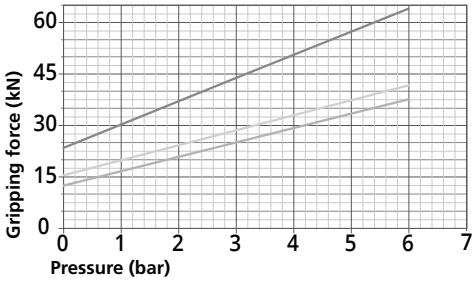

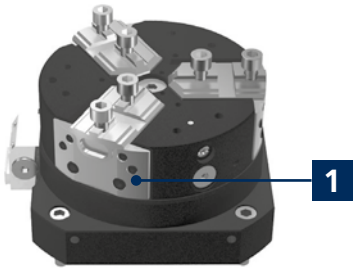

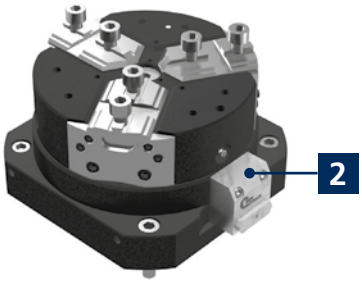

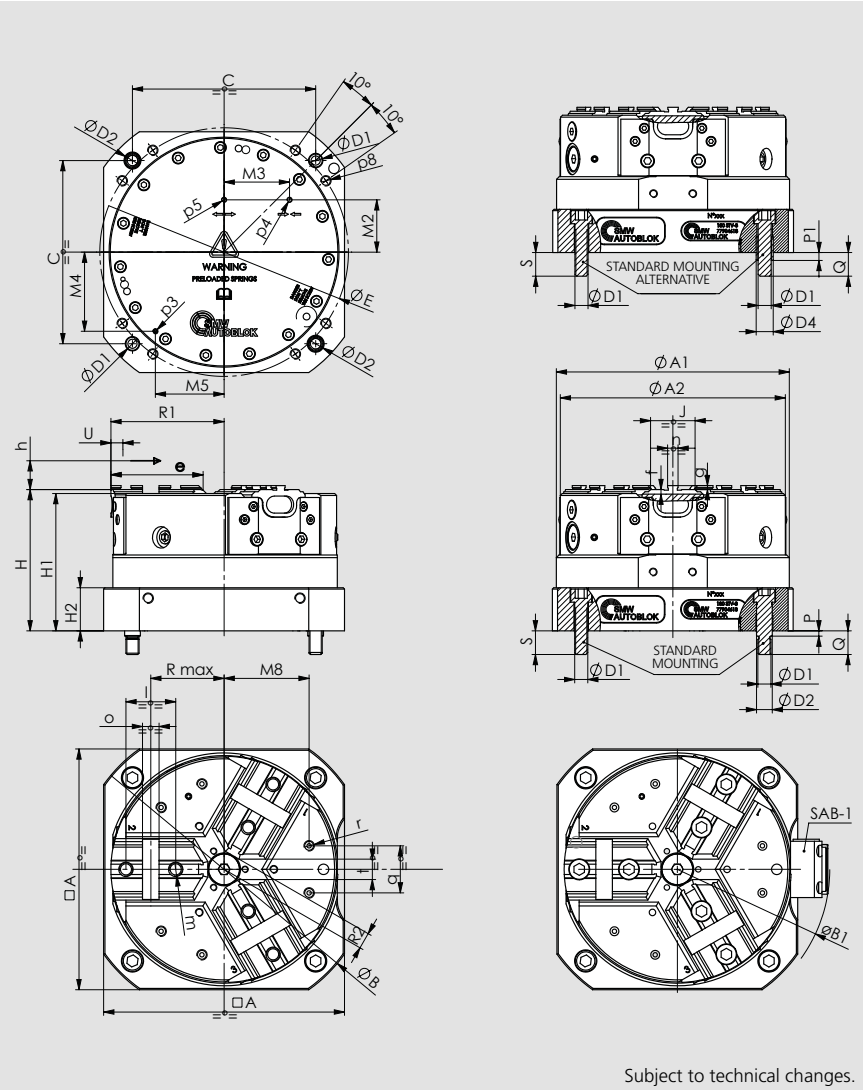

Subject to technical changes.

STV-3N / STV-3L

SPRING AND AIR OPERATED TWIN VISE

- Protected and springs clamping
- Pneumatic open / close control (stroke control) master jaws valve
- 3 Jaws
- STV-3N: Normal stroke
- STV-3L: Long stroke

Type	Id. No.	Stroke type	Max. clamping force middle stroke [kN]		Stroke / jaw [mm]	Piston area [cm²]	Re-opening pressure [bar]	Max. operating pressure [bar]	Min. / max. operating pressure [bar]	Weight [kg]
			Only springs	Springs + Turbo						
180 STV-3N	77904618	NORMAL	13	38	3.8	170	5	6	-	18
225 STV-3N	77904622	NORMAL	24	64	4.2	250	6	6	-	29.5
225 STV-3L	77904722	LONG	16	42	8	250	6	6	-	29.5
180 STV-3N + SAB-1	77905018*	NORMAL	-	-	-	-	-	-	3.5 / 6	-
225 STV-3N + SAB-1	77905022*	NORMAL	-	-	-	-	-	-	3.5 / 6	-
225 STV-3L + SAB-1	77905122*	LONG	-	-	-	-	-	-	3.5 / 6	-

* Id. No. Twin Vise included the SAB-1. For example, 77905018 is composed by 180STV-3N Id. No. 77904618 plus SAB-1 Id. No. 27581810

STV-3			180	225
	A	mm	184	225
	A1	mm	178	222
	A2	mm	172	216
	B (Ø)	mm	225	284
SAB-1 valve overall dimension	**B1 (Ø)**	mm	233	276
	C	mm	140	180
	D1(Ø)	mm	M10	M12
	D2 (Øf7)	mm	12	14
	D4 (Øjs7)	mm	13	16
	E (ø)	mm	190	240
	H	mm	108	115
	H1	mm	105	112
	H2	mm	33	38
	J	mm	34	46
	M2	mm	40	50
	M3	mm	50	65
	M4	mm	60.5	79
	M5	mm	52.5	63
	M8	mm	65	80
	P	mm	4	5
	P1	mm	6	6
	Q	mm	18	20
Min. / max. (normal stroke)	**R max**	mm	52.2 / 56	67.8 / 72
Min. / max. (normal stroke)	**R1**	mm	82.7 / 86.5	103.8 / 108
Min. / max. (normal stroke)	**R2**	mm	8.7 / 12.5	12.8 / 17
Min. / max. (long stroke)	**R max**	mm	/	68 / 76
Min. / max. (long stroke)	**R1**	mm	/	104.5 / 112.5
Min. / max. (long stroke)	**R2**	mm	/	9 / 17
	S	mm	18	20
Normal stroke	**U**	mm	3,8	4.2
Long stroke	**U**	mm	/	8
	e	mm	70	87
	f	mm	3.5	3.5
	g	mm	3	3
	h	mm	25	35
	l	mm	38	44.4
	m	mm	M10x12	M12x14
	n (h8)	mm	7.94	7.94
	o (H7)	mm	12.68	12.68
Pneumatic open / close stroke control or air purge	**p3**	mm	M4	M4
Vise closed	**p4**	mm	M4	M4
Vise open	**p5**	mm	M4	M4
	p8	mm	M8x16	M10x18
	q	mm	36	45
	r	mm	M8x10	M8x10
Min. / max. (normal stroke)	**t**	mm	9 / 15.6	13.5 / 20.9
Min. / max. (long stroke)	**t**	mm	/	6.8 / 20.9

STV

Spring and air operated Twin Vise

■ Mounting instructions

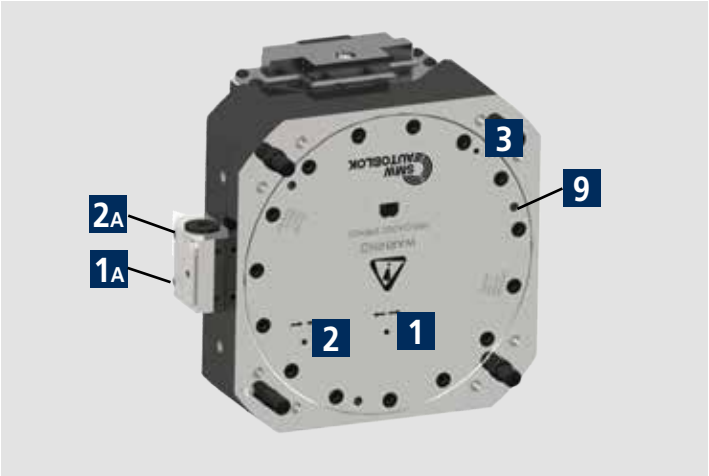

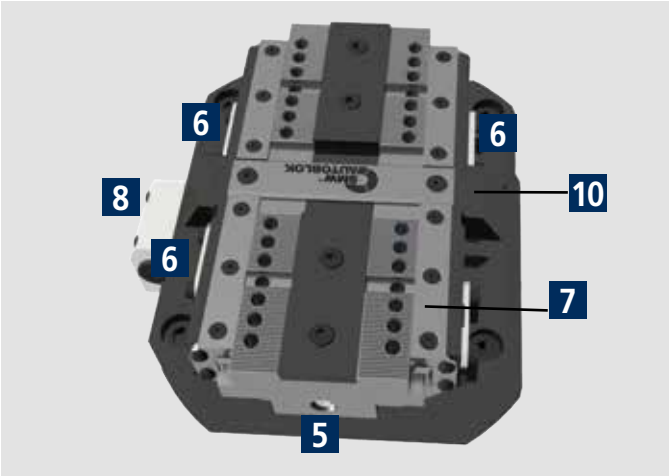

SOLUTION 1 STANDARD

± 0,03 mm to clamping center

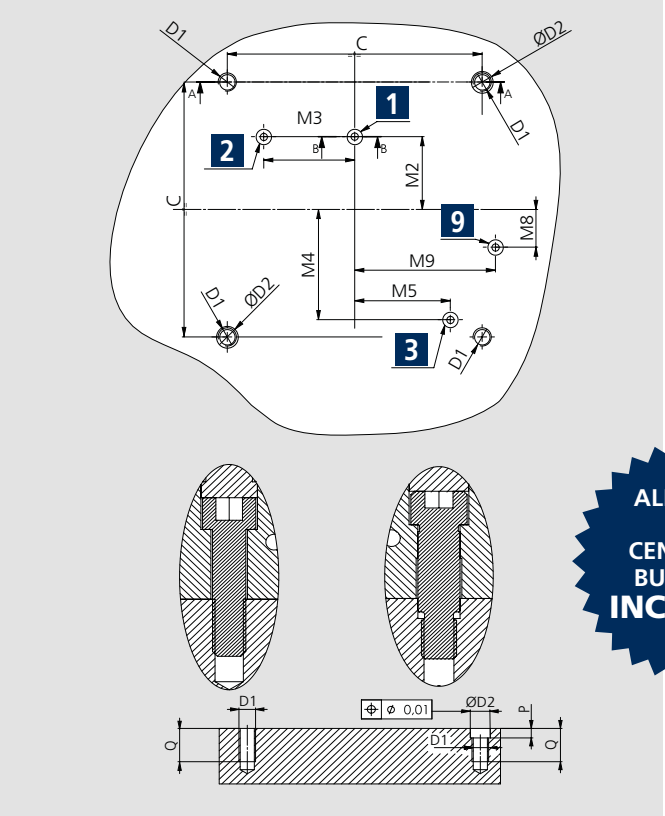

SOLUTION 2 STANDARD

± 0,025 mm to clamping center

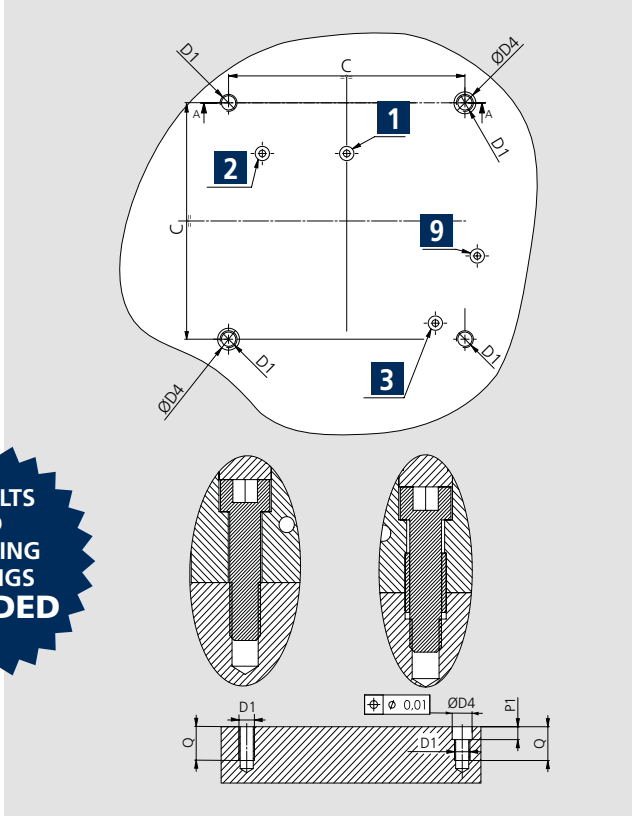

ALL BOLTS AND CENTERING BUSHINGS INCLUDED

FEEDING SEATS: OBLIGATED EXECUTION

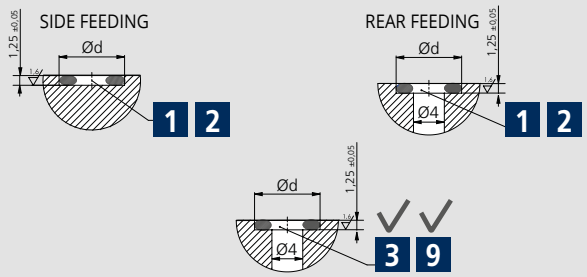

1	Open-Rear feeding	**2**	Closed-Rear feeding	**3**	Pneum.open close stroke control or Air purge*
1A	Open-Side feeding	**2A**	Closed-Side feeding	**5**	Lubrication fitting
6	Proximity switches seats	**7**	Pneumatic open / close stroke control valve (optional)	**8**	Safety valve SAB-1 (optional)
9	Air sensing connection** (only bottom)	**10**	Air sensing outlet** (under front plate)		

* The air purge can be used only without the valve.
** Points 9 and 10 only available on STV-2.

STV	C	D1	D2H7	D4H7	M2	M3	M4	M5	M8	M9	P	P1	Q	Ød	OR
125	100	M8	10	11	32	29.5	40.5	38.5	10.6	54.5	6	6	18	8	OR2018
180	140	M10	12	13	40	50	60.5	52.5	20.7	77.3	6	7	21	8.8	OR2021
225	180	M12	14	16	50	65	79	63	15	99.9	7	7	24	8.8	OR2021

NOTES

TVP-N/TVP-L/TVP-F

PNEUMATIC TWIN VISE

- TVP-N: Normal stroke
- TVP-L: Long stroke
- TVP-F: One fixed jaw

Application/customer benefits

- Compact design
- Linear pressure adjustment
- Highest repeatability
- Highest rigidity

Technical features

- H7 quality pilot bore (see p2 below)
- Housing and functional parts hardened for high precision and long life
- Ready for air purge
- Ready for central grease lubrication
- Master jaws with both tongue & groove and fine serration 1.5 mm x 60°
- OD and ID clamping
- Lubrication with SMW-AUTOBLOK K67 grease
- Stroke control via proximity switches (optional)

Standard equipment

Self-centering vise without top jaws
All bolts and centering bushings included

Gripping force diagrams

TVP-N ☐100 ☐160 ☐200 ☐250 ■315

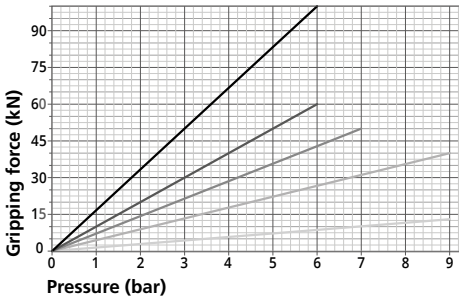

TVP-L ☐100 ☐160 ☐200 ☐250 ■315

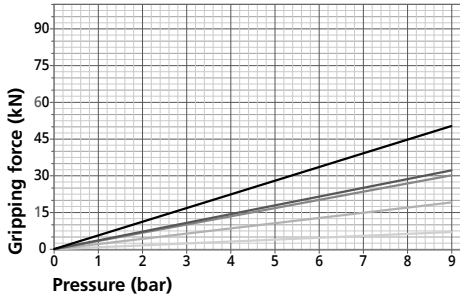

TVP-F ☐100 ☐160 ☐200 ☐250 ■315

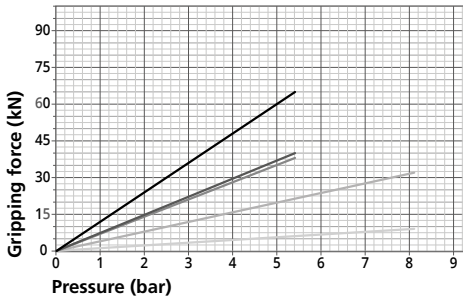

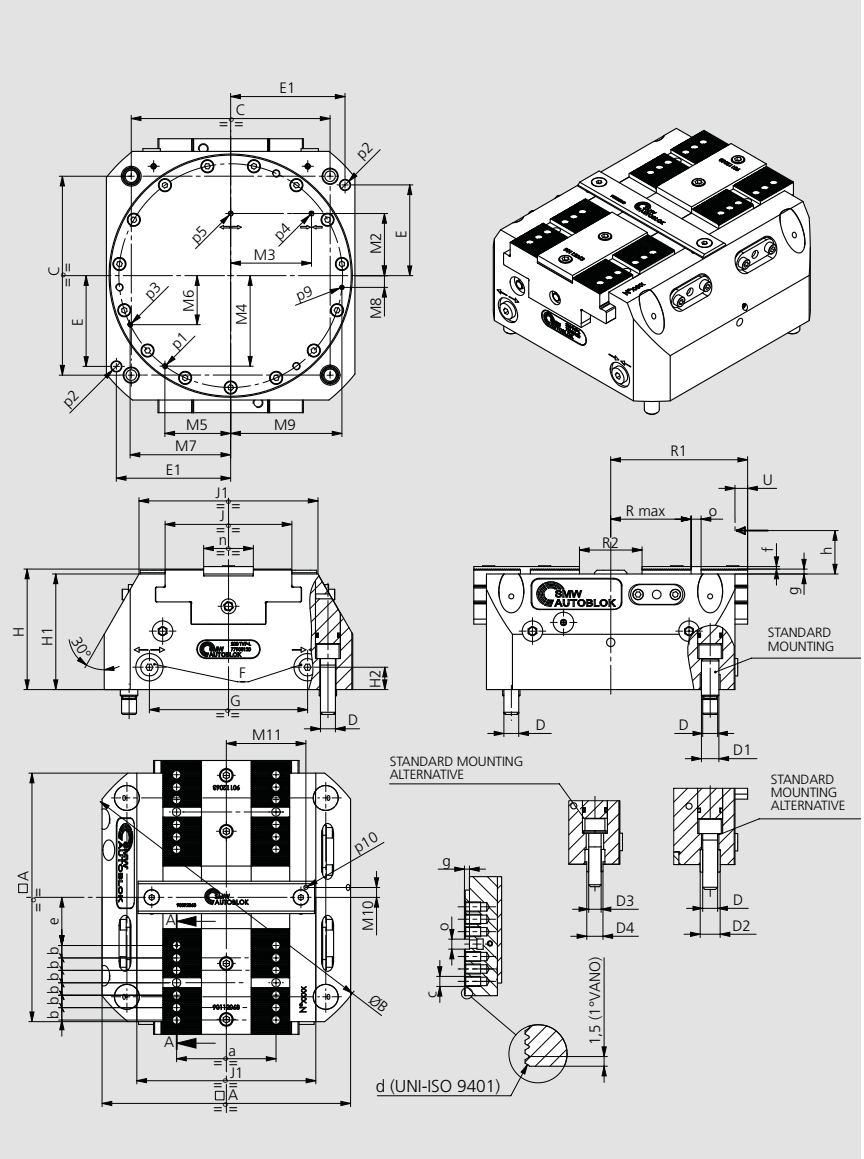

Subject to technical changes.

TVP-N/TVP-L/TVP-F

PNEUMATIC TWIN VISE

- TVP-N: Normal stroke
- TVP-L: Long stroke
- TVP-F: One fixed jaw

Type	Id. No.	Stroke type	Max. clamping force [kN]	Stroke / jaw [mm]	Operating pressure [bar]	Repeatability [mm]	Weight [kg]
100 TVP-N	77903010	NORMAL	13	2.6	9	0.01	4.3
100 TVP-L	77903110	LONG	7	6	9	0.01	4.3
100 TVP-F	77903210	FIXED JAW	9	6	9	0.01	4.3
160 TVP-N	77903016	NORMAL	40	3	9	0.01	13
160 TVP-L	77903116	LONG	19	8.4	9	0.01	13
160 TVP-F	77903216	FIXED JAW	32	8.4	9	0.01	13
200 TVP-N	77903020	NORMAL	50	4.2	7	0.02	23
200 TVP-L	77903120	LONG	30	10.2	9	0.02	23
200 TVP-F	77903220	FIXED JAW	38	10.2	6	0.02	23
250 TVP-N	77903025	NORMAL	60	5.3	6	0.02	39
250 TVP-L	77903125	LONG	32	15	9	0.02	39
250 TVP-F	77903225	FIXED JAW	40	15	6	0.02	39
315 TVP-N	77903031	NORMAL	100	6.4	6	0.03	84
315 TVP-L	77903131	LONG	50	18	9	0.03	84
315 TVP-F	77903231	FIXED JAW	65	18	6	0.03	84

TVP			100	160	200	250	315
	A	mm	100	160	200	250	315
	B(Ø)	mm	132	205	255	314	394
	C	mm	80	125	160	200	250
	D(Ø)	mm	M8x15	M10x18	M12x20	M12x20	M16x23
	D1 (Øf7)	mm	10x4	12x4	14x5	14x5	18x6
	D2 (Øjs7)	mm	11x4	13x6	16x6	16x6	21x6
	D3	mm	-	-	M10x18	-	-
	D4 (Øjs7)	mm	-	-	13x6	-	-
	E	mm	32	53	73	77	105
	E1	mm	45	73	92	115	140
	F	mm	M5	G1/8"	G1/8"	G1/8"	G1/8"
	G	mm	59.3	99	127.3	157	200.8
	H	mm	75.5	89.7	97	105	139
	H1	mm	72	86	93	100	133
	H2	mm	15	18	18	20	25
	J	mm	47	75	102	125	160
	J1	mm	72	108	144	180	230
	M2	mm	32	40	50	64	80
	M3	mm	29.5	50	65	75	90
	M4	mm	34.2	59	72.8	89.8	117.7
	M5	mm	27.7	41	52.9	65.2	79.4
	M6	mm	14.2	30.7	39.5	48.7	57.8
	M7	mm	41.1	62.9	80.9	99.8	129.7
	M8	mm	8.3	4.9	9.4	11.6	12.4
	M9	mm	42.7	69.8	89.5	110.4	141.5
	M10	mm	5	5	8	11	12
	M11	mm	34	52	64	78	102
Lubrication	**p1**	mm	M4	M4	M4	M5	M5
	p2 ØH7	mm	6x14	8x14	8x14	10x20	12x20
Air purge	**p3**	mm	M4	M4	M4	M5	M5
Vise closed	**p4**	mm	M4	M4	M4	M5	M5
Vise open	**p5**	mm	M4	M4	M4	M5	M5
Air sensing connection	**p9**	mm	M4	M4	M4	M5	M5
Air sensing outlet	**p10**	mm	M4	M4	M4	M6	M6
Min. / max. (long stroke)	**R2**	mm	20 / 32	26 / 42.8	30 / 50.4	39 / 69	50 / 86
Min. / max. (long stroke)	**R1**	mm	50 / 56	82.5 / 90.9	100 / 110.2	119.5 / 134.5	151.5 / 169.5
Min. / max. (long stroke)	**Rmax**	mm	25.6 / 31.6	44.8 / 53.2	54.5 / 64.7	51.5 / 66.5	81.5 / 99.5
Min. / max. (normal stroke)	**R2**	mm	19.8 / 25	26 / 32	30.6 / 39	34.4 / 45	49.2 / 62
Min. / max. (normal stroke)	**R1**	mm	47.4 / 50	82.5 / 85.5	95.8 / 100	119.7 / 125	151.1 / 157.5
Min. / max. (normal stroke)	**Rmax**	mm	25.4 / 28	45 / 48	54.5 / 58.7	55.7 / 61	87.1 / 93.5
Min. / max. (fixed jaw)	**R2**	mm	20 / 26	26 / 34.4	30 / 40.2	39 / 54	56 / 74
Min. / max. (fixed jaw)	**R1**	mm	50 / 56	82.5 / 90.9	100 / 110.2	119.5 / 134.5	151.5 / 169.5
Min. / max. (fixed jaw)	**Rmax**	mm	25.6 / 31.6	44.8 / 53.2	54.5 / 64.7	51.5 / 66.5	81.5 / 99.5
Long stroke	**U**	mm	6	8.4	10.2	15	18
Normal stroke	**U**	mm	2.6	3	4.2	5.3	6.4
Fixed jaw stroke	**U**	mm	6	8.4	10.2	15	18
	a	mm	35	60	80	90	120
	b	mm	7	10	10	12	15
	c	mm	M6x10	M8x12	M8x12	M10x15	M12x17
Serration	**d**	mm	1.5 x 60°	1.5 x 60°	1.5 x 60°	1.5 x 60°	1.5 x 60°
Min. / max. (normal stroke)	**e**	mm	14.4 / 17	19 / 22	28.5 / 32.7	24.7 / 30	33.1 / 39.5
Min. / max. (long stroke)	**e**	mm	14.6 / 20.6	18.8 / 27.2	28.5 / 38.7	32.5 / 47.5	42.5 / 60.5
Min. / max. (fixed jaw)	**e**	mm	14.6 / 20.6	18.8 / 27.2	28.5 / 38.7	32.5 / 47.5	42.5 / 60.5
	f	mm	1.8	1.8	2	2.5	2.5
	g	mm	2.7	3.2	4	4	4
	h	mm	16	25	35	40	40
	o (H7)	mm	6	8	8	10	12
	n (g6)	mm	20	32	40	50	60

TVH-N/TVH-L/TVH-F

HYDRAULIC TWIN VISE

- TVH-N: Normal stroke
- TVH-L: Long stroke
- TVH-F: One fixed jaw

Application/customer benefits

- Compact design
- Linear pressure adjustment
- Highest repeatability
- Highest rigidity

Technical features

- H7 quality pilot bore (see p2 below)
- Housing and functional parts hardened for high precision and long life
- Ready for air purge
- Ready for central grease lubrication
- Master jaws with both tongue & groove and fine serration 1.5 mm x 60°
- OD and ID clamping
- Lubrication with SMW-AUTOBLOK K67 grease
- Stroke control via proximity switches (optional)

Standard equipment

Self-centering vise without top jaws
All bolts and centering bushings included

Gripping force diagrams

TVH-N ☐100 ☐160 ■200

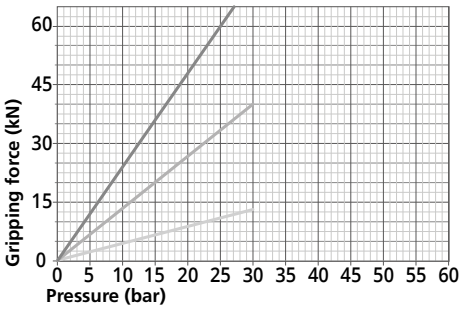

TVH-L ☐100 ☐160 ■200

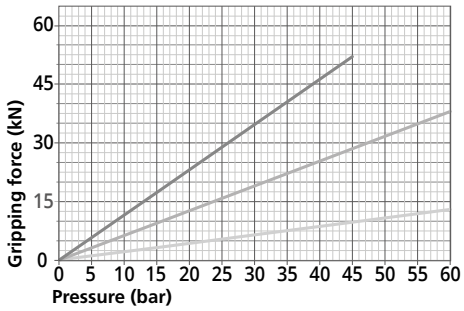

TVH-F ☐100 ☐160 ■200

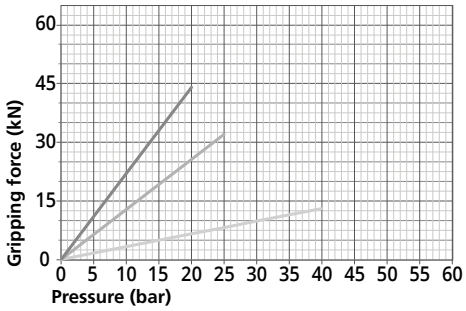

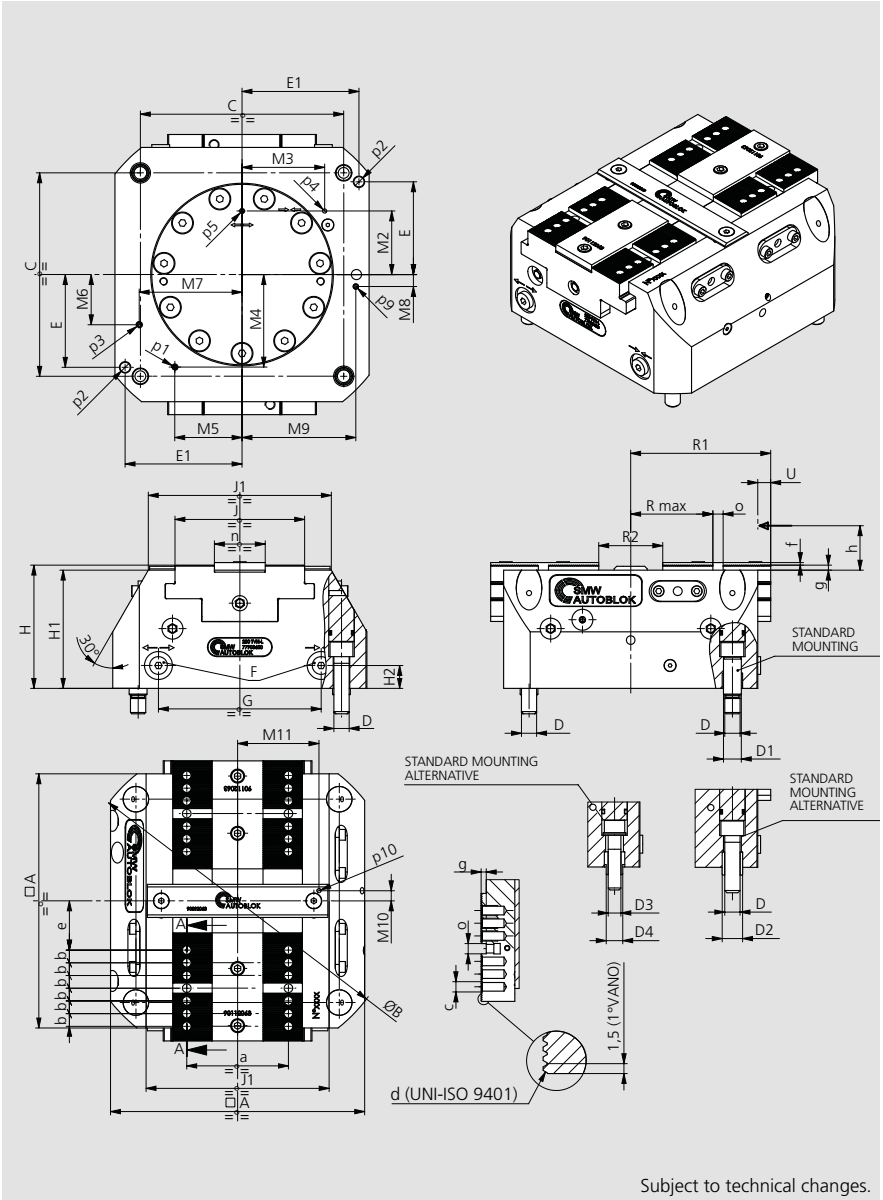

Subject to technical changes.

TVH-N/TVH-L/TVH-F

HYDRAULIC TWIN VISE

- TVH-N: Normal stroke
- TVH-L: Long stroke
- TVH-F: One fixed jaw

Type	Id. No.	Stroke type	Max. clamping force [kN]	Stroke / jaw [mm]	Max. operating pressure [bar]	Repeatability [mm]	Weight [kg]
100 TVH-N	77903510	NORMAL	13	2.6	30	0.01	4.5
100 TVH-L	77903610	LONG	13	6	60	0.01	4.5
100 TVH-F	77903710	FIXED JAW	13	6	40	0.01	4.5
160 TVH-N	77903516	NORMAL	40	3	30	0.01	14
160 TVH-L	77903616	LONG	38	8.4	60	0.01	14
160 TVH-F	77903716	FIXED JAW	32	8.4	25	0.01	14
200 TVH-N	77903520	NORMAL	60	4.2	25	0.02	25
200 TVH-L	77903620	LONG	52	10.2	45	0.02	25
200 TVH-F	77903720	FIXED JAW	44	10.2	20	0.02	25

TVH			100	160	200
	A	mm	100	160	200
	B(Ø)	mm	132	205	255
	C	mm	80	125	160
	D(Ø)	mm	M8x15	M10x18	M12x20
	D1 (Øf7)	mm	10x4	12x4	14x5
	D2 (Øjs7)	mm	11x4	13x6	16x6
	D3	mm	-	-	M10x18
	D4 (Øjs7)	mm	-	-	13x6
	E	mm	32	53	73
	E1	mm	45	73	92
	F	mm	G1/8"	G1/8"	G1/8"
	G	mm	55	98	128
	H	mm	75.5	89.7	97
	H1	mm	72	86	93
	H2	mm	15	18	18
	J	mm	47	75	102
	J1	mm	72	108	144
	M2	mm	32	40	50
	M3	mm	29.5	50	65
	M4	mm	34.2	59	72.8
	M5	mm	27.7	41	52.9
	M6	mm	14.2	30.7	39.5
	M7	mm	41.1	62.9	80.9
	M8	mm	8.3	4.9	9.4
	M9	mm	42.7	69.8	89.5
	M10	mm	5	5	8
	M11	mm	34	52	64
Lubrication	**p1**	mm	M4	M5	M5
	p2 ØH7	mm	6x14	8x14	8x14
Air purge	**p3**	mm	M4	M5	M5
Vise closed	**p4**	mm	M4	M4	M4
Vise open	**p5**	mm	M4	M4	M4
Air sensing connection	**p9**	mm	M4	M5	M5
Air sensing outlet	**p10**	mm	M4	M4	M4
Min. / max. (long stroke)	**R2**	mm	20 / 32	26 / 42.8	30 / 50.4
Min. / max. (long stroke)	**R1**	mm	50 / 56	82.5 / 90.9	100 / 110.2
Min. / max. (long stroke)	**Rmax**	mm	25.6 / 31.6	44.8 / 53.2	54.5 / 64.7
Min. / max. (normal stroke)	**R2**	mm	19.8 / 25	26 / 32	30.6 / 39
Min. / max. (normal stroke)	**R1**	mm	47.4 / 50	82.5 / 85.5	95.8 / 100
Min. / max. (normal stroke)	**Rmax**	mm	25.4 / 28	45 / 48	54.5 / 58.7
Min. / max. (fixed jaw)	**R2**	mm	20 / 26	26 / 34.4	30 / 40.2
Min. / max. (fixed jaw)	**R1**	mm	50 / 56	82.5 / 90.9	100 / 110.2
Min. / max. (fixed jaw)	**Rmax**	mm	25.6 / 31.6	44.8 / 53.2	54.5 / 64.7
Long stroke	**U**	mm	6	8.4	10.2
Normal stroke	**U**	mm	2.6	3	4.2
Fixed jaw stroke	**U**	mm	6	8.4	10.2
	a	mm	35	60	80
	b	mm	7	10	10
	c	mm	M6x10	M8x12	M8x12
Serration	**d**	mm	1.5 x 60°	1.5 x 60°	1.5 x 60°
Min. / max. (normal stroke)	**e**	mm	14.4 / 17	19 / 22	28.5 / 32.7
Min. / max. (long stroke)	**e**	mm	14.6 / 20.6	18.8 / 27.2	28.5 / 38.7
Min. / max. (fixed jaw)	**e**	mm	14.6 / 20.6	18.8 / 27.2	28.5 / 38.7
	f	mm	1.8	1.8	2
	g	mm	2.7	3.2	4
	h	mm	16	25	35
	o (H7)	mm	6	8	8
	n (g6)	mm	20	32	40

TVP / TVH

Standard Twin Vises

■ Mounting instructions

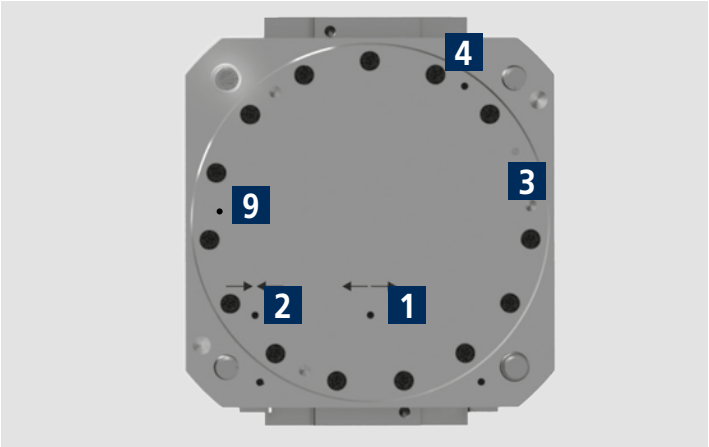

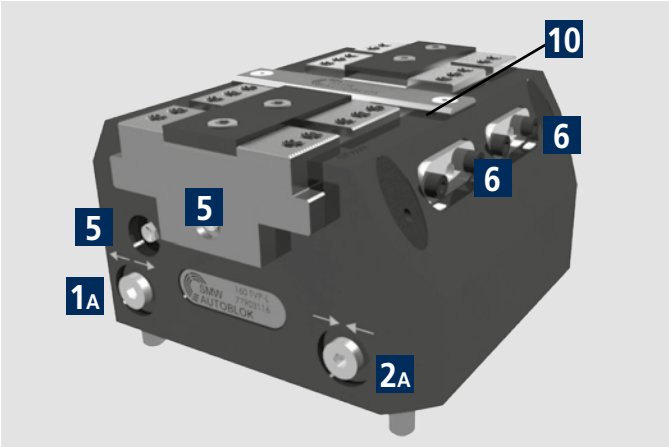

SOLUTION 1 STANDARD

± 0.03 mm to clamping center

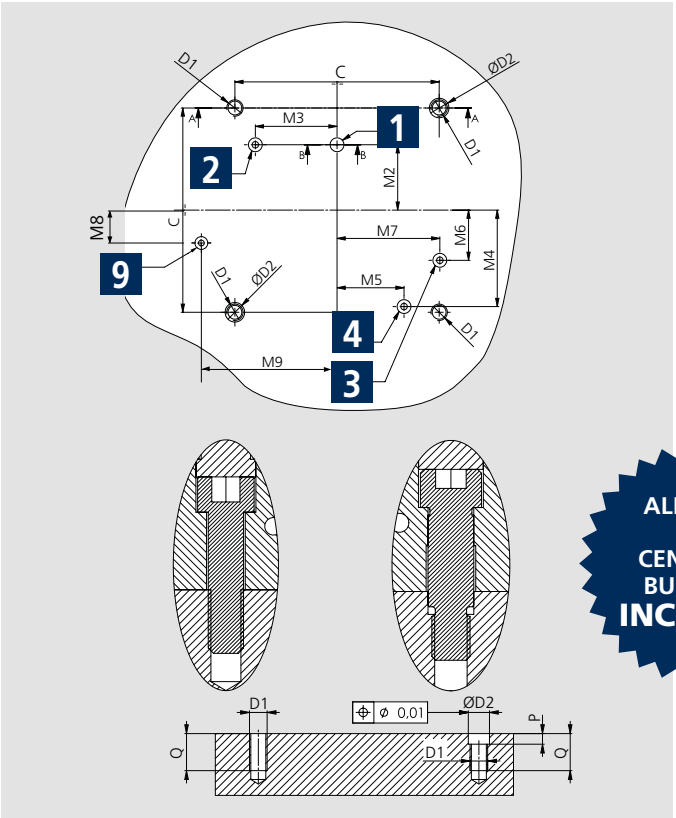

SOLUTION 2 STANDARD

± 0.025 mm to clamping center

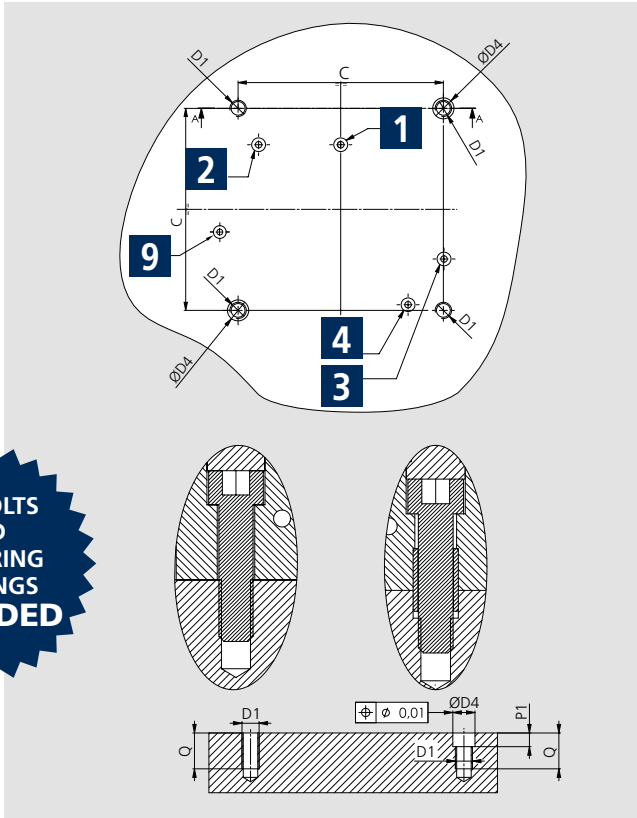

ALL BOLTS AND CENTERING BUSHINGS INCLUDED

FEEDING SEATS: OBLIGATED EXECUTION

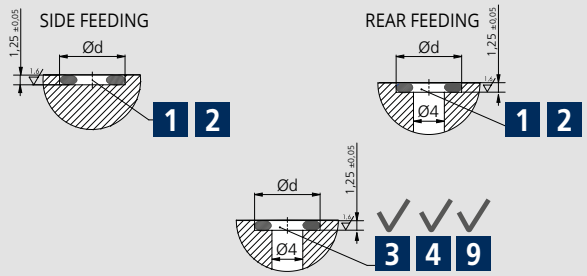

1	Open-Rear feeding	2	Closed-Rear feeding	3	Air purge
1A	Open-Side feeding	2A	Closed-Side feeding	4	Central lubrication
5	Lubrication fitting	6	Proximity switches seats	9	Air sensing connection
10	Air sensing outlet				

TV	C	D1	D2H7	D4H7	M	M1	M2	M3	M4	M5	M6	M7	M8	M9	P	P1	Q	V	Z	Ød	OR
100	80	M8	10	11	45	29	32	29.5	34.2	27.7	14.2	41.1	8.3	42.7	6	6	18	37.3	96.5	8	OR2018
160	125	M10	12	13	69	48	40	50	59	41	30.7	62.9	4.9	69.8	6	7	21	50	155	8	OR2018
200	160	M12	14	16	88	62	50	65	72.8	52.9	39.5	80.9	9.4	89.5	7	7	24	62	195	8.8	OR2021
250	200	M12	14	16	113	77	64	75	89.8	65.2	48.6	99.8	11.6	110.4	7	7	24	80	239	8.8	OR2021
315	250	M15	18	21	-	-	80	90	115.7	84	62.7	128.5	12.4	141.5	8	7	27	-	-	8.8	OR2021

NOTES

Safety valve SAB-1 (OPTIONAL)

Industry 4.0 Product

1 FEATURES

- Safety valve SAB-1 to maintain air pressure during pallet transportation/storage and machining without feed
- Easy and smart opening of the vise by air gun
- TURBO function to increase the clamping forces

ONLY FOR STV-2 STV-3

PNEUMATIC GUN

WITH STEEL NOZZLE

2 OPERATION

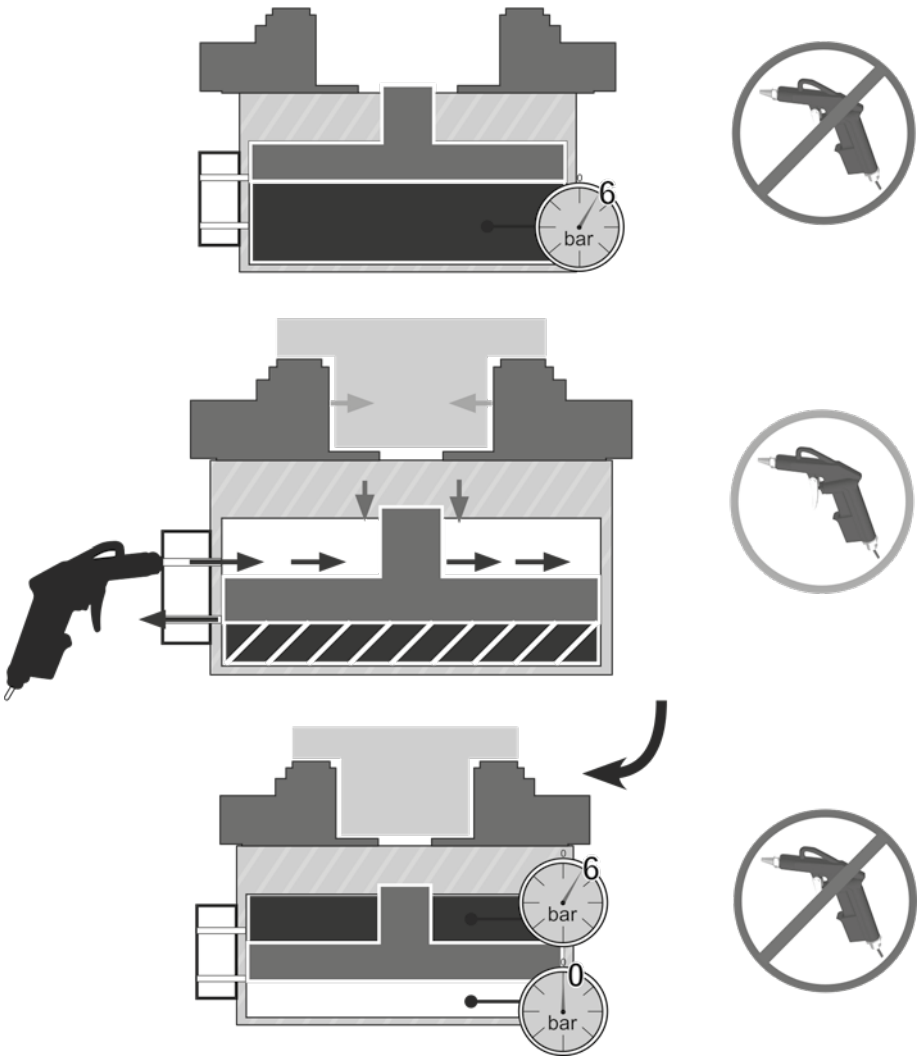

3 MOUNTING

IN CASE OF SEPARATE PURCHASE

▶ **3.1** Before install the **SAB-1** please remember to remove the two set screws, because from factory default setting, the air connection is ready to be used from the bottom side.

▶ **3.2** After that you need close the two holes located on the bottom side using the same set screws or an o-ring.

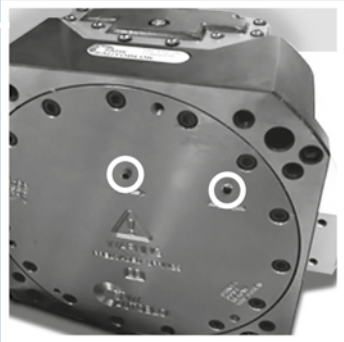

If the SAB-1 is purchased together with the Twin Vises, the assembly and adjustment are done by SMW-Autoblok personnel at our factories.

SOFT TOP JAWS

for Twin Vises

- Soft blank top jaws
- Tongue & Groove

Material: C40 UNI7847

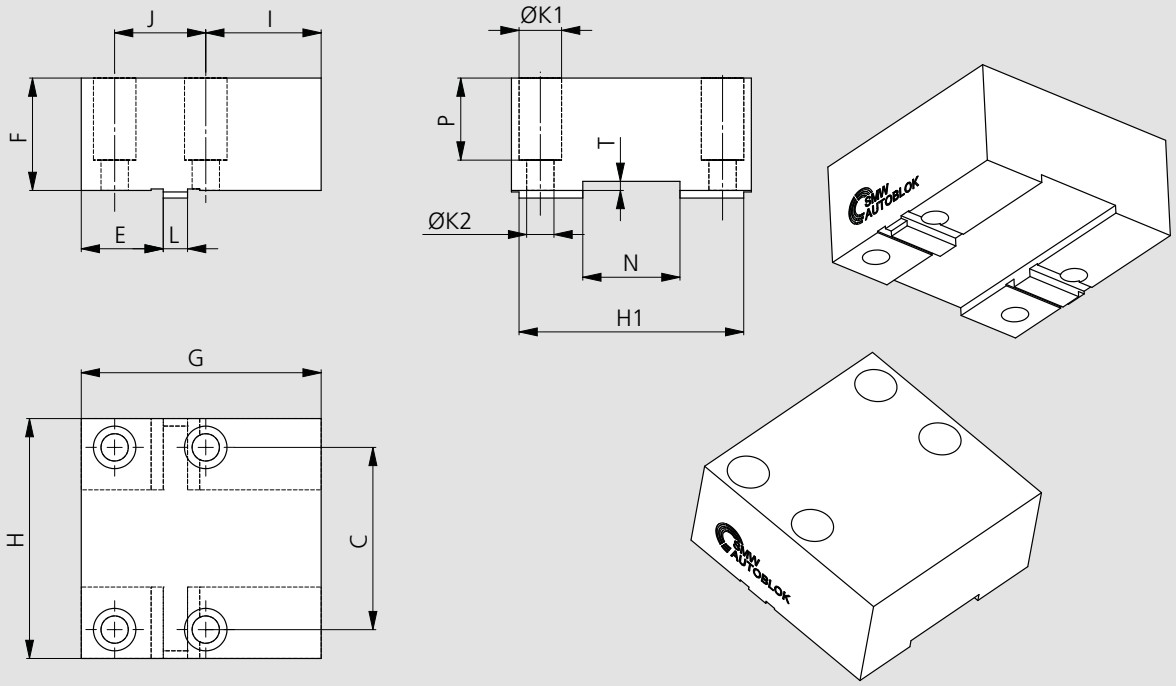

Subject to technical changes.

SOFT BLANK TOP JAWS, TONGUE & GROOVE

Type	Id. No.*	C	E	F	G	H	H1	I	J	K1	K2	L	N	P	T	Clamping range [mm]	Weight [kg]
100 TV / PT	90711063	35	18	27.5	49	54.5	45	21	21	11	7	6h7	20h8	20	3	0 - 70	0.5
125 STV-2 / PT	90711283	35	33	27,5	64	54.5	45	21	35	11	7	6h7	20h8	20	3	0 - 100	0.65
100 TV / PT	90721063	35	18	47.5	49	54.5	45	21	21	11	7	6h7	20h8	40	3	0 - 70	0.85
125 STV-2 / PT	90721283	35	33	47,5	64	54.5	45	21	35	11	7	6h7	20h8	40	3	0 - 100	1.15
160 TV / PT	90711663	60	27	37	79	79	74	38	30	14	9	8h7	32h8	27	3	0 - 120	1.6
180 STV-2 / PT	90711883	60	41	37	93	79	74	38	40	14	9	8h7	32h8	27	3	0 - 140	1.9
160 TV / PT	90721663	60	27	76.5	79	79	74	38	30	14	9	8h7	32h8	66.5	3	0 - 120	3.3
180 STV-2 / PT	90721883	60	41	76.5	93	79	74	38	40	14	9	8h7	32h8	66.5	3	0 - 140	4
200 TV / PT	90712063	80	37	47	98.5	109	92	47.5	40	14	9	8h7	40h8	37	3.5	0 - 150	3.6
200 TV / PT	90722063	80	37	86.5	98.5	109	92	47.5	40	14	9	8h7	40h8	76.5	3.5	0 - 150	6.8
225 STV-2	90712283	80	52	47	113.5	109	92	47.5	50	14	9	8h7	40h8	37	3.5	0 - 170	4.2
225 STV-2	90722283	80	52	86.5	113.5	109	92	47.5	50	14	9	8h7	40h8	76.5	3.5	0 - 170	7.9
250 TV	90712563	90	59	47	120	124	/	44	48	18	11	10h7	50h8	31	3.5	0 - 180	5
250 TV	90722563	90	59	97.5	120	124	/	44	48	18	11	10h7	50h8	81.5	3.5	0 - 180	10.5
315 TV	90713163	120	54	57	150	160	/	75	60	20	13.5	12h7	60h8	42	3.5	0 - 240	10
315 TV	90723163	120	54	102.5	150	160	/	75	60	20	13.5	12h7	60h8	87.5	3.5	0 - 240	18

*The Id. No. refers to one single piece.

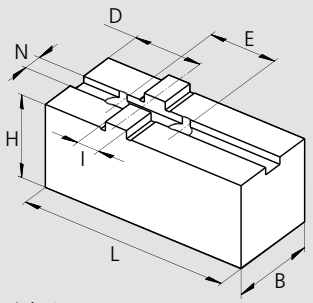

Material: C40 UNI7847

TONGUE & GROOVE SOFT BLANK TOP JAWS "C" FOR TWIN VISE STV-3

Type	Id. No.*	B	H	L	N	D	E	I	Clamping range [mm]	Weight [kg]
180 STV-3	12041660	30	32	80	7.94	30	38.1	12.68	0 - 140	0.58
225 STV-3	12042060	35	37	100	7.94	35	44.4	12.68	0 - 170	0.92

*The Id. No. refers to one single piece.

SOFT TOP JAWS

for Twin Vises

- Soft blank top jaws
- Fine serration 1.5mmx60°

Material: C40 UNI7847

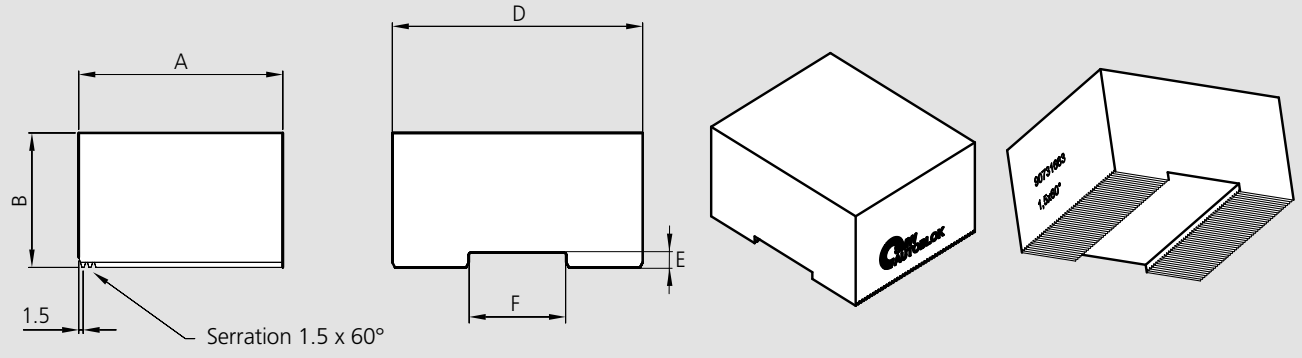

Subject to technical changes.

SOFT BLANK TOP JAWS, FINE SERRATION 1.5 mm x 60°

Type	Id. No.*	A	B	D	E	F	Weight [kg]
100-125 TV	90731063	42	29.5	54.5	3.5	20H8	0.5
100-125 TV	90741063	47	49.5	54.5	3.5	20H8	0.95
160-180 TV	90731663	66	39.5	79	3.5	32H8	1.5
160-180 TV	90741663	76	79	79	3.5	32H8	3.6
200-225 TV	90732063	87	49.5	109	4	40H8	3.5
200-225 TV	90742063	87	89	109	4	40H8	6.5
250 TV	90732563	108	49.5	124	4	50H8	5
250 TV	90742563	108	99	124	4	50H8	10.2
315 TV	90733163	160	49.5	160	4	60H8	9.6
315 TV	90743163	160	105	160	4	60H8	20.7

*The Id. No. refers to one single piece.

Material: C40 UNI7847

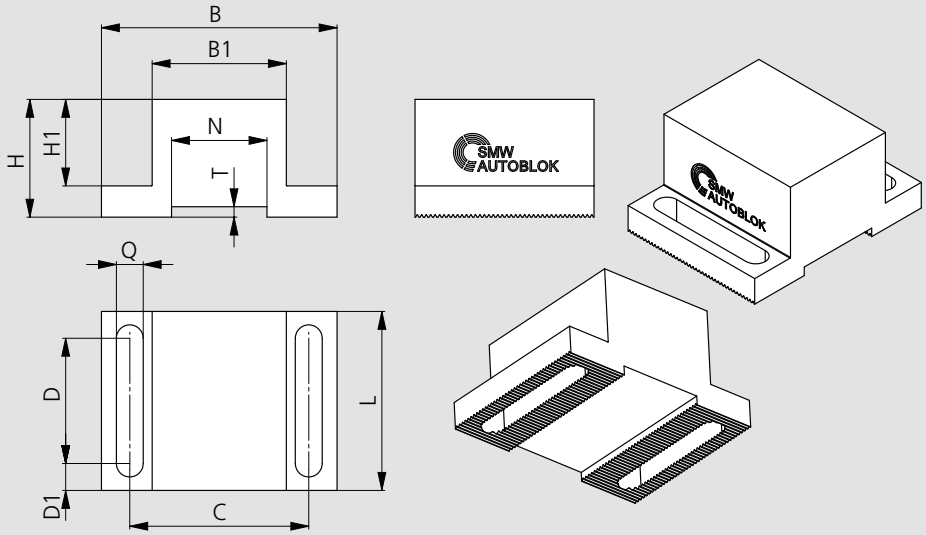

Subject to technical changes.

SOFT BLANK TOP JAWS, FINE SERRATION 1.5 mm x 60°

Type	Id. No.*	B	B1	C	D	D1	H	H1	L	N	Q	T	Weight [kg]
100-125 TV	90751063	54.5	24	35	30	6	29.5	21.5	42	20H8	6.6	3.5	0.25
160-180 TV	90751663	79	45	60	42	9	39.5	29	60	32H8	9	3.5	0.9
200-225 TV	90752063	109	65	80	62	9	49.5	39	80	40H8	9	4	2
250 TV	90752563	124	72	90	62	14	49.5	33	90	50H8	11	4	2.7
315 TV	90753163	160	90	120	82	12	49.5	31.5	106	60H8	13.5	4	4.2

*The Id. No. refers to one single piece.

SOFT TOP JAWS

for Twin Vises PT-RR

■ Soft top jaws QUICK CHANGE

Material: C40 UNI7847

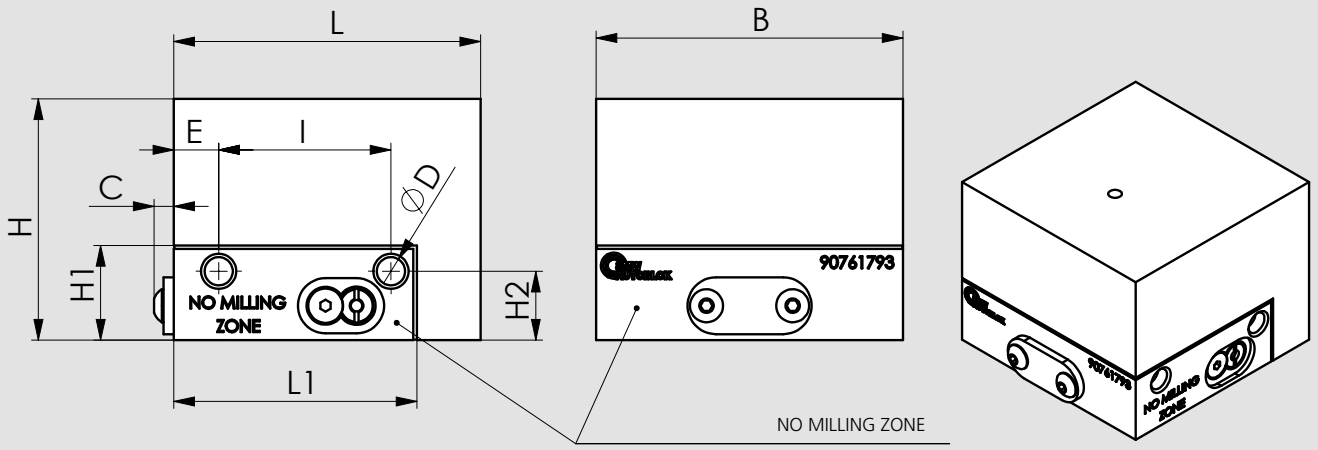

Subject to technical changes

Type	Id. No.*	B	C	øD	E	H	H1	H2	I	L	L1	Weight [kg]
160 PT-RR	90711793	89	6	8,2	13	70	27	20	50	89	70	4
160 PT-RR	90721793	89	6	8,2	13	110	27	20	50	89	70	6,5
200 PT-RR	90712193	109	6	8,2	29	80	27	20	50	109	89	7
200 PT-RR	90722193	109	6	8,2	29	120	27	20	50	109	89	11
250 PT-RR	90712643	139	0	8,2	40	90	27	20	50	130	100	12
250 PT-RR	90722643	139	0	8,2	40	140	27	20	50	130	100	19

*The Id.no. refers to one single piece

O.D. CLAMPING

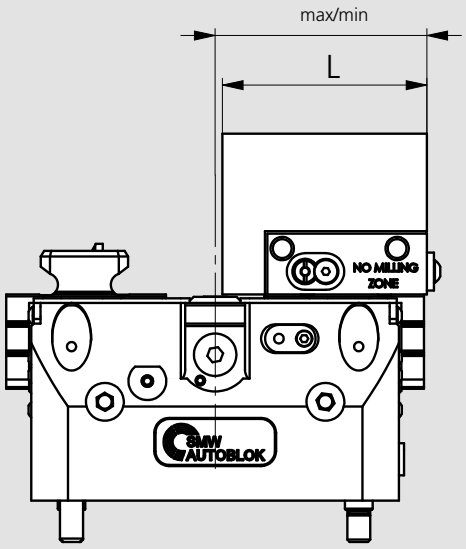

I.D. CLAMPING

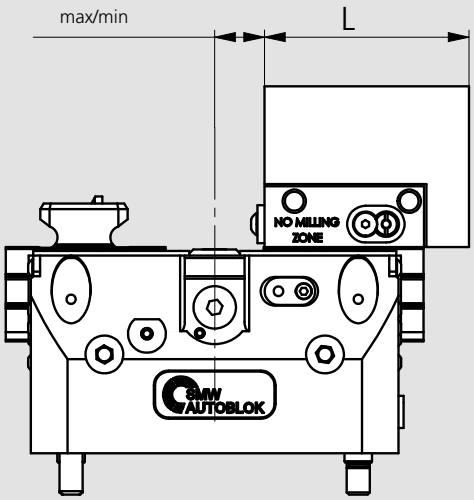

Subject to technical changes

Type	Id. No.*	O.D. Clamping		I.D. Clamping	
		max/min	Clamping range	max/min	Clamping range
160 PT-RR	90711793	92/84	0-130	21,5/13,5	60/215
160 PT-RR	90721793	92/84	0-120	21,5/13,5	70/215
200 PT-RR	90712193	113/103	0-160	24,5/14,5	65/260
200 PT-RR	90722193	113/103	0-150	24,5/14,5	75/260
250 PT-RR	90712643	135/120	0-190	34/19	90/320
250 PT-RR	90722643	135/120	0-180	34/19	100/320

*The Id.no. refers to one single piece

UNLOCK JAW STEP

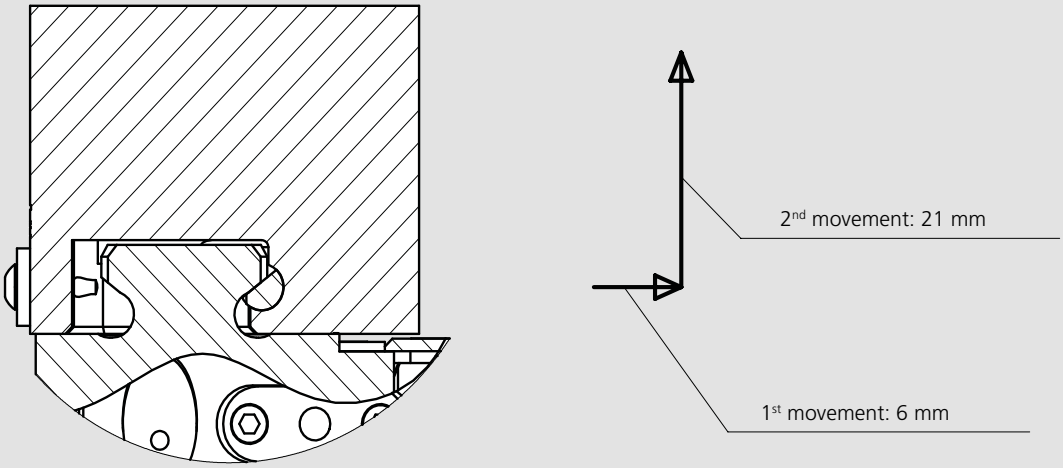

O.D. CLAMPING

I.D. CLAMPING

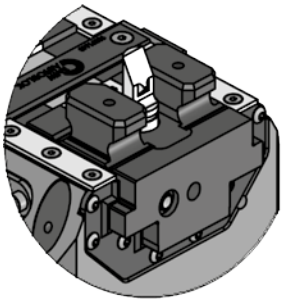

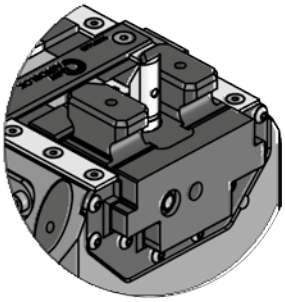

FROM OD CLAMPING TO ID CLAMPING INSTRUCTIONS AND VICE VERSA

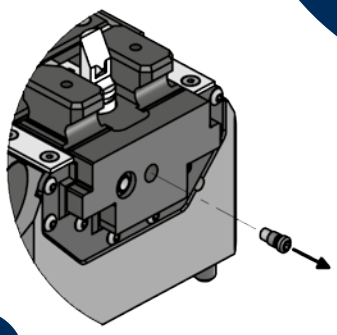

1

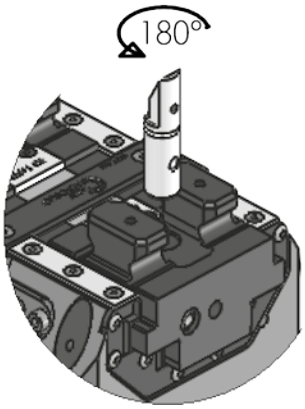

2

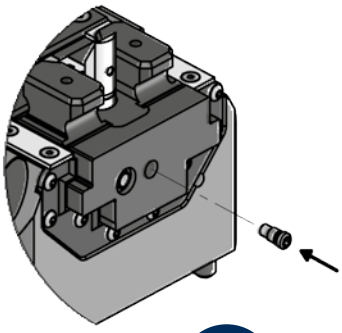

3

WIDE HARD TOP JAWS

TOP JAWS SinterGrip

- Hard top jaws with SinterGrip inserts
- Metric serrated 1.5 mm x 60°

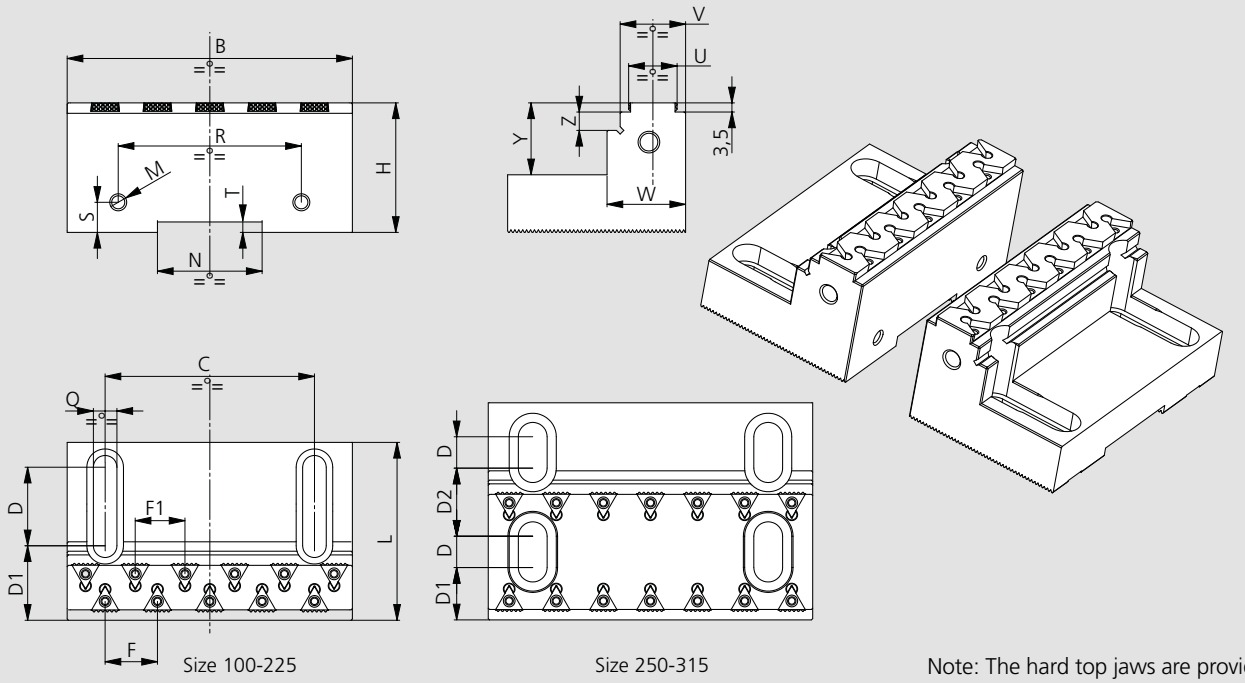

Size 100-225

Size 250-315

Note: The hard top jaws are provided with Id. No. 58450129 inserts mounted only on one side.

Subject to technical changes.

WIDE HARD TOP JAWS DIMENSIONS

Type	Id. No. set of 2 top jaws	B [mm]	C [mm]	D [mm]	D1 [mm]	D2 [mm]	F [mm]	F1 [mm]	H [mm]	L [mm]	M [mm]	N [mm]	Q [mm]	R [mm]	S [mm]	T [mm]	U [mm]	V [mm]	W [mm]	Y [mm]	Z [mm]	No. inserts provided	*No. seat inserts	Weight [kg]
100-125 TV-STV-PT	58454115	72	35	21	9	/	12/23	12/23	26	39	M5	20H8	6,6	60	10	3,5	21.5	28	33	13	5	8	16	0.7
160-180 TV-STV-PT	58454125	104	60	30	14	/	15/28	15/28	34.5	57	M6	32H8	9	86	11.5	3,5	21.5	28	33	15.5	5	10	20	2
200-225 TV-STV-PT	58454135	109	80	30	29	/	20	19	34.5	68	M6	40H8	9	70	11.5	4	18.5	25	30	15.5	7	12	22	2.3
250 TV-PT	58454145	124	90	12	20	26	18	18	39.5	83	M8	50H8	11	80	15	4	45.5	52	57	17.5	7	14	28	4.3
315 TV	58454155	160	120	15	23.5	35	20	20	44.5	105	M8	60H8	13	80	15	4	55.5	62	67	17.5	7	16	32	8.3

*The number of seats inserts indicated refers to set of 2 top jaws

WIDE HARD TOP JAWS CLAMPING RANGES for long and normal stroke Twin Vise models

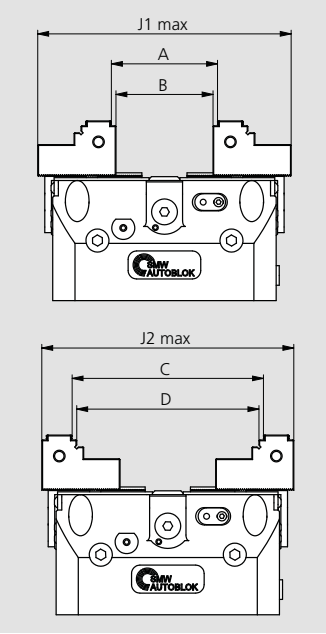

Id. No. set of 2 top jaws	Type	A [mm]	B [mm]	J1 max. [mm]	C [mm]	D [mm]	J2 max. [mm]	Gripping force max. [kN]**
58454115	100 TV-N	10 - 32	4 - 25	106	32 - 70	25 - 63	122	13
	100 TV-L							
	100 PT-N	10 - 46	4 - 40	120	32 - 83	25 - 76	135	13
	100 PT-L							
	125 PT-N	10 - 60	4 - 53	134	32 - 98	25 - 91	150	22
	125 PT-L							
	125 STV-N	10 - 60	4 - 53	134	32 - 98	25 - 91	150	26
	125 STV-L							
58454125	160 TV-N	10 - 70	4 - 63	180	66 - 138	59 - 131	190	40
	160 TV-L							
	160 PT-N	10 - 70	4 - 63	180	66 - 138	59 - 131	190	40
	160 PT-L							
	180 STV-N	10 - 85	4 - 78	195	66 - 160	59 - 153	213	54
	180 STV-L							
58454135	200 TV-N	10 - 93 (***)	4 - 86	225	96 - 175	89 - 168	220	60
	200 TV-L	10 - 96	4 - 89	228				
	200 PT-N	10 - 93 (***)	4 - 86	225	96 - 175	89 - 168	220	60
	200 PT-L	10 - 96	4 - 89	228				
	225 STV-N	10-96	4 - 89	228	96 - 202	89 - 196	250	66
	225 STV-L							
58454145	250 TV-N	10 - 88	4 - 82	250	88 - 192	82 - 186	292	60
	250 TV-L	10 - 106	4 - 100	270	88 - 202	82 - 196	302	
	250 PT-N	10 - 88	4 - 82	250	88 - 192	82 - 186	292	60
	250 PT-L	10 - 106	4 - 100	270	88 - 202	82 - 196	302	
58454155	315 TV-N	18 - 108	12 - 102	315	104 - 246	98 - 240	366	100
	315 TV-L	18 - 132	12 - 126	338	120 - 255	114 - 248	375	

** the maximum gripping force values are indicative since they depend on the number of inserts used.

***with 200 TV-PN and 200 PT-N models it is not possible to clamp workpieces with dimensions between from 93 to 96 mm.

WIDE HARD TOP JAWS

- Hard top jaws with SinterGrip inserts
- Metric serrated 1.5 mm x 60°

TOP JAWS SinterGrip

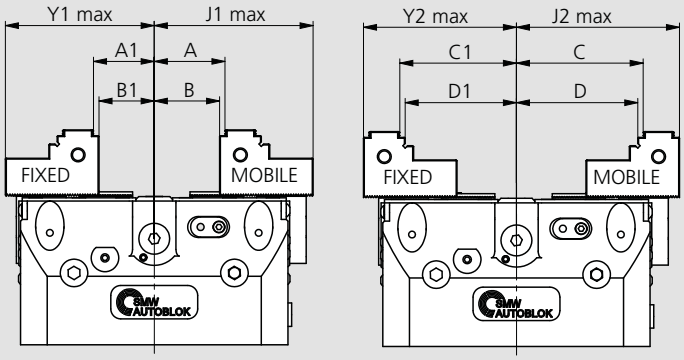

Note: the A1 - B1 - C1 -D1 dimensions for fixed jaws clamping range have tolerance ± 0.75 mm due to the serration pitch 1.5 mm.

Subject to technical changes.

WIDE HARD TOP JAWS CLAMPING RANGES for one fixed jaw Twin Vise models

Id. No. set of 2 top jaws	Type	A [mm]	B [mm]	A1 [mm]	B1 [mm]	J1 max. [mm]	Y1 max. [mm]	C [mm]	D [mm]	C1 [mm]	D1 [mm]	J2 max. [mm]	Y2 max. [mm]	Gripping force max. [kN]**
58454115	100 TV-F	5 - 16	2 - 13	5 - 16	2 - 13	53	52	16 - 35	13 - 32	16 - 35	13 - 32	61	60	13
	100 PT-F	5 - 23	2 - 20	5 - 23	2 - 20	60	59	16 - 41	13 - 38	16 - 41	13 - 38	67	66	13
	125 PT-F	5 - 30	2 - 27	5 - 30	2 - 27	67	66	16 - 49	13 - 46	16 - 49	13 - 46	75	74	15
58454125	160 TV-F	5 - 35	2 - 32	5 - 35	2 - 32	90	89	33 - 69	30 - 66	33 - 69	30 - 66	95	93	32
	160 PT-F	5 - 35	2 - 32	5 - 35	2 - 32	90	89	33 - 69	30 - 66	33 - 69	30 - 66	95	93	32
58454135	200 TV-F	5 - 48	2 - 45	5 - 48	2 - 45	114	113	48 - 87	45 - 84	48 - 87	45 - 84	110	109	44
	200 PT-F	5 - 48	2 - 45	5 - 48	2 - 45	114	113	48 - 87	45 - 84	48 - 87	45 - 84	110	109	44
58454145	250 TV-F	5 - 53	2 - 50	5 - 53	2 - 50	135	134	44 - 101	41 - 98	44 - 88	41 - 85	151	137	40
58454155	315 TV-F	9 - 66	6 - 63	9 - 66	6 - 63	169	168	60 - 127	57 - 124	60 - 112	57 - 109	187	171	65

** the maximum gripping force values are indicative since they depend on the number of inserts used.

NARROW HARD TOP JAWS

TOP JAWS SinterGrip

- Hard top jaws with SinterGrip inserts
- Metric serrated 1.5 mm x 60°

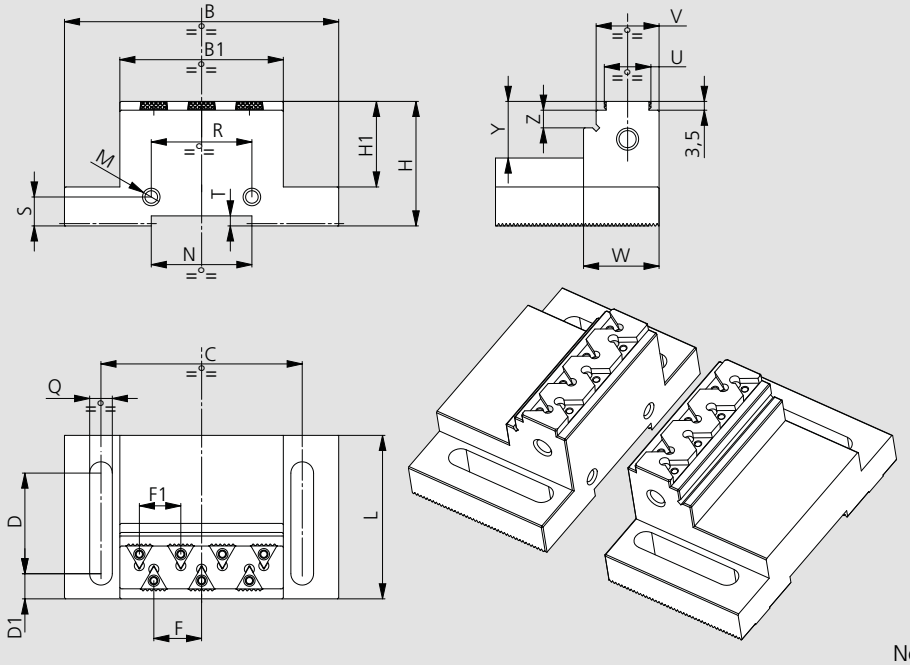

Subject to technical changes.

Note: the hard top jaws are provided with Id. No. 58450129 inserts mounted only on one side.

NARROW HARD TOP JAWS DIMENSIONS

Type	Id. No. set of 2 top jaws	B [mm]	B1 [mm]	C [mm]	D [mm]	D1 [mm]	F [mm]	F1 [mm]	H [mm]	H1 [mm]	L [mm]	M [mm]	N [mm]	Q [mm]	R [mm]	S [mm]	T [mm]	U [mm]	V [mm]	W [mm]	Y [mm]	Z [mm]	No. inserts provided	*No. seat inserts	Weight [Kg]
100-125 TV-STV-PT	58454215	54.5	24	35	27	6	12	12	29.5	20	39	-	20H8	6.6	-	-	3.5	21.5	28	33	17.5	7	4	8	0.4 kg
160-180 TV-STV-PT	58454225	79	45	60	38	9	20	15.5	39.5	26	56	M6	32H8	9	26	11.5	3.5	18.5	25	30	17.5	7	6	10	1.3 kg
200-225 TV-STV-PT	58454235	109	65	80	40	10	19	16.5	44.5	27.5	65	M6	40H8	9	40	11.5	4	18.5	25	30	18.5	7	8	14	2.5 kg
250 TV-PT	58454245	124	72	90	48	14	14	14	49.5	34	76	M6	50H8	11	40	11.5	4	21.5	28	33	20.5	7	10	20	3.5 kg
315 TV	58454255	160	90	120	60	15	15	15	49.5	32	90	M6	60H8	13	60	15	4	27.5	34	39	19.5	7	12	24	5.5 kg

*The number of seats inserts indicated refers to set of 2 top jaws

NARROW HARD TOP JAWS CLAMPING RANGES for long and normal stroke Twin Vise models

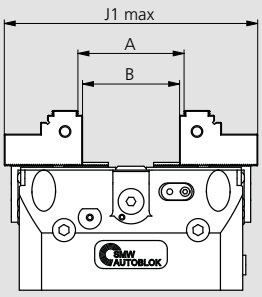

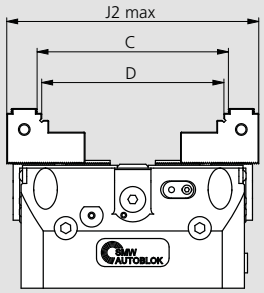

**the maximum gripping force values are indicative since they depend on the number of inserts used.

Id. No. set of 2 top jaws	Type	A [mm]	B [mm]	J1 max. [mm]	C [mm]	D [mm]	J2 max. [mm]	Gripping force max. [kN]**
58454215	100 TV-N	10-32	4-25	106	32-75	25-68	127	13
	100 TV-L							
	100 PT-N	10-46	4-40	120	32-85	25-78	137	13
	100 PT-L							
	125 PT-N	10-60	4-53	134	32-100	25-93	152	22
	125 PT-L							
	125 STV-N	10-60	4-53	134	32-100	25-93	152	26
	125 STV-L							
58454225	160 TV-N	10-74	4-67	182	74-140	67-133	188	40
	160 TV-L							
	160 PT-N	10-74	4-67	182	74-140	67-133	188	40
	160 PT-L							
	180 STV-N	10-88	4-82	196	74-160	67-153	208	54
	180 STV-L	10-98	4-92	206				
58454235	200 TV-N	10-93	4-87	220	93-175	87-168	220	60
	200 TV-L							
	200 PT-N	10-93	4-87	220	93-175	87-168	220	60
	200 PT-L							
	225 STV-N	10-110	4-104	237	93-202	87-196	250	66
	225 STV-L	10-120	4-114	247				
58454245	250 TV-N	22-108	16-102	255	108-218	102-212	272	60
	250 TV-L	22-122	16-116	270				
	250 PT-N	22-108	16-102	255	108-218	102-212	272	60
	250 PT-L	22-122	16-116	270				
58454255	315 TV-N	30-138	23-132	315	138-275	132-268	340	100
	315 TV-L	30-162	23-156	338	160-275	154-268	340	

NARROW HARD TOP JAWS

TOP JAWS SinterGrip

- Hard top jaws with SinterGrip inserts
- Metric serrated 1.5 mm x 60°

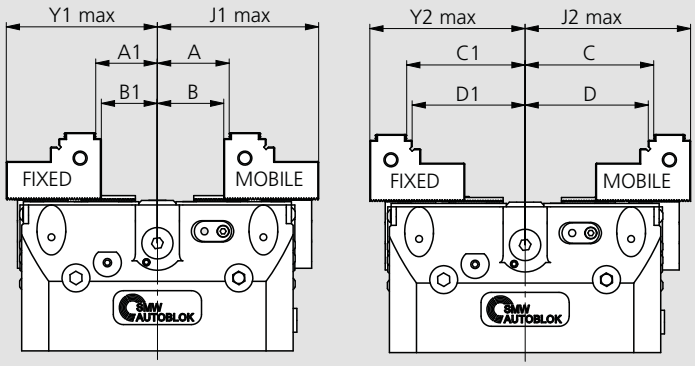

Note: the A1 - B1 - C1 -D1 dimensions for fixed jaws clamping range have tolerance ± 0.75 mm due to the serration pitch 1.5 mm

Subject to technical changes.

NARROW HARD TOP JAWS CLAMPING RANGES for fixed jaw Twin Vise models

Id. No. set of 2 top jaws	Type	A [mm]	B [mm]	A1 [mm]	B1 [mm]	J1 max. [mm]	Y1 max. [mm]	C [mm]	D [mm]	C1 [mm]	D1 [mm]	J2 max. [mm]	Y2 max. [mm]	Gripping force max. [kN]**
58454215	100 TV-F	5 - 16	2 - 13	5 - 16	2 - 13	53	52	16 - 38	13 - 34	16 - 38	13 - 34	64	63	13
	100 PT-F	5 - 23	2 - 20	5 - 23	2 - 20	60	59	16 - 43	13 - 40	16 - 43	13 - 40	69	68	13
	125 PT-F	5 - 30	2 - 27	5 - 30	2 - 27	67	66	16 - 50	13 - 47	16 - 50	13 - 47	76	75	15
58454225	160 TV-F	5 - 37	2 - 34	5 - 37	2 - 34	91	90	37 - 70	34 - 67	37 - 70	34 - 67	94	92	32
	160 PT-F	5 - 37	2 - 34	5 - 37	2 - 34	91	90	37 - 70	34 - 67	37 - 70	34 - 67	94	92	32
58454235	200 TV-F	5 - 47	2 - 44	5 - 47	2 - 44	110	109	47 - 87	44 - 84	47 - 87	44 - 84	110	109	44
	200 PT-F	5 - 47	2 - 44	5 - 47	2 - 44	110	109	47 - 87	44 - 84	47 - 87	44 - 84	110	109	44
58454245	250 TV-F	11 - 61	8 - 58	11 - 61	8 - 58	135	134	54 - 109	51 - 106	54 - 109	51 - 106	136	134	40
58454255	315 TV-F	15 - 81	12 - 78	15 - 81	12 - 78	169	168	80 - 137	77 - 134	80 - 137	77 - 134	170	168	65

** the maximum gripping force values are indicative since they depend on the number of inserts used.

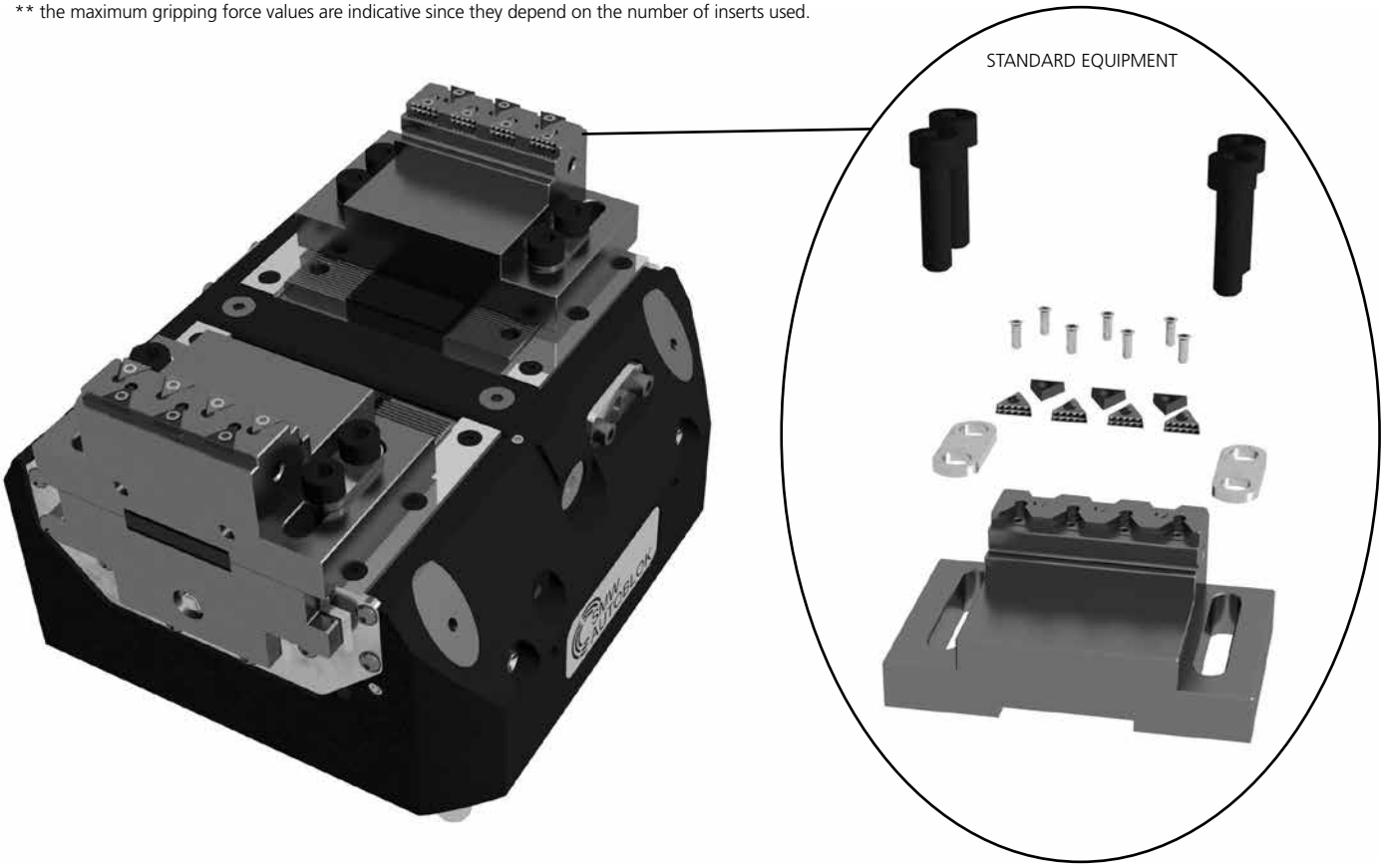

Stroke control proximities

(OPTIONAL)

■ Pneumatic jaw stroke control valve

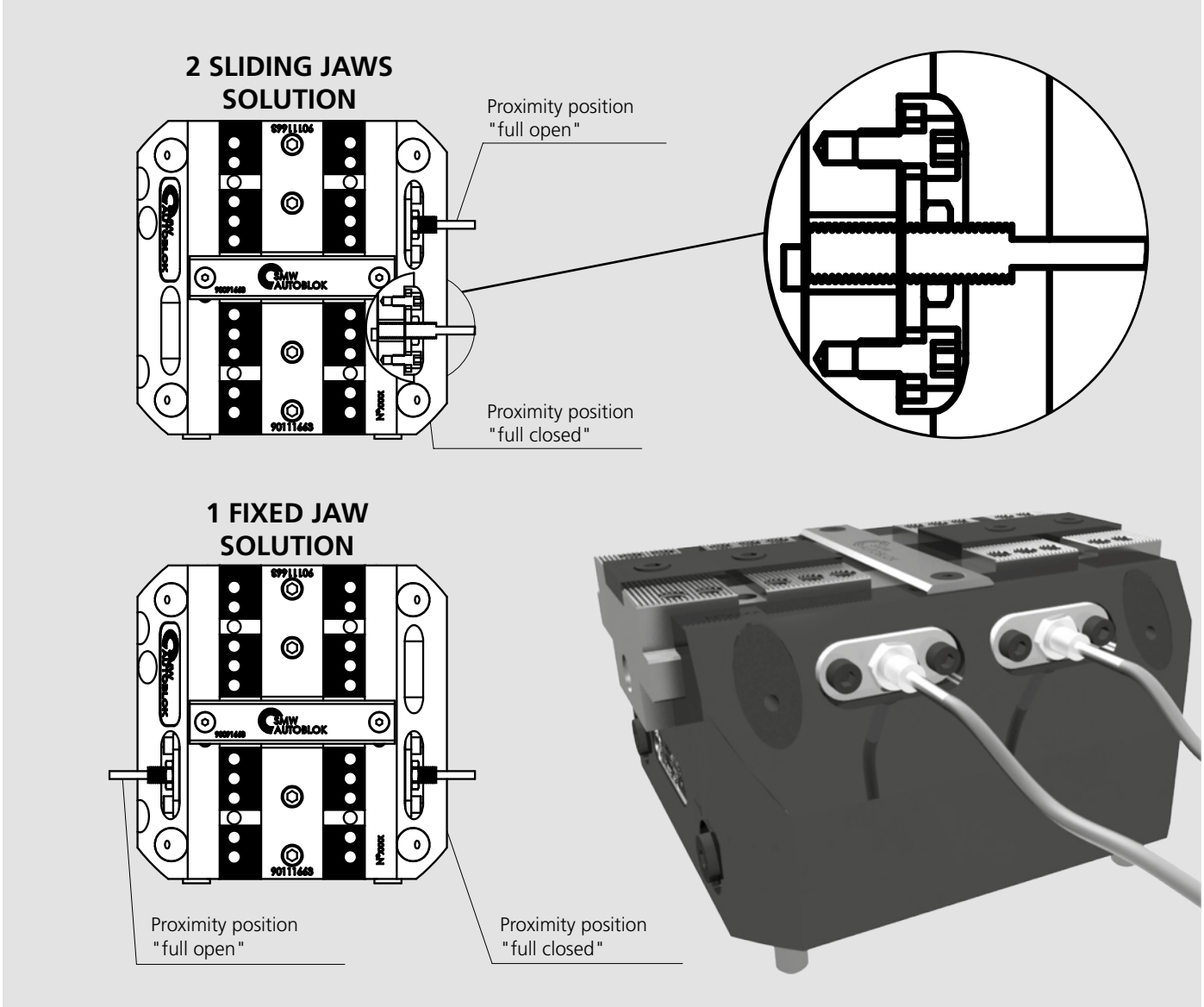

Twin Vise Type	Thread	Balluff sensor*	Omron sensor (alternative)	Telemecanique sensor (alternative)	S	L
100 TV	M5x0.5	BES516-3005-G-E4-C-PU02	E2EX1-B1	XS1N05PA310	0.5	20
160-200-250 TV	M8x1	BES516-324-G-E4-C-PU02	E2AS08KS02-WP-B12M	XS508B1PAL2	1	30
315 TV	M8x1	BESE08EF-PSC20B-BP02	E2AS08LS02-WP-BI2M	XS508BLPAL2	1	40
125 STV-2	M5x0.5	BES516-3005-G-E4-C-PU02	E2EX1-B1	XS1N05PA310	0.5	20
180-225 STV-2	M8x1	BES516-324-G-E4-C-PU02	E2AS08KS02-WP-B12M	XS508B1PAL2	1	30
100-125 PT	M5x0.5	BES516-3005-G-E4-C-PU02	E2EX1-B1	XS1N05PA310	0.5	20
160-200-250 PT	M8x1	BES516-324-G-E4-C-PU02	E2AS08KS02-WP-B12M	XS508B1PAL2	1	30

* Recommended by SMW-AUTOBLOK

Pneumatic valve

■ Pneumatic jaw stroke control valve

(OPTIONAL)

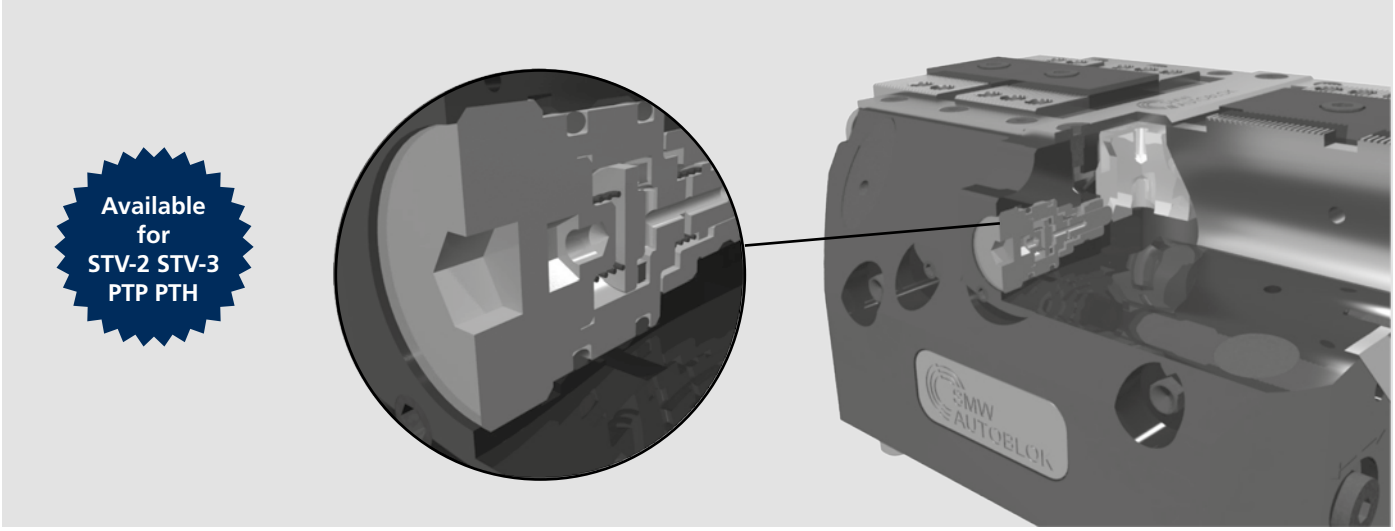

Twin Vise type	Id. No.
125 STV-2	90902283
180 STV-2	90902283
225 STV-2	90902283
180 STV-3	97901801
225 STV-3	97902204
100 PTP PTH	90901163
125 PTP PTH	90901763
160 PTP PTH	90901763
200 PTP PTH	90901763
250 PTH	90901763

The pneumatic open / close stroke control valve signals the locking jaws end-of-stroke positions, both in fully opened and fully closed positions.
The valve needs a pneumatic line with **filtered and lubricated air and a pressure of 0,5-1 bar**.
• when the locking jaws are in one of the end stroke position (fully opened or closed), the valve is open causing a pressure drop in the pneumatic line or the beginning of an air flow.
• when the locking jaws are in the working stroke, the valve is closed and there is no pressure drop in the pneumatic line and there no air flow.

ONLY THE PTP AND PTH VISES
The vises can be supplied (when requested) with the **opposite functioning** of the valve: that is closed valve at the end of the strokes and open in the working / middle stroke.

Safety valve SAB-1

(OPTIONAL)

The Safety valve SAB-1 maintains air pressure in the cylinder pallet transportation / storage or machining without feed.

Pneumatic gun

with steel nozzle

APPLICATION EXAMPLES

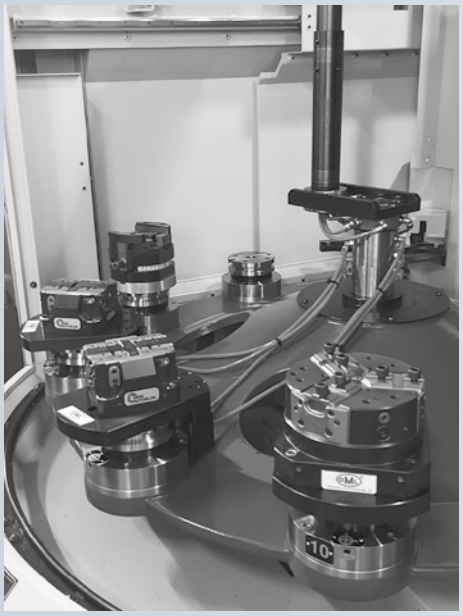

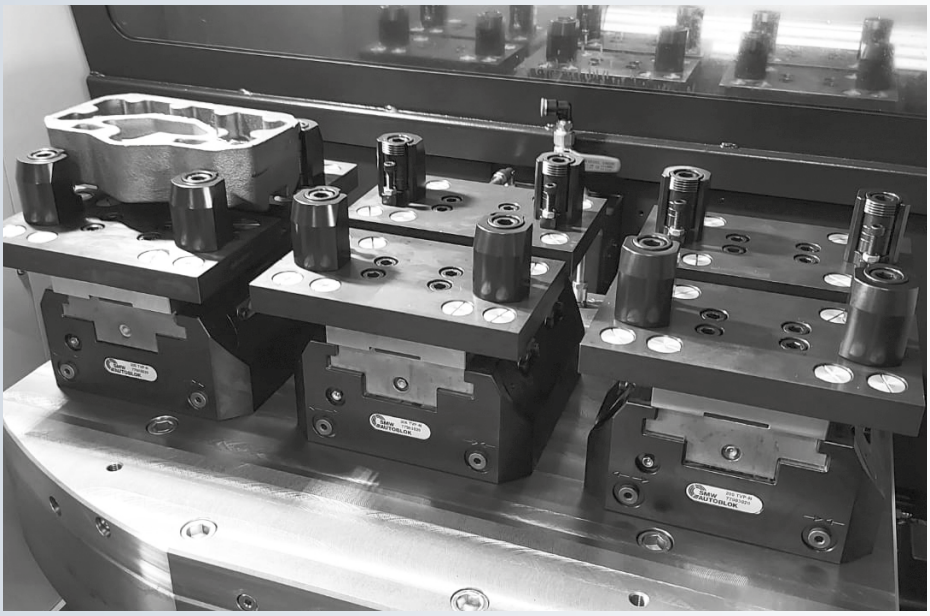

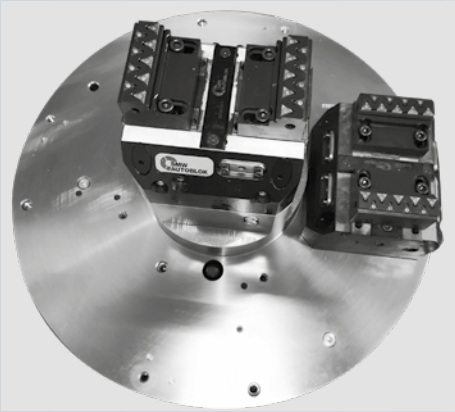

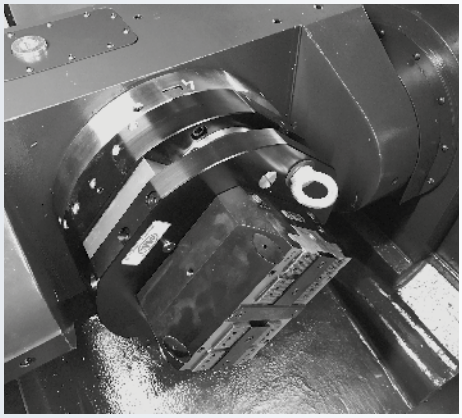

SPECIAL JAWS AND ACCESSORIES

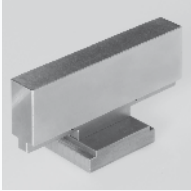

Middle jaw CLAK SYSTEM

Page 11.2

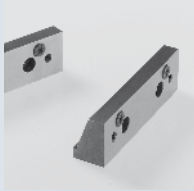

Pair of jaws with grippers UGE

Page 11.2

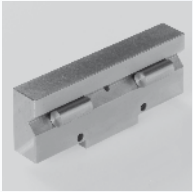

Jaw with rolls

Page 11.2

Middle jaw CLAK SYSTEM

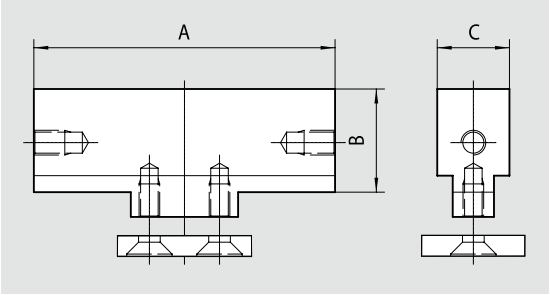

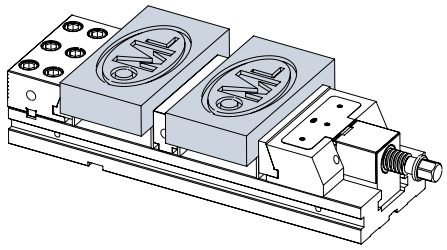

Id. No.	for type	A mm	B mm	C mm
58014109	TC110/MC 125	106	40	32
58024109	TC/MC 150	146	50	32
58034109	TC/MC 200	196	70	48

Jaw with rolls

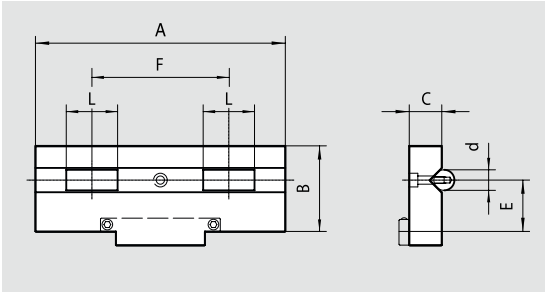

phase 2

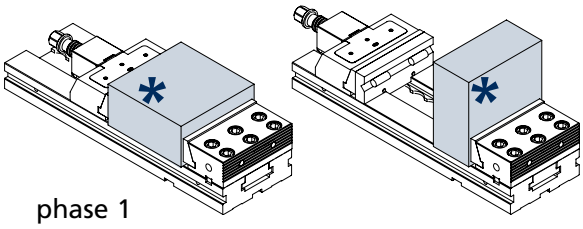

phase 1

* machined surface

Id. No.	for type	A mm	B mm	C mm	d mm	E mm	F mm	L mm
58019709	TC110/MC 125	106	40	19	12	25	60	30
58029709	TC/MC 150	146	50	19	12	30	80	30
58039709	TC/MC 200	196	70	28	16	40	110	40

Pair of jaws with grippers UGE

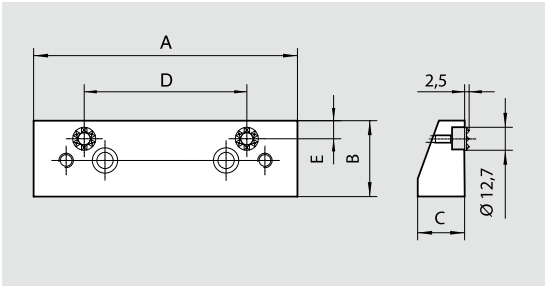

for raw workpieces

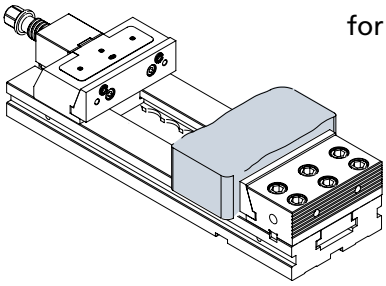

Id. No.	for type	A mm	B mm	C mm	D mm	E mm
58024509	TC/MC 150	146	42	26	90	10
58034509	TC/MC 200	196	60	31	160	12

SELF-CENTERING

Non-rotating self-centering units with manual control; Manual static self-centering chucks, pneumatic, hydraulic

Y CHUCK
NC Clamping Vice

Page 12.2

PB-D
PB-C

Page 12.10

US-CL
US-A

Page 12.4

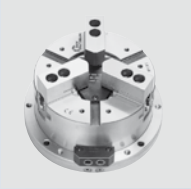

HB-D
HB-C

Page 12.12

M2-PB
M4-PB

Page 12.6

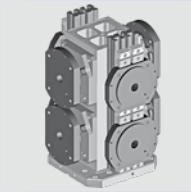

Examples

Page 12.14

STP

Page 12.8

Y CHUCK

STATIC CHUCK

The static chuck YC joins SC range with a new feature to change in an extremely compact and strong vise.

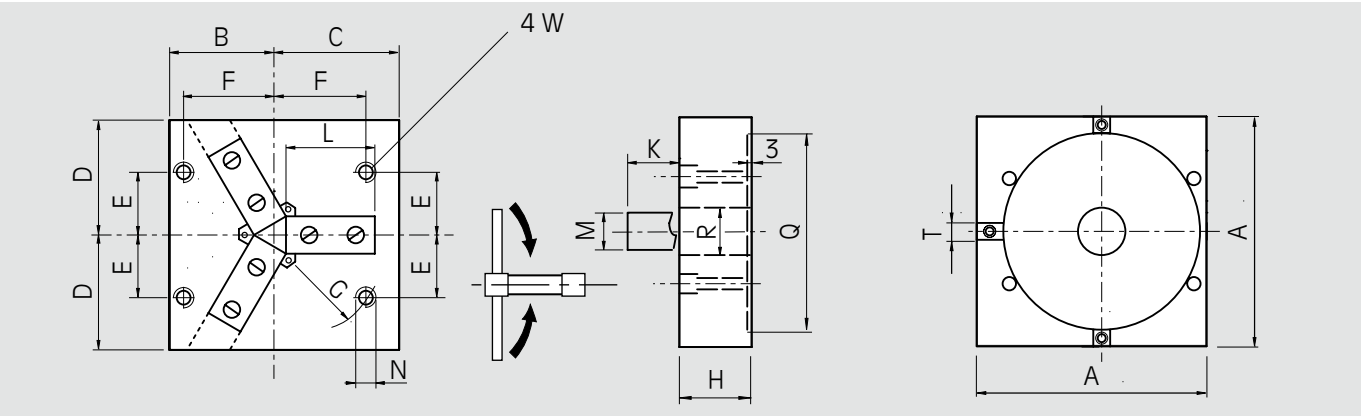

Dimensions

Id. No	type	A mm	B mm	C mm	D mm	H mm	R mm	Q mm	N mm	G mm	T mm	E mm	F mm	W mm
51 99 13 33	Y - 120	120	55	65	60	43	ø25	--	10	55	12	18	49	M 5
51 99 13 34	Y - 160	160	70	90	80	65	ø34	ø119	12	73,5	18	21	63	M 6
51 99 13 35	Y - 200	200	90	110	100	65	ø44	ø170	12	99	18	45	80	M 8
51 99 13 36	Y - 300	300	140	160	150	65	ø104	ø270	12	147	18	80	120	M 10

Specification

type	Jaw stroke	Input torque N-m	Gripping force kN	Gripping range mm	Weight kg
Y - 120	7	50	11	8 ~ 90	4,5
Y - 160	10	100	22	15 ~ 126	12
Y - 200	15	130	33	20 ~ 173	19
Y - 300	25	150	38	40 ~ 266	40

Soft-jaw dimensions

type	K mm	L mm	M mm	Id. No
Y - 120	30	60	19	51991366
Y - 160	41	70	30	51991367
Y - 200	43	85	30	51991368
Y - 300	54	115	45	51991369

Fixed jaw

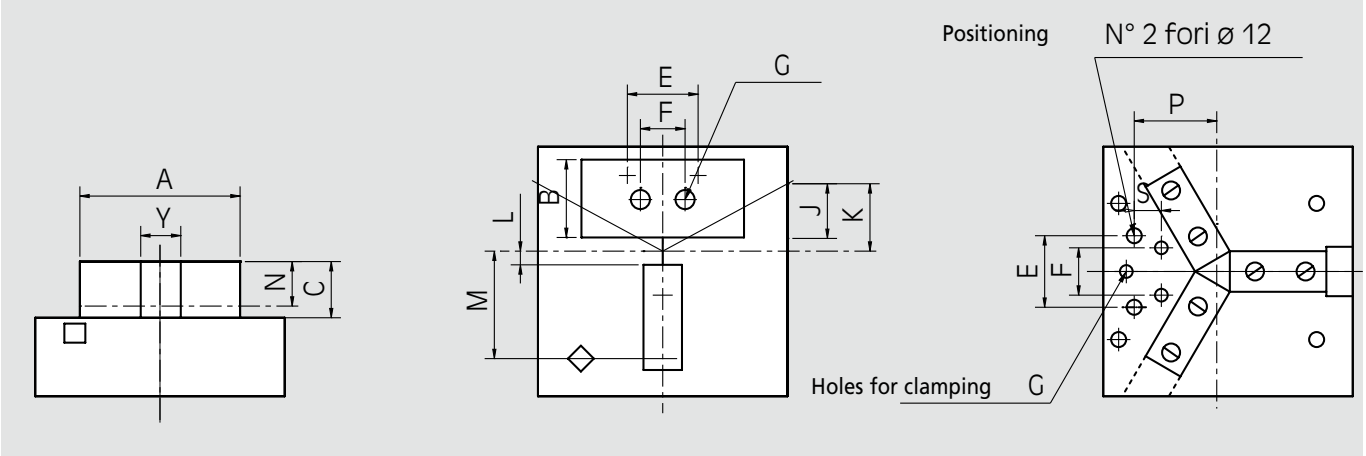

Id. No	type	A mm	B mm	C mm	E mm	F mm	G mm	N mm	Y mm	S mm	P mm	min J mm	max K mm	min L mm	max M mm
51 99 13 37	Y - 120	80	45	30	60	30	2-M6	16	18	10	45	12	45	6	55
51 99 13 38	Y - 160	100	45	41	70	30	2-M8	18	30	10	53	20	40	10	65
51 99 13 39	Y - 200	130	62	43	60	40	2-M10	20	30	20	65	15	50	10	70
51 99 13 40	Y - 300	160	115	54	60	120	3-M12	35	45	20	105	15	100	13	120

Working examples

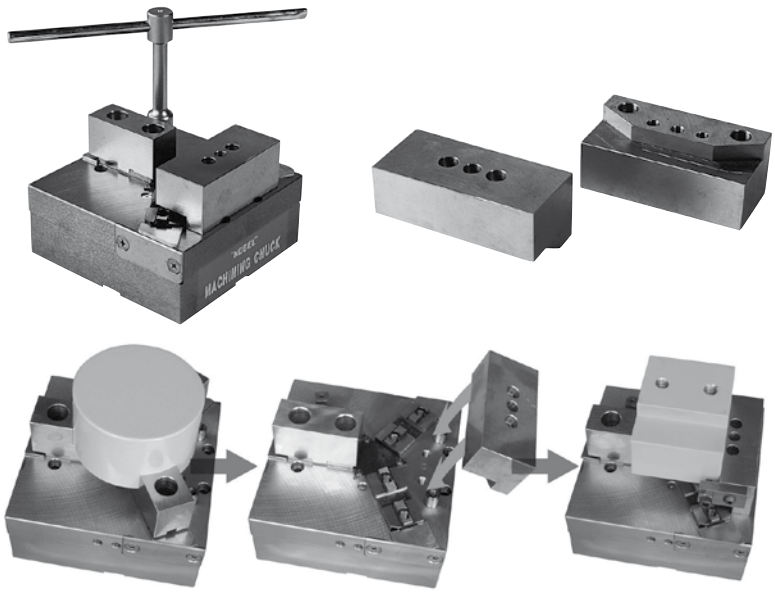

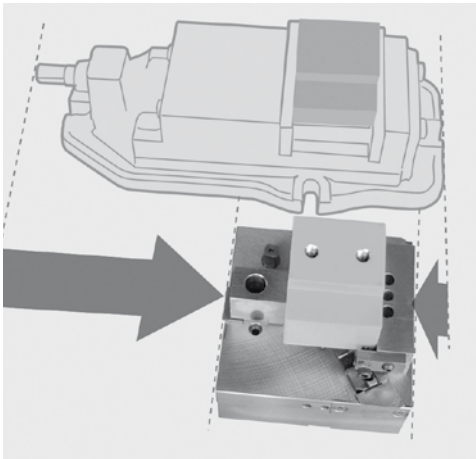

US-CL

with 2 jaw long stroke chuck

US-A

with 3 jaw long or normal stroke chuck

Static hydraulic gripping units Ø 80 - 315 mm

- Static cylinder + chuck units
- Closed center chucks type CL/AN/A

Application/customer's benefit

Gripping units designed to suit special purpose machines and transfer lines
Also used as loading chucks to handle workpieces

Technical features

Fully independent static hydraulic gripping unit with the possibility to equip the actuating cylinder with different kinds of chucks, 2 or 3 jaws, long or short stroke, serrated or tongue & groove master jaws
Aluminium cylinder housing connected to the closed center power chuck with a steel flange
The cylinder needs a constant oil feed during clamping operation
Remark: when ordering please specify the position of the oil connectors (on the side or on the back)
For chuck details please see technical details of the selected chuck

Standard equipment

Standard chuck with cylinder and connecting parts

Ordering example

US 125-CLC with rear oil connection
or
US 250-AND with side oil connection and chuck 90° revolved

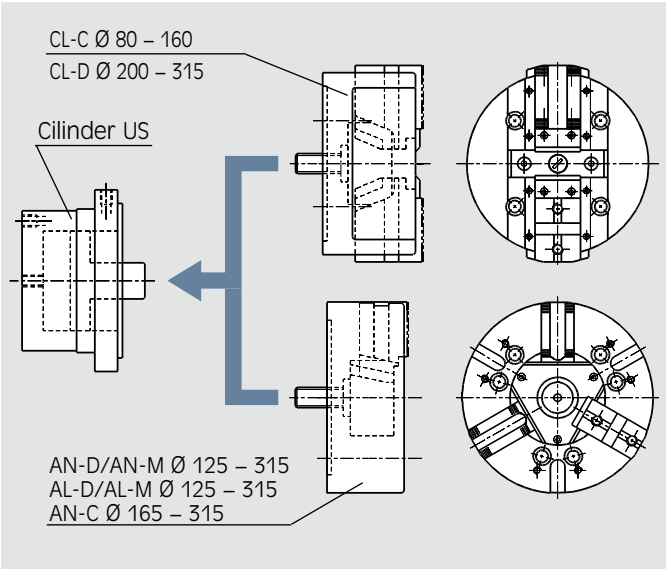

- **US-CL-C** = cylinder equipped with a 2 jaw chuck type CL-C (long stroke/tongue & groove). Chuck Ø 80 to 160 mm
- **US-CL-D** = cylinder equipped with a 2 jaw chuck type CL-D (long stroke/inch serration). Chuck Ø 200 to 315 mm
- **US-AN-D** = cylinder equipped with a 3 jaw chuck type AN-D (normal stroke/inch serration). Chuck Ø 125 to 315 mm
- **US-AN-M** = cylinder equipped with a 3 jaw chuck type AN-M (normal stroke/metric serration). Chuck Ø 125 to 315 mm
- **US-AL-D** = cylinder equipped with a 3 jaw chuck type AL-D (long stroke/inch serration). Chuck Ø 125 to 315 mm
- **US-AL-M** = cylinder equipped with a 3 jaw chuck type AL-M (long stroke/metric serration). Chuck Ø 125 to 315 mm
- **US-AN-C** = cylinder equipped with a 3 jaw chuck type AN-C (normal stroke/tongue & groove). Chuck Ø 165 to 315 mm
- **Special units** = on request the US cylinder can be equipped with other chucks, for example with a quick jaw change chuck type **AN-RM** with stationary cylinder available

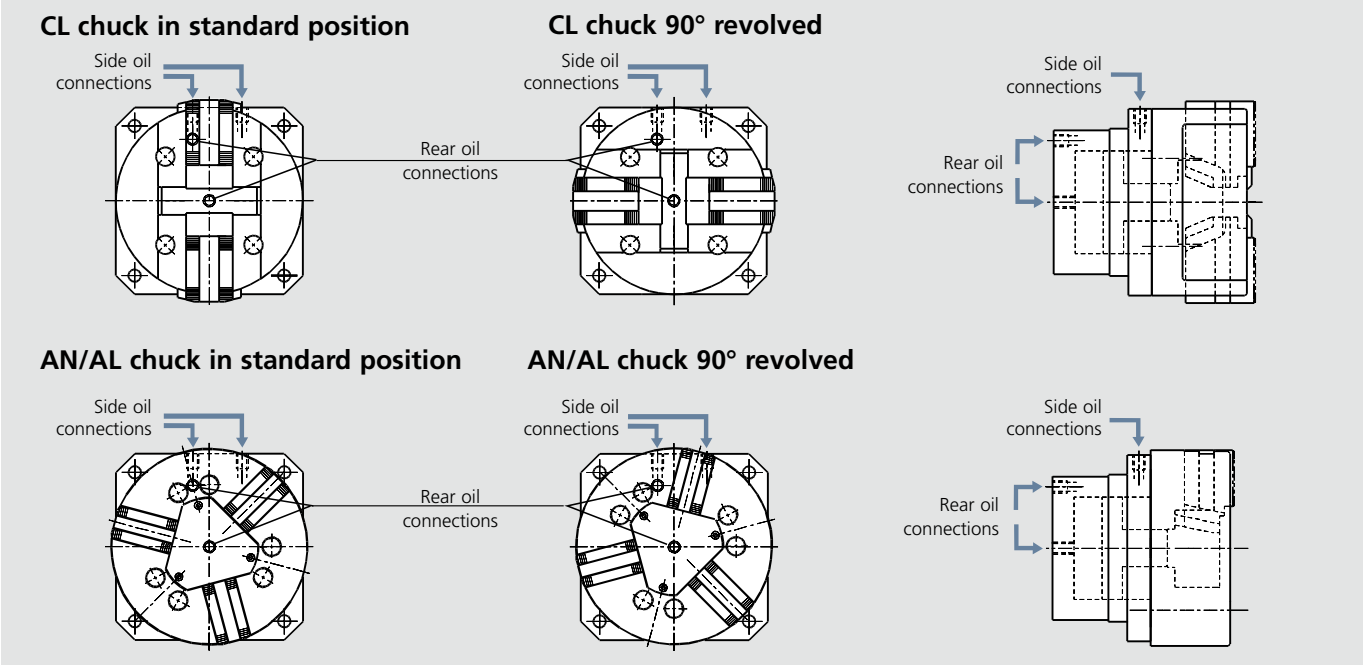

- The chuck can be mounted on the cylinder 90° revolved if the standard position creates interferences with the working cycle. Please specify in the order, if a revolved position is needed.
- The oil connections can be on the side or on the back of the cylinder in order to ease the installation of the gripping unit. Please specify in the order, which version is preferred.

Static hydraulic gripping units Ø 80 - 315 mm

- Static cylinder + chuck units
- Closed center chucks type CL/AN/A

US-CL

with 2 jaw long stroke chuck

US-A

with 3 jaw long or normal stroke chuck

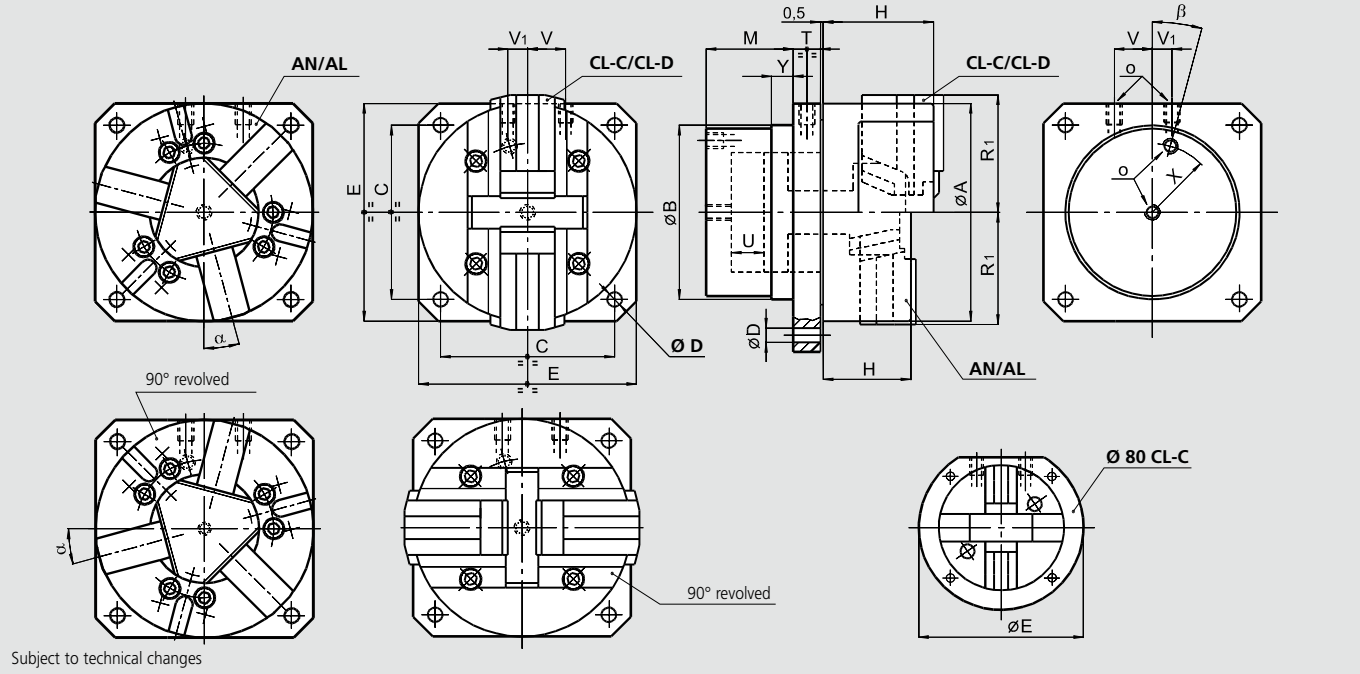

US actuating cylinder dimensions

SMW-AUTOBLOK cylinder		US 80	US 100	US 125	US 160 US 165	US 200	US 250	US 315
Id. No.		77755008	77755010	77755013	77755016	77755120	77755025	77755031
B h7	mm	70	84	106	128	158	185	185
C	mm	66	84	104	130	160	200	250
D	mm	7	9	11	11	13.5	17	17
E	mm	105	100	130	160	200	250	315
M	mm	45	52	60	70	80	90	90
O oil connections	inch	1/8 BSP	1/8 BSP	1/4 BSP	1/4 BSP	3/8 BSP	3/8 BSP	3/8 BSP
T	mm	16	16	20	20	25	25	25
U	mm	11	14	20	25	30	35	35
V	mm	15	18	12	28	35	41	41
V_1	mm	15	18	12	15	18	15	15
X	mm	27	33	43	52	63	75	75
Y	mm	10	10	10	20	20	20	20
α	deg.	30°	30°	15°	15°	0°	0°	0°
Piston area	cm^2	16	25	42	68	112	166	166

Units with CL-C and CL-D chucks

SMW-AUTOBLOK Type			US 80-CL-C	US 100-CL-C	US 125-CL-C	US 160-CL-C	US 200-CL-D	US 250-CL-D	US 315-CL-D
	A	mm	80	100	125	160	200	250	315
	H	mm	45	54	76	92	103	109	114
Chuck open	**R_1**	mm	40	50	68	87	108	132	166
Max pressure		bar	38	36	36	37	32	30	36
Max gripping force		kN	9	14	24	40	55	78	95

Units with AN-D/AN-M/AN-C chucks

SMW-AUTOBLOK Type			US 125-AN-D US 125-AN-M -	US 165-AN-D US 165-AN-M US 165-AN-C	US 210-AN-D US 210-AN-M US 210-AN-C	US 250-AN-D US 250-AN-M US 250-AN-C	US 315-AN-D US 315-AN-M US 315-AN-C
	A	mm	127	165	210	254	315
	H	mm	57	71	85	95	105
Chuck open	**R_1**	mm	64	83	105	128	158
	α	deg.	0°	15°	15°	15°	15°
Max. pressure		bar	47	36	31	28	36
Max. gripping force		kN	56	70	105	140	180

Units with AL-D/AL-M chucks

SMW-AUTOBLOK Type			US 125-AL-D US 125-AL-M	US 165-AL-D US 165-AL-M	US 210-AL-D US 210-AL-M	US 250-AL-D US 250-AL-M	US 315-AL-D US 315-AL-M
	A	mm	127	165	210	254	315
	H	mm	57	71	85	95	105
Chuck open	**R_1**	mm	67	86	109	133	164
	α	deg.	0°	15°	15°	15°	15°
Max. pressure		bar	60	44	45	39	45
Max. gripping force		kN	45	54	90	120	135

M2-PB

Multiple fixture with 2 chucks

M4-PB

Multiple fixture with 4 chucks

Pneumatic multiple fixtures for machining centers

- Ø 130 - 315 mm
- 2 or 3 jaws (PB-D / PB-M)
- 3 jaws (PB-C)

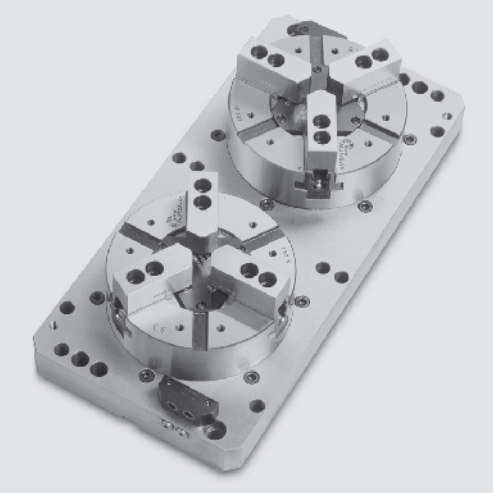

Application/customer's benefit

Multiple self centering chuck fixtures used on milling machines or machining centers to clamp and machine multiple pieces in one set-up

M2-PB: Multiple fixture with 2 chucks type PB-D, PB-C or PB-M
M4-PB: Multiple fixture with 4 chucks type PB-D, PB-C or PB-M

Technical features (more features on chucks see pag. **9**.2.20)

The basic model needs separate circuits to operate the chucks singularly

1st option: SAB safety unit with non-return valve for every chuck

2nd option: single non-return valve to operate all chucks simultaneously, with coupling unit to repressurize the fixtures after the storage of the pallets

3rd option: every chuck can be equipped with a spring loaded clamping unit (internal or external clamping), to hold the workpieces during the pallet transfer

Standard equipment

Multiple chuck fixture
1 set of soft blank top jaws per chuck (PB-C excluded)
Grease gun

Ordering example

Multiple chuck fixture
M2-PBC 250 (3 jaws)
or
Multiple chuck fixture
M4-PBD 165 (2 jaws)

Technical data

SMW-AUTOBLOK Type Code		M2-PBD 3 (3 jaws) 130 77272513	M2-PBD 3 (3 jaws) 165 77272516	M2-PBD 3 (3 jaws) 210 77272521	M2-PBD 3 (3 jaws) 250 77272525	M2-PBD 3 (3 jaws) 315 77272531
SMW-AUTOBLOK Type Code		M2-PBLD 2 (2 jaws) 130 77272713	M2-PBLD 2 (2 jaws) 165 77272716	M2-PBLD 2 (2 jaws) 210 77272721	M2-PBLD 2 (2 jaws) 250 77272725	M2-PBLD 2 (2 jaws) 315 77272731
SMW-AUTOBLOK Type Code		N.D.	M2-PBC 3 (3 jaws) 165 77277916	M2-PBC 3 (3 jaws) 210 77277921	M2-PBC 3 (3 jaws) 250 77277925	M2-PBC 3 (3 jaws) 315 77277931
Chucks radial jaw stroke	mm	3.2	3.6	4.4	5	6.3
Chucks radial jaw stroke PBL-D2 (2 jaws)*	mm	6	6.8	8.4	9.7	12
Actuating cylinder piston area	cm^2	82	143	236	358	548
Max. operating pressure	bar	7	7	7	7	7
Chucks gripping force at 6 bar	kN	14	24	42	64	98
Chucks gripping force at 6 bar PBL-D2 (2 jaws)*	kN	9	16	26	39	60
M2-PB. mass (without top jaws)	kg	29.5	49	83	121	172

* The 2 jaw fixture is available with serrated master jaws (inch or metric) and long stroke only.

Option for the M2-PB and M4-PB fixtures Safety unit that maintains a constant pressure inside the cylinder which maintains a steady clamping force even in case of a drop or lack of line pressure

SAB Safety unit with double non-return valve - Code 27581620.

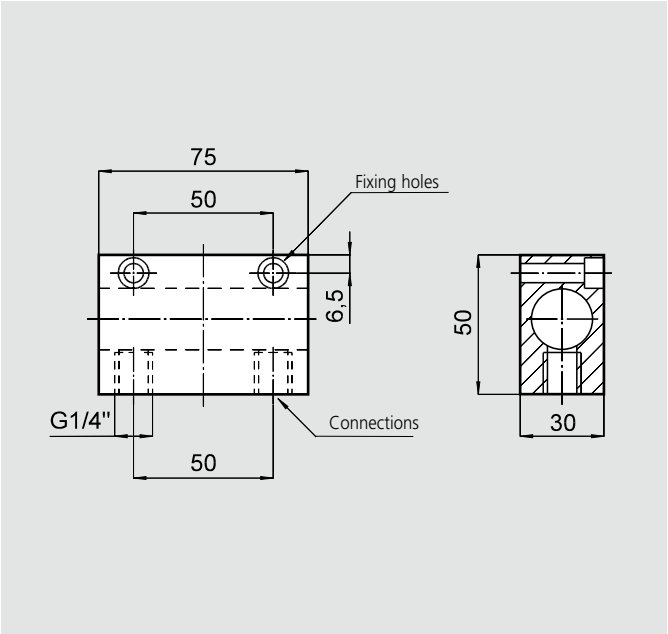

Pneumatic multiple fixtures for machining centers

- Ø 130 - 315 mm
- 2 or 3 jaws (PB-D / PB-M)
- 3 jaws (PB-C)

M2-PB

Multiple fixture with 2 chucks

M4-PB

Multiple fixture with 4 chucks

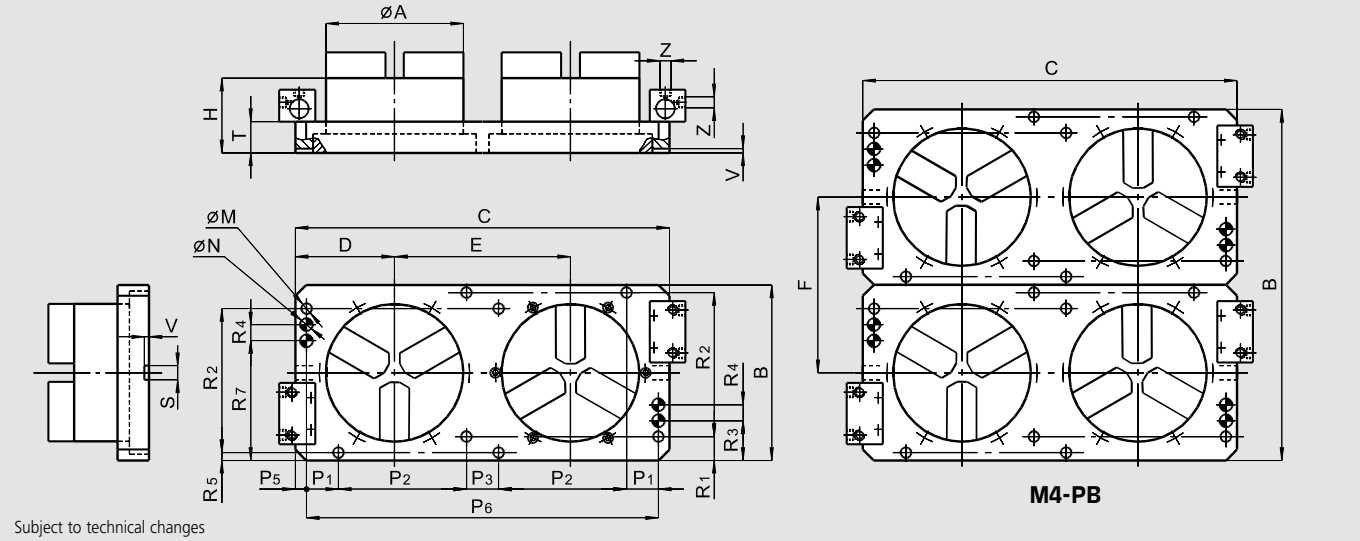

Subject to technical changes

M2-PB dimensions

SMW-AUTOBLOK Type			M2-PB 130	M2-PB 165	M2-PB 210	M2-PB 250	M2-PB 315
Chuck diameter	**A**	mm	135	170	215	260	315
	B	mm	198	224	274	324	374
	C	mm	400	460	585	660	780
	D	mm	107.5	131	155	175	205
	E	mm	185	223	275	310	370
	H	mm	89	100	117	127	141
Fixing holes diameter	**M**	mm	17	17	17	17	17
Reference pin holes	**N** H8	mm	20	20	20	20	20
	P_1	mm	-	50	50	50	50
	P_2	mm	150	150	200	250	300
	P_3	mm	50	50	50	-	-
	P_5	mm	25	17.5	17.5	30	40
	P_6	mm	350	460	550	600	700
	R_1	mm	24	37	37	37	37
	R_2	mm	150	175	225	275	325
	R_3	mm	24	62	62	62	62
	R_4	mm	-	25	25	25	25
	R_5	mm	24	12	12	12	12
	R_7	mm	174	137	187	237	287
	S	mm	14	18	18	18	18
	T	mm	39	44	49	54	54
	V	mm	6	6	6	6	6
Pneumatic connections	**Z**	inch	R1/4"	R1/4"	R1/4"	R1/4"	R1/4"

M4-PB dimensions

SMW-AUTOBLOK Type			M4-PB 130	M4-PB 165	M4-PB 210	M4-PB 250	M4-PB 315
Chuck diameter	**A**	mm	135	170	215	260	315
	B	mm	398	449	549	649	749
	C	mm	400	460	585	660	780
	D	mm	107.5	131	155	175	205
	E	mm	185	223	275	310	370
	F	mm	200	225	275	325	375
	H	mm	89	100	117	127	141
Fixing holes diameter	**M**	mm	17	17	17	17	17
Reference pin holes	**N** H8	mm	20	20	20	20	20
	P_1	mm	-	50	50	50	50
	P_2	mm	150	150	200	250	300
	P_3	mm	50	50	50	-	-
	P_5	mm	25	17.5	17.5	30	40
	P_6	mm	350	460	550	600	700
	R_1	mm	24	37	37	37	37
	R_2	mm	150	175	225	275	325
	R_3	mm	24	62	62	62	62
	R_4	mm	-	25	25	25	25
	R_5	mm	24	12	12	12	12
	R_7	mm	174	137	187	237	287
	S	mm	14	18	18	18	18
	T	mm	39	44	49	54	54
	V	mm	6	6	6	6	6
Pneumatic connections	**Z**	inch	R1/4"	R1/4"	R1/4"	R1/4"	R1/4"

STP

INCH serration 3 jaws

Pneumatic chuck fixtures with built-in cylinder

- Ø 125 - 280 mm
- with THROUGH-HOLE

Application/customer's benefit

Self centering chuck fixtures used on milling machines, machining centers or special machines. Low profile – large open center
Easy installation on the machine

Technical features

Independent units consisting of a 3 jaw chuck with a built in pneumatic cylinder
Relevant gripping force and very high precision
Operating pressure from 2 to 10 bar
Caution! Operating air must be filtered and oiled, to prevent any damage to the seals

Standard equipment

3 jaw chuck
1 set T-nuts with bolts
1 set of soft blank top jaws
2 elbow fittings G1/4"
(G1/8" on STP 125)

Ordering example

3 jaw chuck fixture STP 280
or
3 jaw chuck fixture STP 160

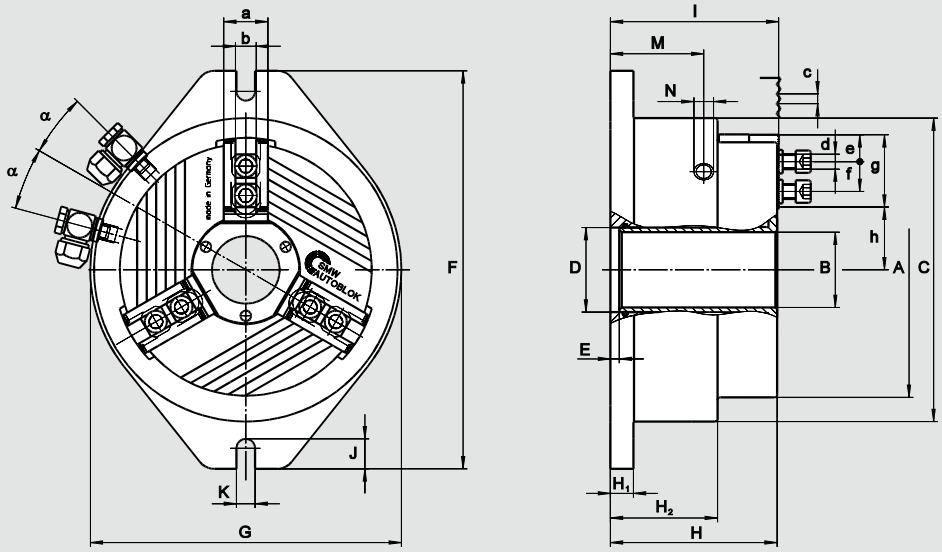

Subject to technical changes

SMW-AUTOBLOK Type Id. No.				STP 125 013904	STP 160 013905	STP 240 053273	STP 280 052810
		A	mm	136	171	240	284
		B	mm	26	38	78	92
		C	mm	156	201	250	316
		D H6	mm	34	46	86	102
		E	mm	8	7.5	7	6
		F	mm	220	275	320	400
		G	mm	160	206	250	316
		H	mm	102.5	130	134	155.5
		H1	mm	14.5	19	18.5	23.5
		H2	mm	66	83	86	97.5
		I	mm	104	132	135.5	157
		J	mm	22	24	24	30
		K	mm	13	15	15	18
		M	mm	57	72	75	86
Pneumatic connections		**N**	inch	G 1/8"	G 1/4"	G 1/4"	G 1/4"
		a	mm	25	30	36	44
		b f7	mm	12	14	17	21
Serration		**c**	inch	1/16" x 90°	1/16" x 90°	1/16" x 90°	1/16" x 90°
Bolt DIN 912 12.9		**d**	mm	M8 x 30	M10 x 35	M12 x 35	M16 x 40
	min.	**e**	mm	4	6	8	12
T-nuts distance	min./max.	**f**	mm	17/25	17/31	22/41.5	25/51
Serration length		**g**	mm	40	50	59	75
	min./max.	**h**	mm	25.9/28.9	24.9/37	57.7/61.9	70/65
		α		15	15	15	7.5

Radial jaw stroke		mm	3	4.1	4.2	5
Operating pressure	min./max.	bar	2/10	2/10	2/10	2/10
Piston area		cm^2	129	206	290	532
Air consumption at 6 bar		l	1	2.4	5.5	6.6
Mass (without top jaws)		kg	19	21	40	56

MHB-D
Hard reversible top jaws

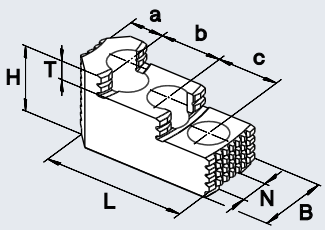

Chuck type	STP 125	STP 160	STP 240	STP 280
Jaw type	MHB-D 125	MHB-D 160	MHB-D 200	MHB-D 251
Jaw Id. No. (set)	12081306	12081636	12082036	12083036
B	30	34	40	5
H	34	39	45	56
L	58	65	82	105
T	8.5	10	10.5	13.5
N	12	14	17	21
Serration	1/16" x 90°	1/16" x 90°	1/16" x 90°	1/16" x 90°
a	13	18	19	26
b	16	16	23	30
c	16	16	23	30
kg/set	0.6	0.9	1.7	2.85

AWB-D
Soft top jaws

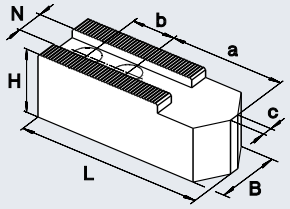

Chuck type	STP 125	STP 160	STP 240	STP 280
Jaw type	AWB-D 125	AWB-D 165	AWB-D 200	AWB-D 250
Jaw Id. No. (set)	12071300	035954	081616	081618
B	30	40	40	50
H	30	40	40	50
L	60	80	90	120
N	12	14	17	21
Serration	1/16" x 90°	1/16" x 90°	1/16" x 90°	1/16" x 90°
a	29	43	53	70
b	16	22	22	28
kg/set	0.9	2.0	2.7	5.1

NST T-nuts

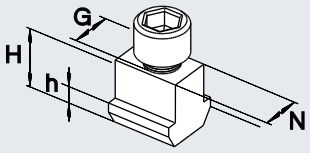

Chuck type	STP 125	STP 160	STP 240	STP 280
T-nut type	NST 12	NST 14	NST 17-4	NST 21-5
T-nut Id. No.	089810	013863	013864	033429
N	12	14	17	21
H	21.5	26.5	26.5	30
h	7.5	9.5	9.5	11
G	M8	M10	M12	M16
Bolt DIN 912 12.9	M8 x 30	M10 x 35	M12 x 35	M16 x 40
Tighten torque	30	50	70	150

PB-D

INCH serration
2 or 3 jaws

PB-C

Tongue & groove
3 jaws

Pneumatic chuck fixtures with built-in cylinder

- Ø 130 - 315 mm
- 2 or 3 jaws

Application/customer's benefit

Self centering chuck fixtures used on milling machines, machining centers or special machines

PB-D: inch serrated master jaws (1/16" x 90°)
PB-C: tongue & groove master jaws (American standard)
PB-M: metric serrated master jaws (1.5 mm x 60°) **on request**

Technical features

Independent units consisting of a 2/3 jaw chuck with a built in pneumatic cylinder
Reduced overall dimensions on the machine
High gripping force and very high precision
Case hardened body to assure highest precision and long chuck life
Caution! Operating air must be filtered and oiled, to prevent any damage to the seals

Standard equipment

Clamping unit
1 set of soft blank top jaws (PB-C excluded)
Grease gun

Ordering example

3 jaw chuck fixture PB-C 250
or
2 jaw chuck fixture PBL-D2 165

Technical data

SMW-AUTOBLOK Type Code		PB-D 3 (3 jaws) 130 77270713	PB-D 3 (3 jaws) 165 77270716	PB-D 3 (3 jaws) 210 77270721	PB-D 3 (3 jaws) 250 77270725	PB-D 3 (3 jaws) 315 77270731
SMW-AUTOBLOK Type Code		PBLD 2 (2 jaws) 130 77271313	PBLD 2 (2 jaws) 165 77271316	PBLD 2 (2 jaws) 210 77271321	PBLD 2 (2 jaws) 250 77271325	PBLD 2 (2 jaws) 315 77271331
SMW-AUTOBLOK Type Code		PB-C 3 (3 jaws) 130 N.D.	PB-C 3 (3 jaws) 165 77276816	PB-C 3 (3 jaws) 210 77276821	PB-C 3 (3 jaws) 250 77276825	PB-C 3 (3 jaws) 315 77276831
Radial jaw stroke	mm	3.2	3.6	4.4	5	6.3
Radial jaw stroke PBL-D2 (2 jaws)*	mm	6	6.8	8.4	9.7	12
Piston area	cm^2	82	143	236	358	548
Max. operating pressure	bar	7	7	7	7	7
Gripping force at 6 bar	kN	14	24	42	64	98
Gripping force at 6 bar PBL-D2 (2 jaws)*	kN	9	16	26	39	60
Mass (without top jaws)	kg	9	17	28	42	63

*The 2 jaw fixture is available with serrated master jaws (inch or metric) and long stroke only.

Option for the PB-D and PB-C chuck
Safety unit that maintains a constant pressure inside the cylinder which maintains a steady clamping force even in case of a drop or lack of line pressure

SAB Safety unit with double non-return valve

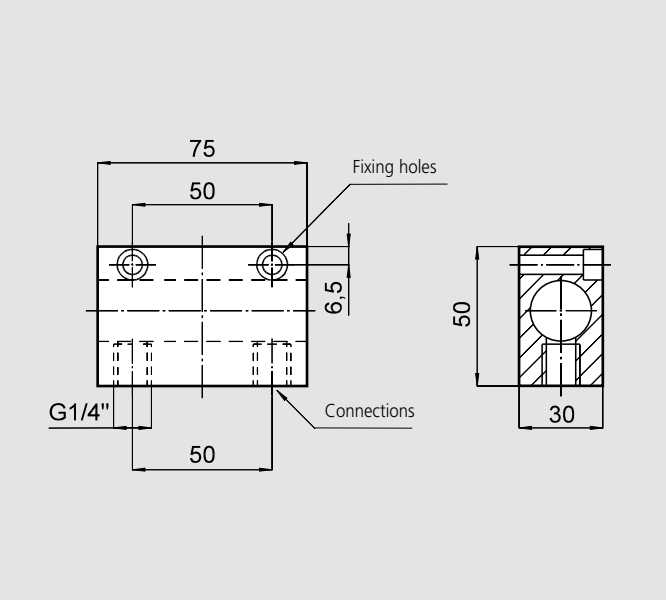

Pneumatic chuck fixtures with built-in cylinder

- Ø 130 - 315 mm
- 2 or 3 jaws

PB-D

INCH serration
2 or 3 jaws

PB-C

Tongue & groove
3 jaws

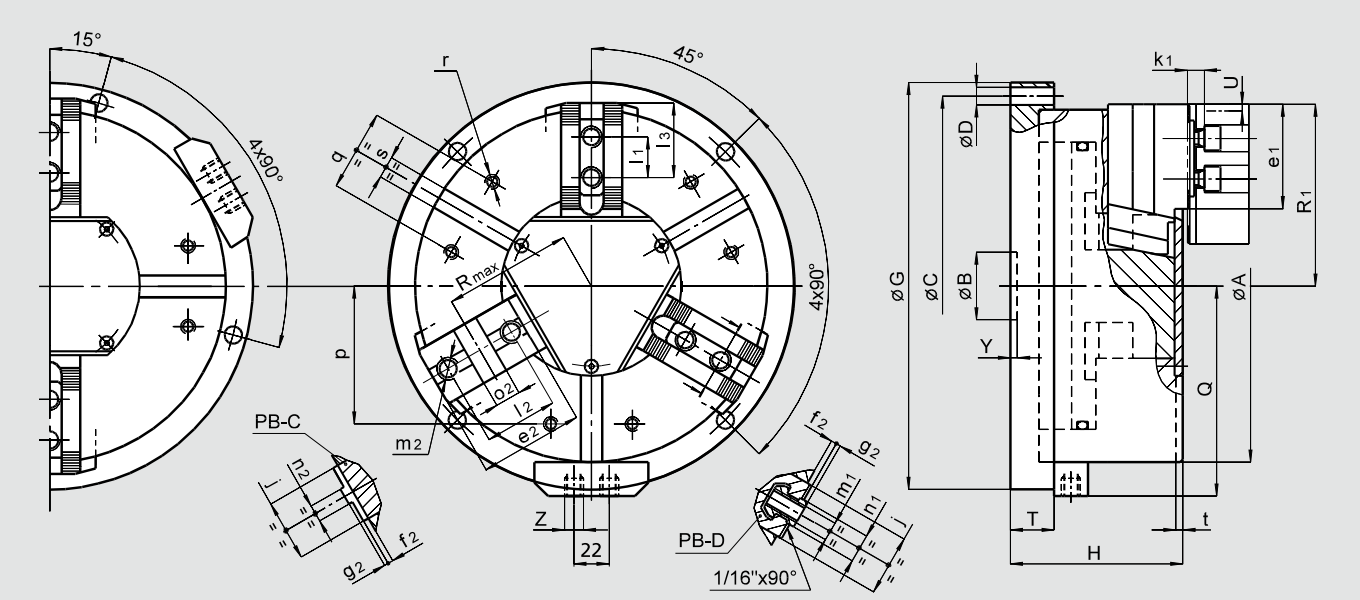

Subject to technical changes

Common dimensions

SMW-AUTOBLOK Type			PB-D 130 PB-C 130	PB-D 165 PB-C 165	PB-D 210 PB-C 210	PB-D 250 PB-C 250	PB-D 315 PB-C 315
	A	mm	135	170	215	260	315
	B	mm	30	30	35	50	50
Fixing holes circle	**C**	mm	155	190	235	280	340
Fixing holes diameter	**D**	mm	9	11	11	13	13
	G	mm	175	210	255	300	360
	H	mm	89	100	117	127	141
	Q	mm	93	110	133	155	183
	T	mm	25	27	30	32	32
Radial jaw stroke (3 jaws)	**U**	mm	3.2	3.6	4.4	5	6.3
Radial jaw stroke PBL-D2 (2 jaws)	**U**	mm	6	6.8	8.4	9.7	12
	Y	mm	5	5	5	5	5
Pneumatic connections	**Z**	inch	R1/4"	R1/4"	R1/4"	R1/4"	R1/4"
	j	mm	26	30	36	45	45
	k_1	mm	10	10	11	12	12
	p	mm	52	65	80	102	120
	q	mm	30	36	45	60	60
	r	mm	M6	M8	M8	M10	M10
	s H12	mm	12	16	16	16	16
	t	mm	5	5	5	5	5

PB-D and PBL-D2 fixtures dimensions

SMW-AUTOBLOK Type			PB-D 130	PB-D 165	PB-D 210	PB-D 250	PB-D 315
	e_1	mm	37	48	60	77	99
	f_1	mm	3	4	3	4	4
	g_1	mm	2.5	2.5	2.5	3.5	3.5
	l_1	mm	16	16.5	23	30	30
T-nut position min./max.	**l_3**	mm	23/30	24/40	33/50	43/62	43/84
	m_1	mm	M8	M10	M12	M16	M16
	n_1 h8	mm	12	14	17	21	21
Chuck open (3 jaw)	**R_1**	mm	71	89	110	134	162
Chuck open PBL-D2 (2 jaws)	**R_1**	mm	74	92	114	138.5	168

PB-C fixtures dimensions (available only in 3 jaw chuck version)

SMW-AUTOBLOK Type			PB-C 130	PB-C 165	PB-C 210	PB-C 250	PB-C 315
	e_2	mm	-	54	71	77	99
	f_2	mm	-	4	4	4	4
	g_2	mm	-	3	3	3	3
	l_2	mm	-	38	44.4	54	63.5
	m_2	mm	-	M10	M12	M16	M16
	n_2 h8	mm	-	7.94	7.94	12.70	12.70
	o_2 H7	mm	-	12.68	12.68	19.03	19.03
Chuck open	**R_1**	mm	-	89	110	134	162
Chuck open	**R_{max}**	mm	-	62	77	94	109

HB-D

INCH serration
2 or 3 jaws

HB-C

Tongue & groove
3 jaws

Hydraulic chuck fixtures with built-in cylinder

- Ø 130 - 315 mm
- 2 or 3 jaws

Application/customer's benefit

Self centering chuck fixtures used on milling machines, machining centers or special machines

HB-D: inch serrated master jaws (1/16" x 90°)
HB-C: tongue & groove master jaws (American standard)
HB-M: metric serrated master jaws (1.5 mm x 60°) **on request**

Technical features

Independent units consisting of a 2/3 jaw chuck with an built in hydraulic cylinder
Reduced overall dimensions on the machine
High gripping force and very high precision
Case hardened body to assure highest precision and long chuck life

Standard equipment

Clamping unit
1 set T-nuts with bolts (HB-C excluded)
Grease gun

Ordering example

3 jaw chuck fixture HB-C 250
or
2 jaw chuck fixture HBL-D2 165

Technical data

SMW-AUTOBLOK Type Code		HB-D 3 (3 jaws) 130 77271113	HB-D 3 (3 jaws) 165 77271116	HB-D 3 (3 jaws) 210 77271121	HB-D 3 (3 jaws) 250 77271125	HB-D 3 (3 jaws) 315 77271131
SMW-AUTOBLOK Type Code		HBL-D 2 (2 jaws) 130 77271713	HBL-D 2 (2 jaws) 165 77271716	HBL-D 2 (2 jaws) 210 77271721	HBL-D 2 (2 jaws) 250 77271725	HBL-D 2 (2 jaws) 315 77271731
SMW-AUTOBLOK Type Code		HB-C 3 (3 jaws) 130 N.D.	HB-C 3 (3 jaws) 165 77277516	HB-C 3 (3 jaws) 210 77277521	HB-C 3 (3 jaws) 250 77277525	HB-C 3 (3 jaws) 315 77277531
Radial jaw stroke	mm	2.8	3.2	4	4.6	5.5
Radial jaw stroke HBL-D2 (2 jaws)*	mm	5.2	6	7.5	8.8	10.5
Piston area	cm^2	59	79	114	167	203
Max. operating pressure	bar	30	30	30	30	30
Gripping force at 25 bar	kN	42	55	85	125	150
Gripping force at 25 bar HBL-D2 (2 jaws)*	kN	26	35	52	75	90
Mass (without top jaws)	kg	10	18	30	44	69

*The 2 jaw fixture is available with serrated master jaws (inch or metric) and long stroke only.

Hydraulic chuck fixtures with built-in cylinder

- Ø 130 - 315 mm
- 2 or 3 jaws

HB-D

INCH serration
2 or 3 jaws

HB-C

Tongue & groove
3 jaws

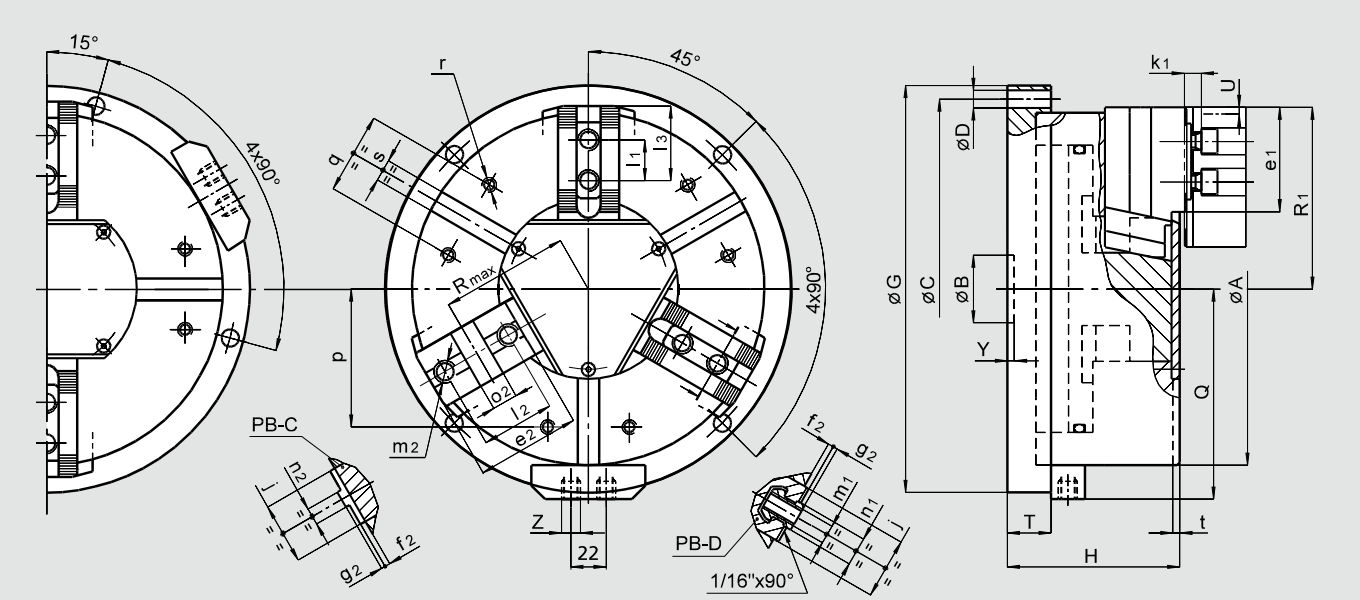

Subject to technical changes

Common dimensions

SMW-AUTOBLOK Type			HB-D 130 HB-C 130	HB-D 165 HB-C 165	HB-D 210 HB-C 210	HB-D 250 HB-C 250	HB-D 315 HB-C 315
	A	mm	135	170	215	260	315
	B	mm	30	30	35	50	50
Fixing holes circle	**C**	mm	155	190	235	280	340
Fixing holes diameter	**D**	mm	9	11	11	13	13
	G	mm	175	210	255	300	360
	H	mm	89	100	117	127	141
	Q	mm	93	110	133	155	183
	T	mm	25	27	30	32	32
Radial jaw stroke (3 jaws)	**U**	mm	2.8	3.2	4	4.6	5.5
Radial jaw stroke HBL-D2 (2 jaws)	**U**	mm	5.2	6	7.5	8.8	10.5
	Y	mm	5	5	5	5	5
Hydraulic connections	**Z**	inch	R1/4"	R1/4"	R1/4"	R1/4"	R1/4"
	j	mm	26	30	36	45	45
	k_1	mm	10	10	11	12	12
	p	mm	52	65	80	102	120
	q	mm	30	36	45	60	60
	r	mm	M6	M8	M8	M10	M10
	s H12	mm	12	16	16	16	16
	t	mm	5	5	5	5	5

HB-D and HBL-D2 fixtures dimensions

SMW-AUTOBLOK Type			HB-D 130	HB-D 165	HB-D 210	HB-D 250	HB-D 315
	e_1	mm	37	48	60	77	99
	f_1	mm	3	4	3	4	4
	g_1	mm	2.5	2.5	2.5	3.5	3.5
	l_1	mm	16	16.5	23	30	30
T-nut position min./max.	**l_3**	mm	23/30	24/40	33/50	43/62	43/84
	m_1	mm	M8	M10	M12	M16	M16
	n_1 h8	mm	12	14	17	21	21
Chuck open (3 jaws)	**R_1**	mm	71	89	110	134	162
Chuck open HBL-D2 (2 jaws)	**R_1**	mm	74	92	114	138.5	168

HB-C fixtures dimensions (available only in 3 jaw chuck version)

SMW-AUTOBLOK Type			HB-C 130	HB-C 165	HB-C 210	HB-C 250	HB-C 315
	e_2	mm	-	54	71	77	99
	f_2	mm	-	4	4	4	4
	g_2	mm	-	3	3	3	3
	l_2	mm	-	38	44,4	54	63.5
	m_2	mm	-	M10	M12	M16	M16
	n_2 h8	mm	-	7.94	7.94	12.70	12.70
	o_2 H7	mm	-	12.68	12.68	19.03	19.03
Chuck open	**R_1**	mm	-	89	110	134	162
Chuck open	**R_{max}**	mm	-	62	77	94	109

EXAMPLES

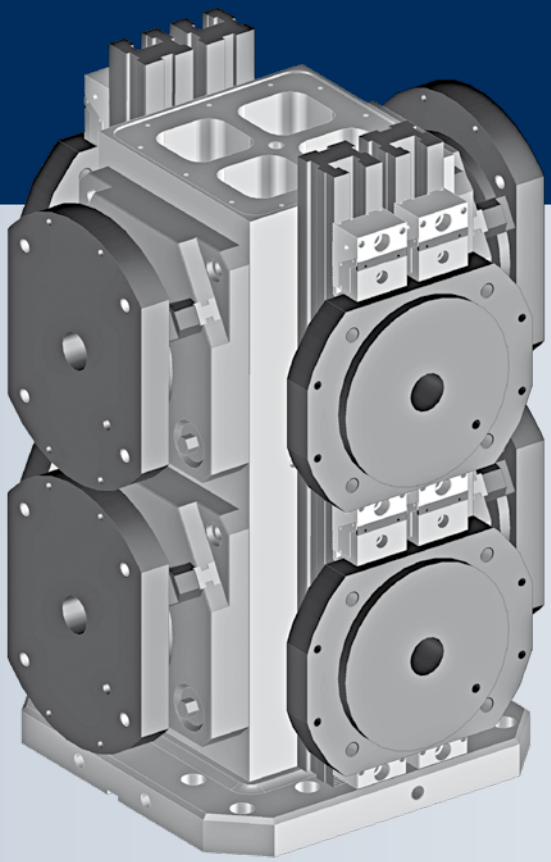

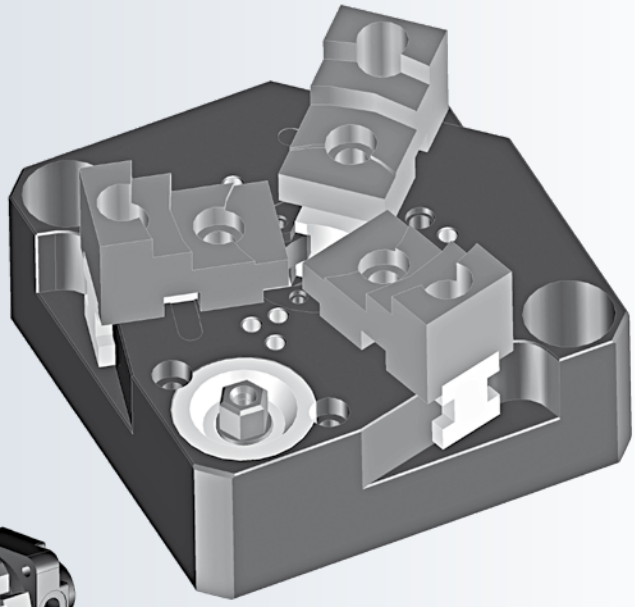

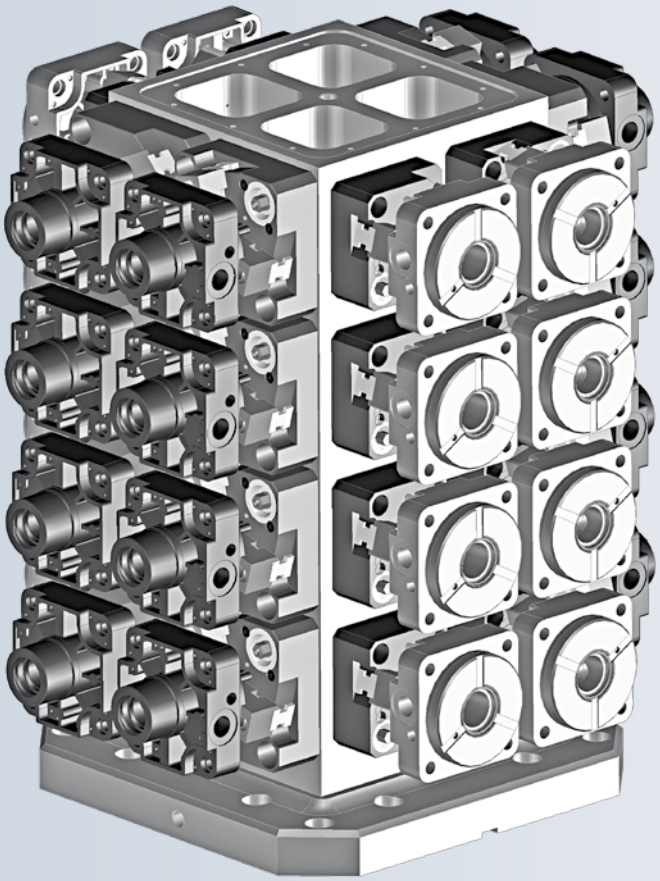

SPEEDY VISE - TC HYDRO

Pneumatic and pneumo-hydraulic equipment

Pag. 13.2

SPEEDY VISE

Pneumatic quick clamping equipment

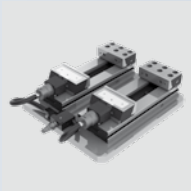

Pag. 13.5

TC HYDRO

Set of modular clamping equipment with hydraulic clamping unit

SPEEDY VISE

Pneumatic quick clamping equipment

■ MOST SUITABLE FOR MASS PRODUCTION ON MACHINE CENTRE

FEATURES

1. Robust contruction of one piece casting of fixed jaw and vise bed.
2. Rigid and high tensile casting of ductile iron FCD60JIS (equal to GGG60) with 60 kg/mm^2 or 80.000 psi tensile strength.
3. Most suitable for mass production and to be used on machine centres, milling machines, drilling machines and special purpose machines.
4. Most compact pneumatic mechanism design. No oil, just joint the air supply will do.
5. Most compact in total length of vise with max clamping capacity.
6. Safety locking mechanism for unexpected termination of air supply. After pneumatic clamping, the workpiece will be clamped firmly even without the air supply.
7. Easy and simple ON-OFF switch control for pneumatic operation. The optional electric control for automatic and FMS system is available.
8. Safety protection max. pneumatic clamping stroke is 4 mm. (Adjust the stroke at 2 mm for a better power capacity)
9. Rapid ON-OFF only 1,5 sec.
10. Multiply pneumatic Quick Vise set up available with only one source of air supply (optional).
11. Free adjusting of max. pneumatic clamping pressure (see graphs) using the air regulator placed nearby the pressure control gauge
12. Vise bed flame hardened to HRC 45°.
13. Down trust "semi-spherical segment" mechanism eliminates jaw lifting and workpiece.

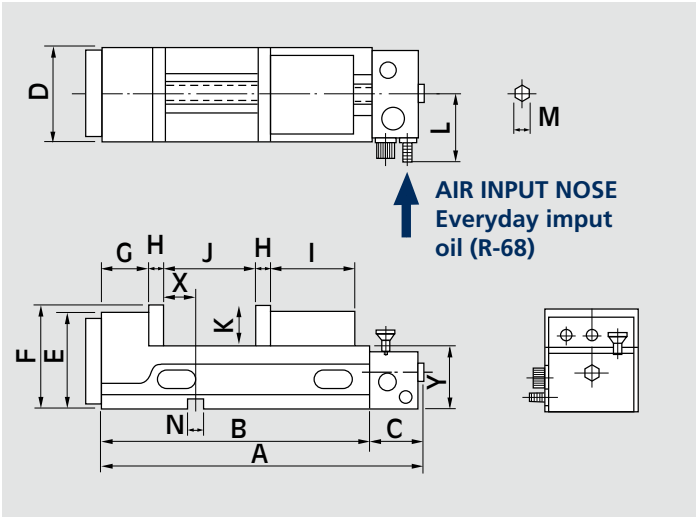

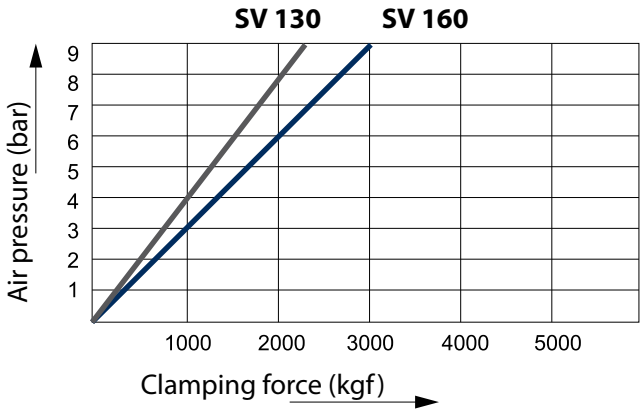

Id. no.	Type	A mm	B mm	C mm	D mm	E mm	F mm	G mm	H mm	I mm	J mm	K mm	L mm	M mm	N mm	X mm	Y mm
77 58 91 21	SV 130	507	405	102	131	152	155	100	15	115	0-140	55	95	14	18	65	100
77 58 92 21	SV 160	534	432	102	161	160	163	115	15	130	0-150	58	105	14	18	65	105

ALWAYS USE FILTERED COMPRESSED AIR

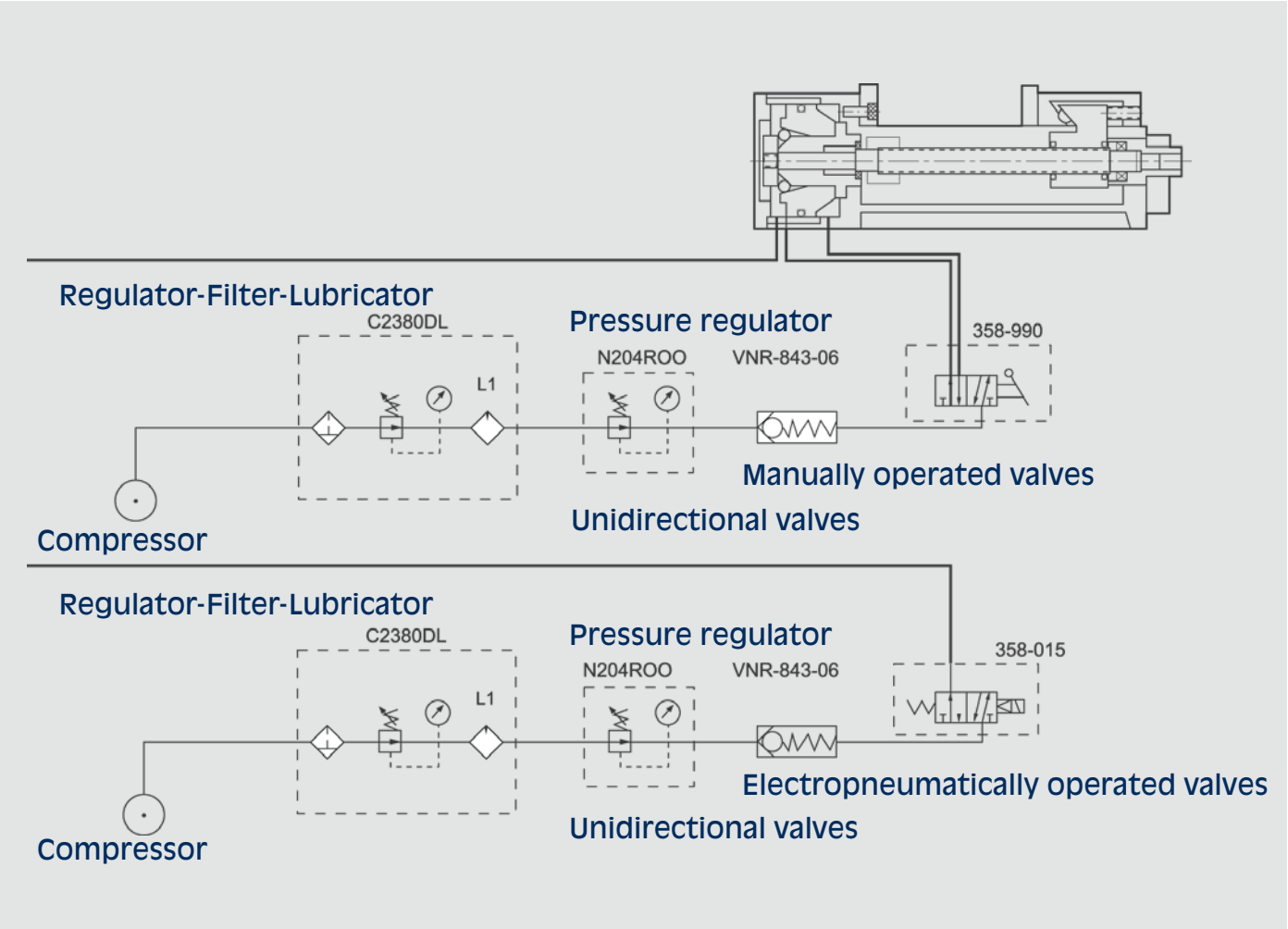

Id. no.	Type	Power kN	Air pressure bar	Stroke mm	Net weight kg	Weight kg
77 58 91 21	SV 130	16	1,5 - 7	0 - 3	40	42
77 58 92 21	SV 160	21	1,5 - 7	0 - 4	52	55

Tolerances

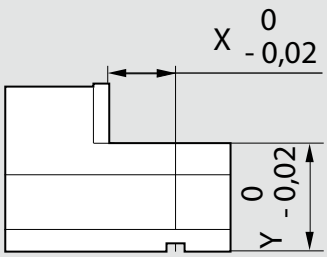

Pair of smooth jaws (HRC 55°-58°)

Id. No.	For type		A mm	B mm	C mm	D mm	E mm	F mm
58 91 41 19	SV 130		90	130	25	55	15	M10x20L
58 92 41 19	SV 160		90	160	25	58	15	M10x20L

Pair of grooved jaws (HRC 55°-58°)

Id. No.	For type		A mm	B mm	C mm	D mm	E mm	F mm
58 91 42 19	SV 130		90	130	25	55	15	M10x20L
58 92 42 19	SV 160		90	160	25	58	15	M10x20L

Pair of V jaws (HRC 55°-58°)

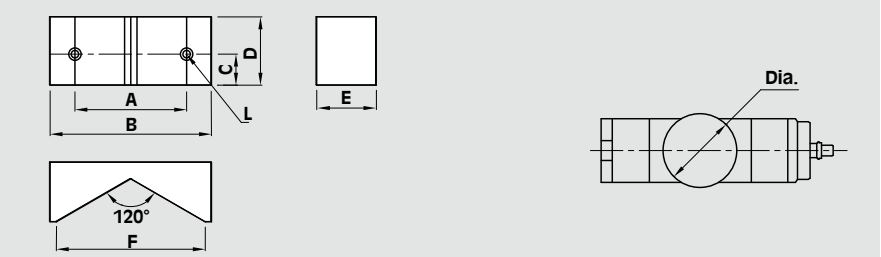

Id. No.	For type	A mm	B mm	C mm	D mm	E mm	F mm	L mm	dia. mm
58 91 44 19	SV 130	90	130	25	55	48	120	M10x16L	100-230
58 92 44 19	SV 160	90	160	25	58	48	120	M10x16L	100-230

Pair of positioning keys

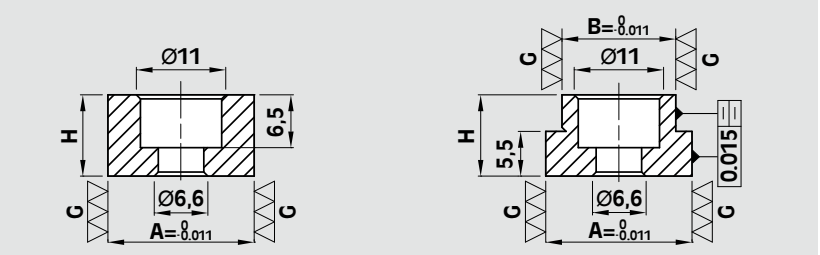

Id. No.	For type	A mm	B mm	H mm	
58 90 13 92	SV 130	18	12	10	25
58 90 13 93		18	14	10	25
58 90 13 94		18	16	10	25
58 90 13 96	SV 160	18	20	10	25
58 90 13 97		18	22	10	25
58 90 13 95		18	18	10	22

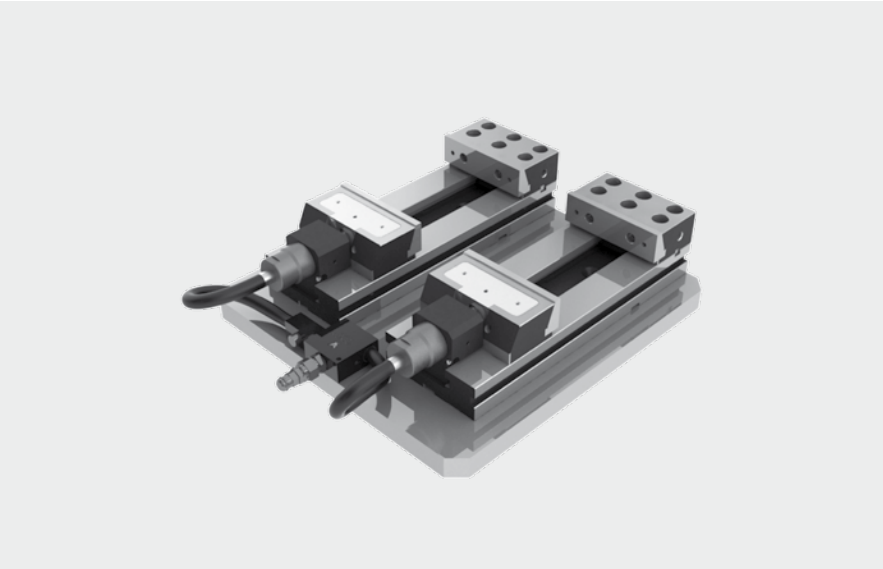

SET TC HYDRO - DUO

Modular clamping equipment with hydraulic clamping unit with:
SUBPLATE
2 TC VISES
SEQUENCE VALVES
CONNECTING PIPES and MANIFOLD

Id. No.	Type
33 58 02 27	TC H DUO 150x200
33 58 02 28	TC H DUO 150x250
33 58 02 29	TC H DUO 150x300

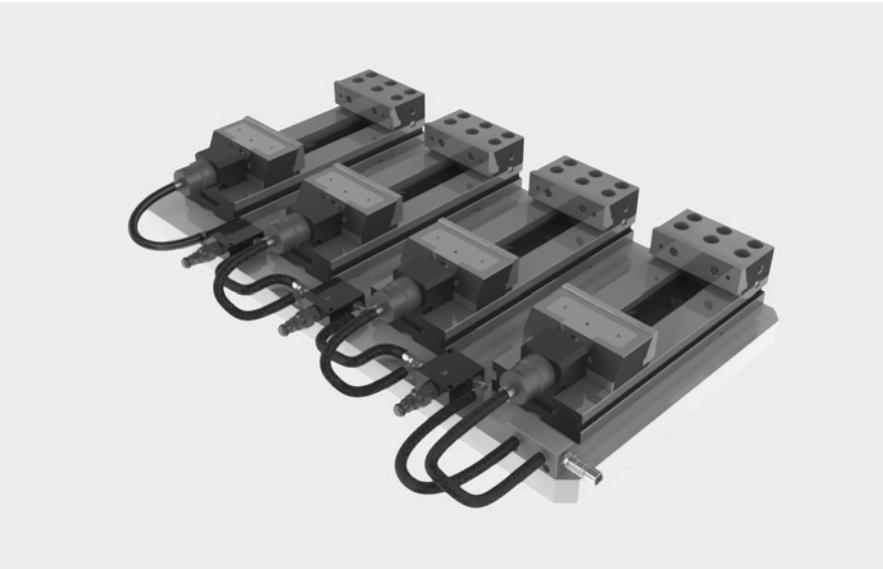

SET TC HYDRO - TETRA

Modular clamping equipment with hydraulic clamping unit with:
SUBPLATE
4 TC VISES
SEQUENCE VALVES
CONNECTING PIPES and MANIFOLD

Id. No.	Type
33 58 02 47	TC H TETRA 150x200
33 58 02 48	TC H TETRA 150x250
33 58 02 49	TC H TETRA 150x300

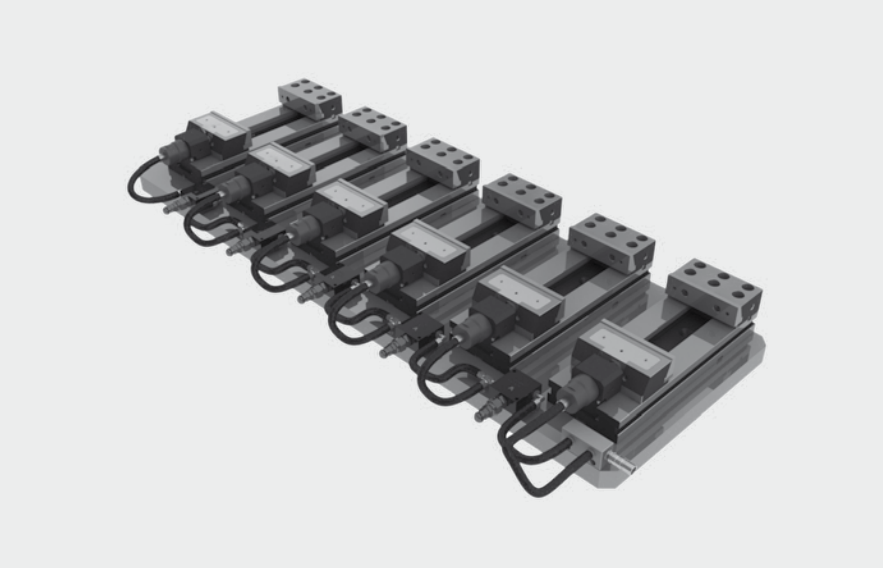

SET TC HYDRO - ESA

Modular clamping equipment with hydraulic clamping unit with:
SUBPLATE
6 TC VISES
SEQUENCE VALVES
CONNECTING PIPES and MANIFOLD

Id. No.	Type
33 58 02 67	TC H ESA 150x200
33 58 02 68	TC H ESA 150x250
33 58 02 69	TC H ESA 150x300

TC HYDRO

Set of modular clamping equipment with hydraulic clamping unit

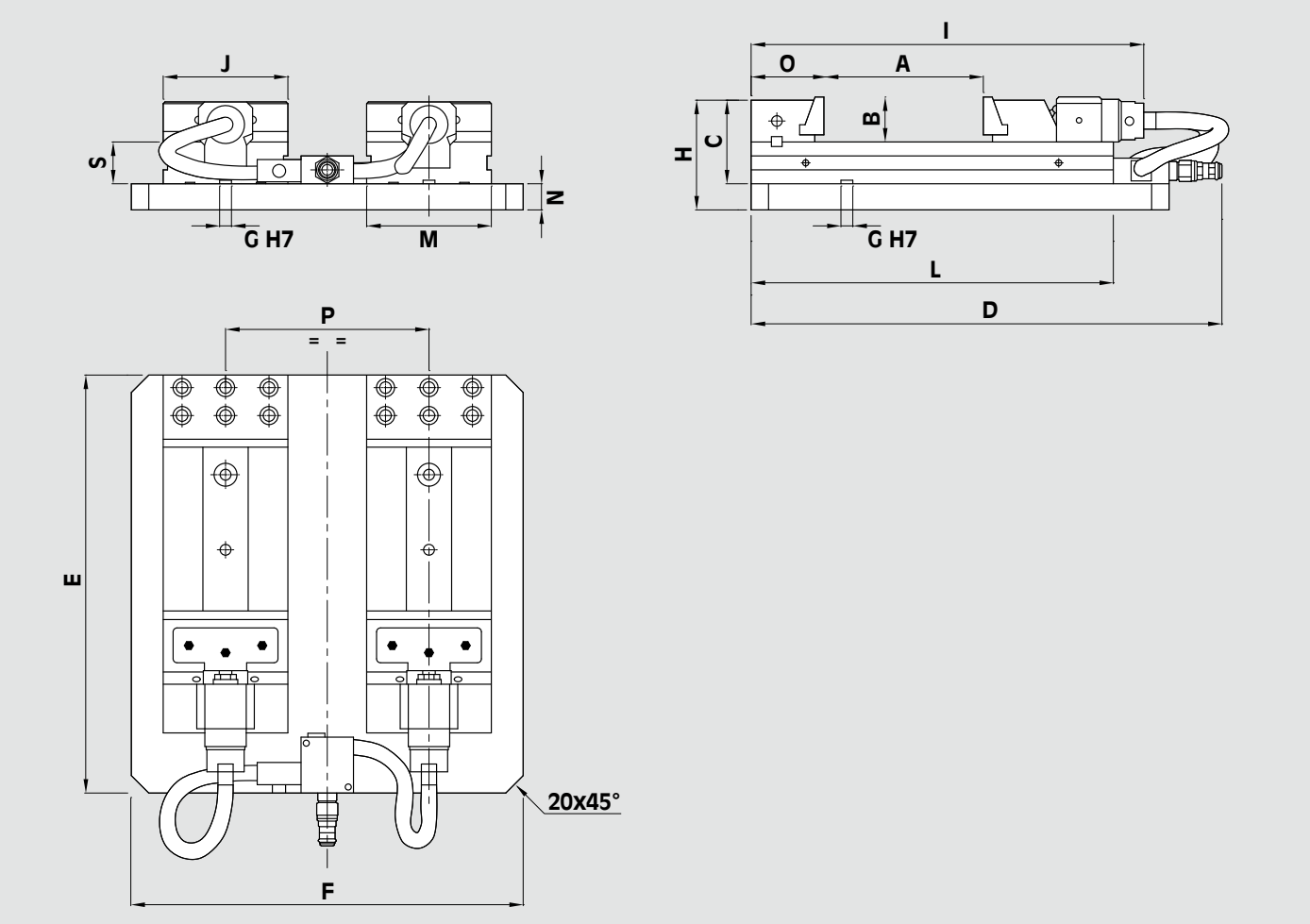

Id. No.	Type	A mm	B mm	C mm	D mm	E mm	F mm	G mm	H mm	I mm	J mm	L mm	M mm	N mm	O mm	P mm	S mm	Weight kg
33 58 02 27	TC H DUO 150x200	200	50	98	550	480	450	18	128	481	150	413	150	30	85	230	48	108
33 58 02 28	TC H DUO 150x250	250	50	98	600	530	450	18	128	531	150	463	150	30	85	230	48	118
33 58 02 29	TC H DUO 150x300	300	50	98	650	580	450	18	128	588	150	520	150	30	85	230	48	128
33 58 02 47	TC H TETRA 150x200	200	50	98	550	480	900	18	138	481	150	413	150	40	85	230	48	249
33 58 02 48	TC H TETRA 150x250	250	50	98	600	530	900	18	138	531	150	463	150	40	85	230	48	271
33 58 02 49	TC H TETRA 150x300	300	50	98	650	580	900	18	138	588	150	520	150	40	85	230	48	295
33 58 02 67	TC H ESA 150x200	200	50	98	550	480	1370	18	138	481	150	413	150	40	85	230	48	378
33 58 02 68	TC H ESA 150x250	250	50	98	600	530	1370	18	138	531	150	463	150	40	85	230	48	411
33 58 02 69	TC H ESA 150x300	300	50	98	650	580	1370	18	138	588	150	520	150	40	85	230	48	448

Air/oil foot pump

Id. No.

71 66 03 05

Air/oil manual pump

Id. No.

71 66 03 15

Pressure - gauge

Id. No.

51 43 12 51

Working example

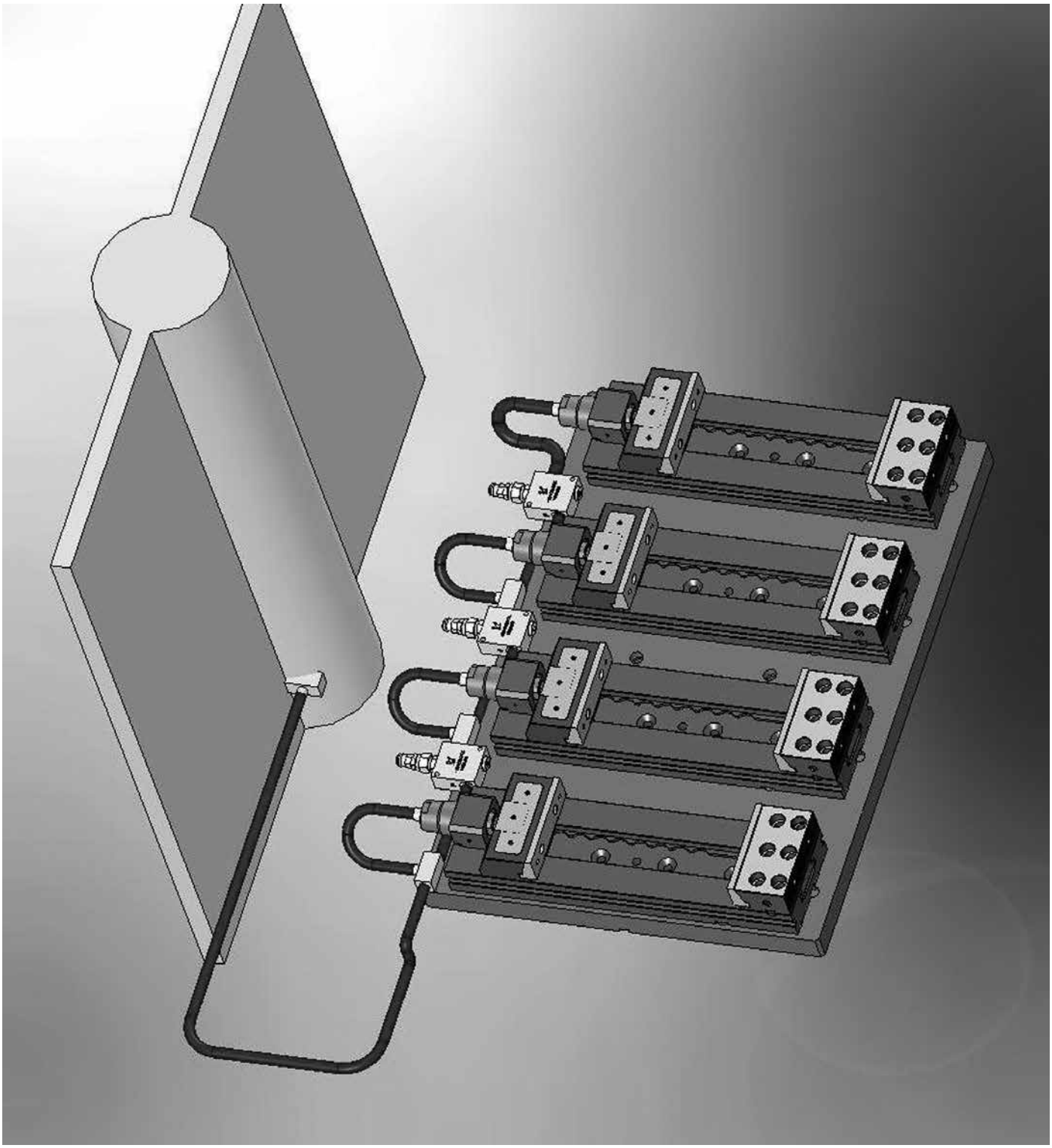

NOTES

FAST CLAMPS

FAST CLAMPS

Page 14.4

Work locators

Page 14.36

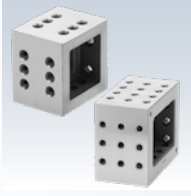

Risers + V blocks

Accessories

Page 14.40

Centering pin

Page 14.47

Side Clamps

Page 14.48

Hook Clamps

Page 14.65

Adjustable stops

Page 14.69

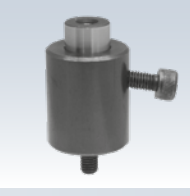

Work supports

Page 14.72

Remote control units

Page 14.80

Contact bolts

Page 14.81

Clamp screws

Page 14.83

Fast Clamps

Speedier In Setup Than Conventional Manual Clamping

No tools needed

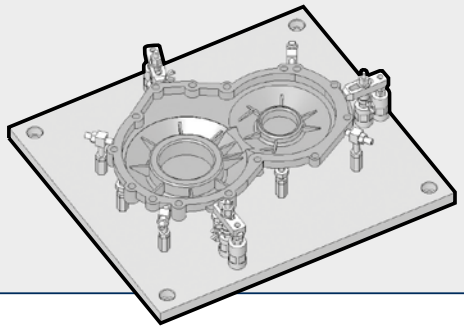

More Economical Than Hydraulic Clamping

Much lower fixture costs
Maintenance free

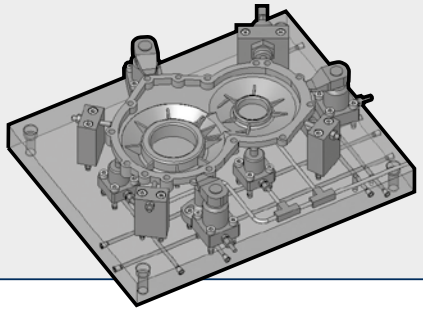

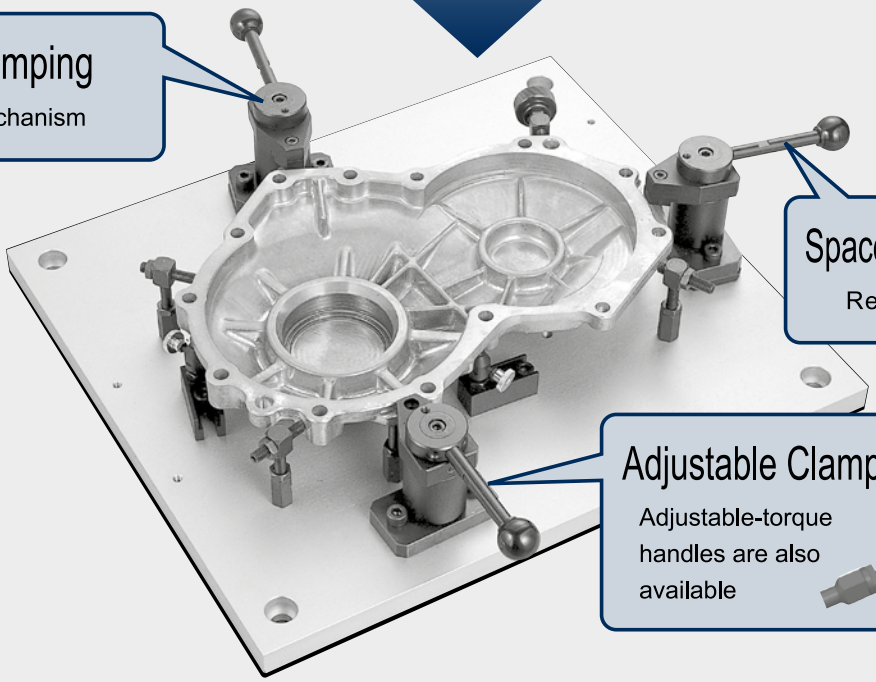

Positive Clamping

Spiral cam mechanism

Space-Saving Design

Removable handle

Adjustable Clamping Force

Adjustable-torque handles are also available

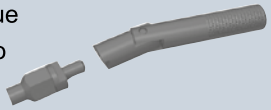

Fast Clamps serve for varied applications in machining and assembly jobs in different industries.

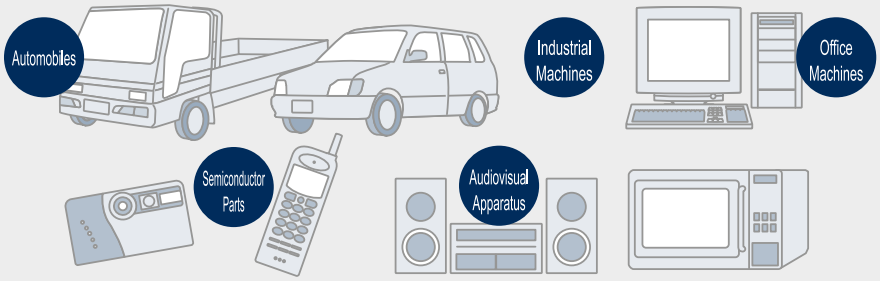

Added Product Items Offer A Wider Range Of Applications

Stronger Clamping Force
Clamping-Height Adjustment

Greater Performance

Clamping Force

NEW

Pull Clamps Heavy

Clamping Range:up to 2.5mm
Clamping Force:up to 8,000N

Swing Clamps Heavy

Clamping Range:up to 1.6mm
Clamping Force:up to 6,000N

NEW

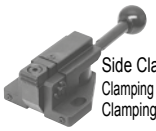

Side Clamps, Standard
Clamping Range:2mm
Clamping Force:up to 4,000N

Push Clamps, Standard
Clamping Range:up to 2.5mm
Clamping Force:up to 4,000N

Pull Clamps, Standard
Clamping Range:up to 2mm
Clamping Force:up to 2,500N

Swing Clamps, Standard
Clamping Range:up to 1.8mm
Clamping Force:up to 1,200N

Clamping-Height Adjustment

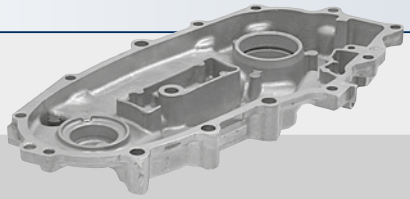

Die-Cast Parts

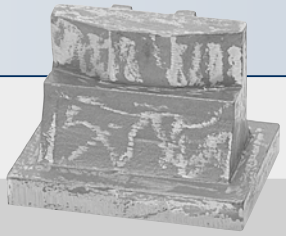

Cast-Iron Parts

This extended line of Fast Clamps allows clamping parts made from materials ranging from non-ferrous metals like aluminum, zinc, etc. to cast iron and steel.

Setting a clamping force is important when clamping a part that can easily get strained.

To compensate for variations between castings, a long clamping height range is needed. Clamping force is also an important factor for castings that receive a comparatively heavy load when being machined.

QLPD PULL CLAMPS(Standard)

With Handle　　Without Handle

Note) Clamping Pins or Screws must be ordered separately.

Body & CAM	
Material	SCM440 steel
Finish	Black oxide
Heat Treat	Quenced and tempered

Handle	
Material	S45C steel
Finish	Black oxide

Ball Knob	
Material	ABS resin
Color	Black

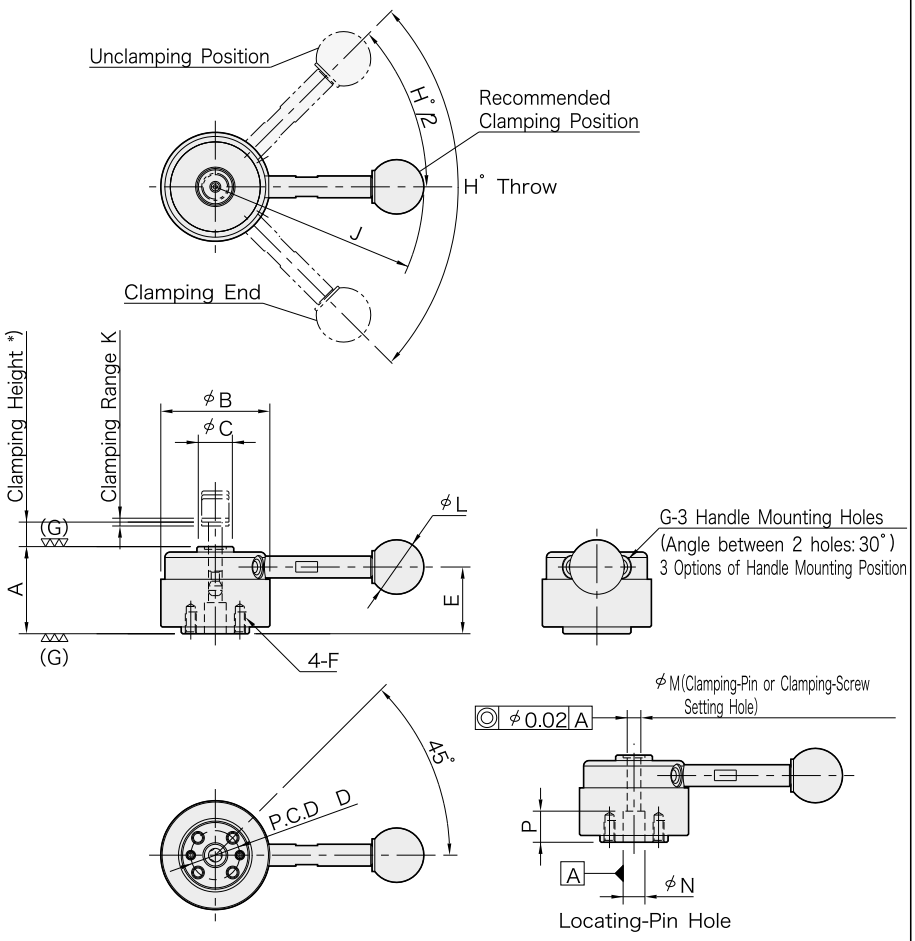

How To Use

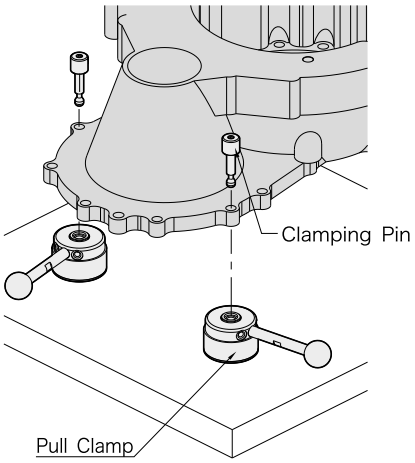

How To Locate Workpiece

1. Basic Method

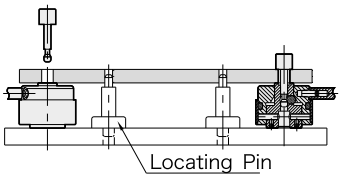

2. Method for clamping and locating a workpiece at a time
Give an accuracy shown below to the hole spacing
to generate a locating accuracy of ±0.08.

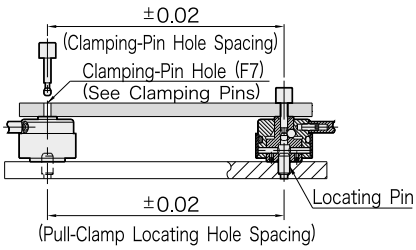

Series	A (±0.01)	B	C	D (P.C.D)	E	F	G	H	K	M (F7)
QLPD150	32	40	13.5	18	24.5	M4x0.7 8 deep	M5x0.8	90°	1.5	5
QLPD200	40	50	18	25	30.7	M6x1 9 deep	M6x1	110°	2	8

Series	N (G6)	P	Clamping Force (N)	Clamping Mechanism	Recommended Workpiece Thickness Tolerance **)
QLPD150	8	10	900	Spiral Cam Cam Angle:4°	±0.3
QLPD200	12	13	2500		±0.5

With Handle

Part Number	J	L	Allowable Operating Load (N) ***)	Weight (g)
51991101	76.5	20	150	245
51991102	111.5	25	200	470

Without Handle

Part Number	Weight (g)
51991103	220
51991104	420

*) Grip length of Clamping Pin(workpiece thickness)
**) Maintaining these recommended tolerances allows minimizing the variation of handle position in the clamping mode in clamping with the use of the Clamping Pin.
***) Allowable load to operate the handle.

Technical Infomation

Allowable Loads in Machining of Workpiece Bottom

Ensure that a force more than indicated below is not applied to the workpiece bottom.

Series	Allowable Force To Workpiece Bottom (Per Clamp)
QLPD150	max.2000N
QLPD200	max.5500N

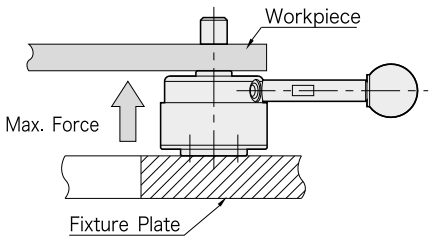

QLPD-X CLAMPING PINS(Standard)

Shank	
Material	SCM435 steel
Finish	Precision ground
Heat	Treated (shank end)

Head	
Material	SCM45C steel
Finish	Black oxide
Heat Treat	Quenched and tempered

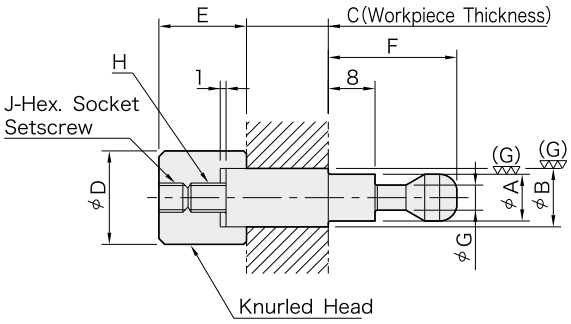

C dimension is adjustable by +/-1mm to fit actual workpiece thickness.

How To Use

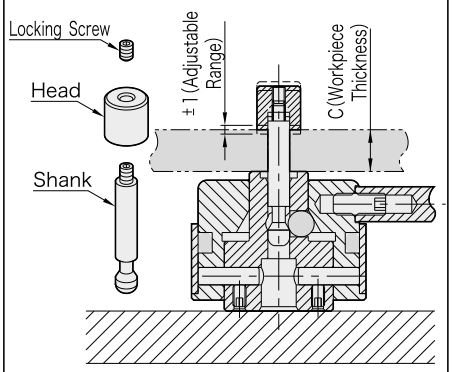

Part Number	A (f7)	B (f7)	C *) (By 0.1mm)	D	E	F	G	H	J	Pull Clamps	Weight (g)
51991105 -(C Dim. in mm)	5	5	3≦C≦50	10	10	17	3	M3x0.5	M3x0.5-4L	QLPD150 Series	min. 8 to max.16
51991106 -(C Dim. in mm)		6									min. 8 to max.19
51991107 -(C Dim. in mm)	8	8	4≦C≦80	16	15	22	4.3	M5x0.8	M5x0.8-5L	QLPD200 Series	min.30 to max.60
51991108 -(C Dim. in mm)		10									min.31 to max.77

*) For ordering, specify workpiece thickness.

Ordering Example

QLPD150-5x5-10.5

Shank Size C Dim.

・Custom Clamping Pins(different B dimensions) are available on request.

QLPD-M CLAMPING SCREWS(Standard)

Material	SCM440 steel
Finish	Black oxide
Heat Treat	Quenched and tempered

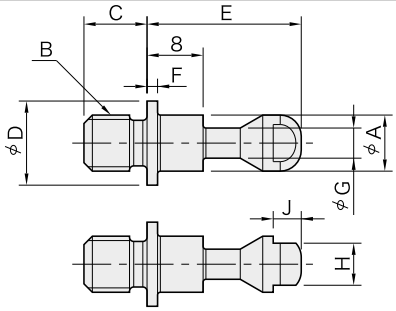

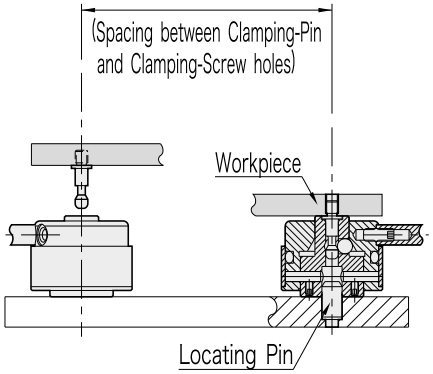

Part Number	A	B	C	D	E	F	G	H	J	Pull Clamps	Weight (g)
51991109	5	M 5x0.8	6	8	17	1.2	3	4	2.5	QLPD150 Series	3
51991110		M 6x1	7								4
51991111	8	M 8x1.25	9	12	22	1.5	4.3	6	4	QLPD200 Series	10
51991112		M10x1.5	11								13

Recommended Spacing Tolerance in Use of Clamping Screws

Custom Clamping Screws (different screw thread sizes) are available on request.

QLPDH PULL CLAMPS(Heavy)

NEW

Body & Clamp ring	
Material	SCM440 steel
Finish	Black oxide
Heat Treat	Quenced and tempered

Handle Shank	
Material	S45C steel
Finish	Black oxide
Heat Treat	Quenced and tempered

Handle	
Material	Plastic
Color	Black

Note) Clamping Pins or Screws must be ordered separately.

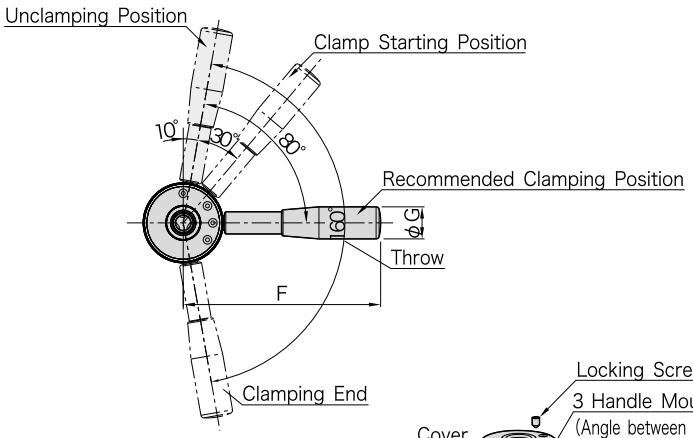

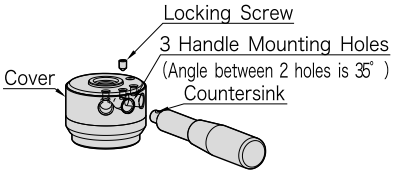

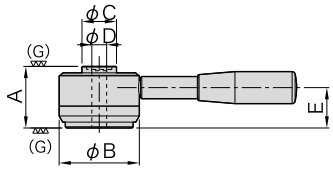

The handle can be removed by loosening the locking screw.
To keep the handle mounted permanently,make sure that the locking screw is fully tightened.
3 options of handle mounting position.

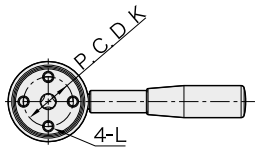

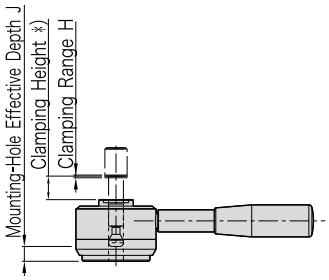

Part number	Series	A (±0.01)	B	C	D (F7)	E	F	G	H	J	K (P.C.D)
51991501	QLPDH 400 R	50	65	28	12	36	160	26	2	10	40
51991502	QLPDH 500 R	63	80	34	16	45	180	28	2.5	12	50

Part number	Series	L	Allowable Operating Load (N) **)	Clamping Force (N)	Clamping Mechanism	Recommended Workpiece Thickness Tolerance ***)	Weight (kg)
51991501	QLPDH 400 R	M 8x1.25 14 deep	600	6,000	Spiral Cam Cam Angle : 4°	±0.5	1.2
51991502	QLPDH 500 R	M10x1.5 18 deep		8,000		±0.8	2.2

*) Grip length of Clamping Pin (workpiece thickness)
**) Allowable load to operate the handle
***) Maintaining these recommended tolerances allows minimizing the variation of handle position in the clamping mode in clamping with the use of the Clamping Pin.

How To Use

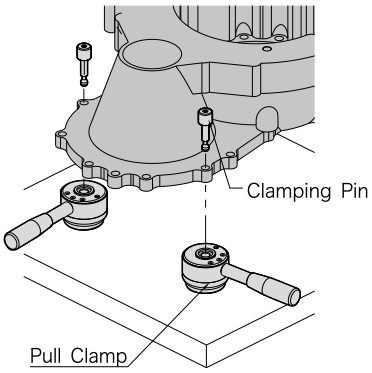

How To Locate Workpiece

1. Basic method

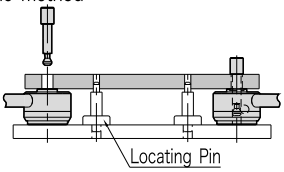

2. Method for clamping and locating a workpiece at a time. Give an accuracy shown below to the hole spacing to generate a locating accuracy of ±0.08.

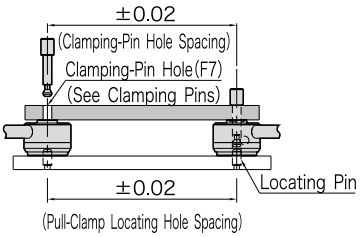

Technical Information

Allowable Loads in Machining of Workpiece Bottom

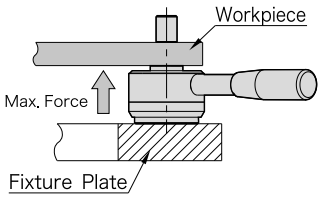

Part Number	Allowable Force To Workpiece Bottom (Per Clamp)
51991501	max. 8000N
51991502	max.14000N

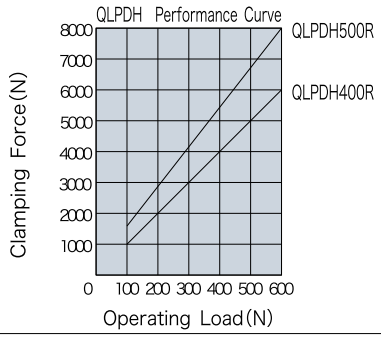

QLPDH-X CLAMPING PINS (Heavy)

NEW

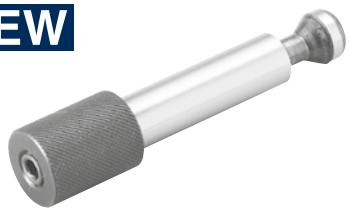

Shank	
Material	SCM435 steel
Finish	Precision ground

Head	
Material	S45C steel
Finish	Black oxide
Heat Treat	Quenched and tempered

C dimension is adjustable by ± 1mm to fit actual workpiece thickness.

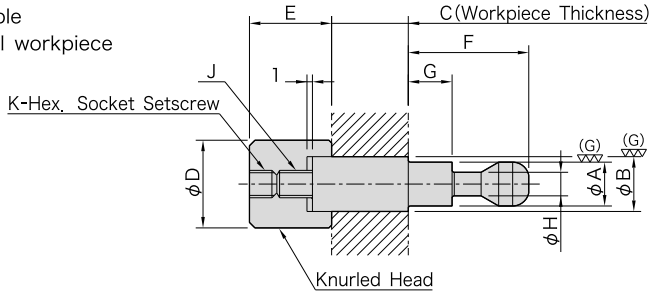

How To Use

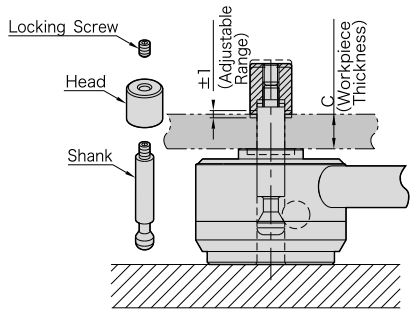

Ordering Example

QLPDH400-12-20.5
Part Number C Dim.

・Custom Clamping Pins (different B dimensions) are available on request.

Part Number	A (f7)	B (f7)	C ＊) (By 0.1mm)	D	E	F	G	H	J	K	Pull Clamps	Weight (g)
51991503-(C Dim. in mm)	12	12	0＜C≦100	18	23	38	21.5	6.5	M 8x1.25	M 8x1.25- 8L	QLPDH400R	70 to 160
51991504-(C Dim. in mm)		16		24								175 to 265
51991505-(C Dim. in mm)	16	16	0＜C≦120	24	29	48	28	9.5	M10x1.5	M10x1.5 -10L	QLPDH500R	160 to 350
51991506-(C Dim. in mm)		20		30								325 to 515

＊)For ordering, specify workpiece thickness.

QLPDH-M CLAMPING SCREWS (Heavy)

NEW

Material	SCM 435
Finish	Black oxide
Heat Treat	Quenched and tempered

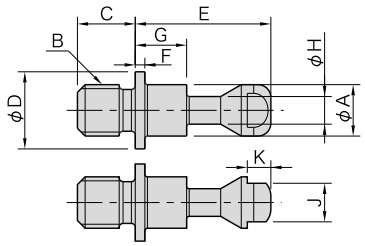

Recommended Spacing Tolerance in Use of Clamping Screws

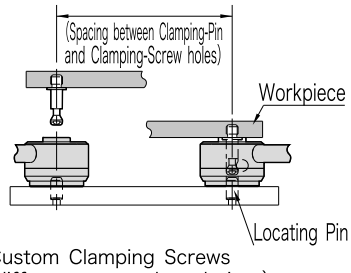

Custom Clamping Screws (different screw thread sizes) are available on request.

Part Number	A	B	C	D	E	F	G	H	J	K	Pull Clamps	Weight (g)
51991507	12	M12x1.75	13	20	38	2	21.5	6.5	10	4	QLPDH400R	40
51991508		M16x2	17									55
51991509	16	M16x2	17	25	48	2.5	28	9.5	13	5	QLPDH500R	90
51991510		M20x2.5	21									110

QLSW SWING CLAMPS(Standard)

With Handle　　Without Handle

Body & Shaft	
Material	SCM440 steel
Finish	Quenched and tempered

Clamp arm & Adaptor Head	
Material	S45C steel
Finish	Quenched and tempered

Handle	
Material	S45C steel
Finish	Black oxide

Ball Knob	
Material	ABS resin
Finish	Black

Counterclockwise Clamping　　Clockwise Clamping

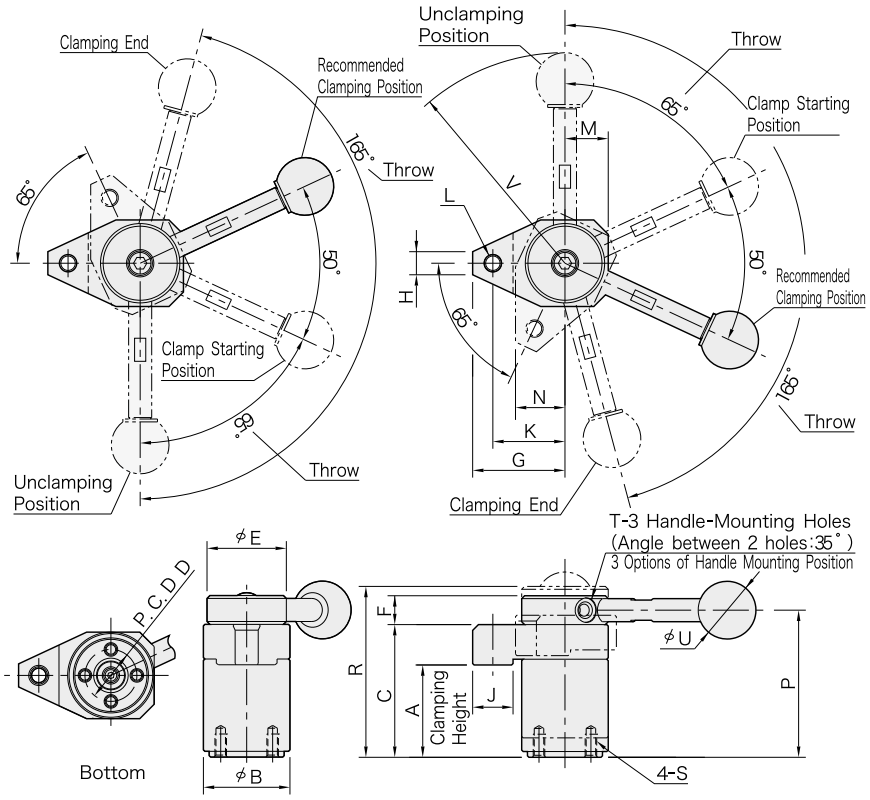

Size/Type	Clamping Direction	A	B	C	D (P.C.D)	E	F	G	H	J	K	L
QLSW150R	Clockwise	32 *)	30	46	18	30	10	32	8	14	25	M6x1
QLSW150L	Counterclockwise											
QLSW200R	Clockwise	45 **)	40	63	25	38	13	40	12	16	32	M8x1.25
QLSW200L	Counterclockwise											

*) Actual clamping height : 31.4 to 32.6 (clamping range :1.2)
**) Actual clamping height : 44.1 to 45.9 (clamping range :1.8)

Size/Type	M	N	P	R	S	T	Clamping Force(N)	Clamping Mechanism
QLSW150R	15	17	51	57.5	M4x0.7 8 deep	M5x0.8	800	Spiral Cam Cam Angle:4°
QLSW150L								
QLSW200R	20	22.5	69.5	78.1	M6x1 12 deep	M6x1	1200	
QLSW200L								

With Handle

Part Number	U	V	Allowable Operating Load (N) ***)	Weight (g)
51991115	20	73	150	320
51991117				
51991116	25	107	200	710
51991118				

***) Allowable load to operate the handle

Without Handle

Part Number	Weight (g)
51991119	295
51991121	
51991120	660
51991122	

Note : The handle must be ordered separately.

How To Use

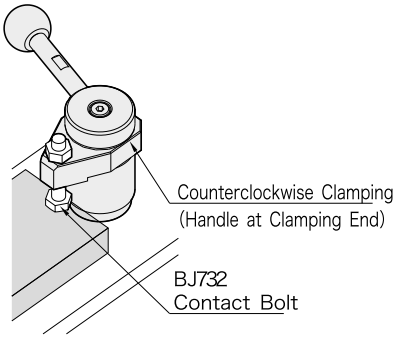

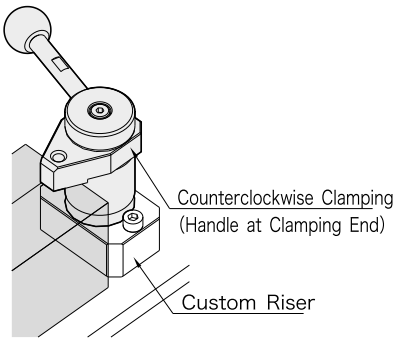

Tip Installation

When installing a tip on the clamp arm, lock the clamp arm using a wrench to prevent the clamp from receiving any torque.

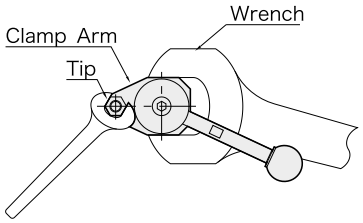

QLSW-SH MACHINABLE CLAMP ARMS FOR STANDARD SWING CLAMPS

NEW

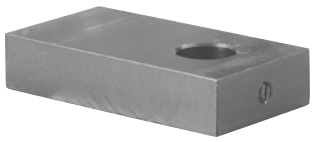

Material: S45C steel
Finish : Black oxide

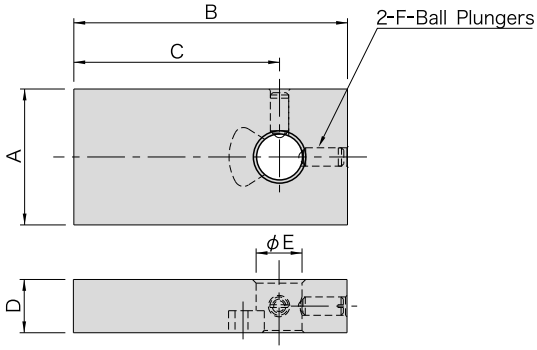

Technical Infomation

Allowable Loads in Machining of Workpiece Bottom

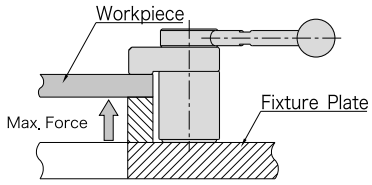

Series	Allowable Force To Workpiece Bottom (Per Clamp)
QLSW150	max.2100N
QLSW200	max.2700N

Clamp Arm Length Vs. Clamping Force

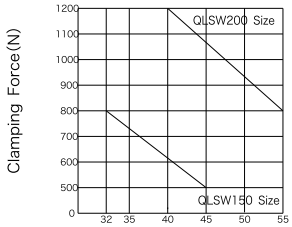

Clamp Arm Length Vs. Strain During Clamping

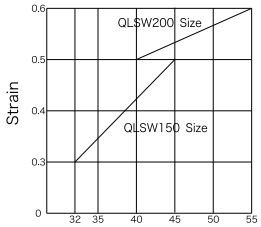

Notes :
- Clamp arm length denotes C dimensions below.
- Clamping force and strain during clamping denote values gained when the max. allowable load is applied to the handle.

How To Use

- Use for clamp arm customization
- Machine to your clamping requirements

(Clamping Height in Use of Machinable Clamp Arms)

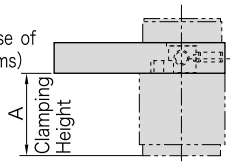

Part Number	A	B	C	D	E (F8)	F	Allowable Weight of Clamping Tip*) (g)	Swing Clamps	Weight (g)
51991513	30	60	45	12	10	M4	100	QLSW150Series	150
51991514	40	75	55	16	16	M5		QLSW200Series	330

*) A clamping tip to mount on the end of the clamp arm must not weigh over 100g.

Part Number	A
51991513	34**)
51991514	47***)

**) Actual clamping height:33.4 to 34.6 (clamping range:1.2)
***) Actual clamping height:46.1 to 47.9 (clamping range:1.8)

QLSWH SWING CLAMPS (Heavy)

NEW

Body/Cam/Handle	
Material	SCM440 steel
Finish	Black oxide
Heat Treat	Quenced and tempered

Spindle	
Material	SCM435 steel
Finish	Black oxide
Heat Treat	Quenced and tempered

Arm/Covering/Handle	
Material	S45C steel
Finish	Black oxide
Heat Treat	Quenced and tempered

Adjustment knob	
Material	S45C steel
Finish	Black oxide

Handle	
Material	Plastic
Color	Black

How To Use

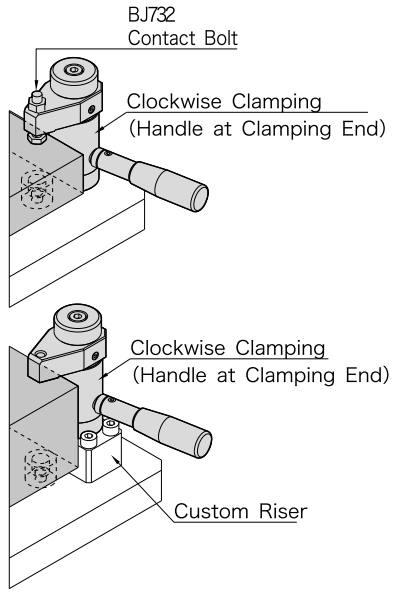

Counterclockwise Clamping

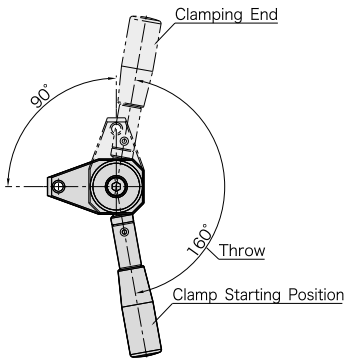

Clockwise Clamping

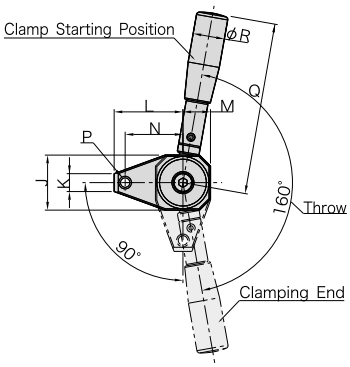

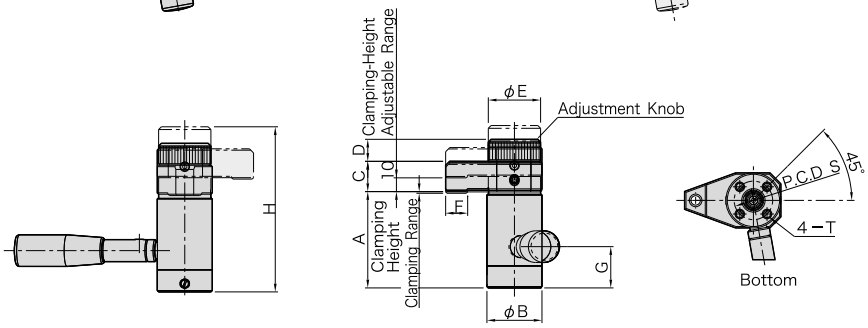

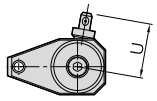

When Handle Is Removed

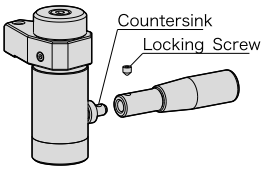

The handle can be removed by loosening the locking screw. To keep the handle mounted permanently, make sure that the locking screw is fully tightened.
3 options of handle mounting position.

Tip Installation

When installing a tip on the clamp arm, lock the clamp arm using a wrench to prevent the clamp from receiving any torque.

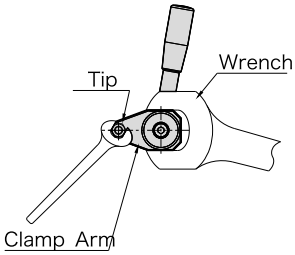

Technical Information

Allowable Loads in Machining of Workpiece Bottom

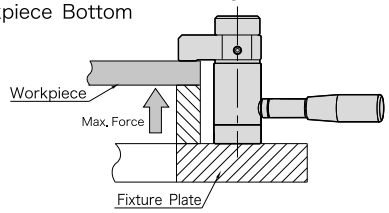

Series	Allowable Force To Workpiece Bottom (Per Clamp)
QLSWH400	max. 8000N
QLSWH500	max.14000N

Part Number	Clamping Direction	Clamping Range	Clamping Height	B	C	D	E	F	G	H	J	K	L	M
51991515	Clockwise	1.2	70 to 80	40	22	16	38	16	30	120	40	13	50	20
51991516	Counter-clockwise													
51991517	Clockwise	1.6	80 to 90	50	25	20	48	24	38	137	50	18	60	25
51991518	Counter-clockwise													

Part Number	N	P	Q	R	S (P.C.D)	T	U	Allowable Oerating Load (N)*)	Clamping Force (N)	Clamping Mechanism	Weight (kg)
51991515	42	M 8x1.25	125	23	28	M6x1 12 deep	39	600	3,500	Spiral Cam Cam Angle 2°	1.1
51991516											
51991517	48	M12x1.75	160	28	35	M8x1.25 16 deep	47	600	6,000		2
51991518											

*) Allowable load to operate the handle

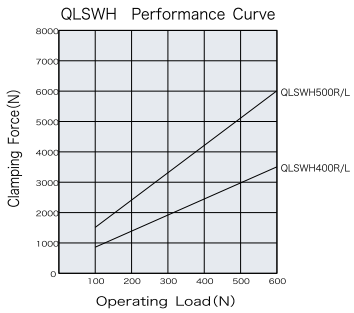

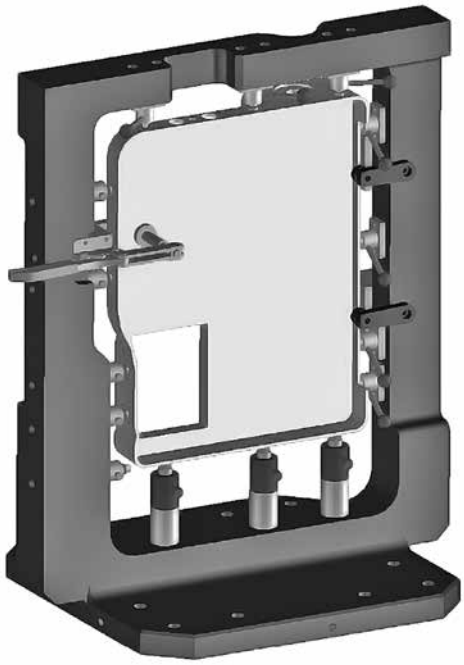

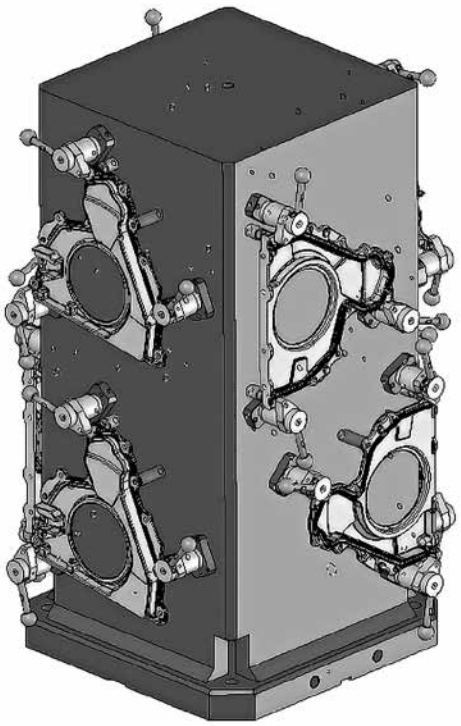

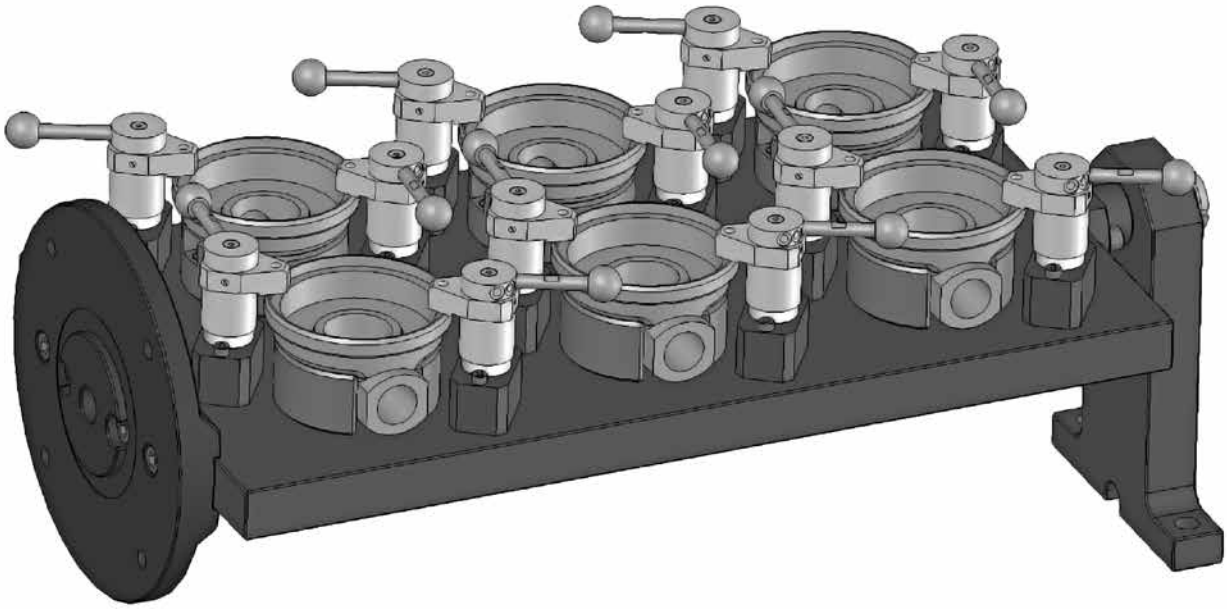

Information on Your Making Custom Clamp Arms for Standard Size of Swing Clamps

Recommeded Dimensions

Series	A (F8)	B	E	F	G	H	J	K	L(Max.) *)	M	N
QLSW150	10	12	5	32	M4x0.7	11	1.5	30	45	15	C5
QLSW200	16	16	6	42	M5x0.8	15	2	40	55	20	C8

*) See page 138 clamping force vs. clamp-arm length

Clamp Arm Installation/Removal Instructions

To install a clamp arm,

1. Fit it onto the shaft getting the stop pin received in the stop-pin slot provided on the clamp-arm bottom.
2. Place the adaptor head onto the shaft getting the shaft fitted into the shaft-receiving pocket in the adaptor head, and then lock the adaptor head using a hex. socket head cap screw.
3. Tighten the ball plungers inside the clamp arm.

To remove the clamp arm, follow the above steps back.

How To Determine D Dimensions

Series	C	D
QLSW150	46	46 - Clamping Height
QLSW200	63	63 - Clamping Height

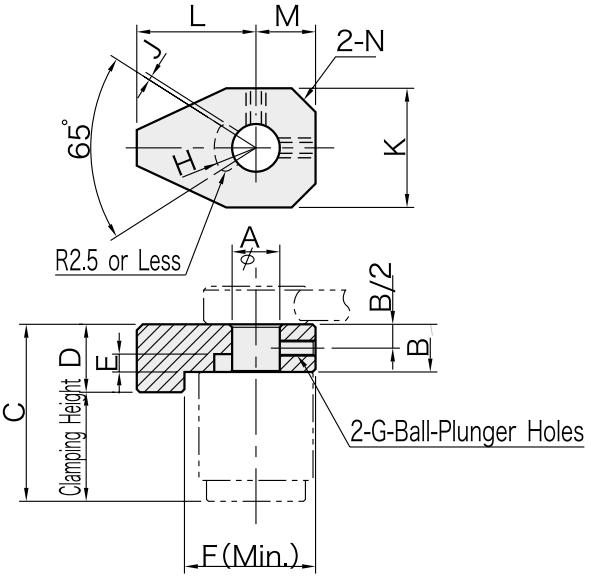

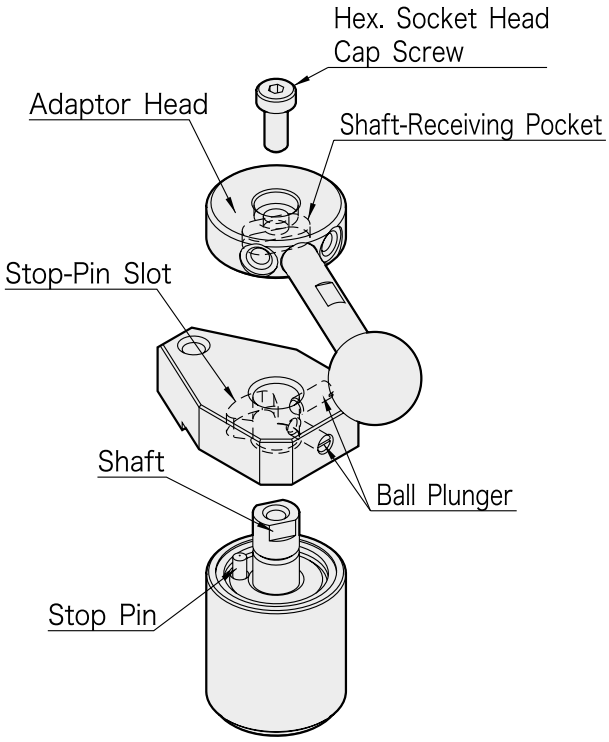

Clamp Arm Customization Examples

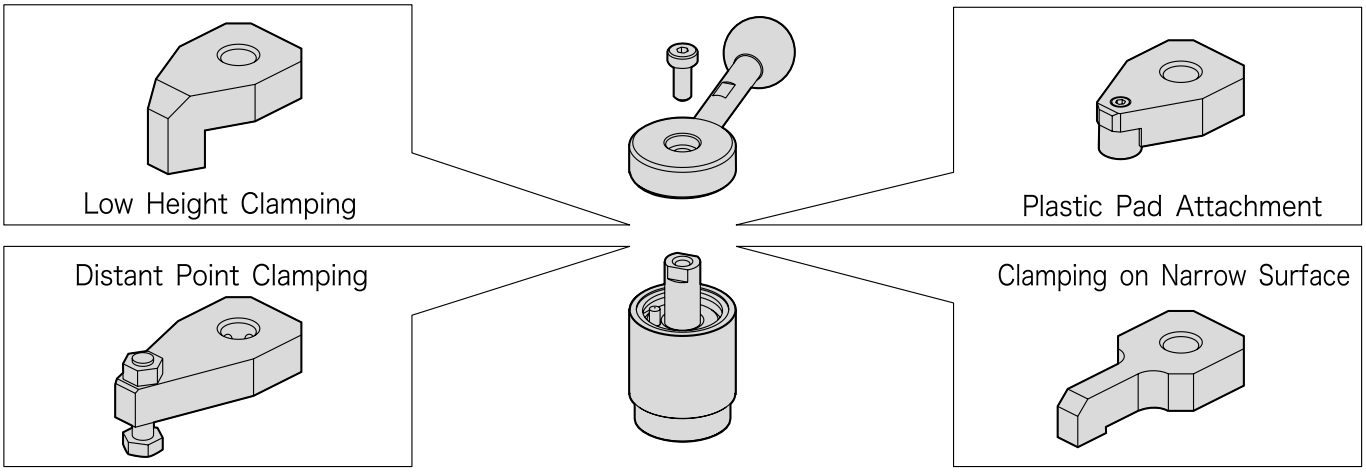

Information on Your Making Custom Clamp Arms for Heavy Size of Swing Clamps

Recommended Dimensions

Series	A (F8)	B	C	D	E (±0.1)	F	G	H	L (Max.)
QLSWH400	32	15	21	13	5	M6x1	20	40	50
QLSWH500	41	19	24	15	6	M8x1.25	25	50	60

Clamp Arm Installation/Removal Instructions

To install a clamp arm,

1. Place the wave washer on the shoulder of the bolt and then fit the clamp arm onto the bolt.
2. Place the adjustment knob onto the bolt getting the bolt fitted into the bolt-receiving pocket in the adjustment knob, and then lock the adjustment knob using a hex. socket head cap screw.
3. Align the countersinks on the side of the holder with the setscrew holes on the side of the clamp arm, and then lock them using the hex. socket setscrews.

To remove the clamp arm, follow the above steps back.

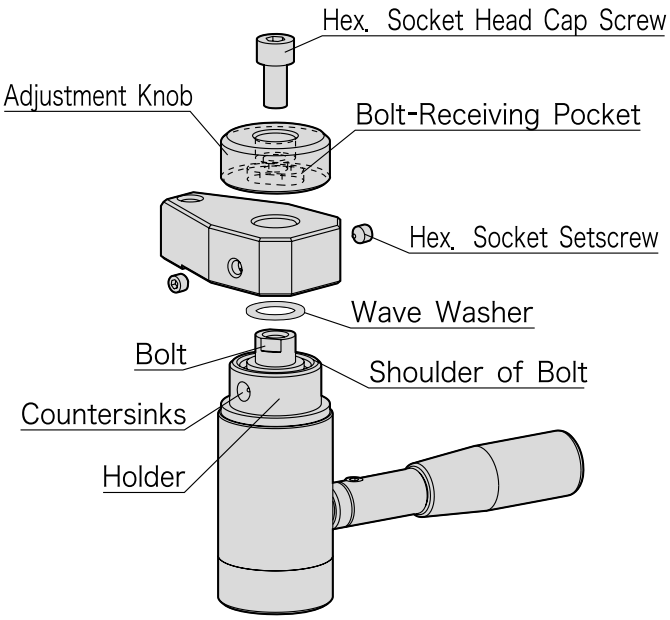

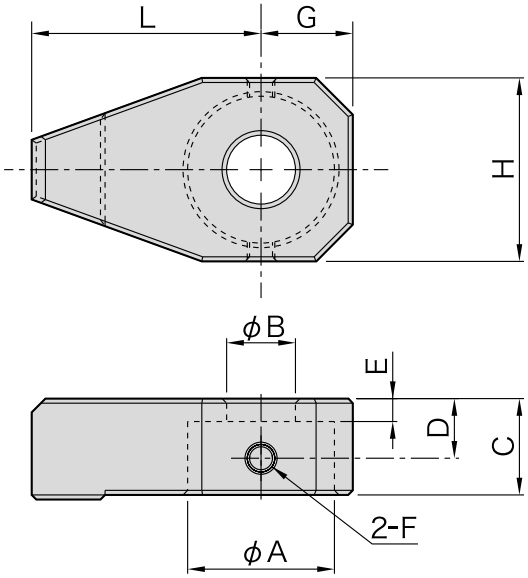

Clamp Arm Customization Examples

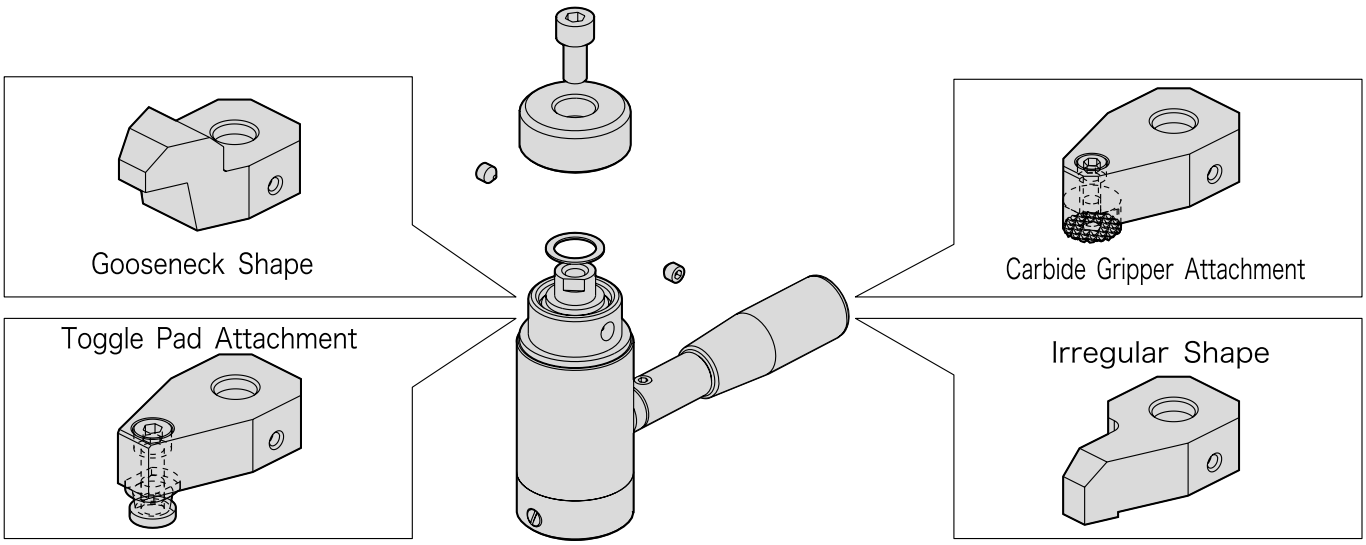

QLSWC SWING CLAMPS (Mini)

NEW

Body / Handle / Spindle	
Material	S45C steel
Finish	Black oxide
Heat treat	Quenched and tempered

Arm / Cam Shaft	
Material	SCM440 steel
Finish	Black oxide
Heat treat	Quenched and tempered

Knob	
Material	Phenolic plastic
Color	Black

Counterclockwise Clamping

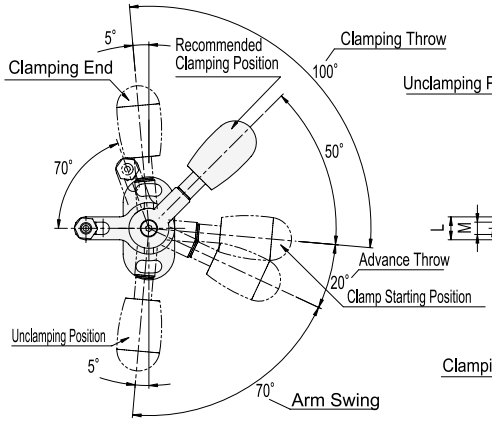

Clockwise Clamping

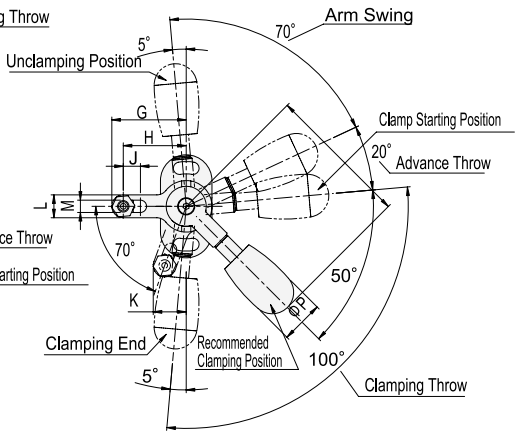

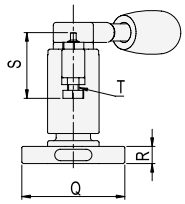

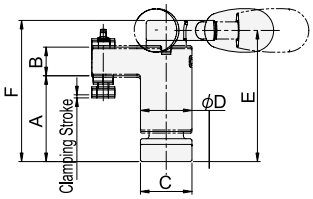

Mounting Holes

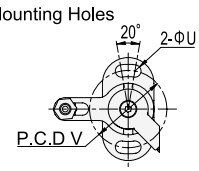

Rough Surface Contact

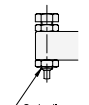

Finished Surface Contact

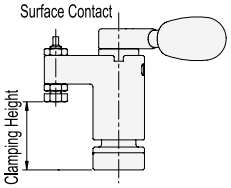

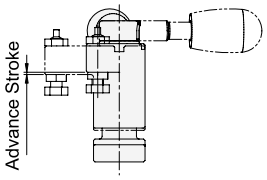

Part Number	Clamping Direction	Clamping Height *)				Clamping Stroke	Advance Stroke
		Finished Surface Contact		Rough Surface Contact			
		Min.	Max.	Min.	Max.		
51991822	Clockwise	22.8	24.8	22.4	24.4	1	0.8
51991823	Counterclockwise	(22.3-23.3)	(24.3-25.3)	(21.9-22.9)	(23.9-24.9)		
51991824	Clockwise	31.3	33.3	32.2	33.3	1.4	1.1
51991825	Counterclockwise	(30.6-32)	(32.6-34)	(31.5-32.9)	(33.5-34.9)		

*) Clamping height can be adjusted. The parenthesised values denote actual clamping height.

Part Number	A	B	C	D	E	F	G	H	J	K	L	M	N	P	Q
51991822	30	10	18	18	45.8	49	26	22	6	11.5	8	4.3	50	15	36
51991823															
51991824	40	14	23	23	61.3	66	35	30	8	15.3	10	5.3	63	20	45
51991825															

Part Number	R	S	T	U	V	W	Allowable Operating Load (N) **)	Clamping Force (N)	Clamping Mechanism	Weight (g)
51991822	6	22.8	M4×0.7	4.3	27	8	100	1,100	Spiral Cam Cam Angle:5°	112
51991823										
51991824	8	28.5	M5×0.8	5.3	34	10	150	1,800		250
51991825										

**) Allowable load to operate the handle

How To Operate

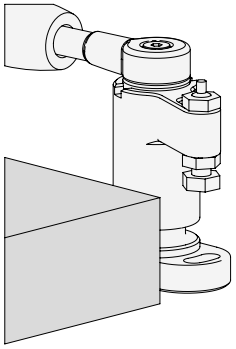

1. Unclamped
Load a workpiece.

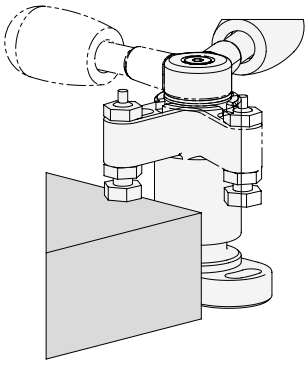

2. Arm Swing
Turn the handle to set the arm in position.

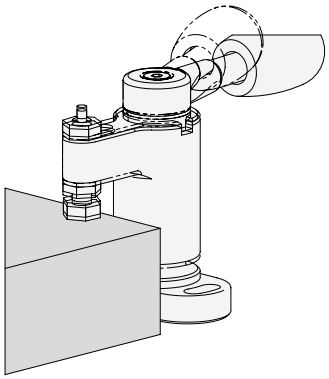

3. Clamping Setup
Continue turning the handle to set the spindle close to the workpiece.

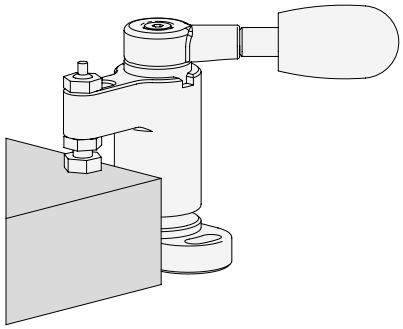

4. Clamping
Turn the handle to the recommended clamping position.

Performance Curve

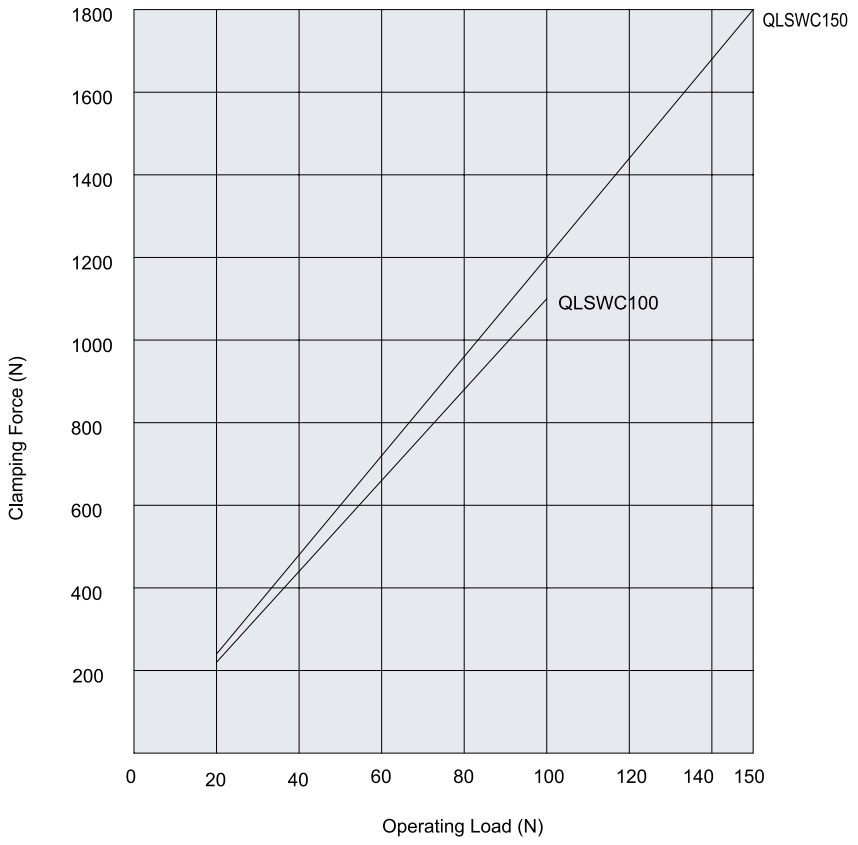

Technical Information

Allowable Loads in Machining of Workpiece Bottom

Ensure that any force more than stated below is not applied.

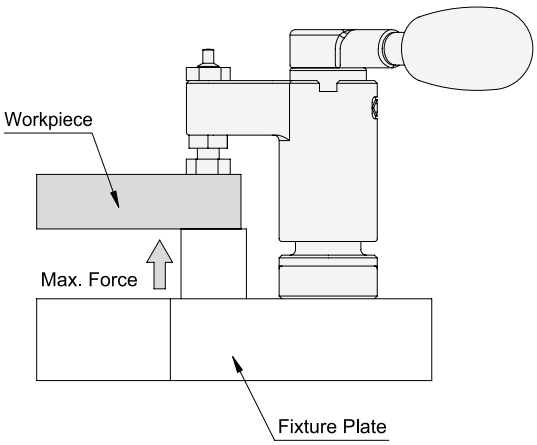

Series	Allowable Force to Workpiece Bottom (per Clamp)
QLSWC100	max.2,300N
QLSWC150	max.3,600N

How To Operate

How To Change Handle Position

The dodecagonal socket in the hub of the handle allows changing the handle operating angle by 30°.

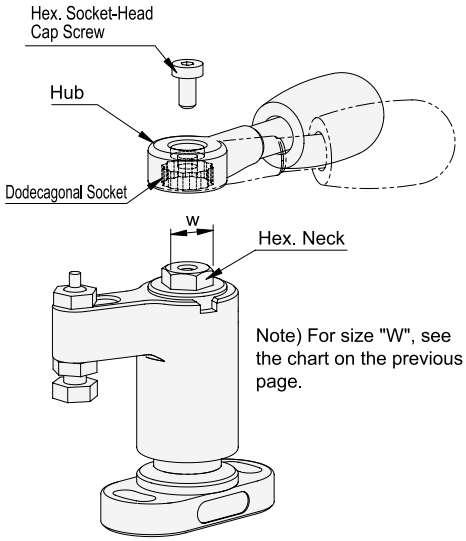

Note) For size "W", see the chart on the previous page.

How To Release Locked Handle

When turned beyond the clamping end, the handle will be locked with a click. The locked handle can be released by following the instructions below.

When the spindle is not installed,

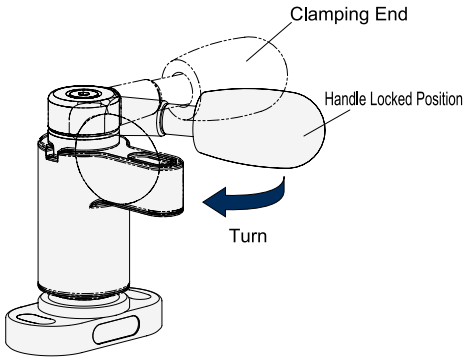

Turn the handle beyond the locked position until another click is made.

When the spindle is installed,

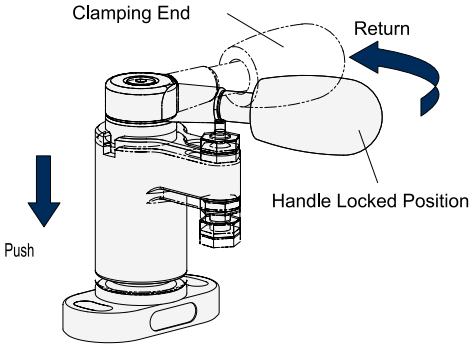

Lower the arm at the handle locked position and then return the handle keeping the arm lowered.

QLSWC SWING CLAMPS (Mini) WITH CAM HANDLE

NEW

Body / Washer / Spindle	
Material	S45C steel
Finish	Black oxide
Heat treat	Quenched and tempered

Arm / Cam Shaft / Handle	
Material	SCM440 steel
Finish	Black oxide
Heat treat	Quenched and tempered

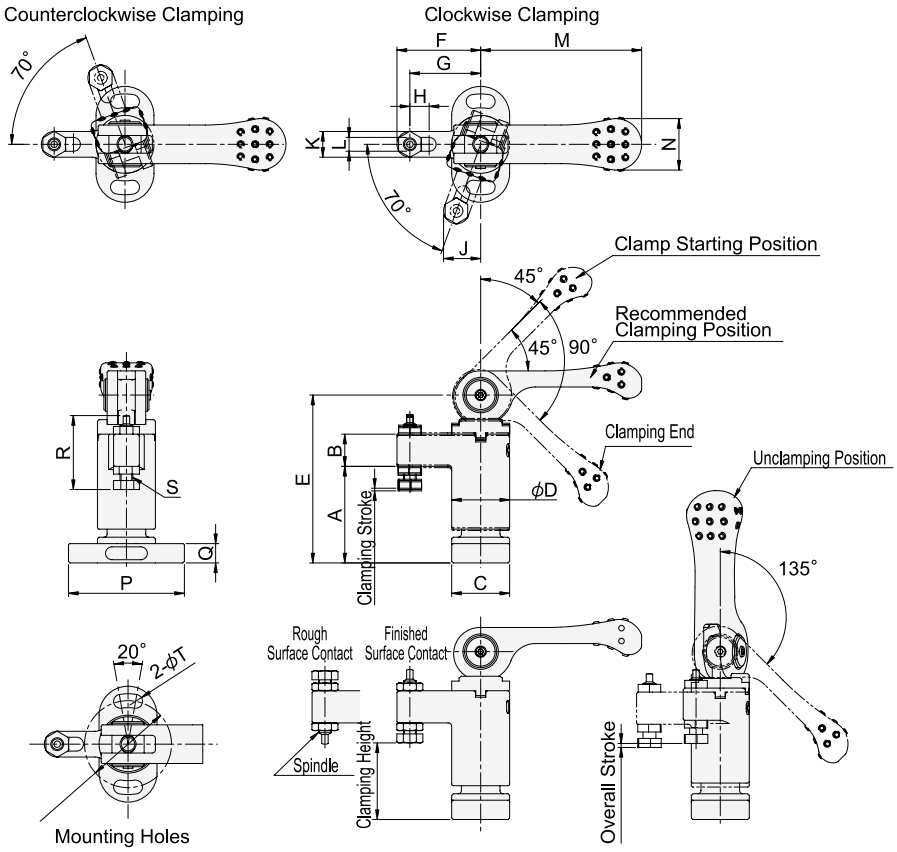

Part Number	Clamping Direction	Clamping Height *)				Clamping Stroke	Overall Stroke
		Finished Surface Contact		Rough Surface Contact			
		Min.	Max.	Min.	Max.		
51991826	Clockwise	22.8	24.8	22.4	24.4	0.8	1.2
51991827	Counterclockwise	(22.4-23.2)	(24.4-25.2)	(22-22.8)	(24-24.8)		
51991828	Clockwise	31.3	33.3	32.2	34.2	1	1.5
51991829	Counterclockwise	(30.8-31.8)	(32.8-33.8)	(31.7-32.7)	(33.7-34.7)		

*) Clamping height can be adjusted. The parenthesised values denote actual clamping height.

Part Number	A	B	C	D	E	F	G	H	J	K	L	M	N	P	Q
51991826	30	10	18	18	52	26	22	6	11.5	8	4.3	50	15	36	6
51991827															
51991828	40	14	23	23	68	35	30	8	15.3	10	5.3	63	20	45	8
51991829															

Part Number	R	S	T	U	Cam Handles Part Number	Allowable Operating Load (N) **)	Clamping Force (N)	Clamping Mechanism	Weight (g)
51991826	22.8	M4×0.7	4.3	27	QLCA-05	100	800	Spiral Cam Cam Angle:4°	134
51991827									
51991828	28.5	M5×0.8	5.3	34	QLCA-06	150	1,500		272
51991829									

**) Allowable load to operate the handle

How To Operate

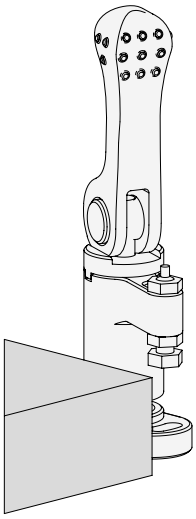

1. Unclamped
Load a workpiece.

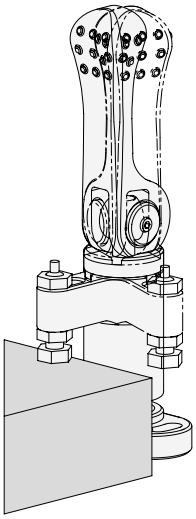

2. Arm Swing
Turn the handle to set the arm in position.

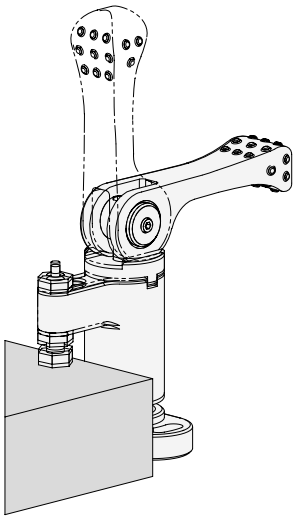

3. Clamping
Set the handle down to clamp the workpiece.

Performance Curve

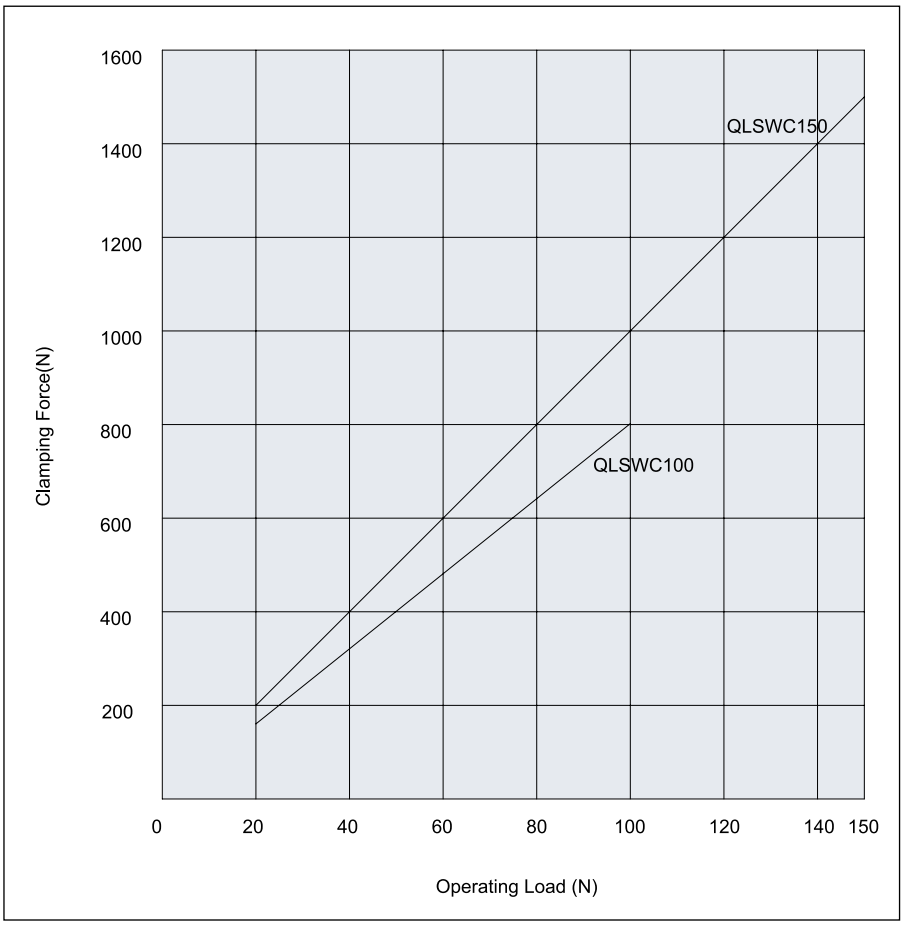

Technical Information

Allowable Loads in Machining of Workpiece Bottom

Ensure that any force more than stated below is not applied.

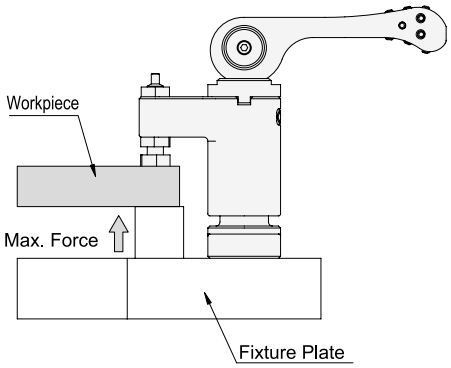

Series	Allowable Force to Workpiece Bottom (per Clamp)
QLSWC100	max.2,300N
QLSWC150	max.3,600N

QLSWC SWING CLAMPS (Mini) FOR TORQUE CONTROL

NEW

Body / Washer / Flange Nut / Spindle	
Material	S45C steel
Finish	Black oxide
Heat treat	Quenched and tempered

Arm	
Material	SCM440 steel
Finish	Black oxide
Heat treat	Quenched and tempered

- Designed for clamping-force control with a torque wrench
- Screw clamping mechanism allows for longer clamping stroke and greater clamping force.

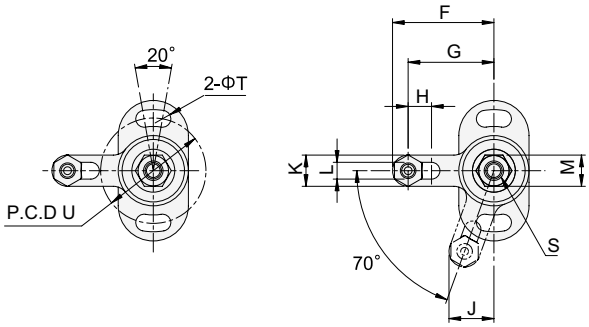

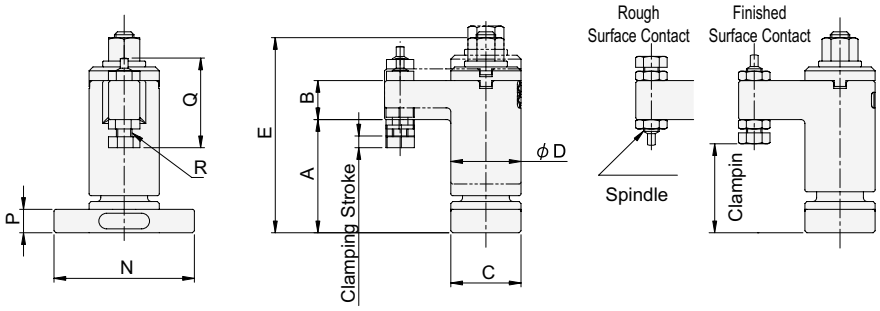

How To Operate

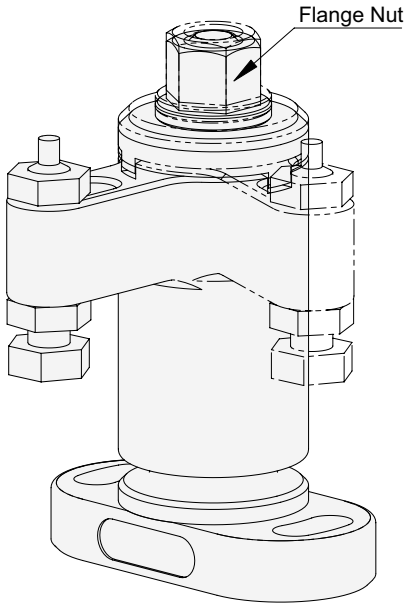

Turning the flange nut allows the arm to swing into position for clamping.

Warning

Do not use a power tool(impact wrench etc.) to turn the flange nut, for damage prevention.

Part Number	Clamping Height *)				Clamping Stroke	A	B	C	D	E
	Finished Surface Contact		Rough Surface Contact							
	Min.	Max.	Min.	Max.						
51991830	22.8 (22.8-25.8)	24.8 (24.8-27.8)	22.4 (22.4-25.4)	24.4 (24.4-27.4)	3	29	10	18	18	52.5
51991831	31.3 (31.3-35.3)	33.3 (33.3-37.3)	32.2 (32.2-36.2)	34.2 (34.2-38.2)	4	39	14	23	23	69.5

*) Clamping height can be adjusted. The parenthesised values denote actual clamping height.

Part Number	F	G	H	J	K	L	M	N	P	Q
51991830	26	22	6	11.5	8	4.3	8	36	6	22.8
51991831	35	30	8	15.3	10	5.3	10	45	8	28.5

Part Number	R	S	T	U	Clamping Force(N)	Allowable Screw Torque (N.m)	Weight (g)
51991830	M4×0.7	M5×0.8	4.3	27	2,300	6	94
51991831	M5×0.8	M6×1	5.3	34	3,600	10	210

Performance Curve

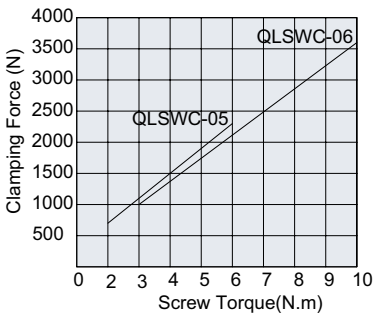

Fixturing with Swing Clamps(Mini)

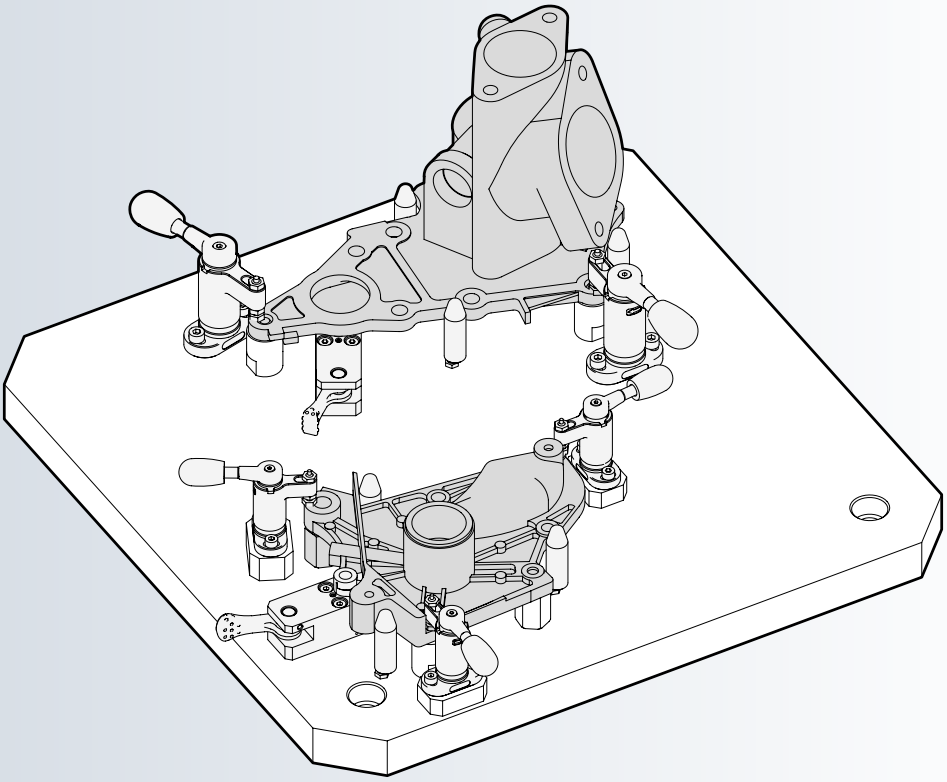

Fixturing with Swing Clamps(Mini) with Cam Handle

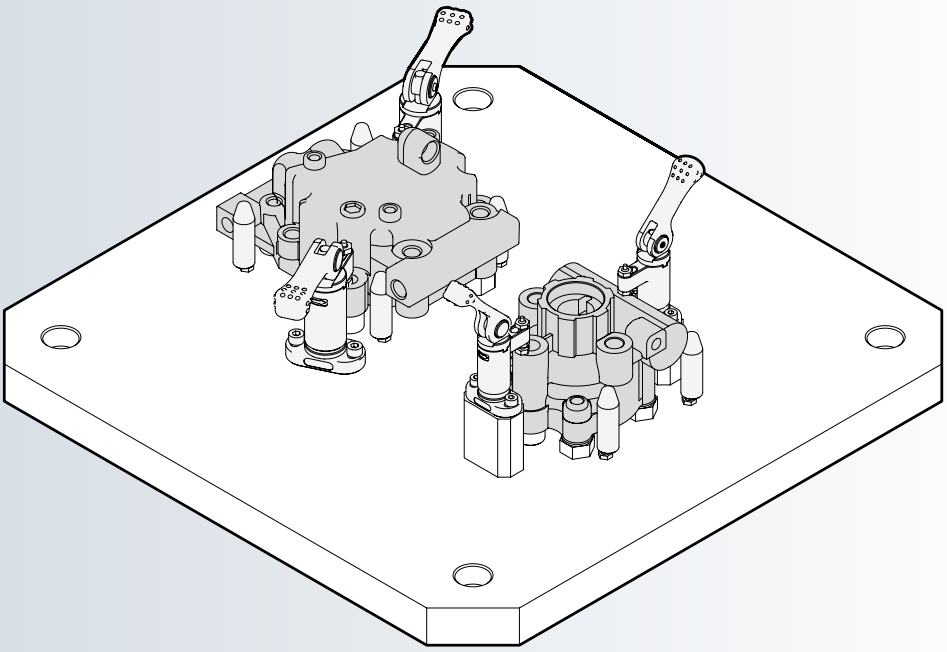

QLRE RETRACTABLE CLAMPS (Mini) WITH CAM HANDLE

NEW

Body / Spindle	
Material	S45C steel
Finish	Black oxide
Heat treat	Quenched and tempered

Arm / Joint	
Material	SCM435 steel
Finish	Black oxide
Heat treat	Quenched and tempered

Cam Handle	
Material	SCM440 steel
Finish	Black oxide
Heat treat	Quenched and tempered

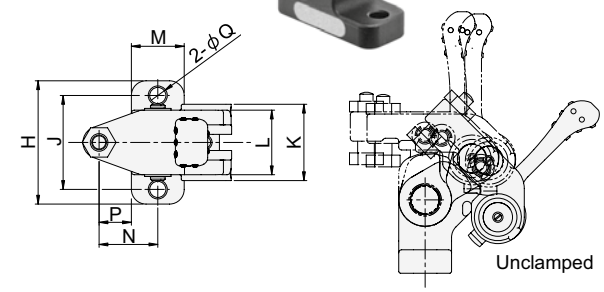

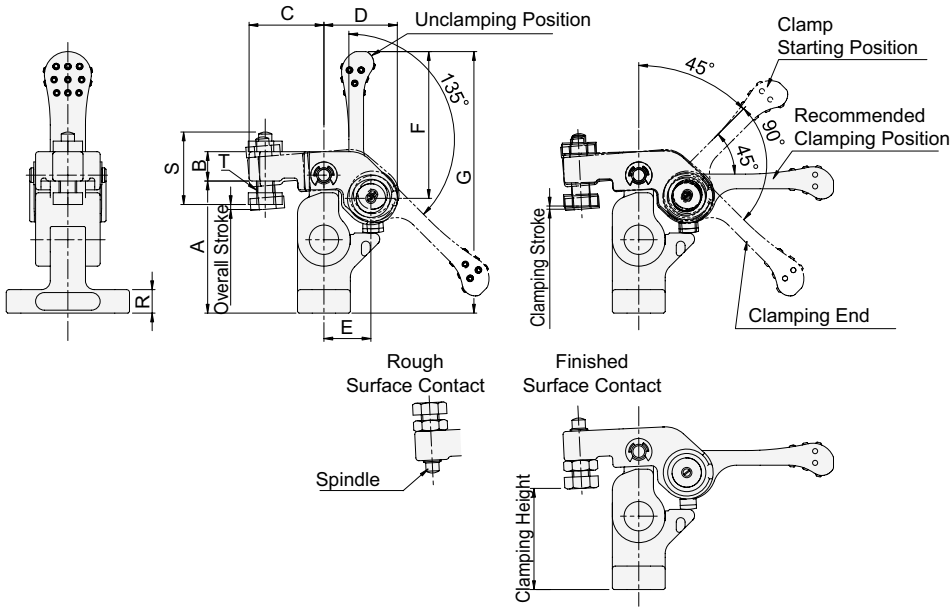

Part Number	Clamping Height *)				Clamping Stroke	Overall Stroke
	Finished Surface Contact		Rough Surface Contact			
	Min.	Max.	Min.	Max.		
51991832	32 (31.5-32.5)	40 (39.5-40.5)	35 (34.5-35.5)	43 (42.5-43.5)	1	1.5
51991833	37 (36.4-37.6)	48 (47.4-48.6)	42 (41.4-42.6)	53 (52.4-53.6)	1.2	1.8

*) Clamping height can be adjusted. The parenthesised values denote actual clamping height.

Part Number	A	B	C	D	E	F	G	H	J	K	L	M	N	P	Q
51991832	45	10	25.5	25	16	50	89	42	32	26	22	18	20	11	5.5
51991833	55	12	32	31	20	63	109	52	40	32	28	22	25	14	6.6

Part Number	R	S	T	Cam Handles Part Number	Allowable Operating Load (N) **)	Clamping Force(N)	Clamping Mechanism	Weight (g)
51991832	8	24	M6×1	QLCA-05	100	700	Spiral Cam Cam Angle:4°	244
51991833	10	30.5	M8×1.25	QLCA-06	150	1,100		468

**) Allowable load to operate the handle

How To Operate

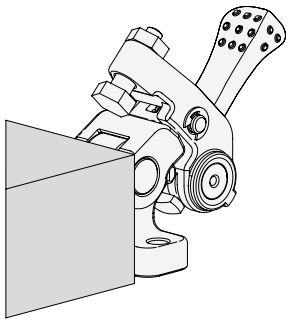

1. Unclamped
Load a workpiece.

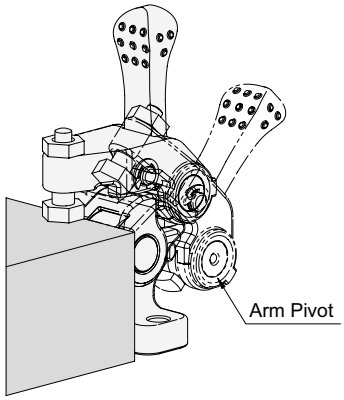

2. Clamping Setup
Set the arm in clamping position holding it at the arm pivot.

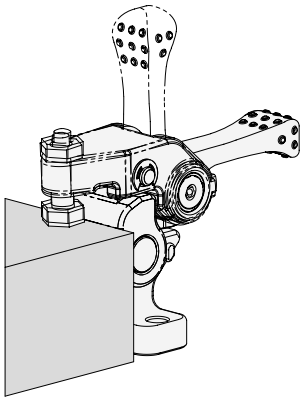

3. Clamping
Set the handle down to clamp the workpiece.

For unclamping, follow the above steps back.

Performance Curve

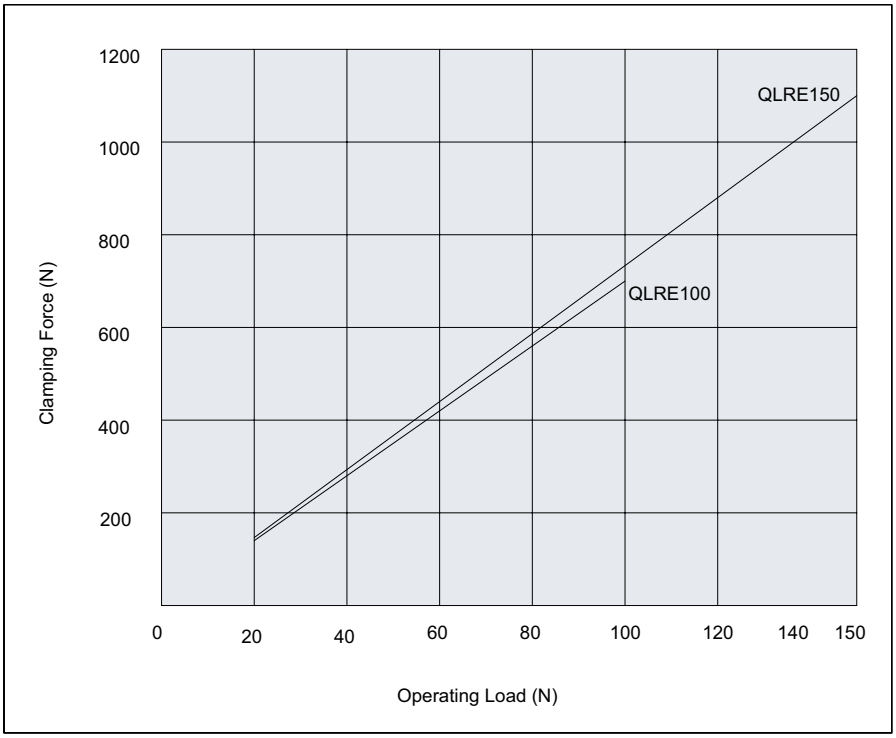

Technical Information

Allowable Loads in Machining of Workpiece Bottom

Ensure that any force more than stated below is not applied.

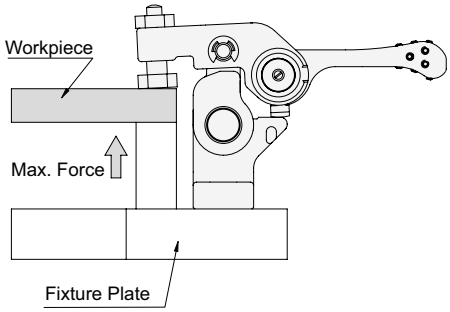

Part Number	Allowable Force to Workpiece Bottom (per Clamp)
51991832	max.5,000N
51991833	max.6,000N

APPLICATION EXAMPLES

Fixturing with Retractable Clamps (Mini) with Cam Handle

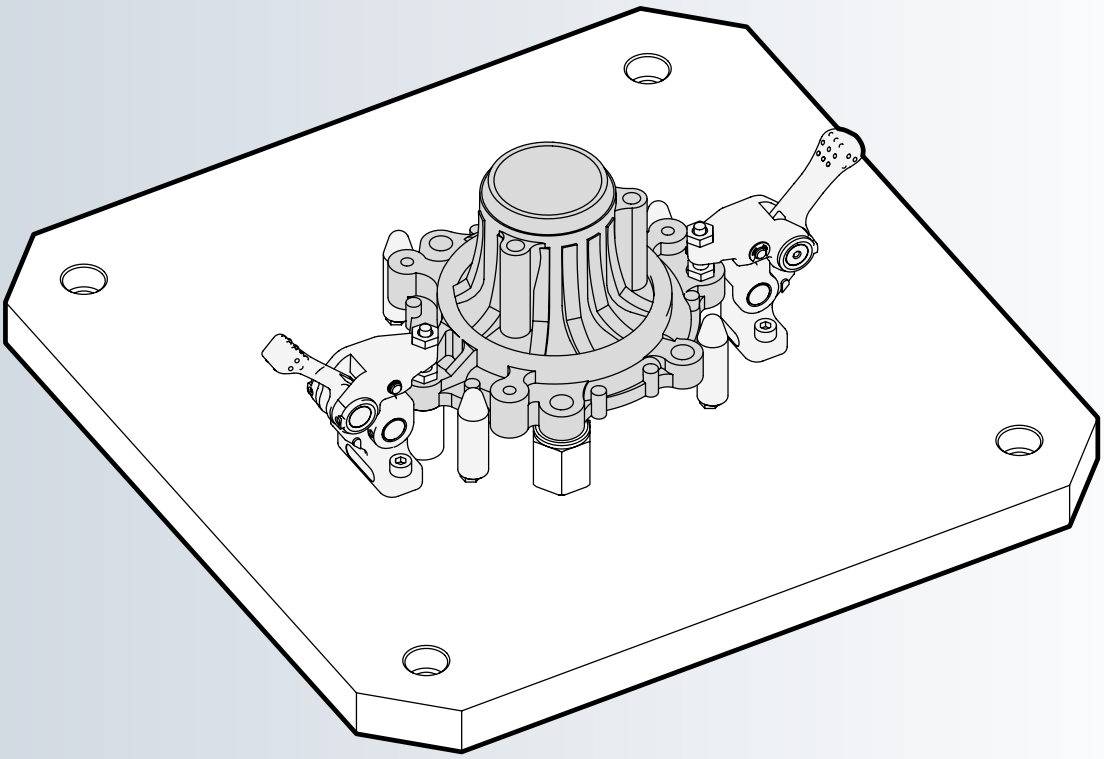

QLRE

RETRACTABLE CLAMPS (Mini) WITH ADJUSTABLE HANDLE

NEW

Body / Spindle	
Material	S45C steel
Finish	Black oxide
Heat treat	Quenched and tempered

Arm / Joint	
Material	SCM435 steel
Finish	Black oxide
Heat treat	Quenched and tempered

- Screw clamping mechanism allows for longer clamping stroke and greater clamping force.

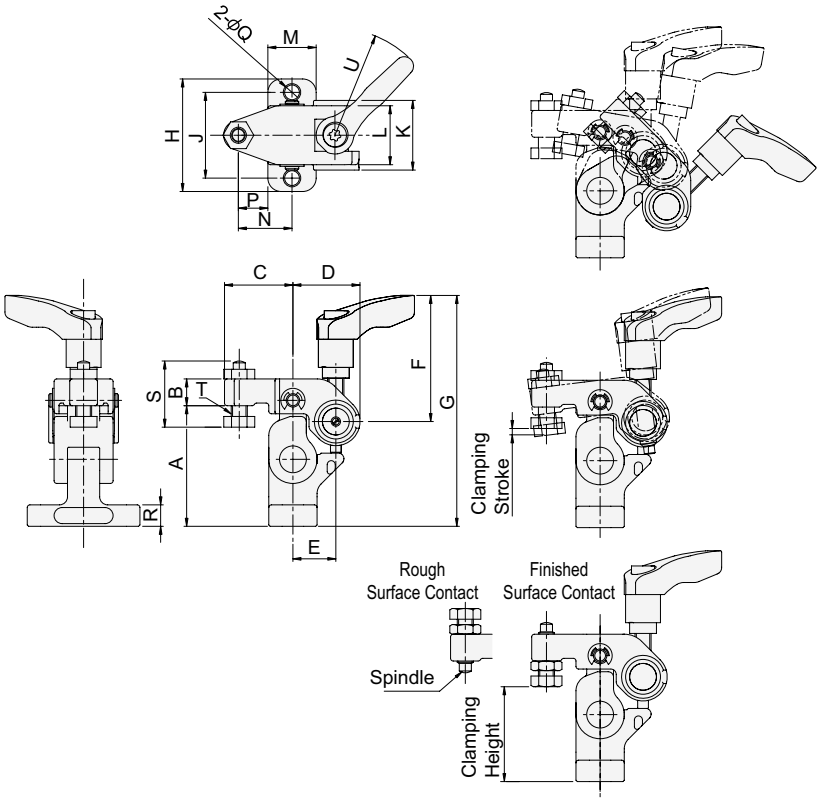

Part Number	Clamping Height *)				Clamping Stroke	A	B	C	D	E
	Finished Surface Contact		Rough Surface Contact							
	Min.	Max.	Min.	Max.						
51991834	32 (32-29.5)	40 (40-37.5)	35 (35-32.5)	43 (43-40.5)	2.5	45	10	25.5	25	16
51991835	37 (37-33.5)	48 (48-44.5)	42 (42-38.5)	53 (53-49.5)	3.5	55	12	32	31	20

*) Clamping height can be adjusted. The parenthesised values denote actual clamping height.

Part Number	F	G	H	J	K	L	M	N	P	Q
51991834	47	86	42	32	26	22	18	20	11	5.5
51991835	63	109	52	40	32	28	22	25	14	6.6

Part Number	R	S	T	U	Adjustable Handles	Allowable Operating Load (N) **)	Clamping Force(N)	Clamping Mechanism	Weight (g)
51991834	8	24	M6×1	40	FKF6-BR	170	2,400	Screw	242
51991835	10	30.5	M8×1.25	65	FKF8-BR	210	4,200		490

**) Allowable load to operate the handle

How To Operate

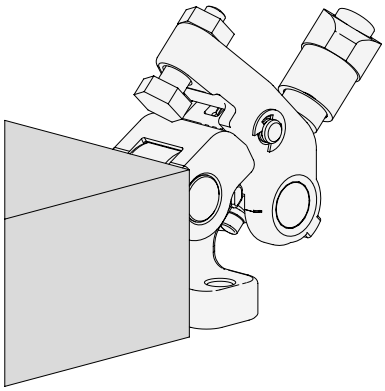

1. Unclamped
Load a workpiece.

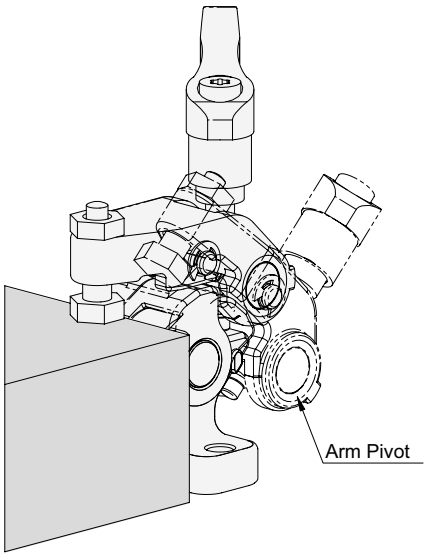

2. Clamping Setup
Set the arm in clamping position holding it at the arm pivot.

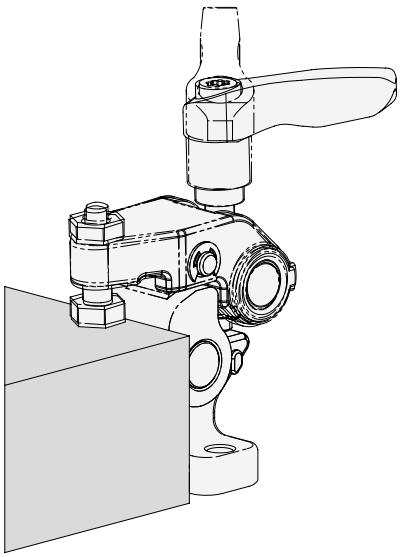

3. Clamping
Set the handle down to clamp the workpiece.

For unclamping, follow the above steps back.

Performance Curve

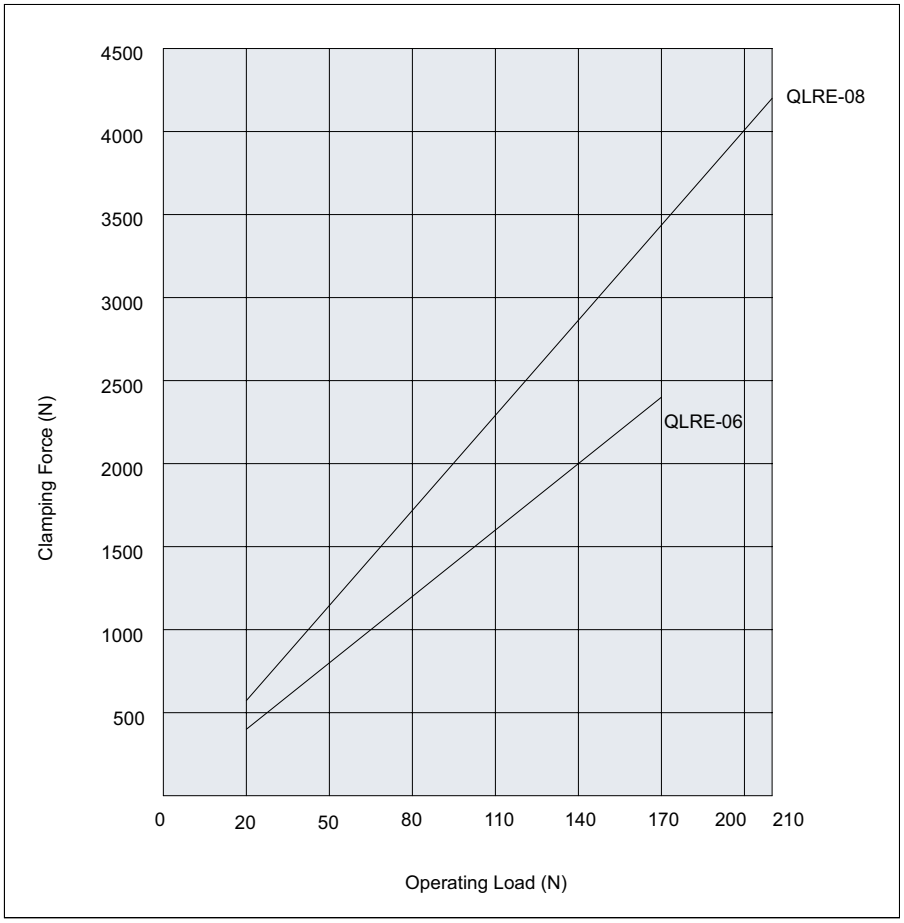

Technical Information

Allowable Loads in Machining of Workpiece Bottom

Ensure that any force more than stated below is not applied.

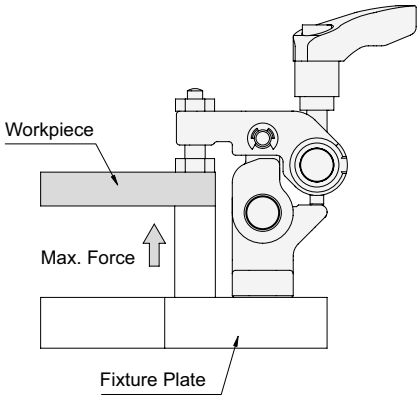

Part Number	Allowable Force to Workpiece Bottom (per Clamp)
QLRE-06	max.5,000N
QLRE-08	max.6,000N

APPLICATION EXAMPLES

Fixturing with Retractable Clamps (Mini) with Adjustable Handle

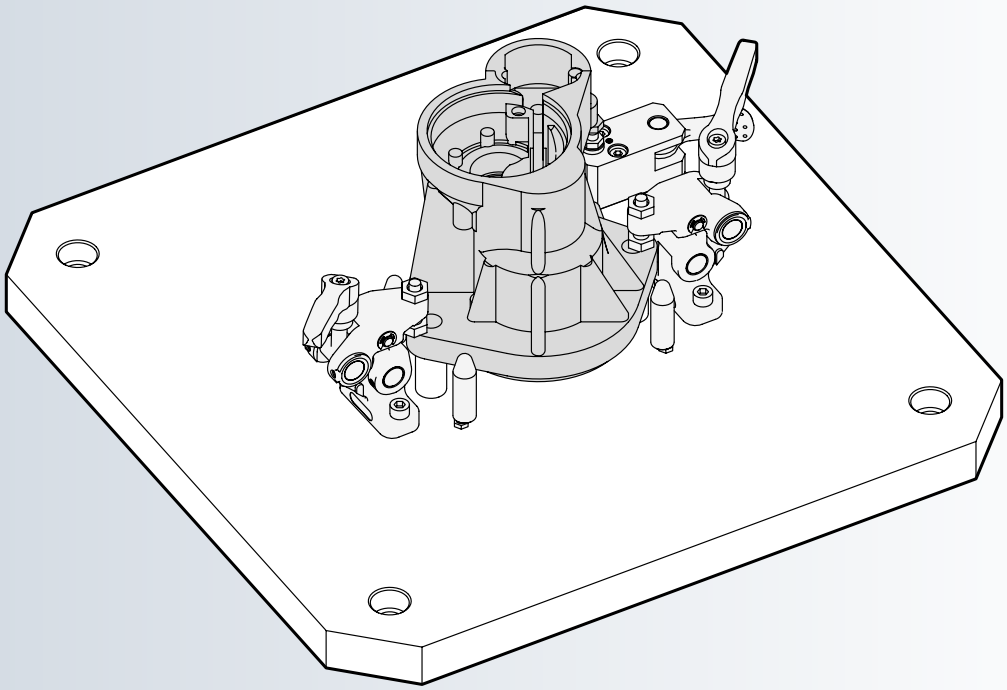

BJ352 WORK SUPPORT WITH CAM HANDLE

NEW

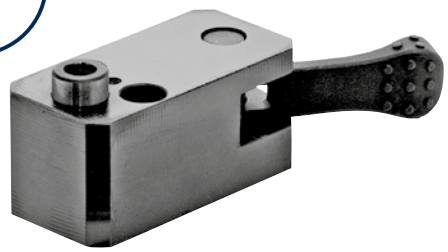

Body	
Material	S45C steel
Finish	Black oxide

Piston	
Material	SK4 steel
Finish	Black oxide
Heat treat	Quenched and tempered

Locking Pin	
Material	S45C steel
Finish	Black oxide
Heat treat	Quenched and tempered

Handle	
Material	SCM440 steel
Finish	Black oxide
Heat treat	Quenched and tempered

・The clamping direction can easily be changed.

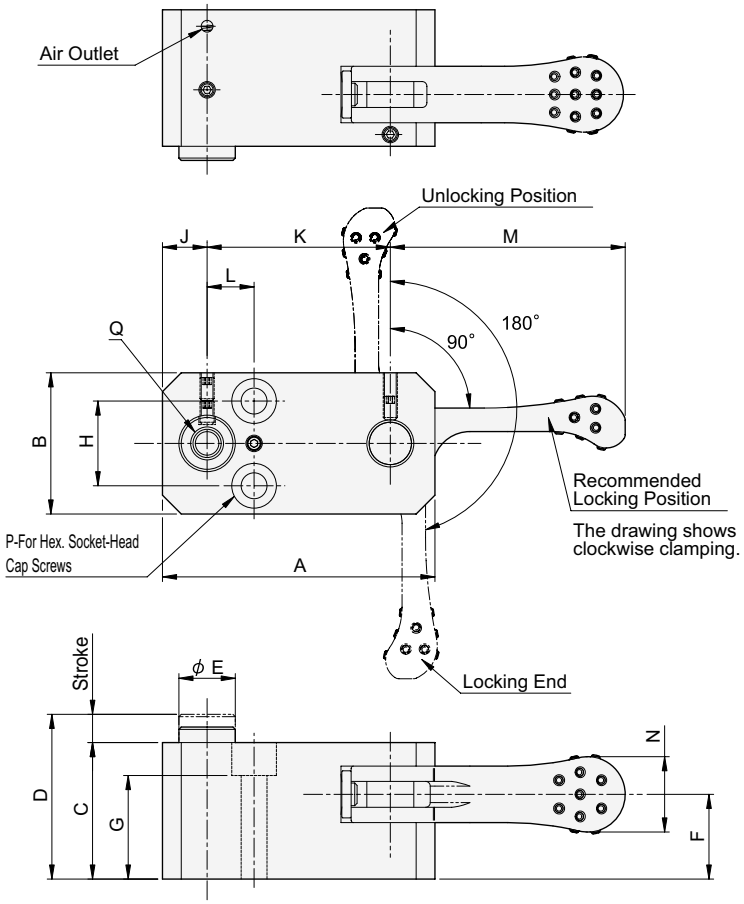

Part Number	A	B	C	D	E	F	G	H	J	K	L	M	N
51991836	52	25	24	29	10	14	19	15	8	36	8	40	14
51991837	58	30	29	35	12	18	22	18	9.5	39	10	50	16
51991838	75	38	37	45	16	23	25	24	12	51	12	63	19
51991839	85	45	42	52	19	26	30	28	14.5	56	15	80	24

Part Number	P	Q	Cam Handles Part Number	Allowable Operating Load (N) *)	Support Capacity (N)	Piston Spring Force (N)	Locking Mechanism	Weight (g)
51991836	M4	M5×0.8 8 deep	QLCA-04	80	500	0-6	Spiral Cam Cam Angle: 4°	213
51991837	M5	M6×1 10 deep	QLCA-05	100	700	0-6		335
51991838	M6	M8×1.25 15 deep	QLCA-06	150	900	0-7		738
51991839	M8	M10×1.5 15deep	QLCA-08	200	1,200	1-11		1,110

*) Allowable load to operate the handle

How To Operate

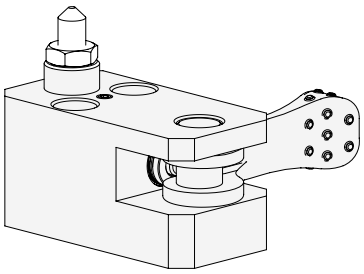

1. Unlocked
No workpiece loaded

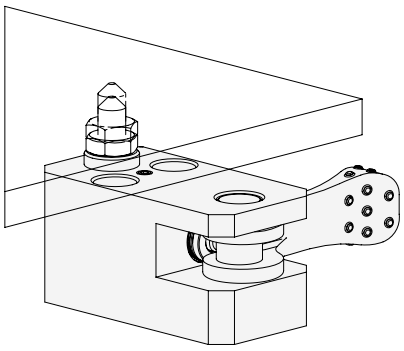

2. Workpiece Loading
Load a workpiece, and the piston lowers.

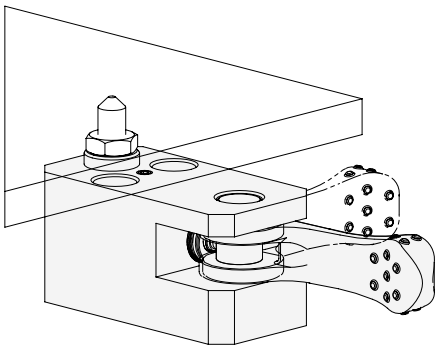

3. Clamping
Turn the handle to lock the piston.

Adjusting Handle Locking Position

Ensure before use that the handle comes to the recommended position when the piston is locked, by adjusting the height of a support tip.

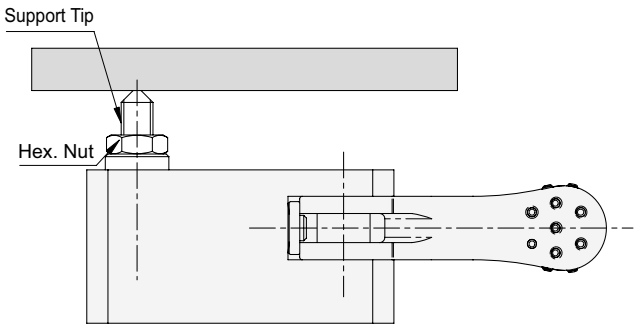

Changing Clamping Direction

Loosen the hex. socket setscrew to remove the retaining pin. Turn the handle upside down and put it in position again.

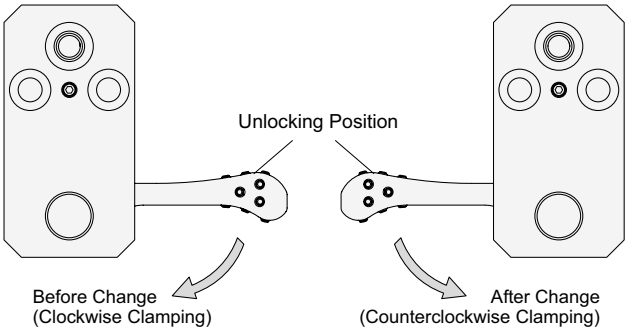

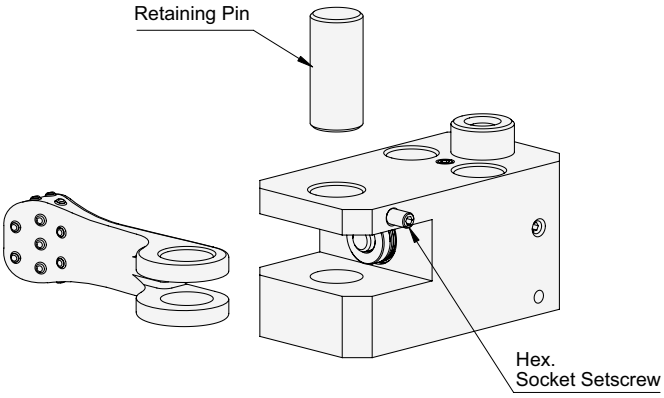

The built-in disc spring prevents loosened locking.

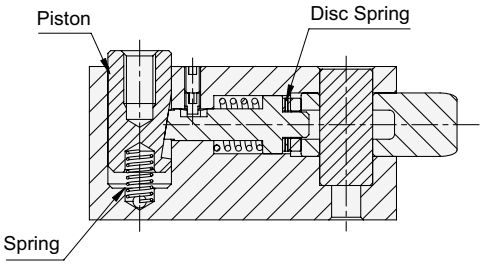

QLST MARKER PLATES

Material: Aluminum

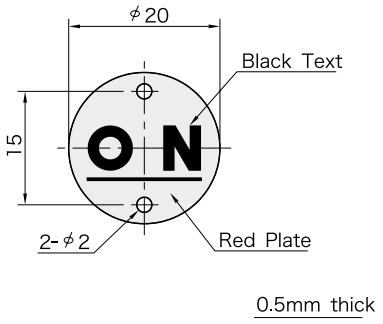

Pressure sensitive adhesive on the backside.
Two 2mm-dia. holes allow for riveting.

How To Use

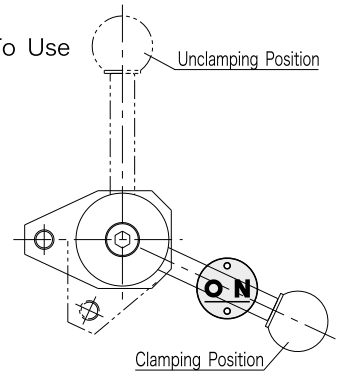

Use to mark the handle position in the clamping mode.

Part Number
51991147

QLCA CAM HANDLES

NEW

Lever	
Material	SCM440 steel
Finish	Black oxide
Heat treat	Quenched and tempered

Ring Nut / Washer	
Material	S45C steel
Finish	Black oxide
Heat treat	Quenched and tempered

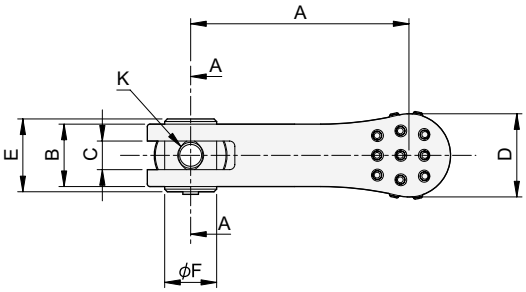

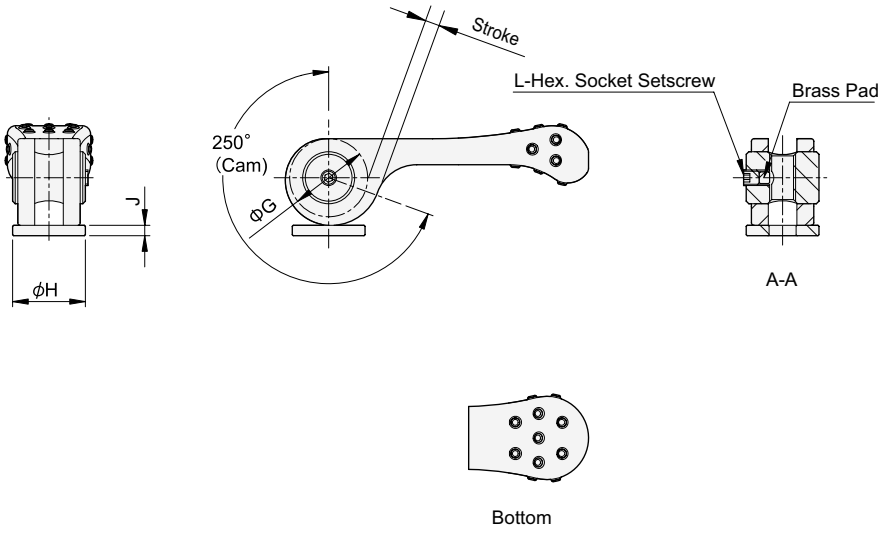

Installing the cam handle

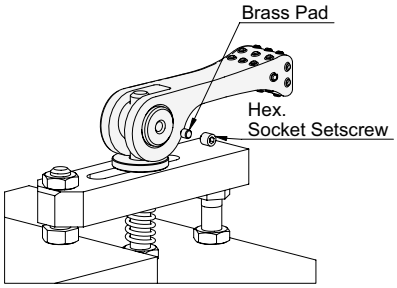

Use a brass pad and a hex. socket setscrew included.

Application Example

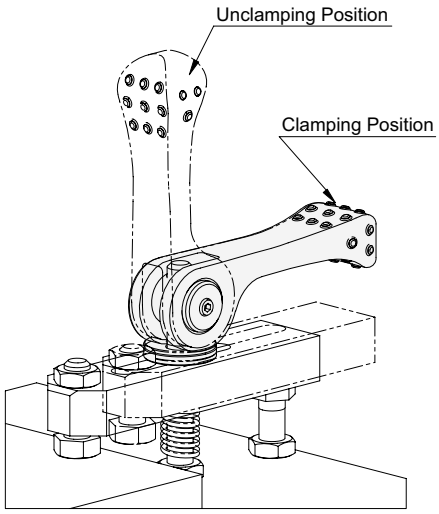

Part Number	A	B	C	D	E	F	G	H	J
51991858	40	10	4.5	14	12	8	12	12	2
51991859	50	12	5.5	16	14	10	15	14	2
51991860	63	14	6.5	19	16	12	18	16	3
51991861	80	18	9	24	20	15	22	20	3

Part Number	K	L	Stroke	Allowable Operating Load (N) *)	Clamping Force(N)	Clamping Mechanism	Weight (g)
51991858	M4×0.7	M3×0.5−3L	1.8	80	900	Spiral Cam Cam Angle:4°	26
51991859	M5×0.8	M3×0.5−3L	2.3	100	1,300		46
51991860	M6×1	M4×0.7−4L	2.7	150	2,600		80
51991861	M8×1.25	M4×0.7−4L	3.3	200	4,000		154

*) Allowable load to operate the handle

QLSC SIDE CLAMPS(Standard)

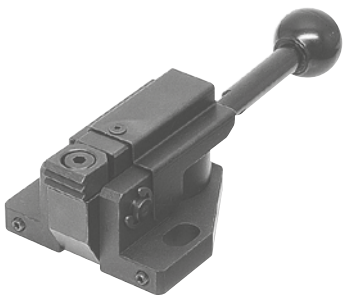

With Handle

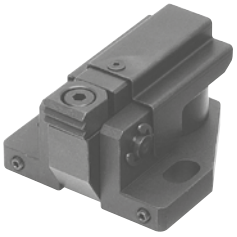

Without Handle

Base	
Material	S45C steel
Finish	Quenched and tempered

Jaws	
Material	SKH51 steel
Finish	Quenched and tempered

Cam	
Material	SK4 steel
Finish	Quenched and tempered

Handle	
Material	S45C steel
Finish	Black oxide

Ball Knob	
Material	ABS resin
Finish	Black

How To Use

The long mounting holes allow adjusting the clamping range. Tightening the hex. socket setscrews in the base front allows preventing the clamp from sliding back in the clamping mode.

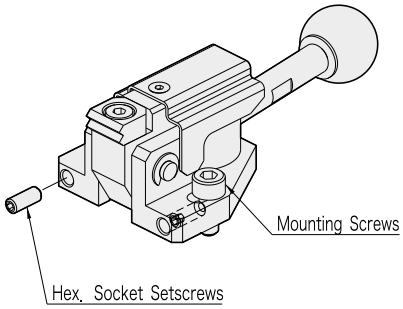

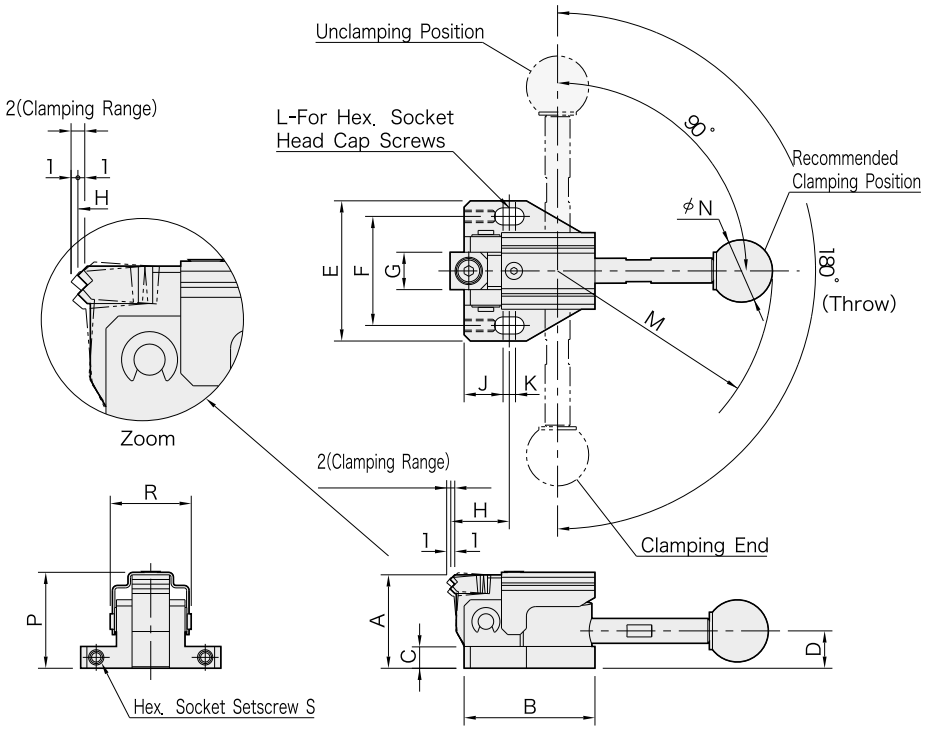

Dimensions of Jaw Base

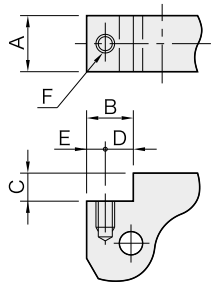

Size	A	B	C	D	E	F
QLSC150	12	10	6	6	4	M4x0.7 7 deep
QLSC200	16	14.5	10	8	6.5	M6x1 9 deep

Jaw Customization

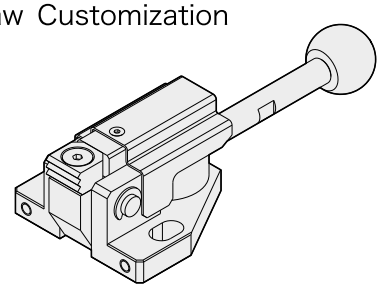

Size	A	B	C	D	E	F	G	H	J	K	L	P
QLSC150	30	42	7	12	45	35	12	19	12.5	4	M5	31
QLSC200	40	62	10	16	65	50	16	28	18.5	5	M8	41

Size	R	S	Clamping Force(N)	Clamping Mechanism
QLSC150	26	M4x0.7-10L	3000	Spiral Cam Cam Angle:4°
QLSC200	38	M4x0.7-15L	4000	

Wide Serrated Jaw

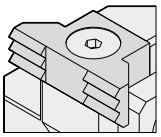

Edged Jaw

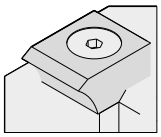

Pointed Jaw

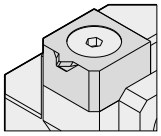

With Handle

Part Number	M	N	Allowable Operating Load (N) ⁎)	Weight (g)
51991125	69	20	150	210
51991126	104	25	200	580

⁎) Allowable load to operate the handle

Without Handle

Part Number	Weight (g)
51991127	185
51991128	530

Note: The handle must be ordered separately.

QLPU PUSH CLAMPS(Standard)

With Handle

Without Handle

Cam	
Material	SK4 steel
Finish	Quenched and tempered

Piston	
Material	S45C steel
Finish	Quenched and tempered

Handle	
Material	S45C steel
Finish	Black oxide

Ball Knob	
Material	ABS resin
Finish	Black

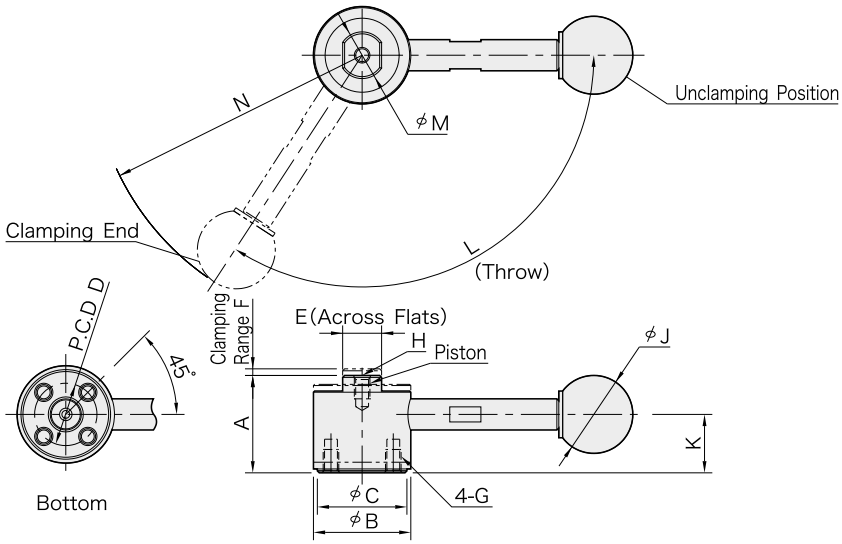

Series	A	B	C	D (P.C.D)	E	F	G	H	K	L	M	Clamping Force(N)	Clamping Mechanism
QLPU150	25	25	23	16	10	1.7	M4x0.7 6 deep	M4x0.7 6 deep	15	123°	12	3000	Spiral Cam Cam Angle:4°
QLPU200	32	32	30	20	13	2.5	M6x1 9 deep	M6x1 9 deep	19.5	135°	15	4000	

With Handle

Part Number	J	N	Allowable Operating Load (N) *)	Weight (g)
51991129	20	69.5	150	180
51991130	25	103	200	370

*) Allowable load to operate the handle

Without Handle

Part Number	Weight (g)
51991131	150
51991132	310

Note: The handle must be ordered separately.

Application Examples

Downthrust Clamping

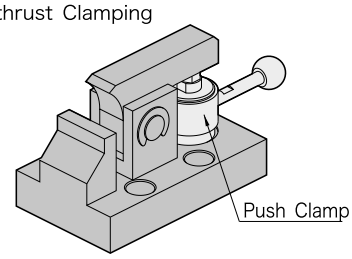

Downward Clamping

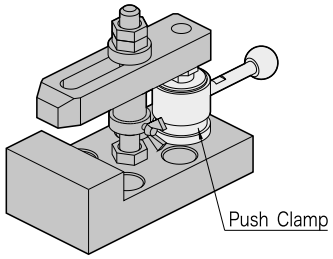

Sideways Clamping

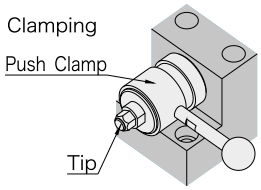

When installing a tip on the piston, lock the piston using a wrench to prevent the clamp from receiving any torque.

Note : See page 151 and 154 for performance curves.

QLSL STANDARD HANDLES

QLSL
Screw-In Handles

Handle	
Material	S45C steel
Finish	Black oxide

Ball Knob	
Material	ABS resin
Finish	Black

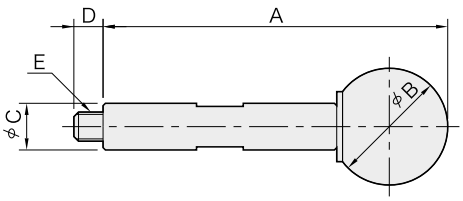

QLSL-RL
Plug-In Handles

Handle	
Material	S45C steel
Finish	Black oxide

Ball Knob	
Material	ABS resin
Finish	Black

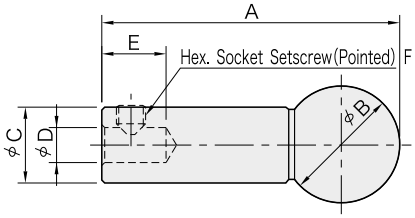

QLSL-RA
Plug-In Handles
adaptors

Material	SCM440 steel
Finish	Quenched and tempered

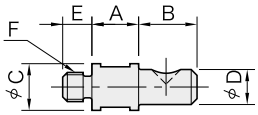

How To Use

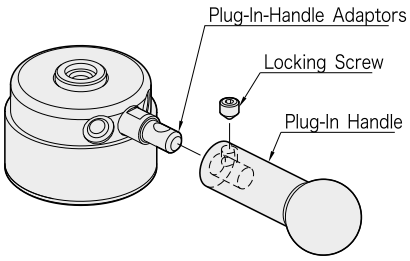

Secure the Plug-In Handle to the Adaptor using the locking screw if necessary.

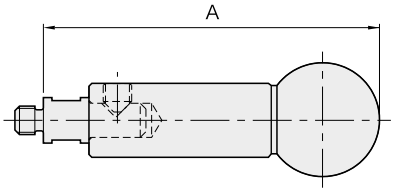

Plug-In Handle Coupled with the Adaptor

Size	A
QLSL150	59
QLSL200	89

QLSL (Screw-in Handles)

Part Number	A	B	C	D	E	Weight (g)
51991135	59	20	8	5	M5x0.8	30
51991136	89	25	10	6	M6x1	60

QLSL-RL(Plug-In Handles)

Part Number	A	B	C	D	E	F	Weight (g)
51991137	51	20	13	6	11	M5x0.8-5L	45
51991138	79	25	15	8	13	M6x1 -6L	90

QLSL-RA(Plug-In-Handle Adaptors)

Part Number	A	B	C	D	E	F	Weight (g)
51991139	8	10	8	6	5	M5x0.8	7
51991140	10	12	10	8	6	M6x1	14

Performance Curves

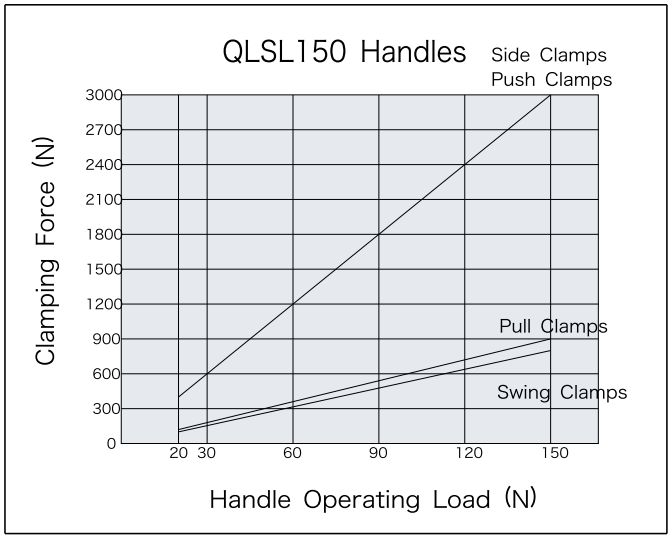

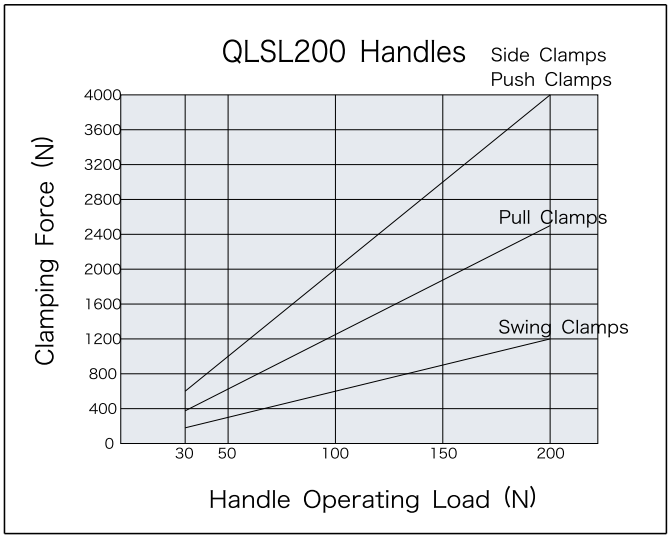

QLTL ADJUSTABLE-TORQUE HANDLES

QLTL(Screw-In Handles)

QLTL-RL(Plug-In Handles)

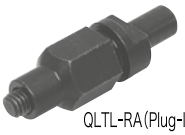

QLTL-RA(Plug-In-Handle Adaptors)

Stem	
Material	SCM440 steel
Finish	Quenched and tempered

Lockin nut	
Material	S45C steel
Finish	Black oxide

Handle	
Material	S45C steel
Finish	Quenched and tempered

QLTL(Screw-In Handles)

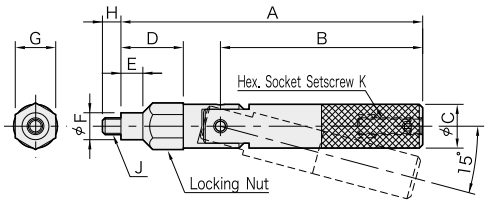

QLTL-RL(Plug-In Handles)

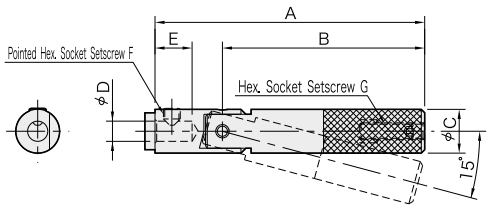

QLTL-RA(Plug-In-Handle Adaptors)

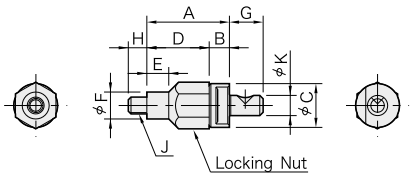

How To Use

Turning the setscrew inside the handle allows adjusting the torque to set a desired clamping force.

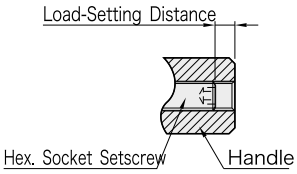

[Operating-Load Setting Range]

QLTL120/QLTL120-RL : 30N to 120N
QLTL160/QLTL160-RL : 50N to 160N

Note : Ensure that the operating load is not set below the lower limit to prevent the handle from returning to the unclamping position due to shock load generated during the transfer of machine pallets.

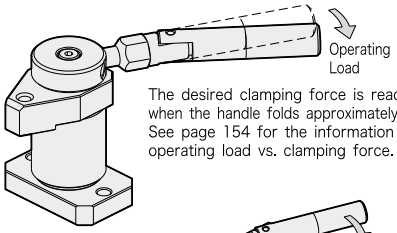

The desired clamping force is reached when the handle folds approximately 15°
See page 154 for the information on operating load vs. clamping force.

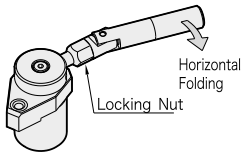

Note : Ensure that the handle is set to fold horizontally.

Plug-In Handle Installation

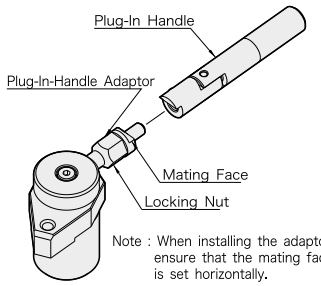

Note : When installing the adaptor, ensure that the mating face is set horizontally.

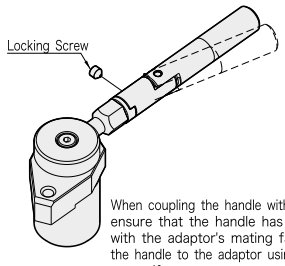

When coupling the handle with the adaptor, ensure that the handle has full contact with the adaptor's mating face. Secure the handle to the adaptor using the locking screw if necessary.

QLTL(Screw-In Handles)

Part Number	A	B	C	D	E	F	G	H	J	K	Weight (g)
51991141	89.5	60	13	18.5	6.5	8	12	5.5	M5x0.8	M5x0.8-16L	90
51991142	119	84	15	23	8	10	14	6.5	M6x1	M6x1 -20L	140

QLTL−RL(Plug-In Handles)

Part Number	A	B	C	D	E	F	G	Weight (g)
51991143	80	60	13	6	11	M5x0.8-5L	M5x0.8-16L	70
51991144	107	84	15	8	13	M6x1 -6L	M6x1 -20L	130

QLTL−RA(Plug-In-Handle Adaptors)

Part Number	A	B	C	D	E	F	G	H	J	K	Weight (g)
51991145	24.5	6	13	18.5	6.5	8	10	5.5	M5x0.8	6	20
51991146	30	7	15	23	8	10	12	6.5	M6x1	8	40

Plug-In Handle Coupled with the Adaptor

Part Number	A
51991143 **51991145**	104.5
51991144 **51991146**	137

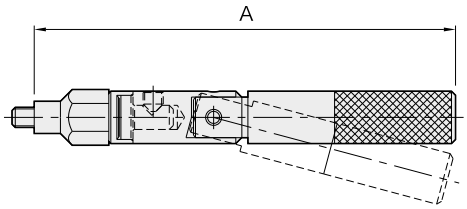

Performance Curves

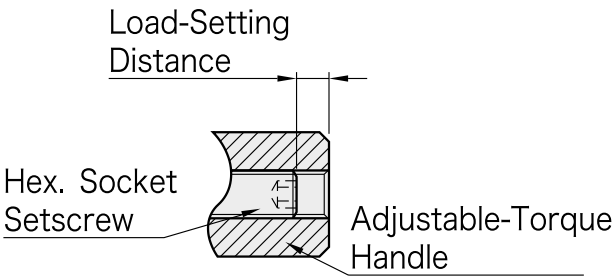

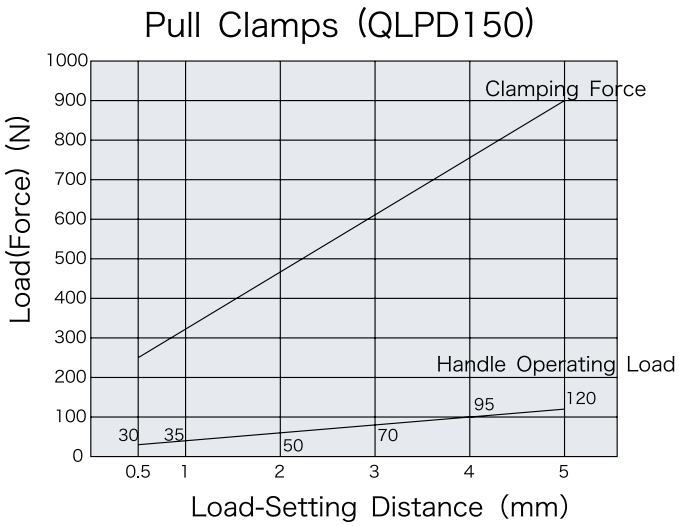

When clamping force is 900(N), load-setting distance is 5mm, and handle operating load is 120N.

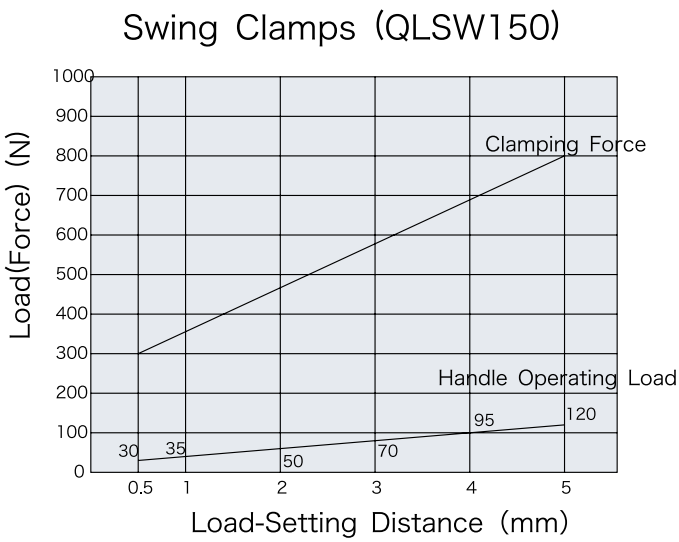

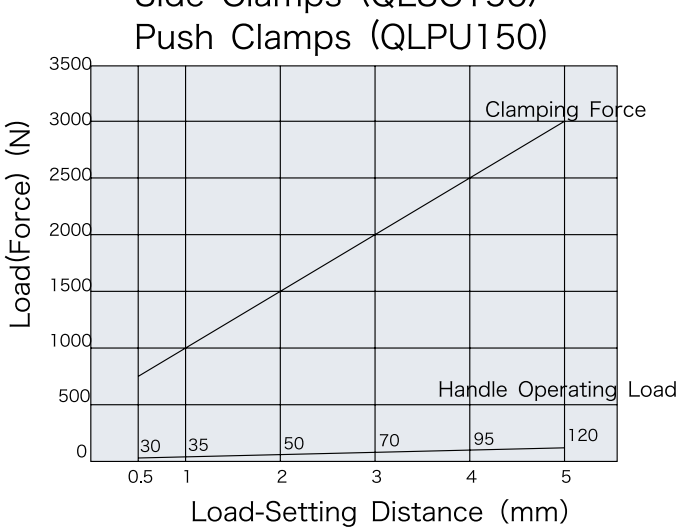

Note : The above performance curves apply when clamps are degreased.

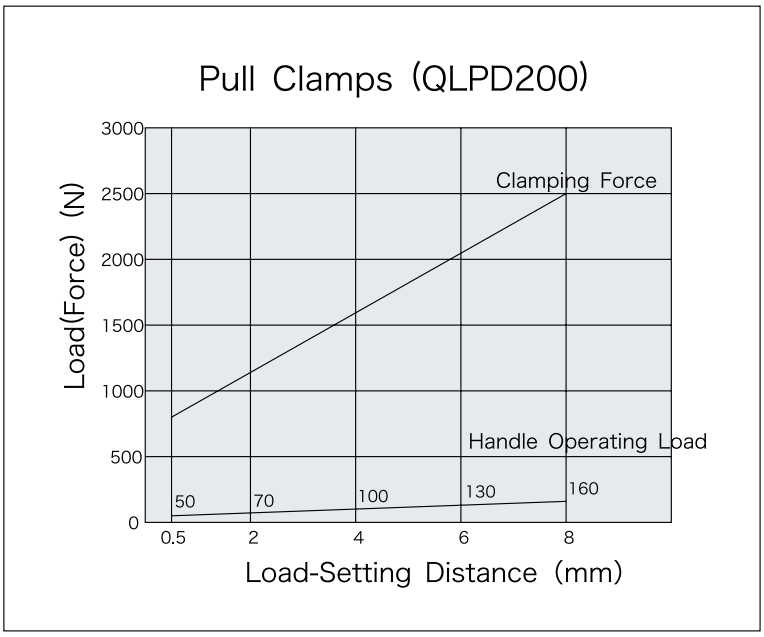

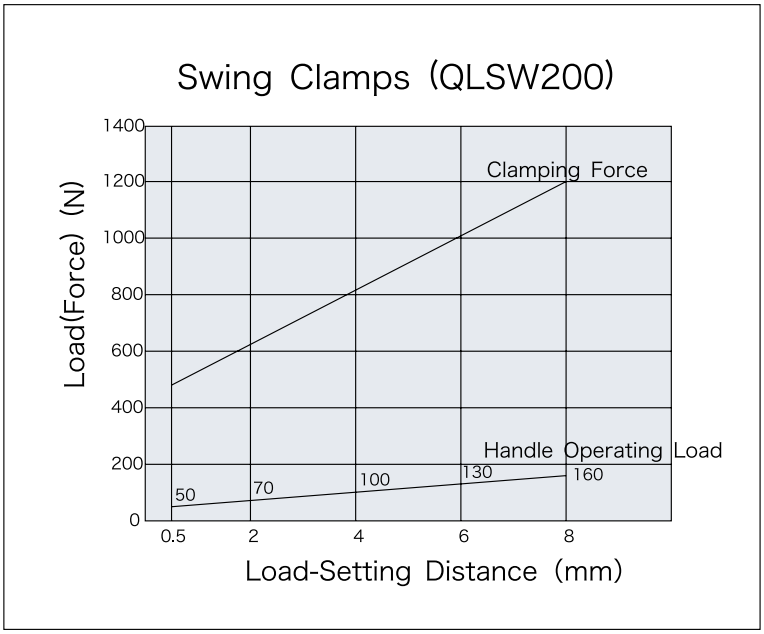

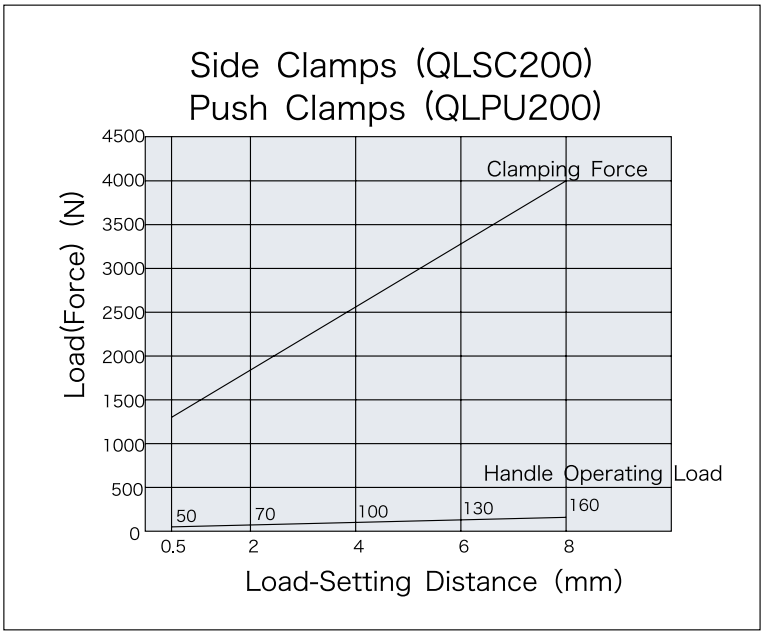

Note : The above performance curves apply when clamps are degreased.

APPLICATION EXAMPLES

Pull Clamps

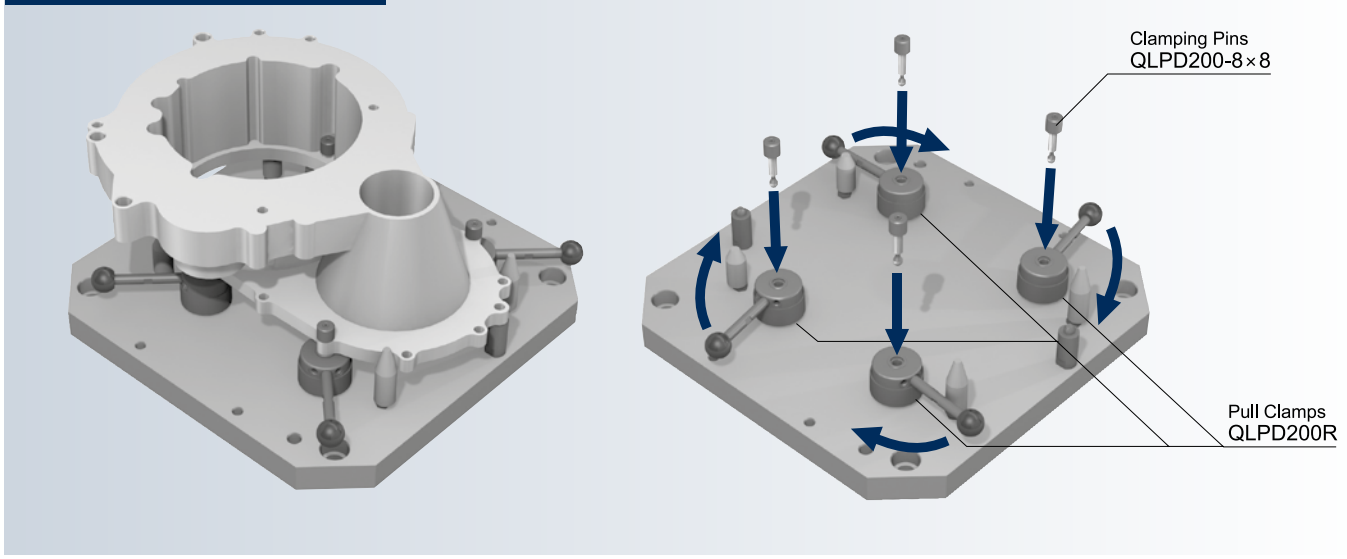

Swing Clamps

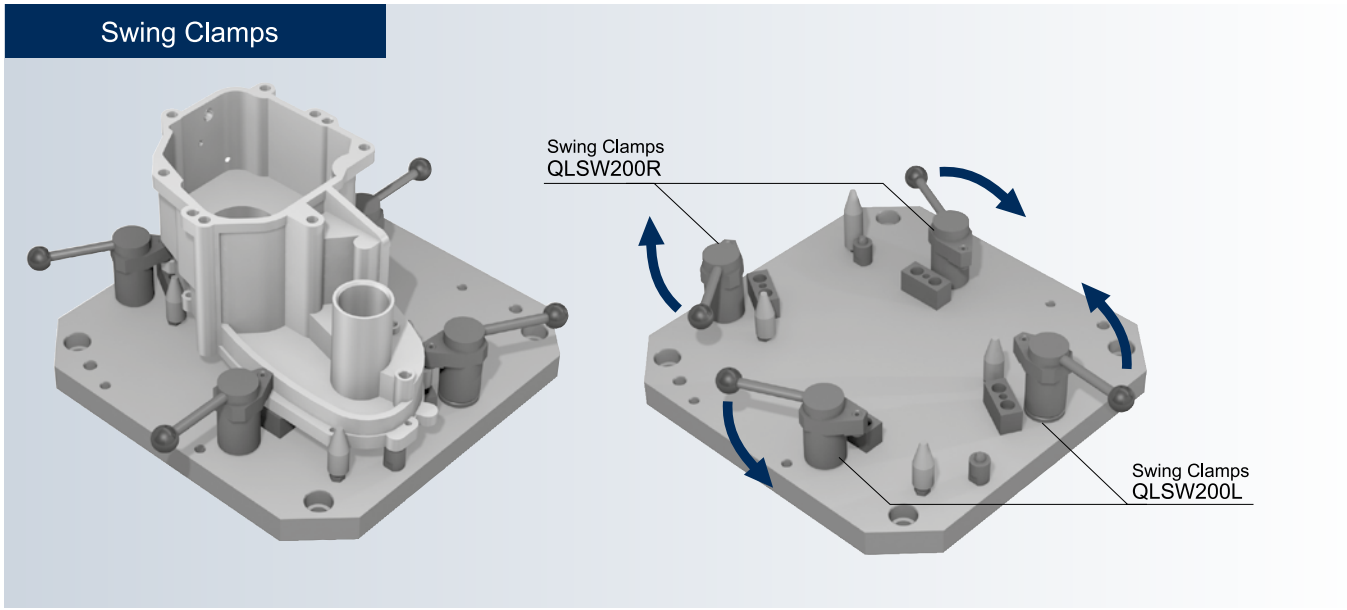

Side Clamps

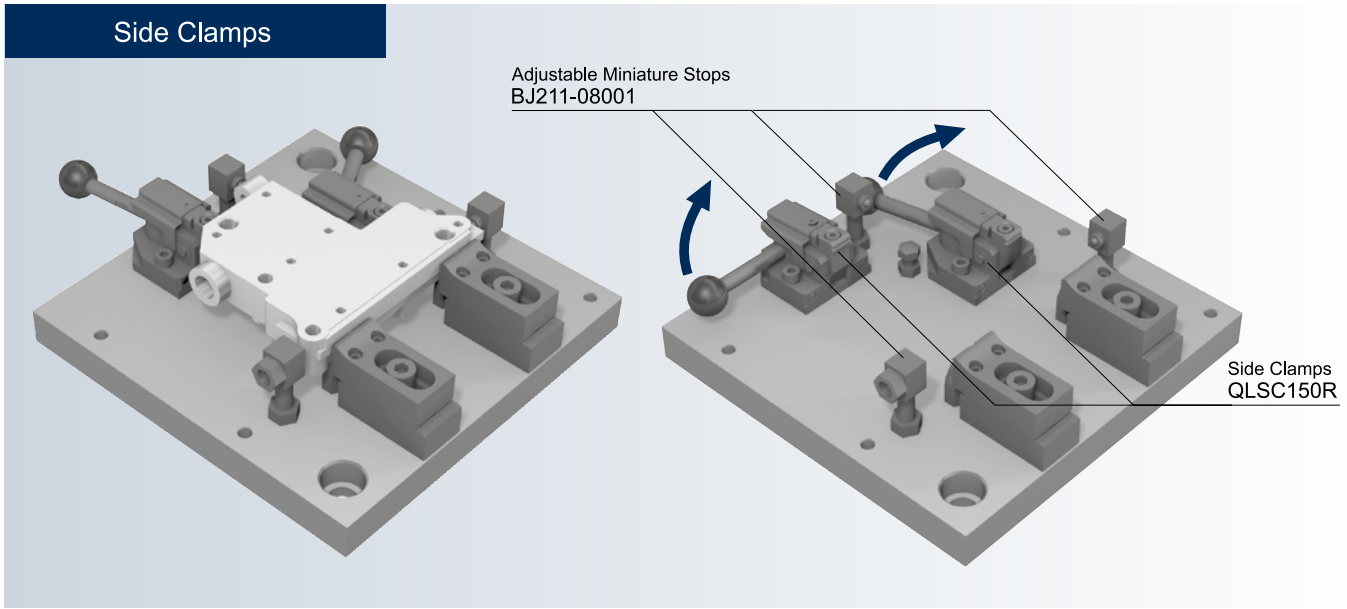

Actual Applications of Swing Clamps

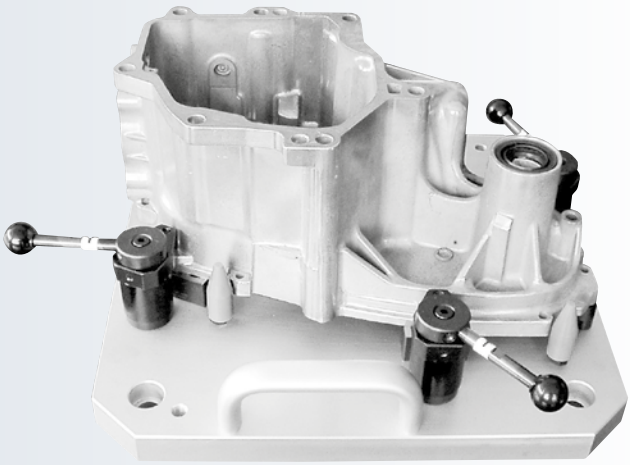

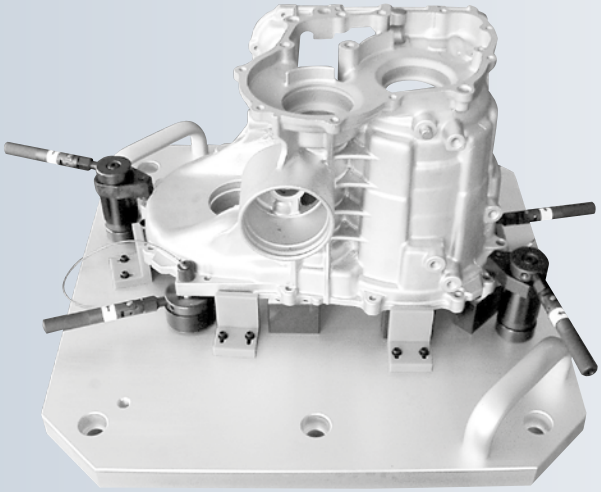

Actual Applications of Side Clamps

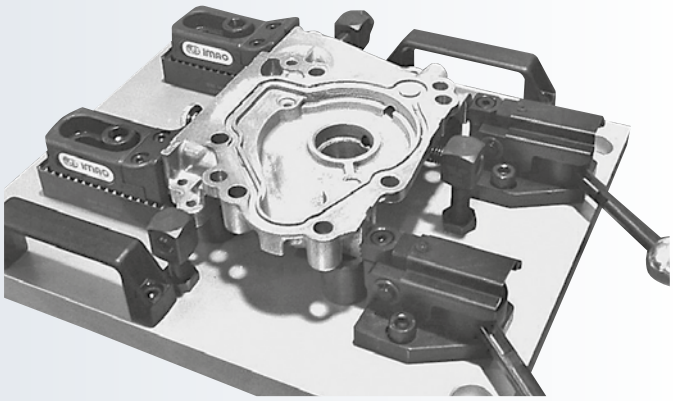

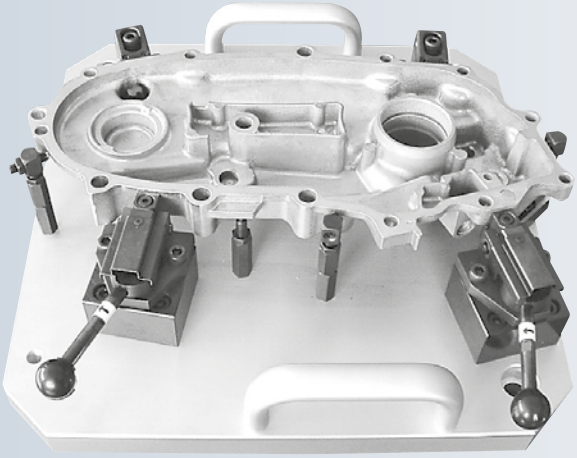

CP710 SPRING-LOADED WORK LOCATORS

NEW

Standard

Accurate

Body	
Material	S45C steel
Finitura	Black oxide
Heat Treat	Quenched and tempered

Locating Pin	
Material	SK4 steel
Heat Treat	Quenched and tempered

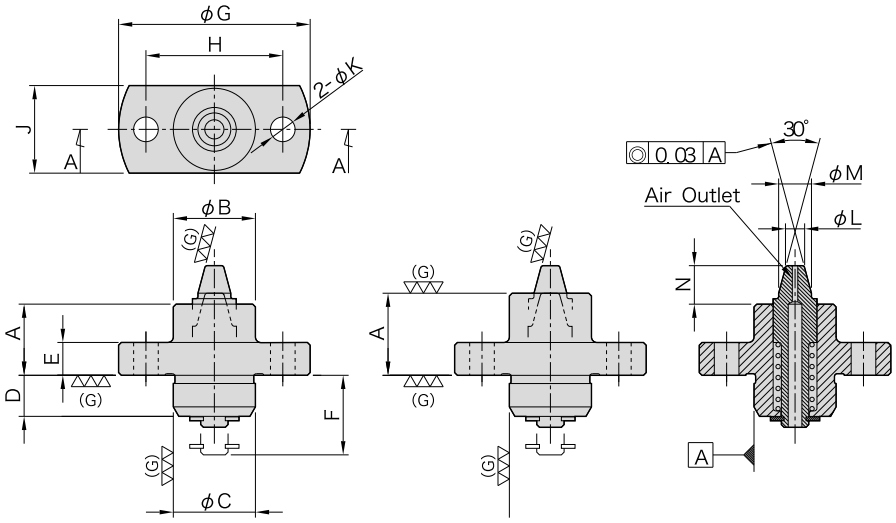

Mounting Hole Dimensions

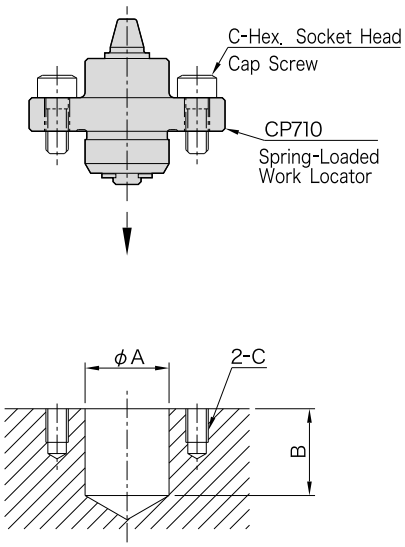

Series	A (H7)	B	C
51991521 **51991522**	15 (H7-effective depth: 8)	16	M4x0.7
51991525 **51991526**			
51991523 **51991524**	20 (H7-effective depth: 10)	21	M4x0.7
51991527 **51991528**			

Standard

Part Number	A	B	C (g6)	D	E	F	G	H	J	K	L	M
51991521	13	15	15	7.5	6	15	35	25	16	4.5	3.5	6
51991522											4.5	7
51991523	18	20	20	10	8	20	40	30	22	4.5	5.5	9
51991524											7.5	11

Part Number	N	Locating Hole Dia. ⁎)	Support Capacity (N)	Weight (g)
51991521	7.4	ϕ3.8 to ϕ 5.2	6.4 to 19.3	45
51991522		ϕ4.8 to ϕ 6.2		45
51991523	9.3	ϕ5.8 to ϕ 8.2	5.5 to 20.5	95
51991524		ϕ7.8 to ϕ10.2		95

Accurate

Part Number	A (±0.01)	B	C (g6)	D	E	F	G	H	J	K	L	M
51991525	15	15	15	7.5	6	15	35	25	16	4.5	3.5	6
51991526											4.5	7
51991527	20	20	20	10	8	20	40	30	22	4.5	5.5	9
51991528											7.5	11

Part Number	N	Locating Hole Dia. ⁎)	Support Capacity (N)	Weight (g)
51991525	5.4	ϕ3.8 to ϕ 5.2	6.4 to 19.3	50
51991526		ϕ4.8 to ϕ 6.2		50
51991527	7.3	ϕ5.8 to ϕ 8.2	5.5 to 20.5	100
51991528		ϕ7.8 to ϕ10.2		100

⁎)Within these diameter limits, locating holes can be chamfered up to 1mm x 1mm.

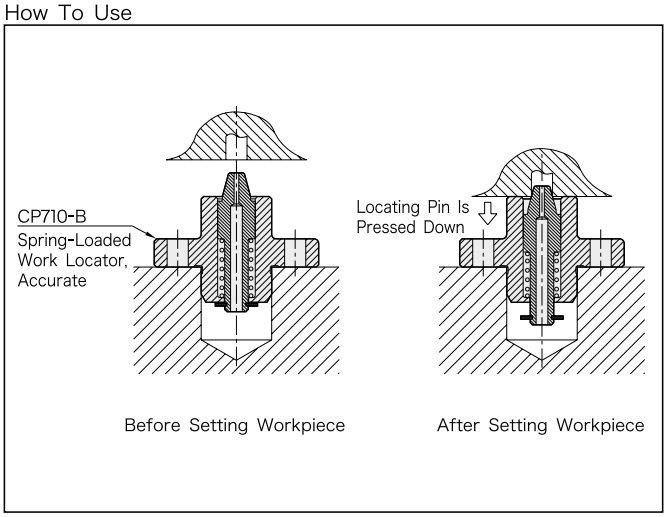

When the workpiece is set, the tapered pin is pressed down to locate it. The accurate style allows vertically as well as horizontally positioning the workpiece with accuracy.

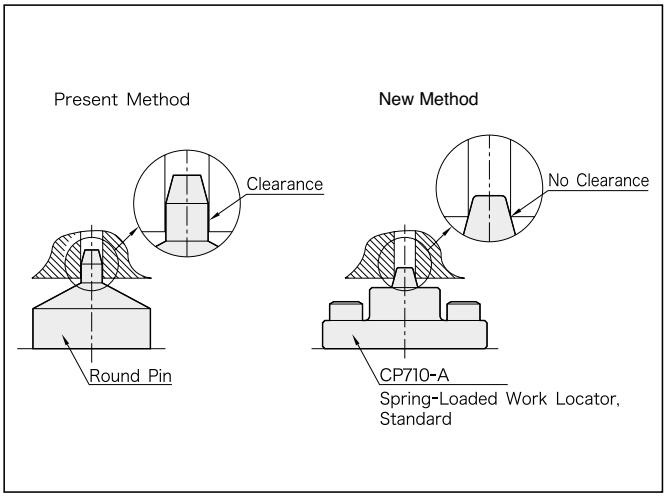

Use of tapered pin allows secure locating with no clearance between the locating hole and the tapered pin.

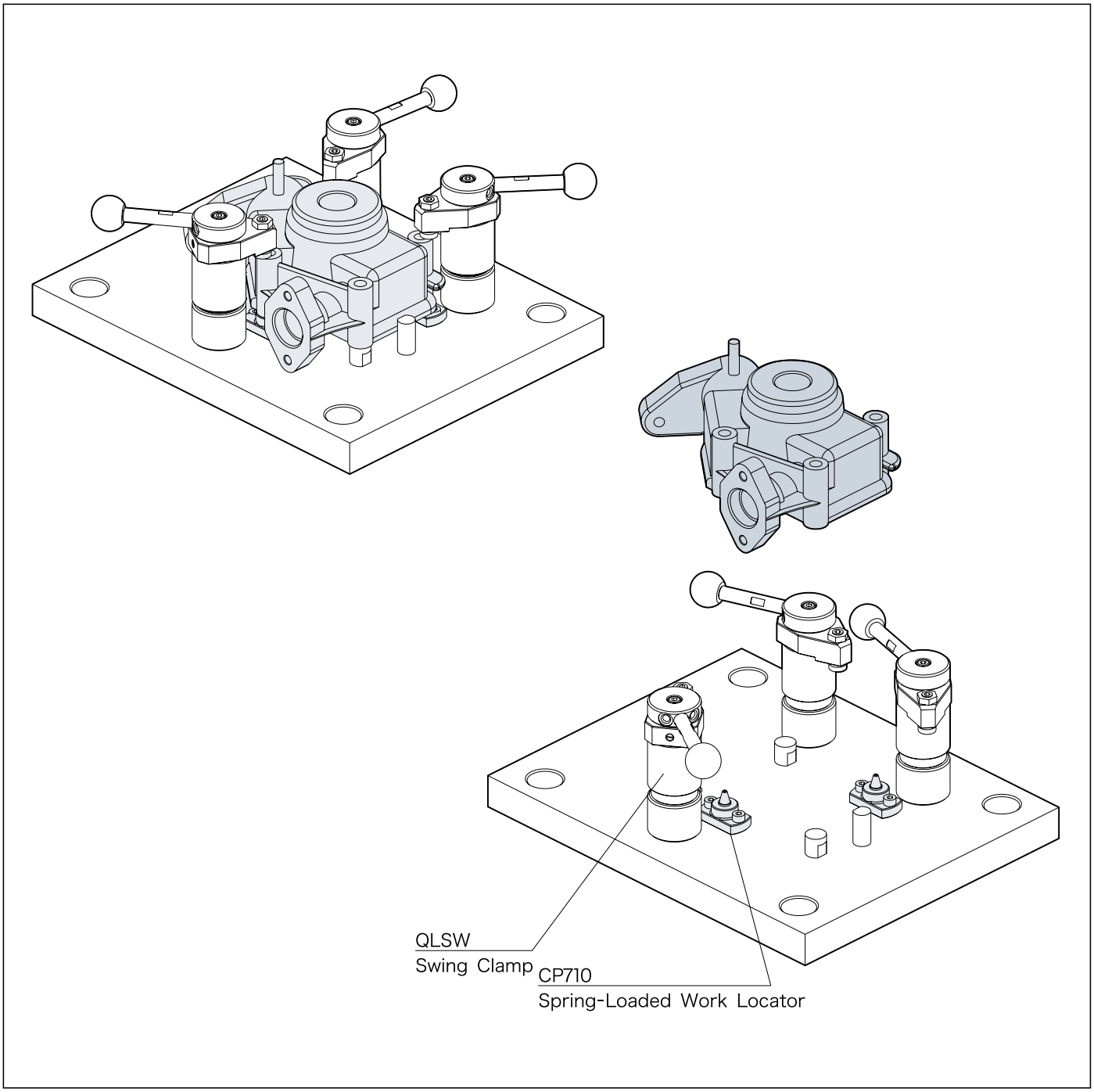

Note: In clamping, hold down the workpiece by hand to avoid lift that can be generated by spring force.

CP700 WORK LOCATORS

NEW

Body	
Material	S45C steel
Finish	Black oxide
Heat Treat	Quenched and tempered

Piston	
Material	SCM440 steel
Finish	Black oxide
Heat Treat	Quenched and tempered

Handle	
Material	SC45 steel
Finish	Black oxide

Ball Knob	
Material	ABS resin
Color	Black

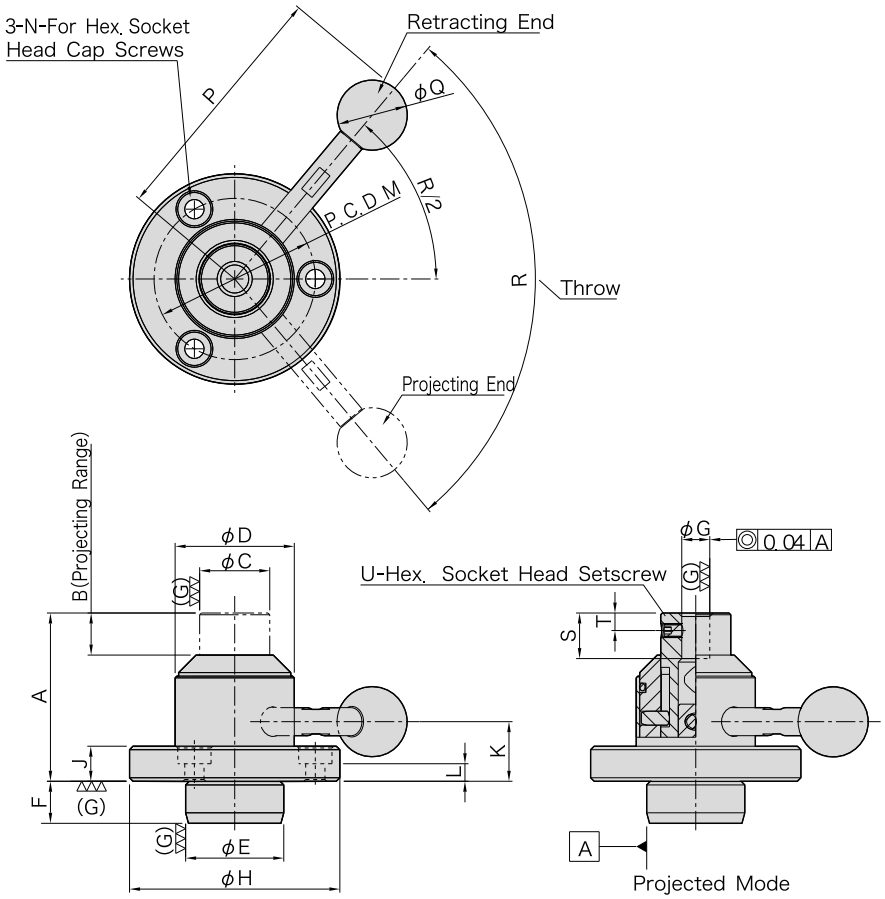

How To Use

Present Method

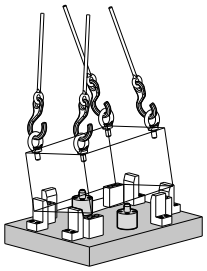

Galling and damage caused

Our Method

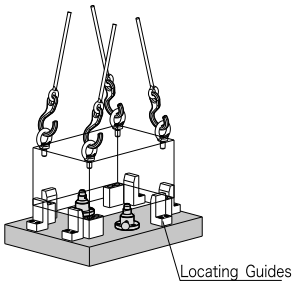

No galling caused

The locating pin gets projected only after the workpiece is set on supports. This allows loading and unloading the workpiece smoothly, with no galling. Get the locating pin projected to locate the workpiece after it is roughly positioned with the help of locating guides.

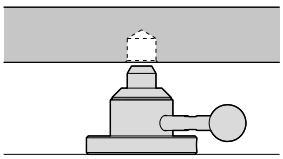

Retracted Mode

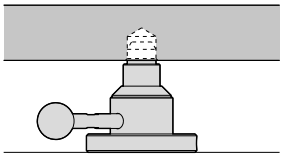

Projected Mode

Part Number	A	B	C	D	E (g6)	F	G (G7)	H	J	K	L	M (P.C.D)	N	P
51991529	48	12	20	34	28	12	8	60	10	17	5	46	M5	71
51991530	61	15	30	48	42	14	12	80	13	23	7	63	M6	94

Part Number	Q	R	S	T	U	Allowable Operating Load (N)*)	Max. Workpiece Weight (kg)**)	Weight (kg)
51991529	20	100	13	5	M4x0.7-5L	150	250	0.42
51991530	25	90	15	8	M6x1 -8L	200	300	1.04

*) Allowable load to operate the handle
**) Max. weight that allows the locating pin to project and provide workpiece centering

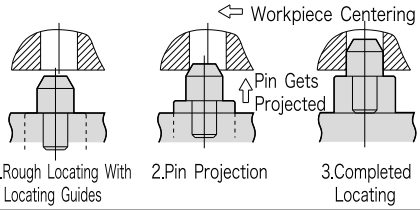

CP701 EXTENDABLE WORK LOCATORS

NEW

Body	
Material	S45C steel
Finish	Black oxide
Heat Treat	Quenched and tempered

Pistone	
Material	SC45 steel
Finish	Black oxide

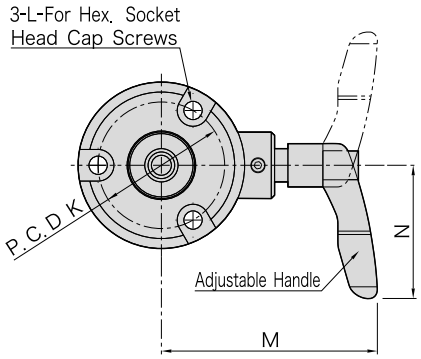

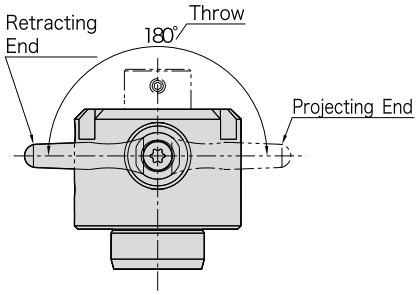

The handle position can be changed freely, clockwise or counterclockwise.

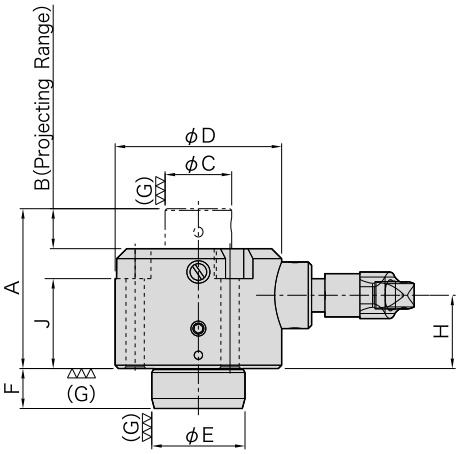

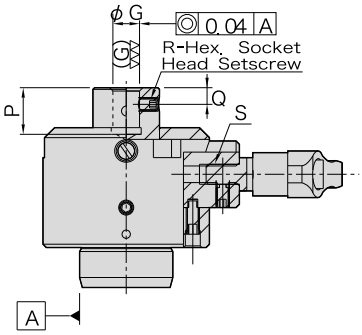

Projected Mode

How To Use

Extended Application

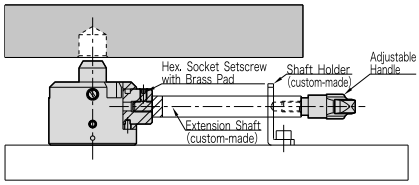

With an extension shaft and a shaft holder prepared separately, the handle control can be easily done even when small space is available under the workpiece.

Locating-Pin Mounting

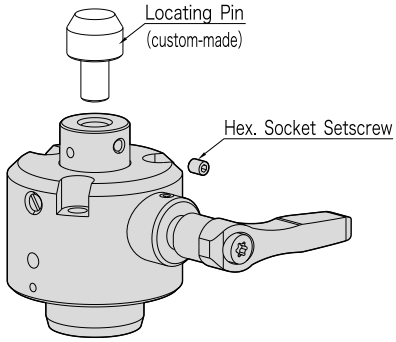

Projected Mode

A locating pin can easily be mounted by using a hex. socket setscrew when the piston is fully projected (locating pins must be prepared separately).

Locating-Pin Head Dimensions

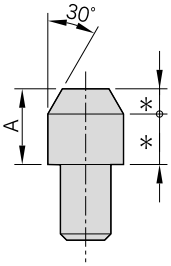

A
12 or less
15 or less

Determine the dimensions marked with an asterisk considering a clearance set between the workpiece and the locating guides. When the taper angle is determined to be smaller than 30° (recommended), set the clearance smaller.

Part Number	A	B	C	D	E (g6)	F	G (G7)	H	J	K (P.C.D)	L	M	N	P
51991533	48	12	20	50	28	12	8	22	27	38	M5	65	40	14
51991534	61	15	30	65	42	14	12	26	31	52	M6	87.5	65	16

Part Number	Q	R	S	Adjustable Handles	Allowable Operating Load(N)*	Max. Workpiece Weight(kg)**	Weight (kg)
51991533	5	M4x0.7-5L	M6x1 12 deep	FKR6X10-BR	170	250	0.59
51991534	6	M5x0.8-8L	M8x1.25 17 deep	FKR8X15-BR	210	300	1.31

*) Allowable load to operate the handle
**) Max. weight that allows the locating pin to project and provide workpiece centering

Features

- Can support heavy workpieces made from steel or cast iron
- No tools needed
- Different locating pins can be mounted depending on workpiece's locating holes.
- The piston stays locked when it is fully projected or retracted until the handle is operated again.

BJ090 RISER BLOCKS

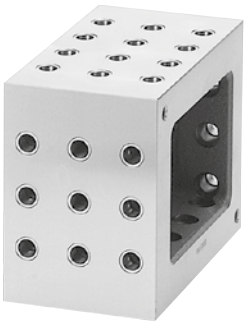

[Body]
Material:FC300 cast iron
Annealed
Precision ground

[Alignment Bushing]
Material:SUJ2 steel
Heat treated

[Threaded Insert]
Material:S45C steel
Heat treated

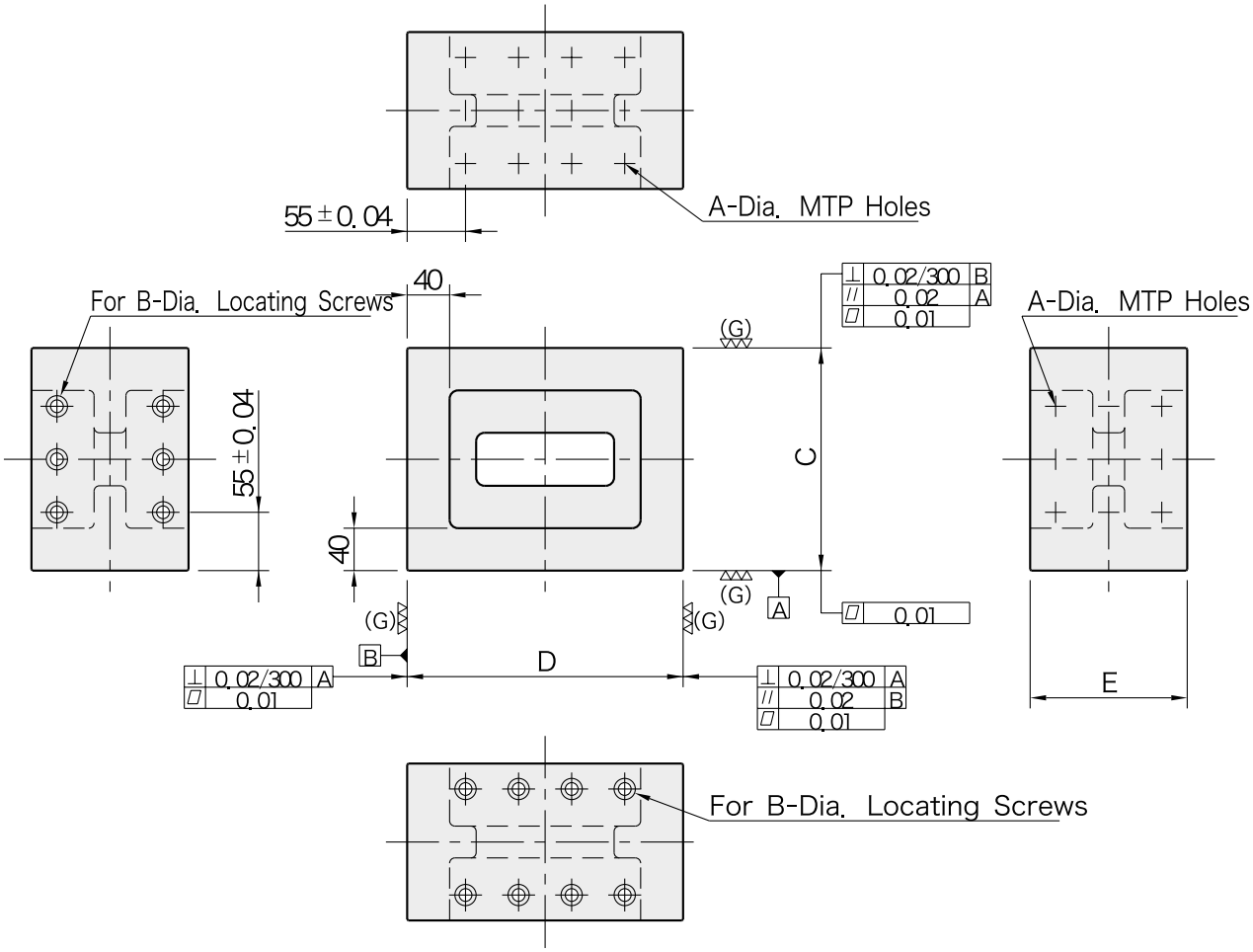

Part Number	A (F7)	A (Thread)	B (F7)	C (±0.02)	D (±0.02)	E	No. of MTP Holes	No. of Mounting Holes	Proper Locating Screws Cod.	Weight (kg)
51991535	12	M12x1.75	12	160	210	148	15	10	**51991863**	26
51991536				210	260		21	14		37
51991537	16	M16x2	16	160	210	148	15	10	**51991865**	25
51991538				210	260		21	14		36

·MTP-hole protection plugs and eye bolts are included.
·Locate on a tooling plate or block using Locating Screws.
·MTP holes spacing : 50 ± 0.02mm

BJ091 COMPACT RISER BLOCKS

[Body]
Material:FC300 cast iron
Annealed
Precision ground

[Alignment Bushing]
Material:SUJ2 steel
Heat treated

[Threaded Insert]
Material:S45C steel
Heat treated

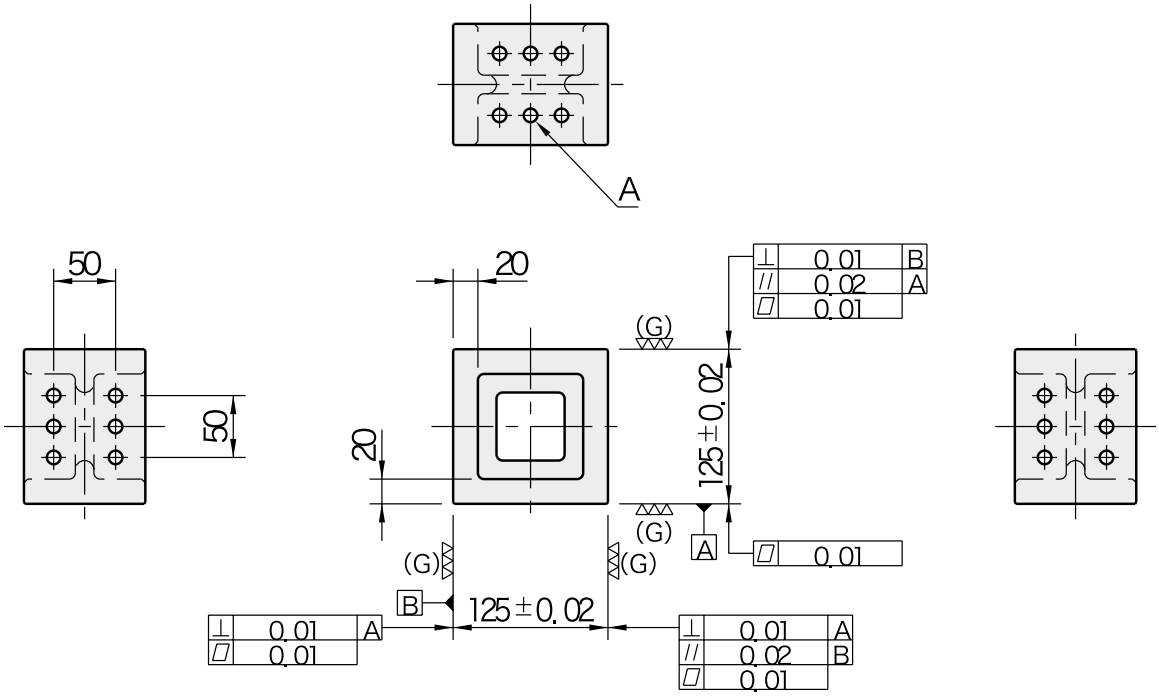

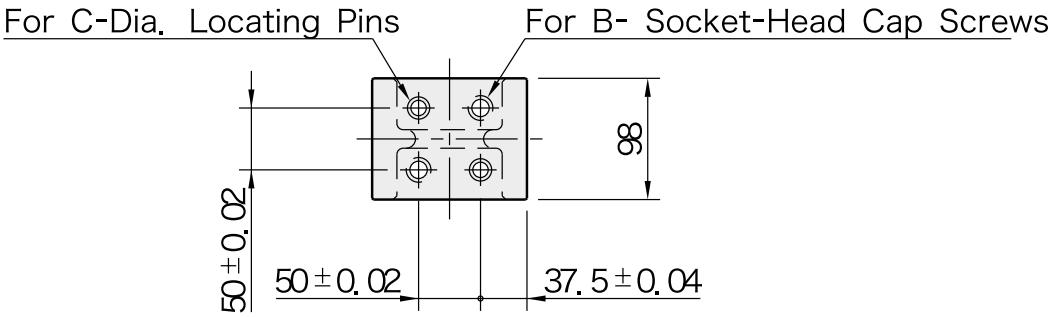

Part Number	A	B	C (F7)	Weight (kg)
51991539	M12x1.75	M12	12	6.3
51991540	M16x2	M16	16	6.2

・Locate on a tooling plate or block using a round pin and a diamond pin.

BJ633 H RISERS

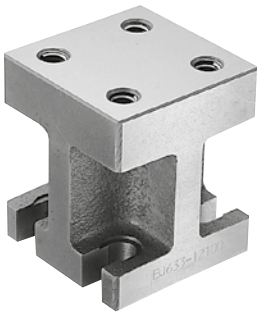

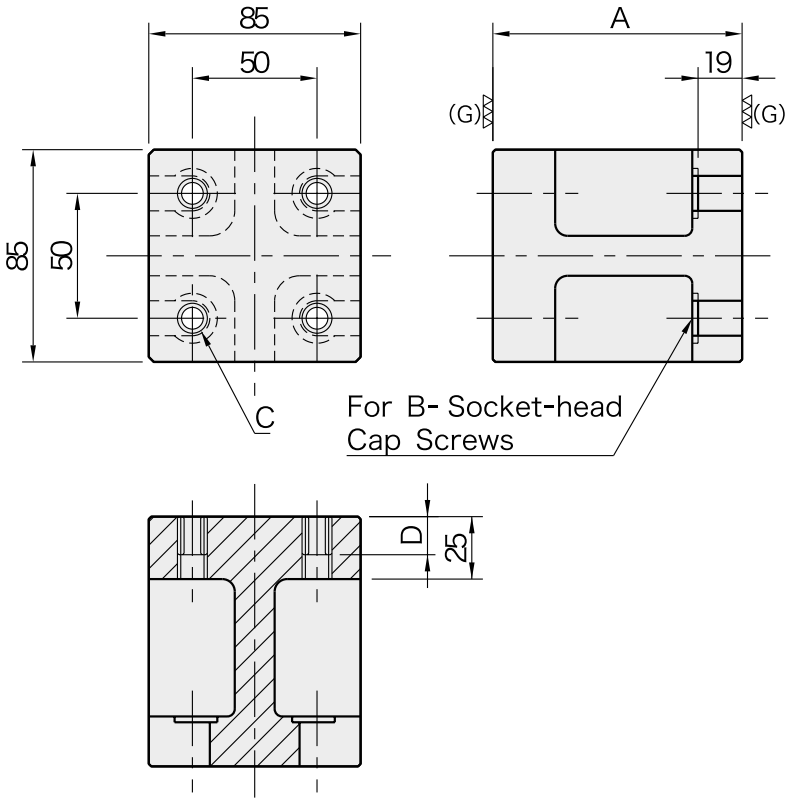

【Body】
- ■Material : FC300 cast iron
- ■Annealed
- ■Precision ground

【Threaded Insert】
- ■Material : S45C steel
- ■Heat treated

Part Number	A (±0.01)	B	C	D	Weight (kg)
51991543	100	M16	M16×2	16	3.2
51991544	125				3.8

■How To Use

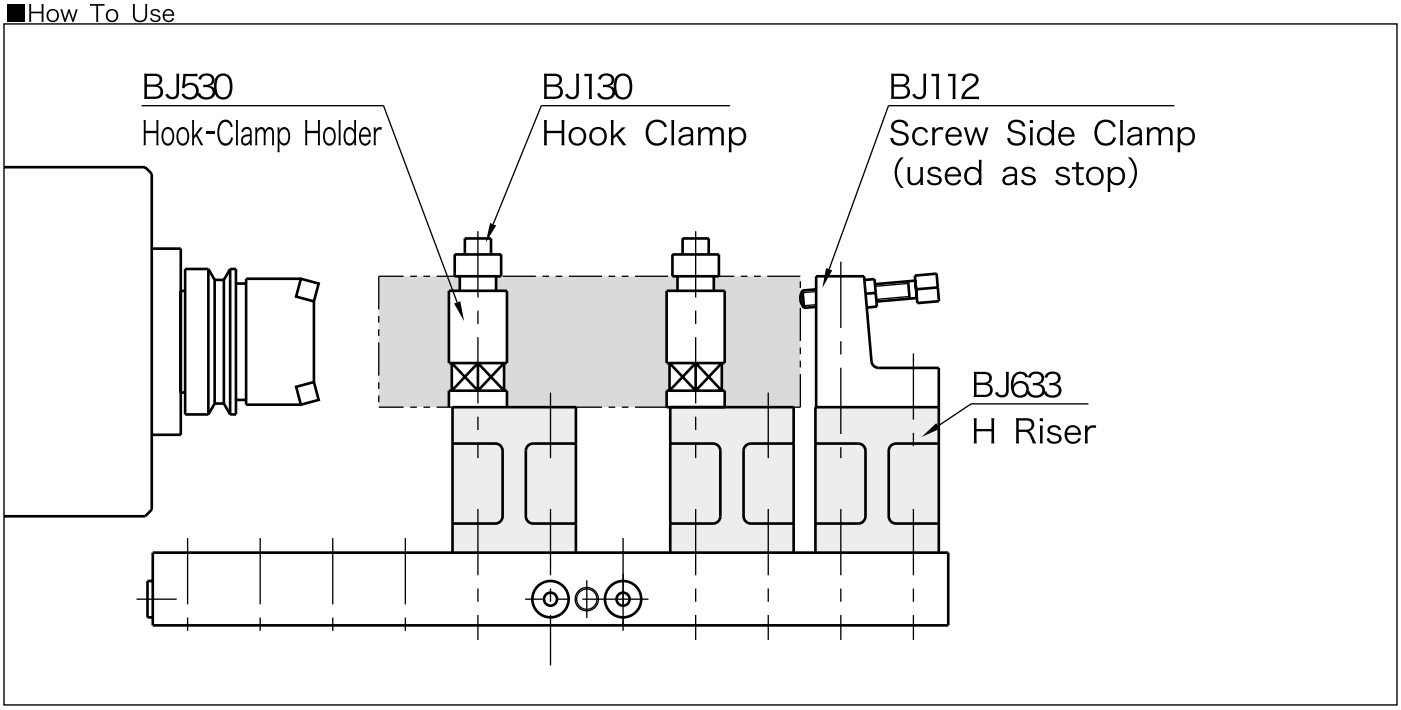

Use to raise a workpiece or components, parallel to a tooling plate.

BJ634 H RISERS

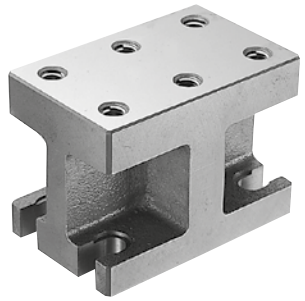

【Body】
- ■Material : FC300 cast iron
- ■Annealed
- ■Precision ground

【Threaded Insert】
- ■Material : S45C steel
- ■Heat treated

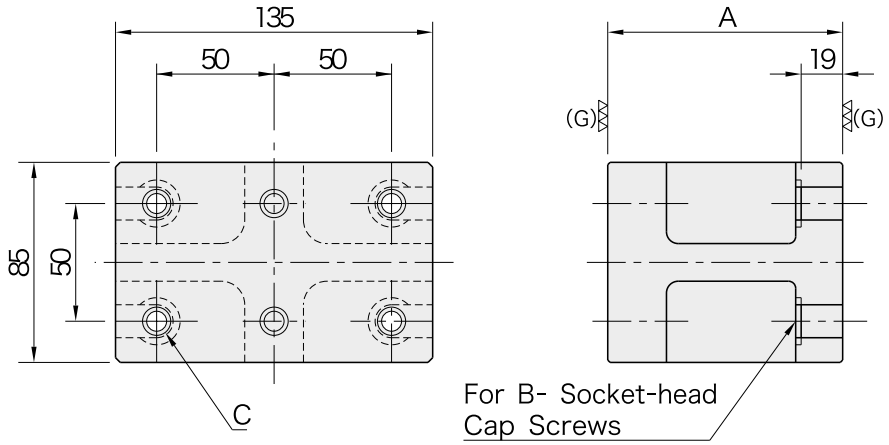

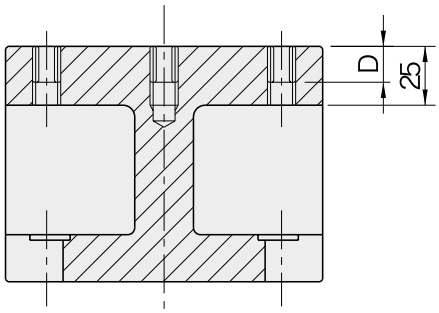

Part Number	A (±0.01)	B	C	D	Weight (kg)
51991547	100	M16	M16×2	16	5.1
51991548	125				5.8

BJ440(Mini) V BLOCKS

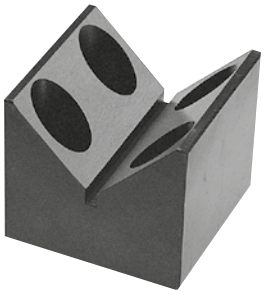

- Material : S45C steel
- Heat treated
- Black oxide finish
- Precision ground

BJ440-08032

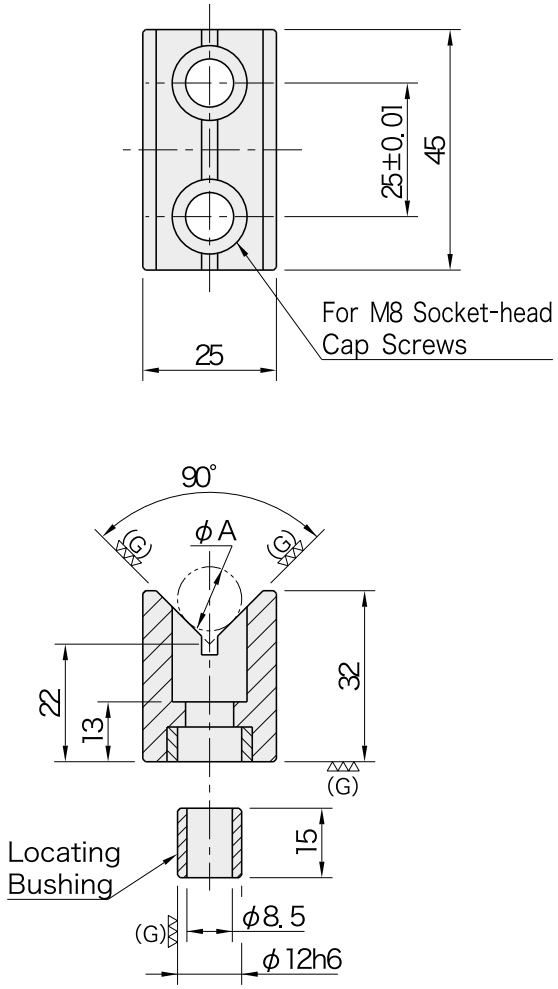

BJ440-08040

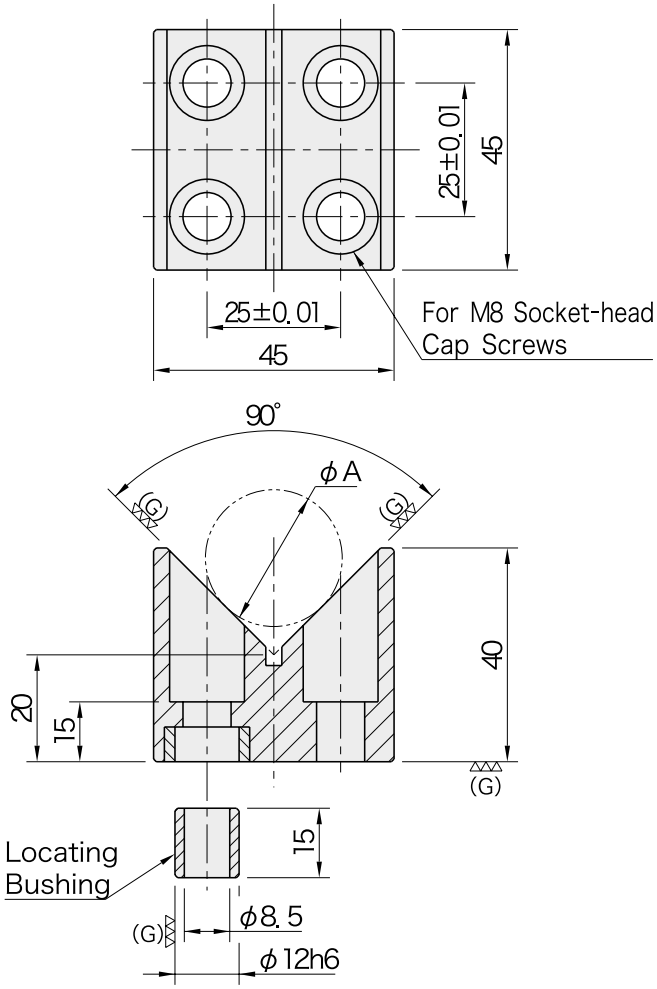

Part Number	A		Weight (g)
	min.	max.	
51991549	10	25	200
51991550	15	50	370

BJ440 V BLOCKS

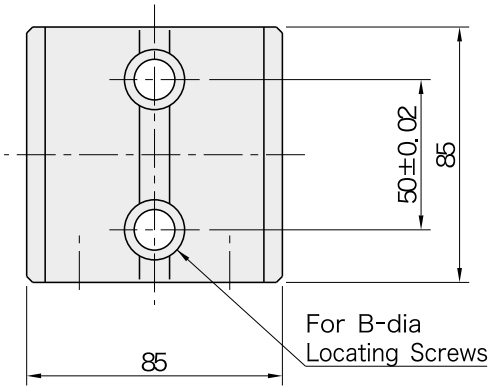

■Material : S45C steel
■Heat treated
■Black oxide finish
■Precision ground

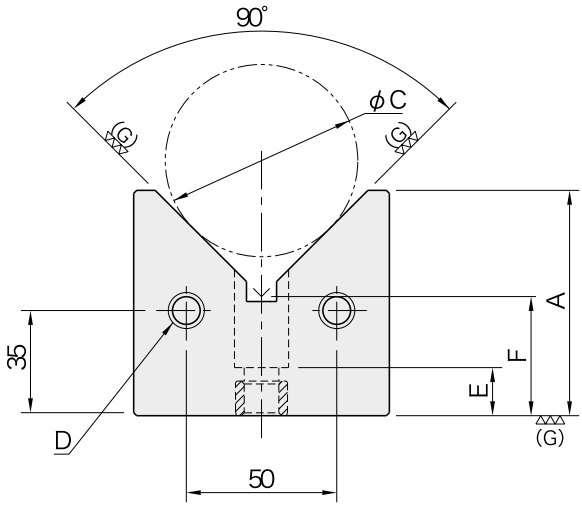

Part Number	A	B (F7)	C Min.	C Max.	D	E	F
51991551	63	12	15	80	M12×1.75 30 deep	22	34.72
51991552	75			100			39.65
51991553	63	16	35	80	M16×2 35 deep	25	34.72
51991554	75		15	100			39.65

Part Number	Proper Locating Screws Cod.	Weight (kg)
51991551	**51991862**	2.9
51991552		3.3
51991553	**51991864**	2.9
51991554		3.3

BJ770 METAL PROTECTION PLUGS

51991556

51991555

Part Number	Thread	Weight (g)
51991555	M12	15
51991556	M16	20
57290020	D16/M12	18

·Replacement protection plugs.
·Use to keep chips and dirt out of unused MTP holes.

BJ701 HIGH PRECISION LOCATING SCREW

Material:SCM435 steel
Heat treated
Black oxide finish
Precision ground

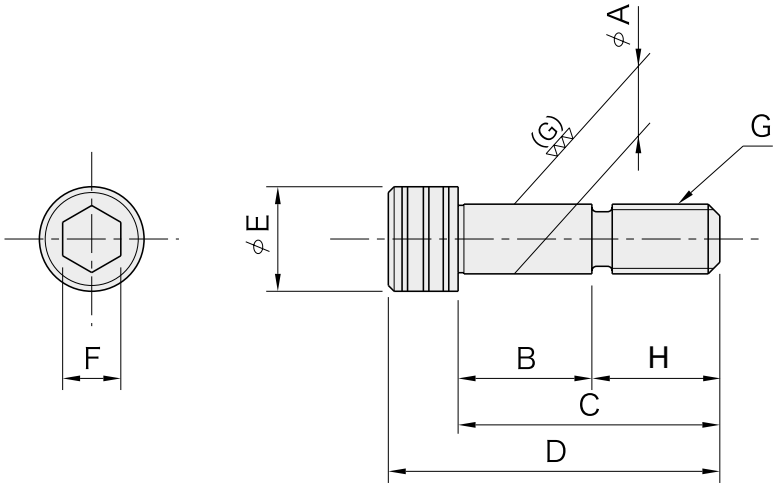

Part Number	A*	B	C	D	E	F	G	H	Weight (g)
51 99 18 66	12	23	45	57	18	10	M12x1,75	22	52
51 99 18 62		33	55	67					59
51 99 18 63		43	65	77					68
51 99 18 65	16	30	55	71	24	14	M16x2	25	120
51 99 18 64		40	65	81					134

* - 0,005
- 0,013

CENTERING PIN

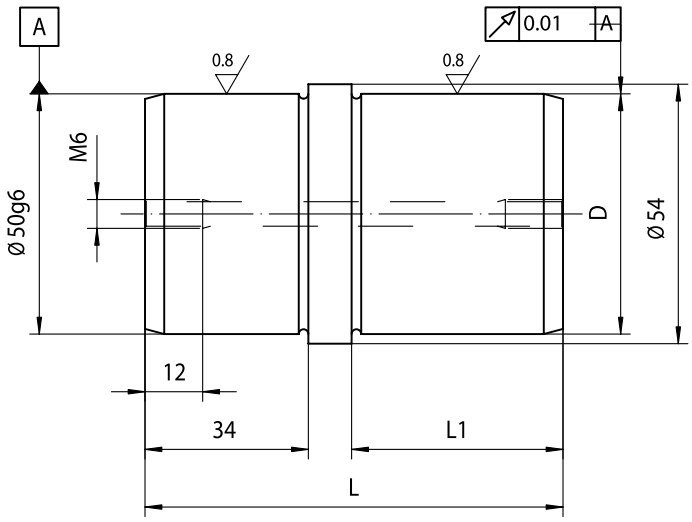

Part Number	D_{g6}	L	L1	Weight (Kg)
57001051	25	77	34	0.81
57001052	40	87	44	1.12
57001053	50	87	44	1.36

CENTERING PIN FOR ALIGNING HOLE

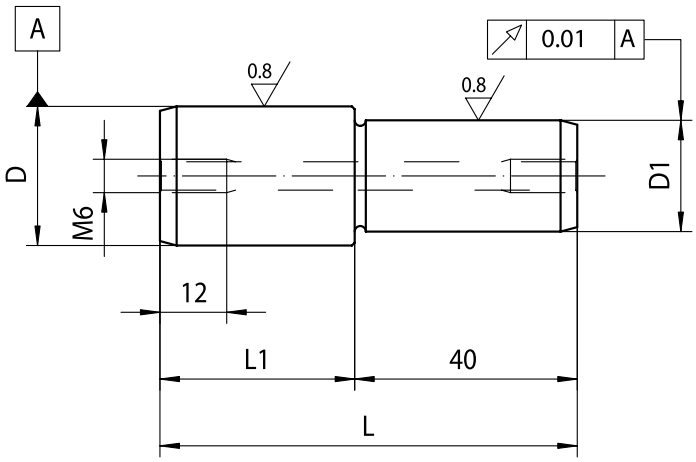

Part Number	D_{g6}	$D1_{g6}$	L	L1	Weight (Kg)
57001061	25	20	75	35	0.23
57001062	30	20	85	45	0.34
57001063	30	35	85	45	0.40

CP106 TOE CLAMPS

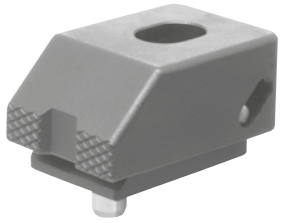

Material:S45C steel
Finish :Black oxide
Heat Treated

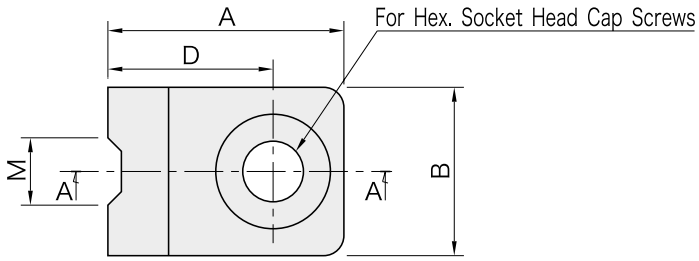

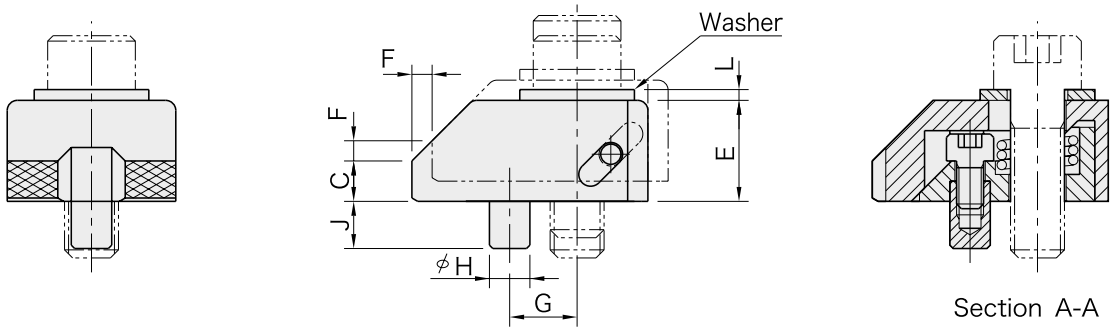

Part Number	A	B	C	D	E	F	G	H (h7)	J	K	L	M	Clamping Force (N)	Allowable Screw Torque (N·m)	Weight (g)
51991557	35	25	6	24.5	15	3	10	6	7	M 8	1.6	10	7,000	25	100
51991558	43	30	8	29	19	4	12	6	7	M10	2	11	8,500	50	185
51991559	54	35	9	37	23	5	16	8	10	M12	2.3	12	20,000	90	320
51991560	65	40	10	45	25	6	20	10	10	M16	3.2	14	40,000	200	520

How To Use and Install

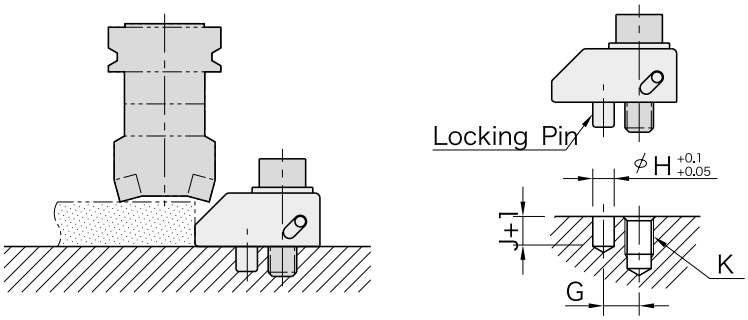

・Drill a cap-screw hole and a locking-pin hole as specified.
・One flat washer is included.

CP107 SIDE CLAMPS

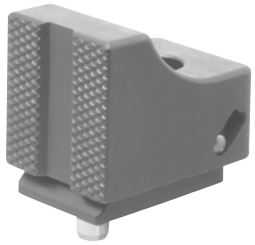

Material: S45C steel
Finish : Black oxide
Heat Treated

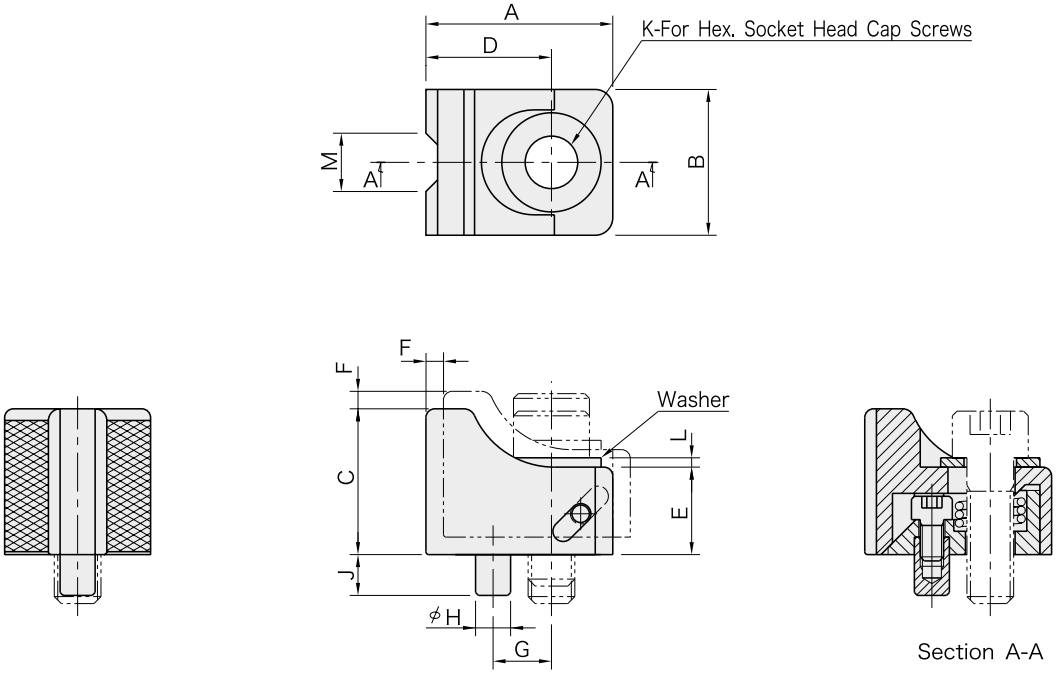

Part Number	A	B	C	D	E	F	G	H (h7)	J	K	L	M	Clamping Force (N)	Allowable Screw Torque (N·m)	Weight (g)
51991561	32	25	25	21.5	15	3	10	6	7	M 8	1.6	10	7,000	25	115
51991562	40	30	32	26	19	4	12	6	7	M10	2	11	8,500	50	225
51991563	50	35	38	33	23	5	16	8	10	M12	2.3	12	20,000	90	390
51991564	60	40	45	40	25	6	20	10	10	M16	3.2	14	40,000	200	640

How To Use and Install

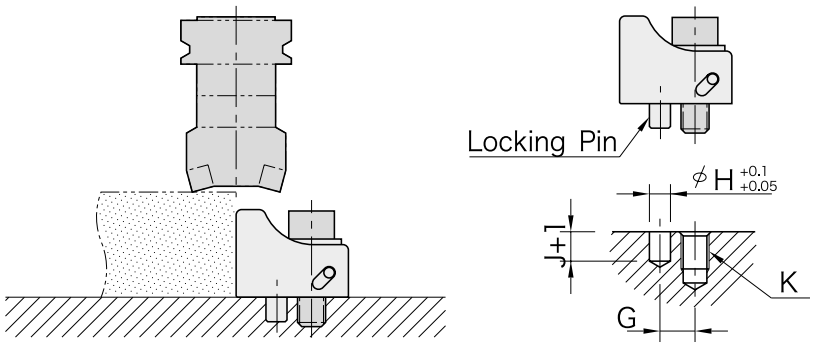

- Drill a cap-screw hole and a locking-pin hole as specified.
- One flat washer is included.

CP100 SIDE CLAMPS

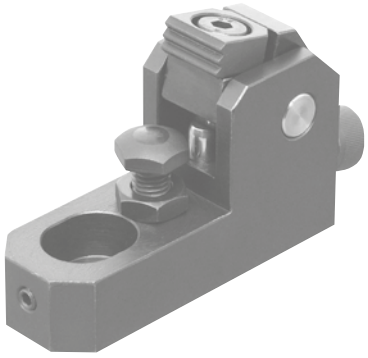

[Body]
Material: S45C steel
Finish : Black oxide
Heat Treated

[Arm]
Material: S45C steel
Finish : Black oxide

[Jaw]
Material: SKH51 steel
Finish : Black oxide
Heat Treated

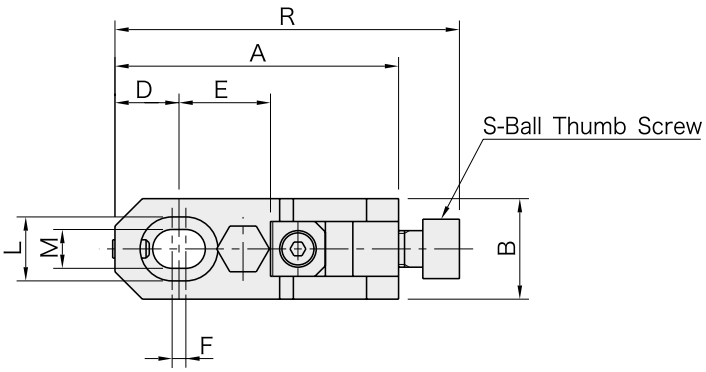

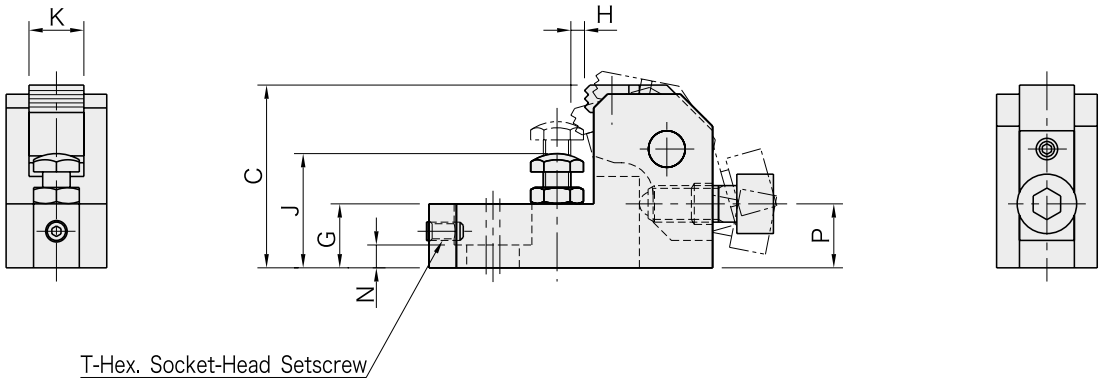

Part Number	A	B	C	D	E	F	G	H	J	K	L	M
51991565	62	22	40	14	20	3	14	3	25 to 32	12	14	8.5
51991566	78	25	50	18	25	4	18	3.7	32 to 40	16	17.5	11
51991567	93	32	60	21	30	5	21	4.5	40 to 48	20	20	13
51991568	124	38	80	28	40	6	27	6	48 to 63	25	26	17

Part Number	N	P	R	S	T	Clamping Force (N)	Allowable Screw Torque (N·m)	Weight (kg)
51991565	5	14	75.5	M 8x1.25-20L	M4x0.7-8L	6,000	15	0.23
51991566	7	17.5	95	M10x1.5-25L	M5x0.8-10L	10,000	30	0.41
51991567	8	21	113	M12x1.75-30L	M6x1-12L	17,000	65	0.75
51991568	10	28	151	M16x2-40L	M8x1.25-16L	25,000	130	1.57

Spare jaws

Cod.	
51992035	See page 14.95
51992038	
51992042	
51992044	

How To Use and Install

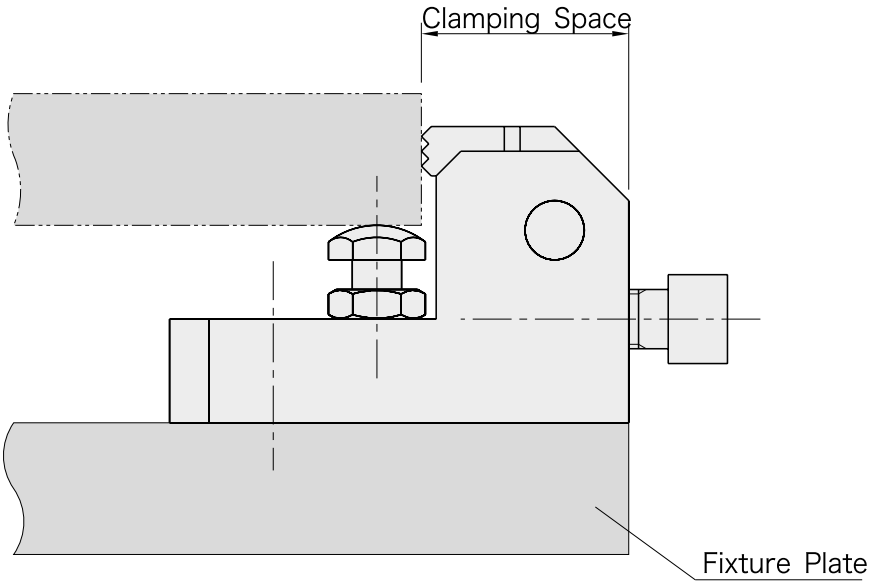

Smaller clamping space allows clamping a larger workpiece.

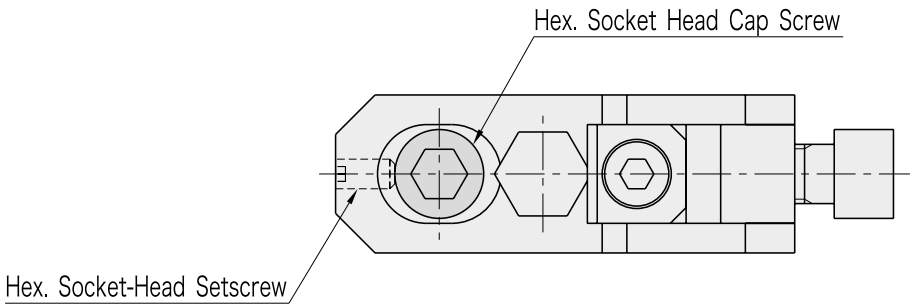

The hex. socket-head setscrew works to prevent the clamp from sliding back if screwed in until it contacts the cap screw.

CP101 SIDE CLAMPS

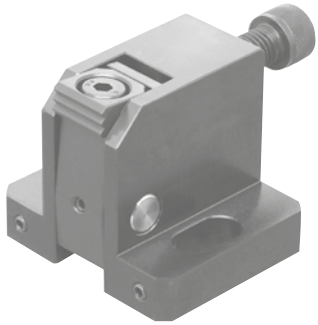

[Body]
Material: S45C steel
Finish : Black oxide

[Arm]
Material: S45C steel
Finish : Black oxide
Heat Treated

[Jaw]
Material: SKH51 steel
Finish : Black oxide
Heat Treated

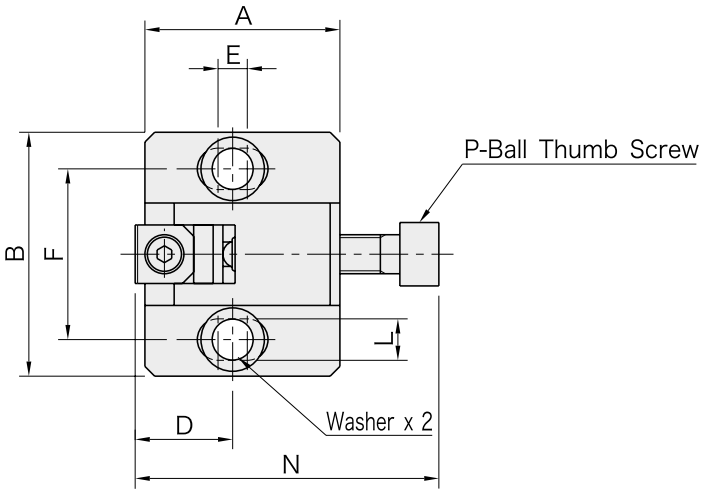

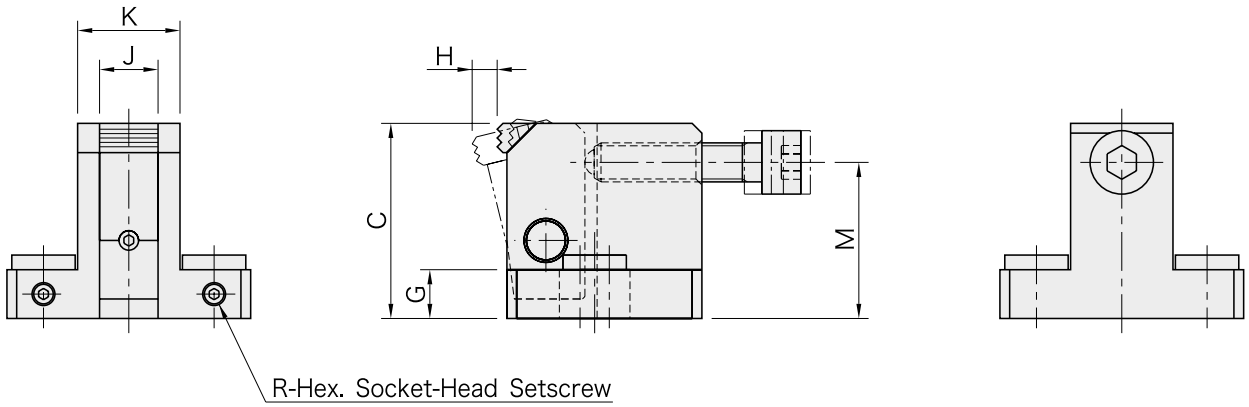

Part Number	A	B	C	D	E	F	G	H	J	K	L
51991569	40	50	40	20	6	35	10	5.3	12	21	8.5
51991570	50	65	50	25	8	45	12	7.1	16	27	11
51991571	60	70	60	30	10	50	15	8	20	31	13
51991572	80	90	80	40	15	65	20	10.2	25	39	17

Part Number	M	N	P	R	Clamping Force (N)	Allowable Screw Torque (N·m)	Weight (kg)
51991569	32	62.5	M 8x1.25-35L	M4x0.7-10L	11,000	25	0.33
51991570	40	74	M10x1.5-40L	M4x0.7-12L	18,000	50	0.66
51991571	48	91	M12x1.75-50L	M5x0.8-15L	25,000	90	1.06
51991572	64	115	M16x2-60L	M6x1-20L	46,000	200	2.38

Spare jaws

Cod.	
51992035	See page 14.95
51992038	
51992042	
51992044	

How To Install

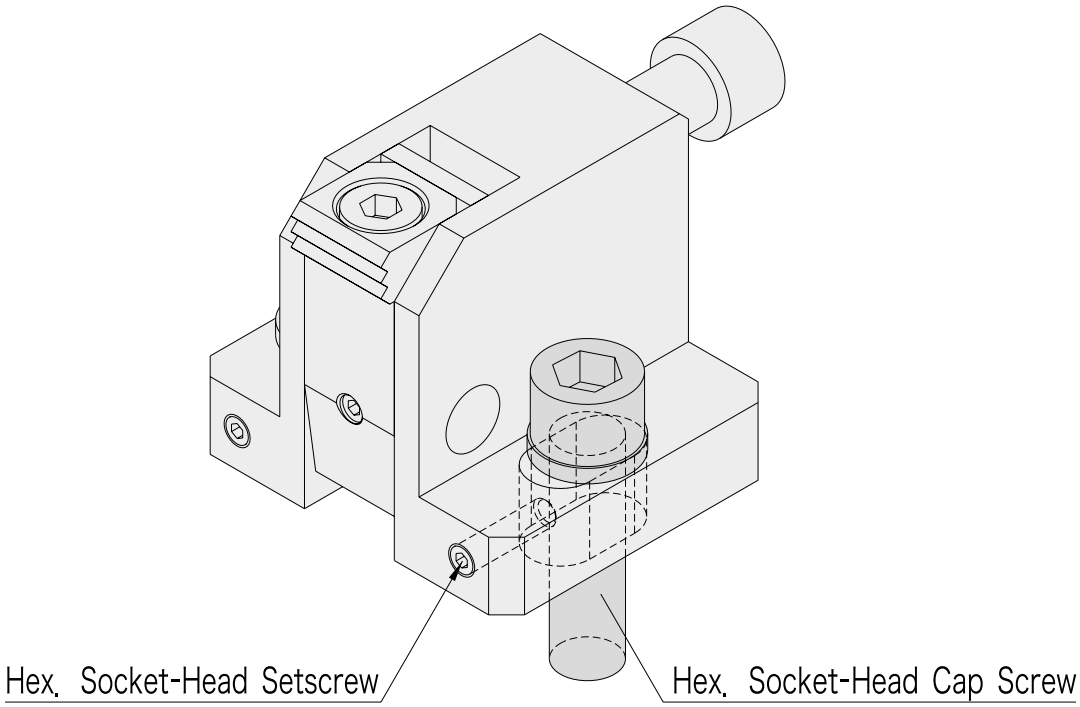

The hex. socket-head setscrew works to prevent the clamp from sliding back if screwedin until it contacts the cap screw.

·Two flat washers are included.

CP102 WIDE-JAW SIDE CLAMPS

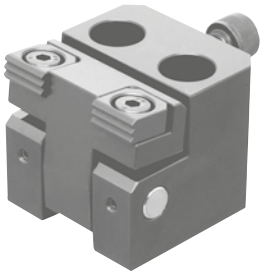

[Body]
Material: S45C steel
Finish : Black oxide

[Arm]
Material: S45C steel
Finish : Black oxide
Heat Treated

[Jaw]
Material: SKH51 steel
Finish : Black oxide
Heat Treated

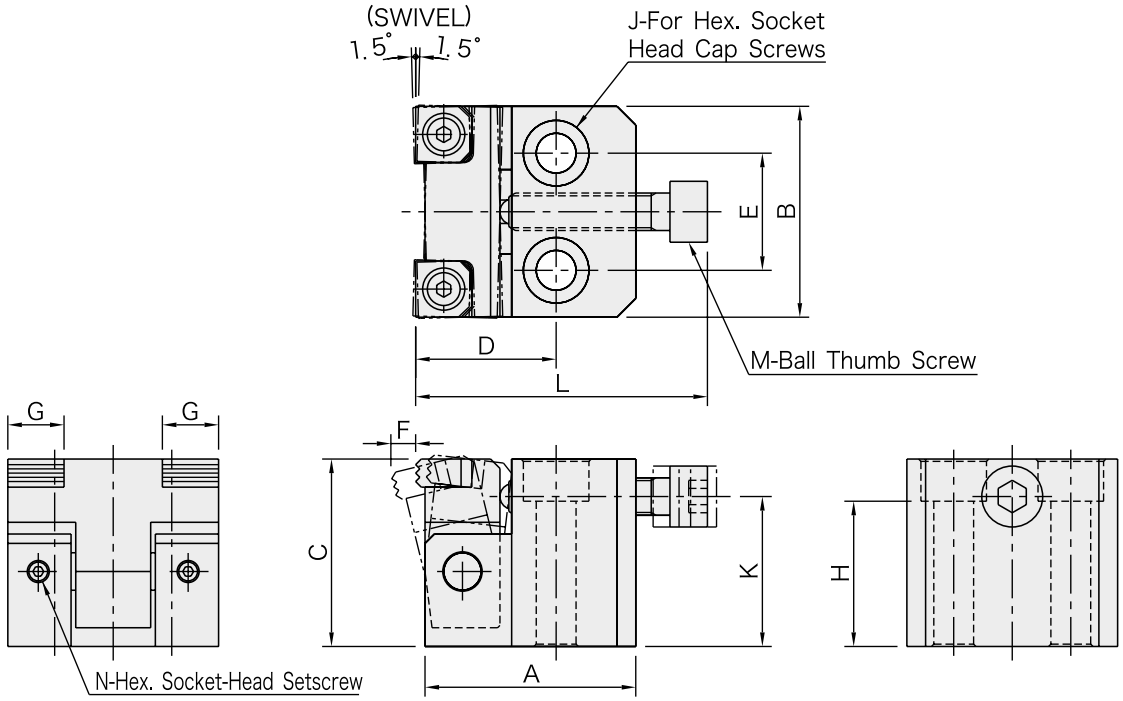

Part Number	A	B	C	D	E	F	G	H	J	K	L	M	N
51991573	45	45	40	30	25	5.3	12	31	M 8	32	62.5	M 8x1.25-35L	M4x0.7-4L
51991574	55	55	50	40	30	7.1	16	39	M10	40	74	M10x1.5 -40L	M4x0.7-4L
51991575	65	65	60	45	35	8	20	47	M12	48	91	M12x1.75-50L	M5x0.8-5L

Part Number	Clamping Force (N)	Allowable Screw Torque (N·m)	Weight (kg)
51991573	11,000	25	0.55
51991574	18,000	50	1
51991575	25,000	90	1.69

How To Use

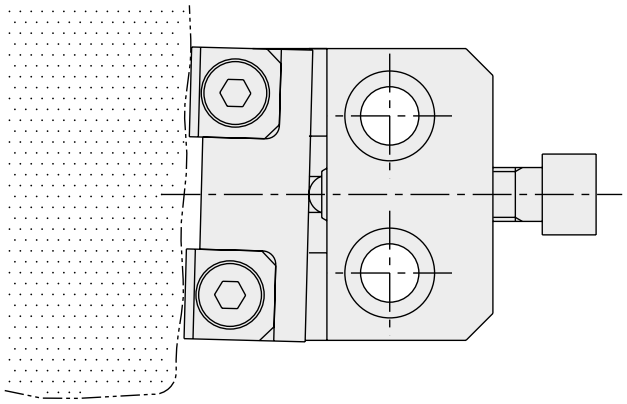

The jaw swivels to fit an unmachined surface of the workpiece.

CP104 TOE CLAMPS

Serrated

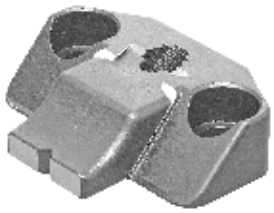

Ground

[Body]
Material: SCM440 steel
Finish : Black oxide
Heat Treated

[Jaw]
Material: SCM440 steel
Finish : Black oxide
Heat treated on edge

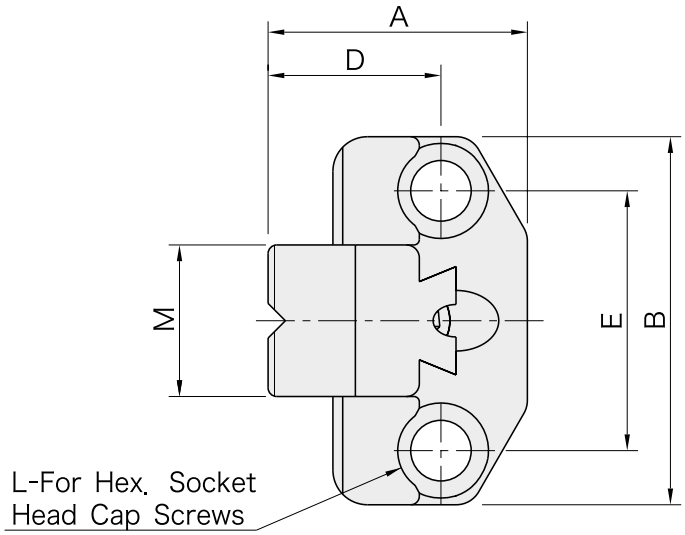

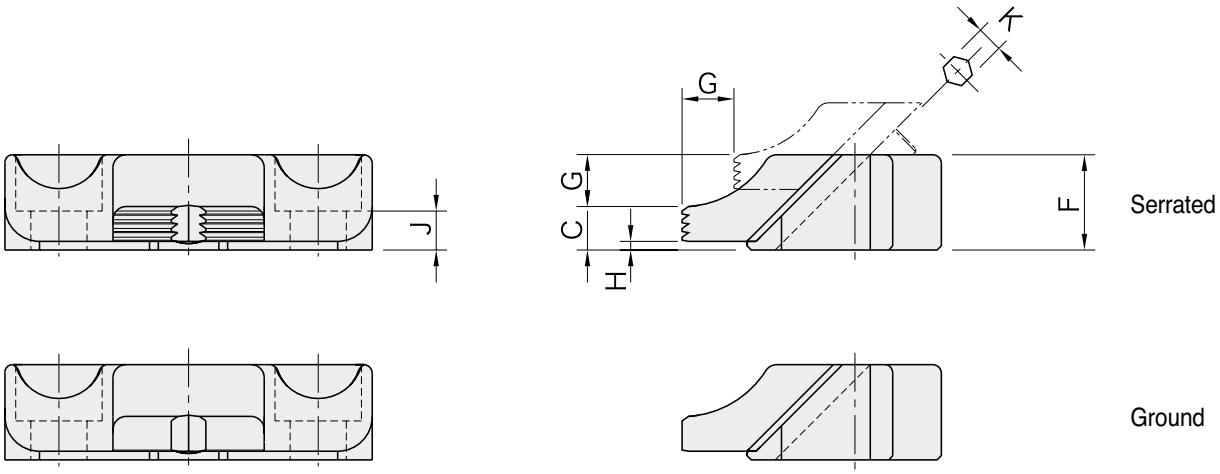

Serrated Part Number	A	B	C	D	E	F	G	H	J	K	L	M	Clamping Force (N)	Allowable Screw Torque (N·m)	Weight (g)
51991576	39.5	65	7.5	25	45	16	7	1.5	7	4	M 8	25	4,000	8	160
51991578	60	85	10	40	60	22	12	2	9	6	M12	35	9,000	26	450
51991580	77	100	14	50	70	30	14	2	13	8	M16	40	17,000	60	900

Ground Part Number	A	B	C	D	E	F	G	H	J	K	L	M	Clamping Force (N)	Allowable Screw Torque (N·m)	Weight (g)
51991577	39.5	65	7.5	25	45	16	7	1.5	7	4	M 8	25	4,000	8	160
51991579	60	85	10	40	60	22	12	2	9	6	M12	35	9,000	26	450
51991581	77	100	14	50	70	30	14	2	13	8	M16	40	17,000	60	900

CP105 SIDE CLAMPS

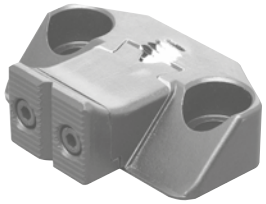

Serrated

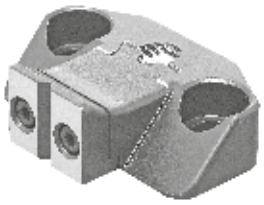

Ground

[Body & Jaw Carrier]
Material: SCM440 steel
Finish : Black oxide
Heat treated

[Jaw]
Material: SCM440 steel
Finish : Black oxide
Heat treated on edge

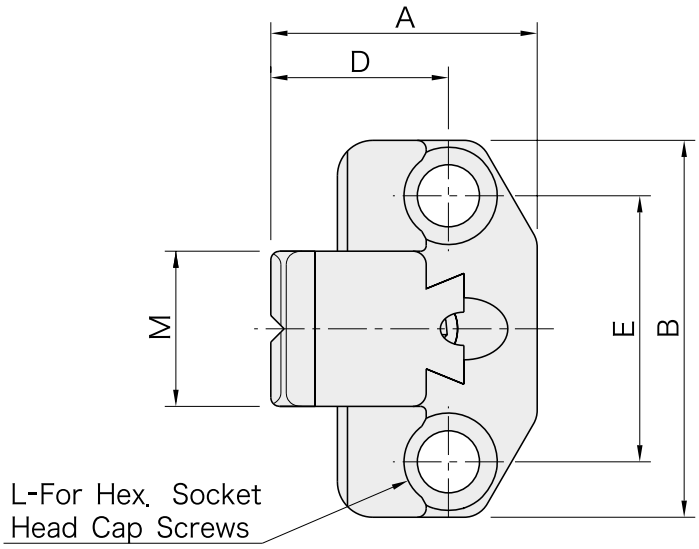

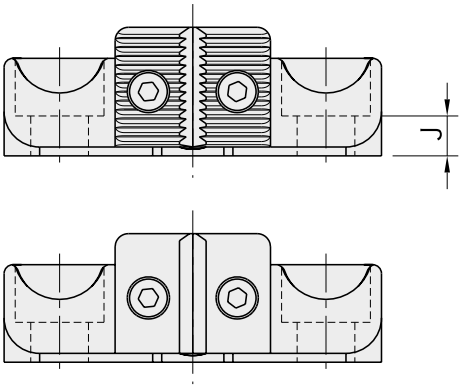

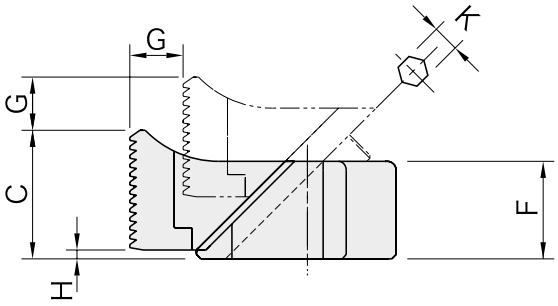

Serrated

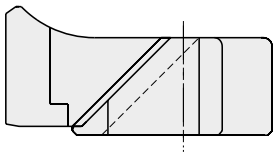

Ground

Serrated Part Number	A	B	C	D	E	F	G	H	J	K	L	M	Clamping Force (N)	Allowable Screw Torque (N·m)	Weight (g)
51991582	39.5	65	19.5	25	45	16	7	1.5	7	4	M 8	25	4,000	8	180
51991584	60	85	29	40	60	22	12	2	9	6	M12	35	9,000	26	500
51991586	77	100	38	50	70	30	14	2	13	8	M16	40	17,000	60	1,010

Ground Part Number	A	B	C	D	E	F	G	H	J	K	L	M	Clamping Force (N)	Allowable Screw Torque (N·m)	Weight (g)
51991583	39.5	65	19.5	25	45	16	7	1.5	7	4	M 8	25	4,000	8	180
51991585	60	85	29	40	60	22	12	2	9	6	M12	35	9,000	26	500
51991587	77	100	38	50	70	30	14	2	13	8	M16	40	17,000	60	1,010

BJ101 ADJUSTABLE TOE CLAMPS

Serrated

Ground

[Body]
Material:FCM440 steel
Heat treated
Black oxide finish

[Sliding Nose]
Material:SCM440 steel
Heat treated (on edge)
Black oxide finish
Precision ground or serrated

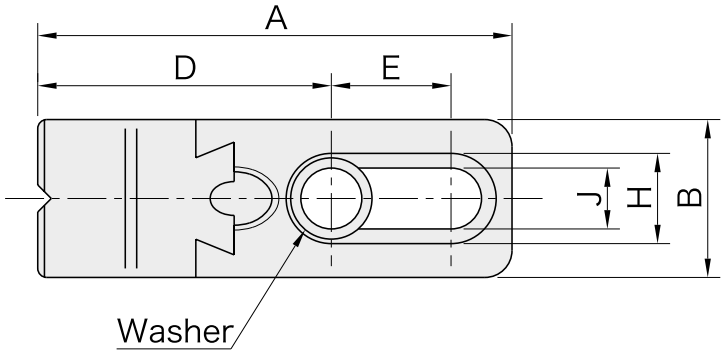

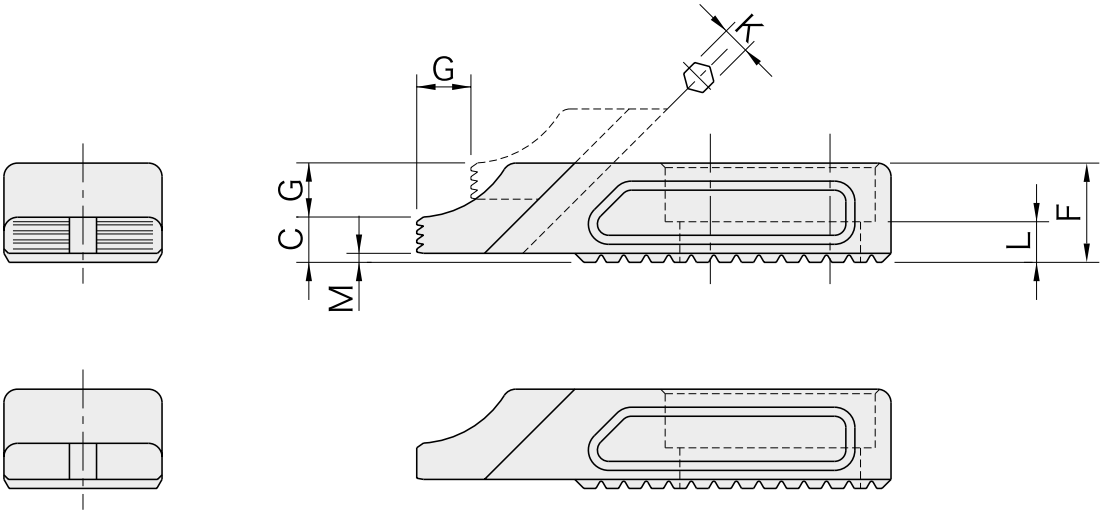

Serrated Part Number	A	B	C	D	E	F	G	H	J	K	L	M	Weight (g)
51991588	72	25	7.5	45.5	16.5	16	7	14	8.5	4	7	1.5	150
51991590	105	35	10	65	26.5	22	12	20	13	6	9	2	400
51991592	137	40	14	89.5	30	30	14	26	17	8	13	2	830

Ground Part Number	A	B	C	D	E	F	G	H	J	K	L	M	Weight (g)
51991589	72	25	7.5	45.5	16.5	16	7	14	8.5	4	7	1.5	150
51991591	105	35	10	65	26.5	22	12	20	13	6	9	2	400
51991593	137	40	14	89.5	30	30	14	26	17	8	13	2	830

Part Number	When Used Singularly		When Used with Slide Stop		Weight (g)
	Clamping Force (N)	Allowable Screw Torque (N•m)	Clamping Force (N)	Allowable Screw Torque (N•m)	
51991588	3,600	6,5	4,000	8	150
51991589					
51991590	7,400	19	10,400	26	400
51991591					
51991592	11,700	32	24,000	60	830
51991593					

BJ102 ADJUSTABLE SIDE CLAMPS

Serrated

Ground

[Body & Jaw Carrier]
Material:FCM440 steel
Heat treated
Black oxide finish

[Jaw]
Material:SCM440 steel
Heat treated
Black oxide finish
Precision ground or serrated

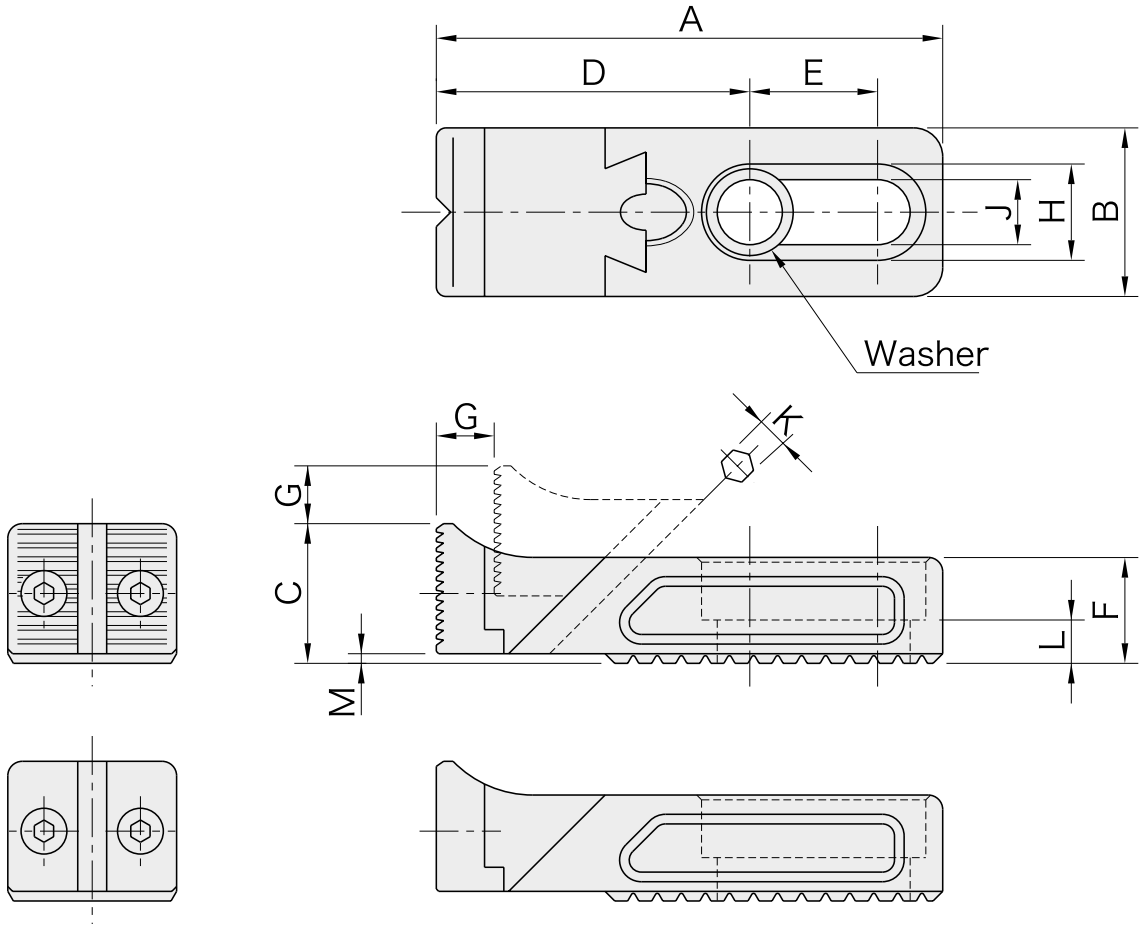

Serrated Part Number	A	B	C	D	E	F	G	H	J	K	L	M	Weight (g)
51991594	72	25	19.5	45.5	16.5	16	7	14	8.5	4	7	1.5	160
51991596	105	35	29	65	26.5	22	12	20	13	6	9	2	440
51991598	137	40	38	89.5	30	30	14	26	17	8	13	2	920

Ground Part Number	A	B	C	D	E	F	G	H	J	K	L	M	Weight (g)
51991595	72	25	19.5	45.5	16.5	16	7	14	8.5	4	7	1.5	160
51991597	105	35	29	65	26.5	22	12	20	13	6	9	2	440
51991599	137	40	38	89.5	30	30	14	26	17	8	13	2	920

Part Number	Clamping Force (N) *)	Allowable Screw Torque (N•m) *)	Weight (g)
51991594	3,600	6,5	160
51991595			
51991596	7,400	19	440
51991597			
51991598	11,700	32	920
51991599			

Note *) The stated values are effective when used singularly (not mounted on a serrated adaptor).

BJ201 ADJUSTABLE TOE STOPS

Serrated

【Body】
- ■Material : FCM440 steel
- ■Black oxide finish

【Jaw】
- ■Material : SCM440 steel
- ■Heat treated
- ■Black oxide finish
- ■Precision serrated

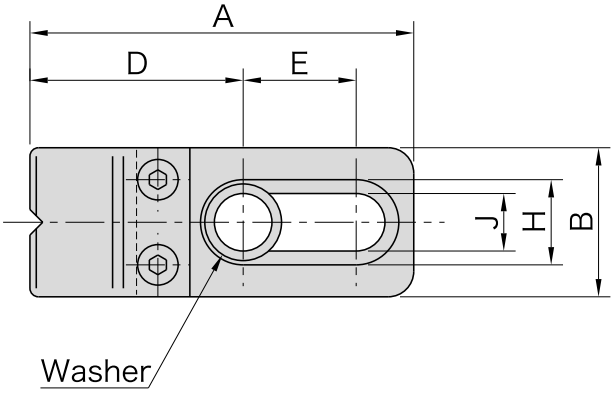

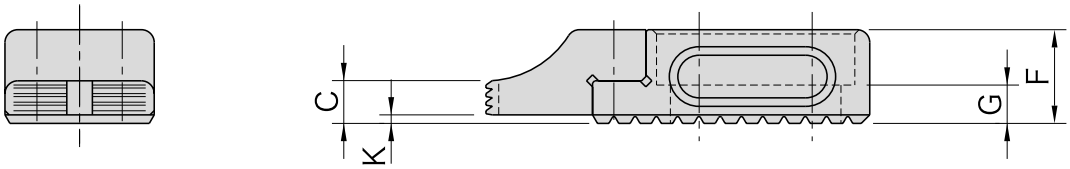

Serrated

Part Number	A	B	C	D	E	F	G	H	J	K	Weight (g)
51991600	60	25	7.5	33.5	16.5	16	7	14	8.5	1.5	120
51991601	90	35	10	50	26.5	22	9	20	13	2	330
51991602	115	40	14	67.5	30	30	13	26	17	2	660

Note *) The stated values are effective when used singularly (not mounted on a serrated adaptor).

・Stop that mounts on a BJ500, Rack Block to prevent backslide.

BJ202 ADJUSTABLE SIDE STOPS

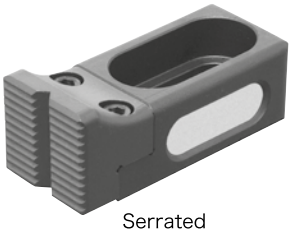

Serrated

【Body】
- ■Material : FCM440 steel
- ■Black oxide finish

【Jaw】
- ■Material : SCM440 steel
- ■Heat treated
- ■Black oxide finish
- ■Precision serrated

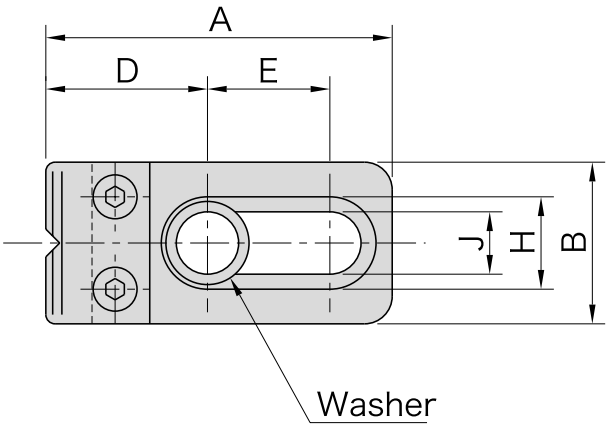

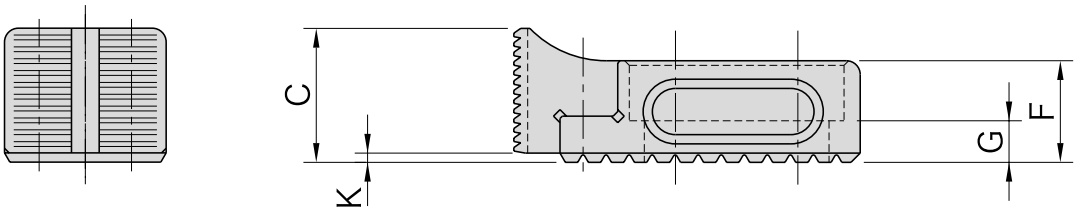

Serrated

Part Number	A	B	C	D	E	F	G	H	J	K	Weight (g)
51991603	50	25	19.5	23.5	16.5	16	7	14	8.5	1.5	100
51991604	75	35	29	35	26.5	22	9	20	13	2	310
51991605	95	40	38	47.5	30	30	13	26	17	2	625

Note *) The stated values are effective when used singularly (not mounted on a serrated adaptor).

・Stop that mounts on a BJ500, Rack Block to prevent backslide.

BJ500 RACK BLOCKS

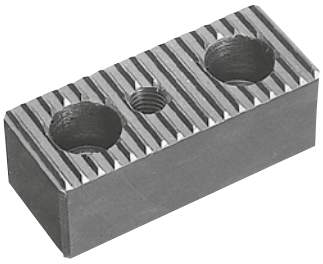

■Material : S45C steel
■Black oxide finish

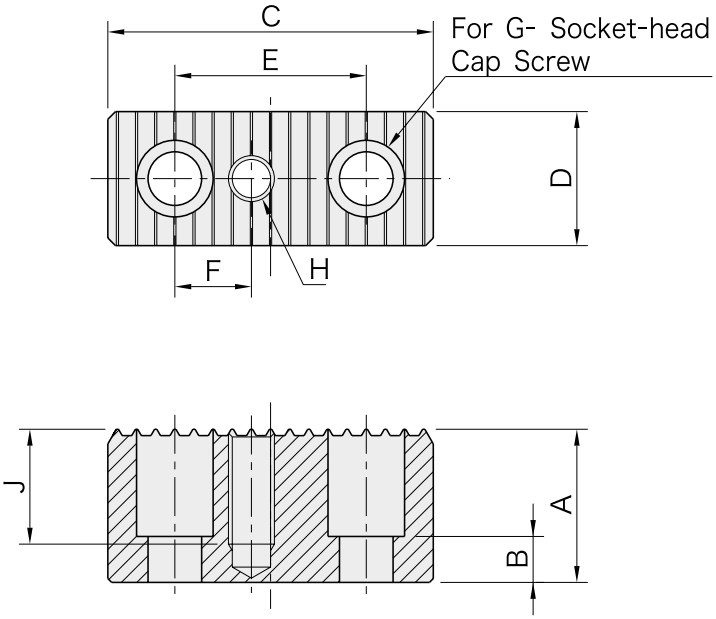

Part Number	A	B	C	D	E	F	G	H	J	Weight (kg)
51991606	16	7	50	25	25	12.5	M 8	M 8×1.25	Through	0.13
51991607	20	9								0.17
51991608	25	13							20	0.21
51991609	32	20								0.27
51991610	40	28								0.33
51991611	50	38								0.42
51991612	20	5	85	35	50	20	M12	M12×1.75	Through	0.34
51991613	25	10								0.45
51991614	32	12								0.57
51991615	40								30	0.71
51991616	50								35	0.9
51991617	25	6	90	40	50	25	M16	M16×2	Through	0.46
51991618	32	13								0.62
51991619	40	15							30	0.78
51991620	50								35	0.98
51991621	63									1.24

■How To Use

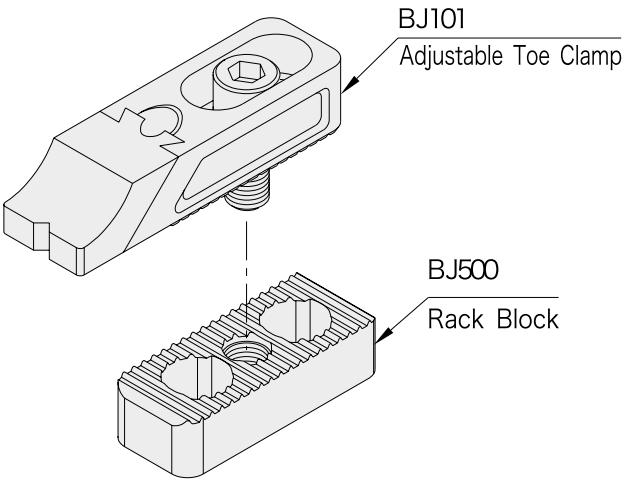

Serrated riser that prevents BJ101/BJ102 clamps and BJ201/BJ202 stops from slipping backward.

CP110 BLOCK PUSH CLAMPS

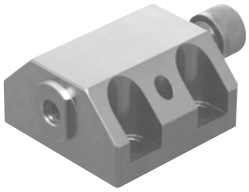

CP110
(Cap Screw Style)

[Body]
Material: S45C steel
Finish : Black oxide

[Piston]
Material: S45C steel
Finish : Black oxide
Heat Treated

[Knurled Knob]
Material: S45C steel
Finish : Black oxide

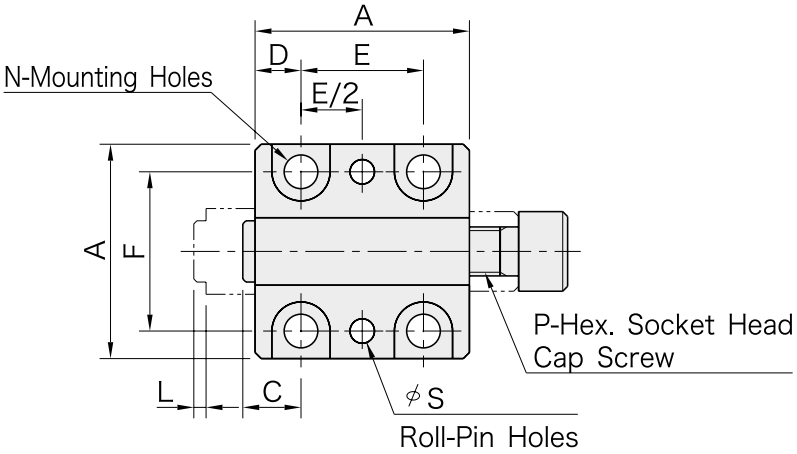

CP110
(Cap Screw Style)

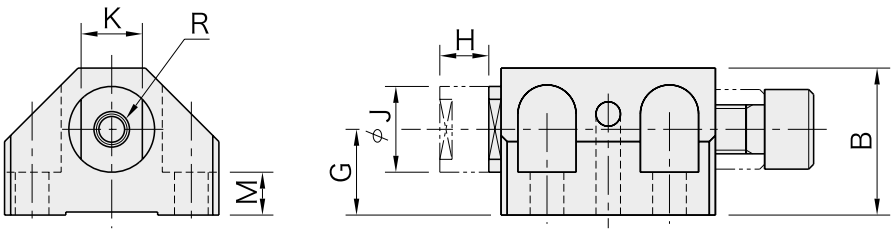

Part Number		A	B	C	D	E	F	G	H	J	K ($^{-0.1}_{-0.3}$)	L	M	N	P	R	S	T	U
51991622		35	24	9.5	7.5	20	26	14	8	14	10	2	7	M 5	M 8x1.25	M 5x0.8 8 Prof.	4	24	14
51991623		45	29	12	10	25	35	16	10	18	12	2	8	M 6	M10x1.5	M 6x1 10 Prof.	4	24	14
51991624		55	31	15	12.5	30	40	18	12	20	14	2.5	8	M 8	M12x1.75	M 8x1.25 12 Prof.	6	30	17
51991625		70	37	18	15	40	50	20	16	25	19	3	8	M10	M16x2	M10x1.5 15 Prof.	8	36	20

Cap Screw Style			
Part Number	Clamping Force (N)	Allowable Screw Torque (N·m)	Weight (g)
51991622	6 200	10	160
51991623	11 000	22	340
51991624	20 000	48	540
51991625	37 000	121	1 050

How To Use

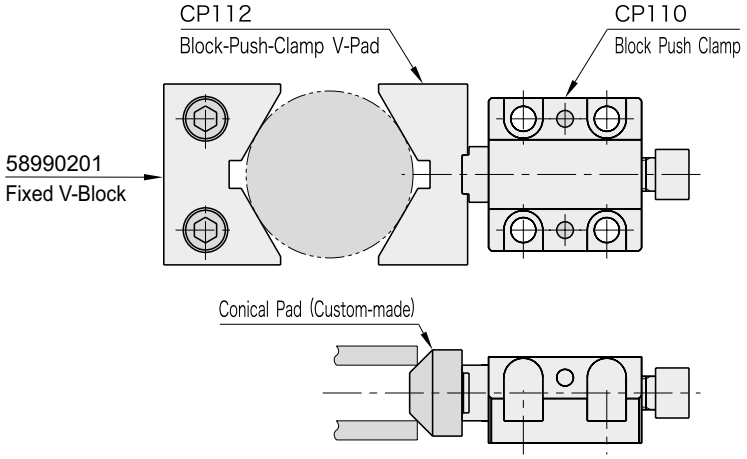

CP112 MOVABLE BLOCK PUSH CLAMP V-PADS

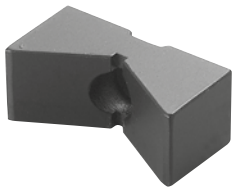

Material: S45C steel
Finish : Black oxide
Heat treated

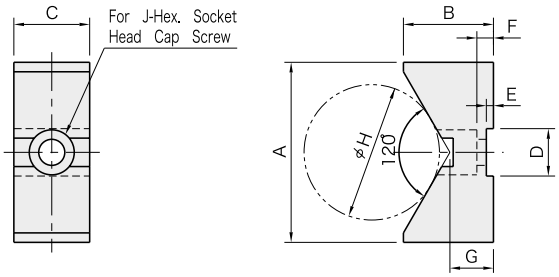

Part Number	A	B	C	D (+0.0 -0.1)	E	F	G	H min.	H max	J	Weight (g)
51991630	38	19	16	10	1.5	3.5	9.2	15	60	M 5	65
51991631	50	24	19	12	1.5	4.5	11	20	80	M 6	125
51991632	65	32	22	14	2	5.5	15	25	100	M 8	250
51991633	75	38	25	19	2.5	7.5	18.7	30	120	M10	390

CP112 F FIXED V-BLOCK PUSH CLAMP

Material: S45C steel
Finish : Black oxide
Heat treated

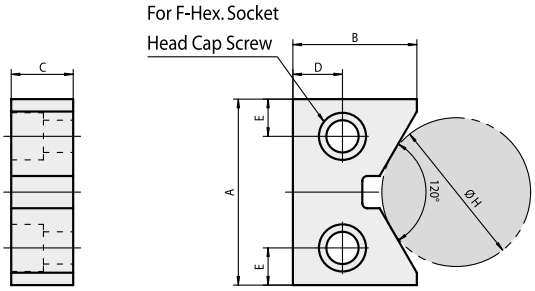

Part Number	A	B	C	D	E	F	H min	H max	Weight (Kg)
58990201	38	25	16	8	8	M6	15	60	0.09
58990202	50	35	19	10	10	M8	20	80	0.19
58990203	65	40	22	12	12	M10	25	100	0.30
58990204	75	50	25	20	15	M12	30	120	0.52

BJ112 REVERSE SCREW SIDE CLAMPS

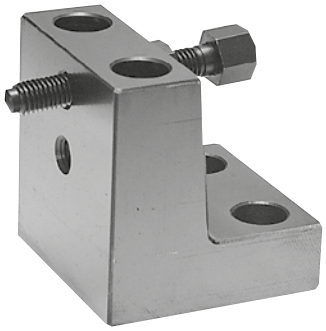

【Body】
■Material : S45C steel
■Black oxide finish

【Screw】
■Material : SCM435 steel
■Heat treated
■Black oxide finish

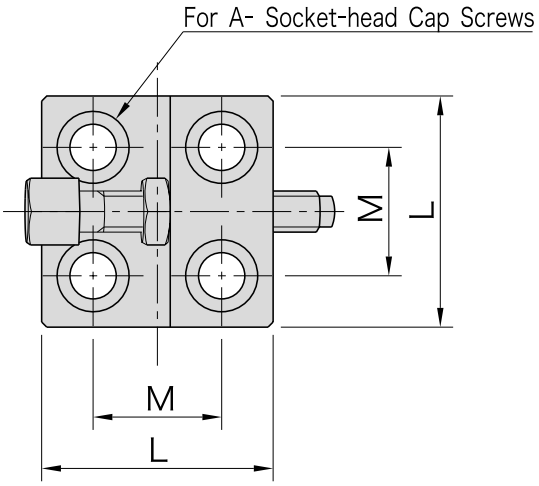

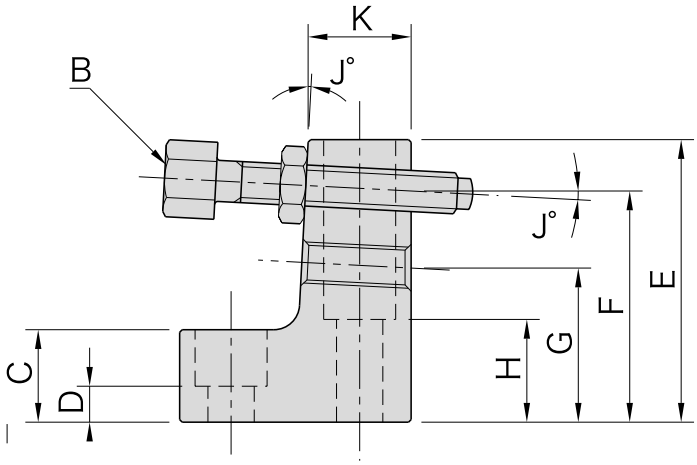

Part Number	A	B	C	D	E	F	G	H	J	K	L	M	Weight (kg)
51991634	M 8	M 8×1.25-50L	18	7	55	45	30	20	3	20	45	25	0.45
51991636	M16	M16×2 -80L	27	10	90	75	50	33	5	33	85	50	2.3

■Application Examples

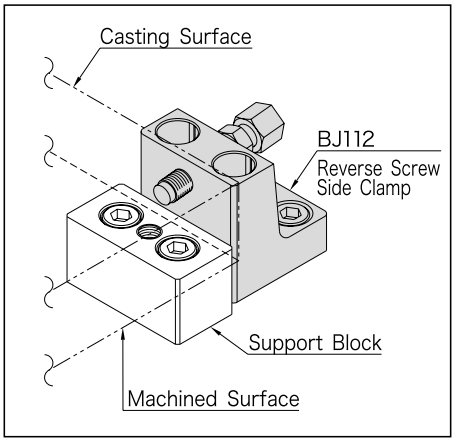

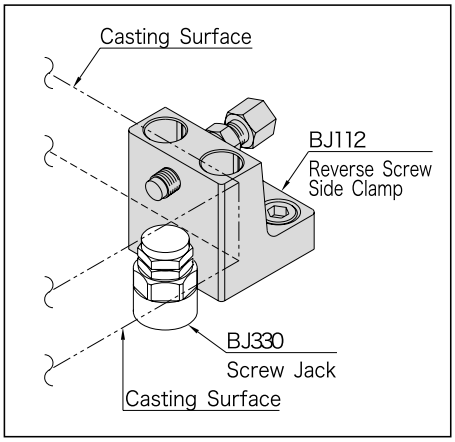

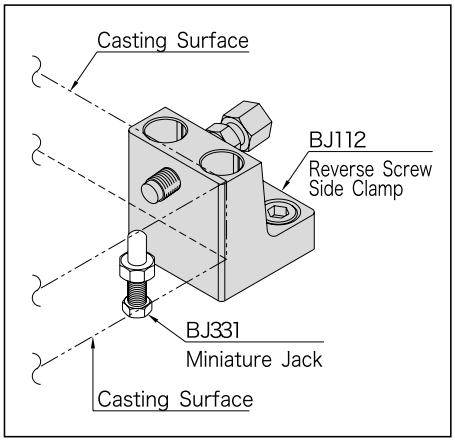

BJ130 HOOK CLAMPS

Material:SCM435 steel
Heat treated
Black oxide finish
Precision ground

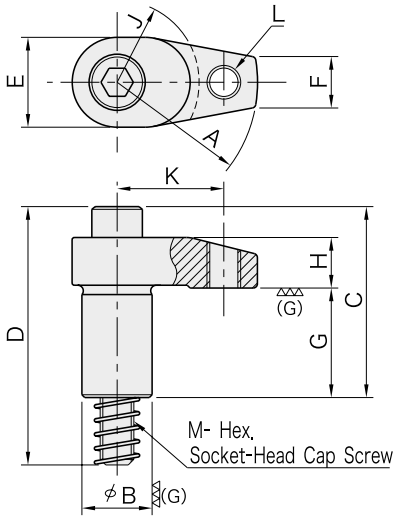

·Use with a BJ530 Hook-Clamp Holder.

How To Use
(Reference)

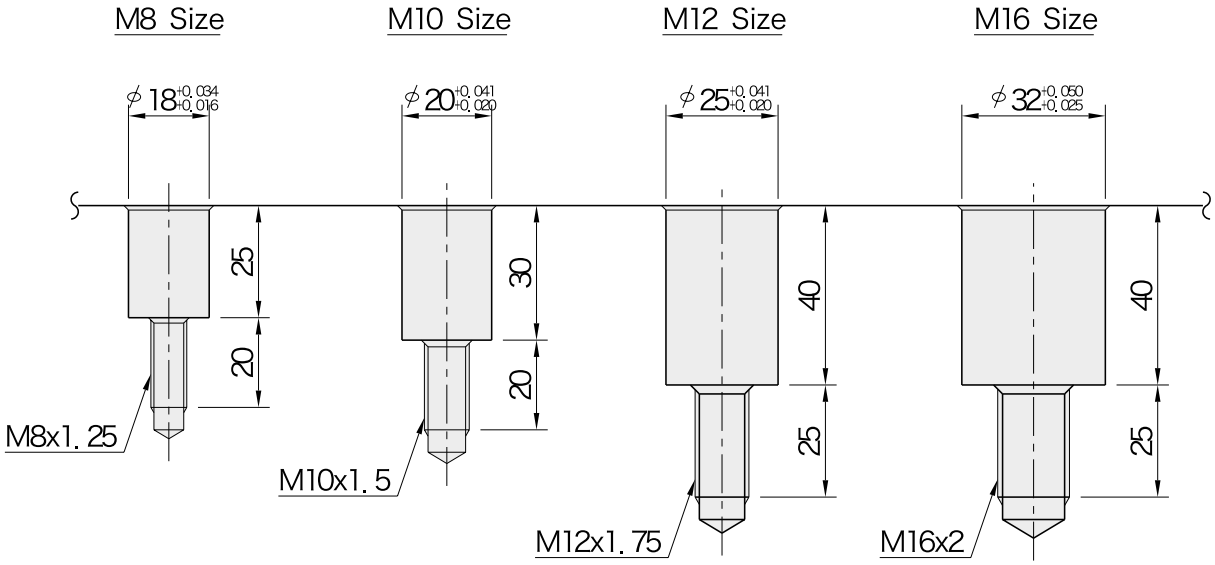

Hook Clamps can be plugged directly into custom blocks with receiving holes as specified above.

Part Number	A	B (h7)	C	D	E	F	G	H	J	K	L	M	Allowable Screw Torque (N·m)	Weight (Kg)
51991637	20	18	37	58	22	10	23	12	15	–	–	M8x1.25 - 50L	38	90
51991638	25												33	95
51991639	30								20				30	105
51991640	30	20	54	75	24	12	30	15	20	–	–	M10x1.5 - 65L	38	200
51991641	40								25				32	210
51991642	40	25	66	92	32	18	39	16	25	–	–	M12x1.75 - 80L	60	280
51991643	50		68					18					50	310
51991644	60												46	350
51991645	40	25	66	92	32	18	39	16	25	31	M12x1.75	M12x1.75 - 80L	60	280
51991646	50		68					18		38			50	310
51991647	60									46			46	350
51991648	40	32	75	101	36	22	39	21	25	–	–	M16x2 - 85L	170	420
51991649	50												150	470
51991650	60												130	530
51991651	50	32	75	101	36	22	39	21	25	38	M12x1.75	M16x2 - 85L	150	470
51991652	60									46			130	530

BJ131 HOOK CLAMPS WITH SPRING

Material:SCM435 steel
Heat treated
Black oxide finish
Precision ground

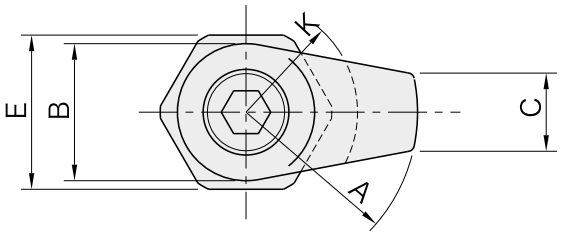

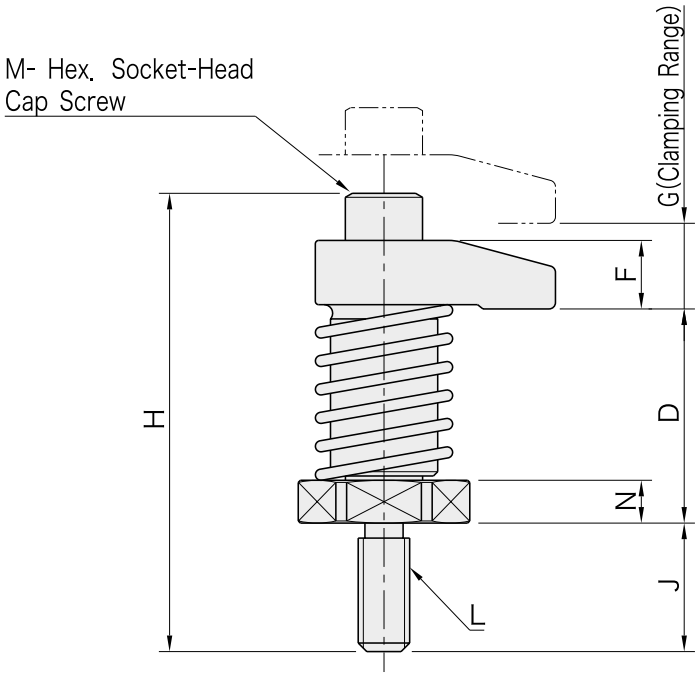

Part Number	A	B	C	D	E	F	G	H	J	K	L
51991655	30	22	10	35	22	12	10	68	19	20	M 8x1.25
51991659	40	32	18	50	36	16	15	107	30	25	M12x1.75
51991660	50					18		109			
51991661	60										
51991665	40	36	22	50	36	21	15	116	30	25	M16x2
51991666	50										
51991667	60										

Part Number	M	N	Clamping Force (N)	Allowable Screw Torque (N·m)	Weight (g)
51991655	M 8x1.25-30L	6	6,700	20	135
51991659	M12x1.75-45L	10	13,500	45	450
51991660			12,600		480
51991661			11,700		520
51991665	M16x2 -55L	10	13,400	60	630
51991666			12,400		680
51991667			12,000		740

BJ530 HOOK CLAMP HOLDERS

Material:S45C steel
Black oxide finish

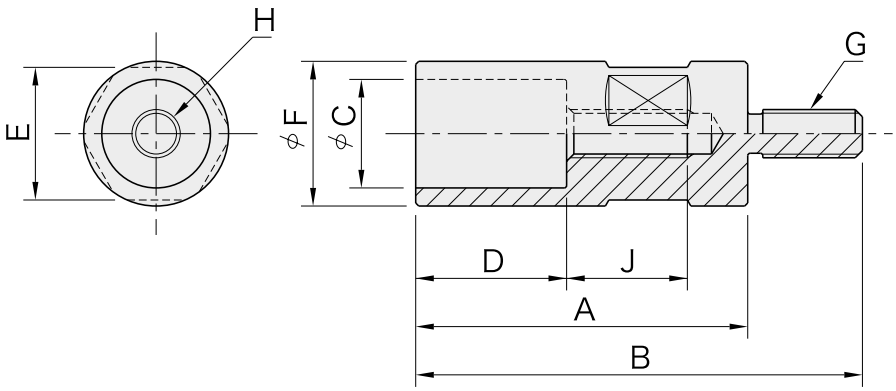

Part Number	A	B	C (F7)	D	E	F	G	H	J	Allowable Screw Torque (N·m) ⁎)	Weight (g)
51991671	55	74	18	25	22	24	M 8x1.25	M 8x1.25	20	30	140
51991672	63	93	20	30	30	32	M12x1.75	M10x1.5	21	40	400
51991673	80	110							23		500
51991674	80	110	25	40	36	40	M12x1.75	M12x1.75	25	50	1,080
51991675	100	130									1,280
51991676	80	110	32	40	46	50	M16x2	M16x2	25	80	1,690
51991677	100	130									2,000

⁎) The above screw torque values are effective for istallation of Hook Clamps.

How To Use

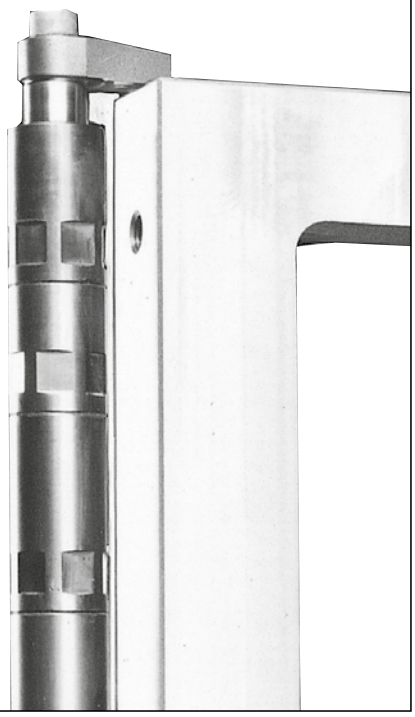

Holder that is specifically designed to receive a BJ130 Hook Clamp.

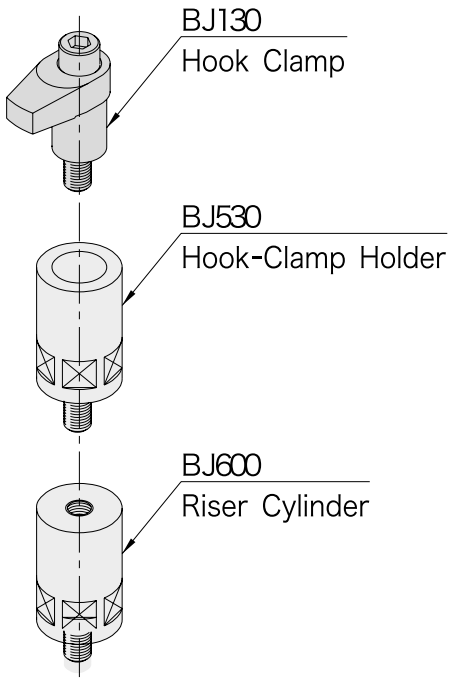

BJ600 RISER CYLINDERS

Material: SCM435 steel(Mini)
S45C steel(Standard&heavy)
Heat treated(Mini)
Black oxide finish

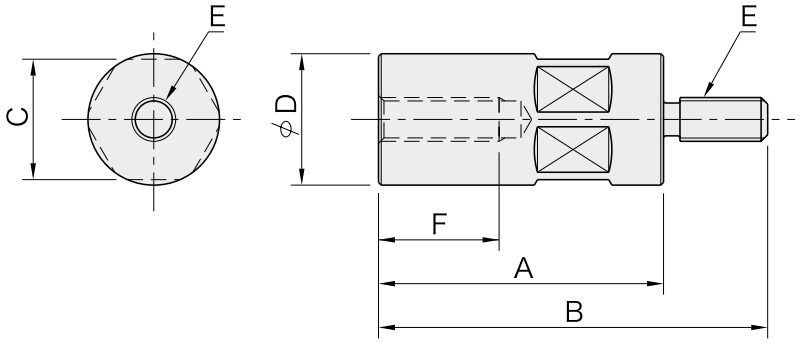

Part Number	A	B	C	D	E	F	Weight (g)
51991678	32	51	22	24	M 8x1.25	20	105
51991679	40	59					135
51991680	50	69					170
51991681	65	84					220
51991684	50	80	36	40	M12x1.75	35	480
51991685	65	95					640
51991686	80	110					780
51991687	100	130					980
51991688	125	155					1,230
51991691	50	80	46	50	M16x2	35	770
51991692	65	95					1,000
51991693	80	110					1,230
51991694	100	130					1,540
51991695	125	155					1,920

BJ210 ADJUSTABLE STOPS

[Body]
Material:S45C steel
Black oxide finish

[Adjustment Screw]
Material:Steel
Heat treated
Black oxide finish

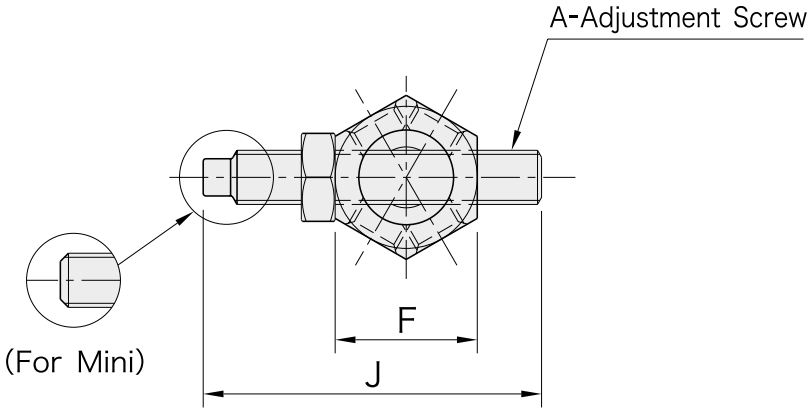

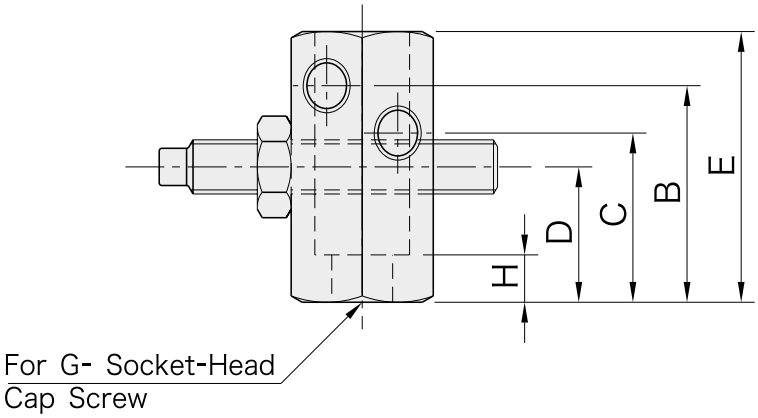

Part Number	A	B	C	D	E	F	G	H	J	Weight (g)
51991698	M 8x1.25	32	25	20	40	21	M 8	7	50	95
51991699	M12x1.75	50	40	32	60	36	M12	12	100	500
51991700	M16x2	63	50	40	80	46	M16	14	100	1,200

・Side stop that offers three options of screw height.
・Can also be used as auxiliary clamps.

BJ211 ADJUSTABLE MINIATURE STOPS

Material:S45C steel
Heat treated
Black oxide finish

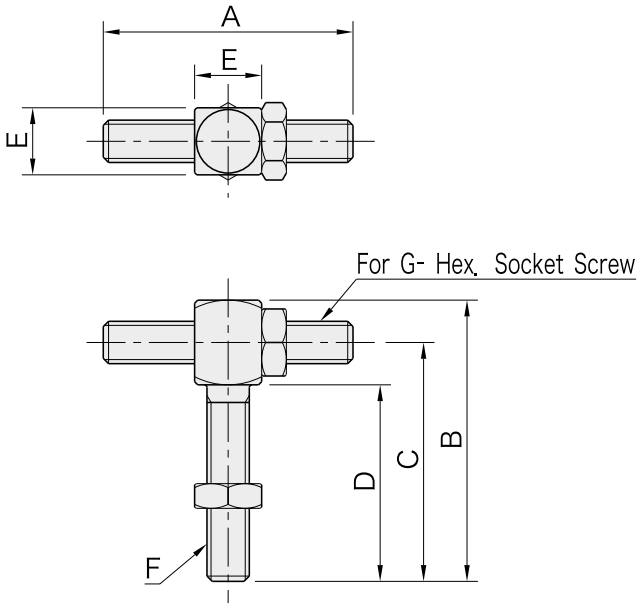

Part Number	A	B	C	D	E	F	G	Weight (g)
51991213	40	56	48	40	13	M 8x1.25	M 8x1.25	60
51991214	50	70	60	50	17	M10x1.5	M10x1.5	120
51991215	60	84	72	60	19	M12x1.75	M12x1.75	190
51991216	80	112	96	80	24	M16x2	M16x2	410

Application Examples

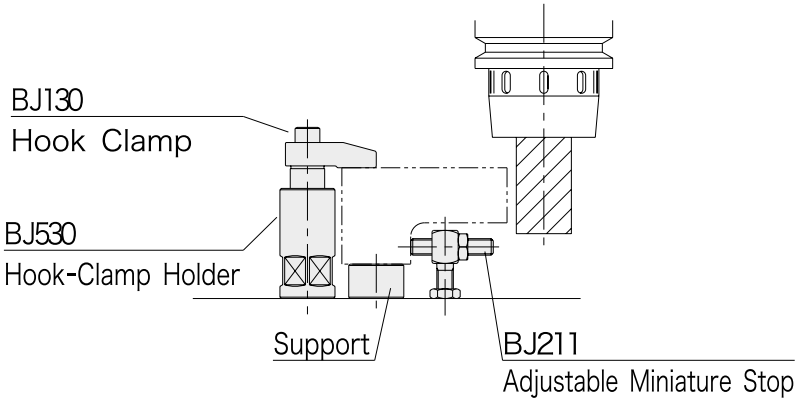

Miniature size allows use in small space.

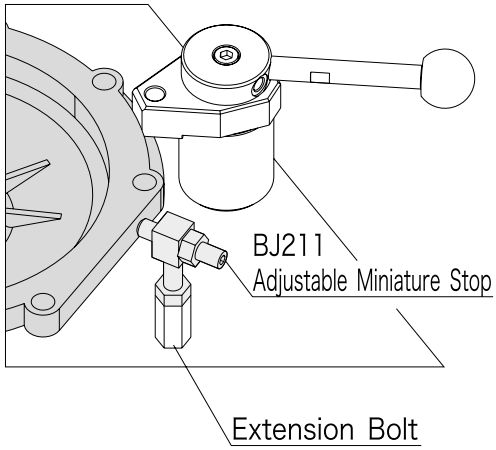

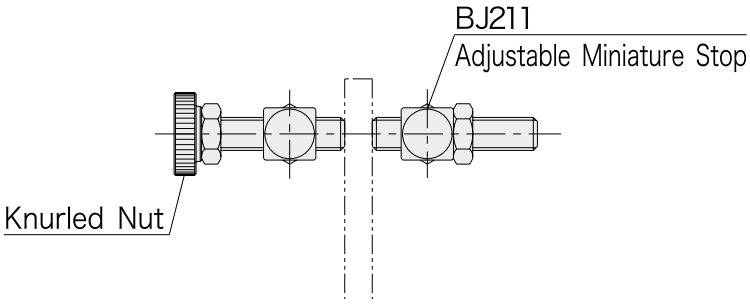

Can be used as auxiliary clamps.

BJ214 SCREW STOP BUTTONS

Material: S45C steel
Finish : Black oxide
Heat treated

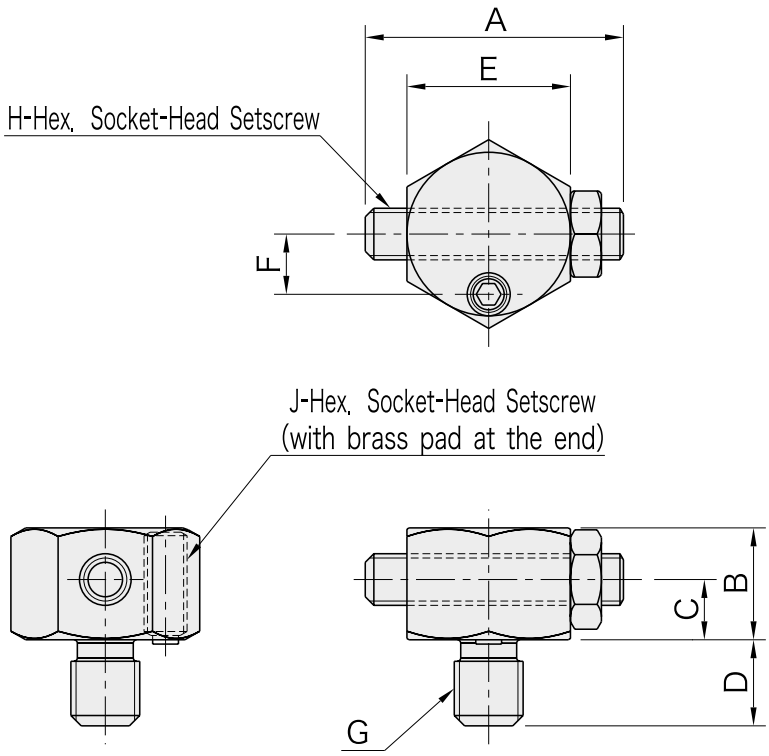

Part Number	A	B	C	D	E	F	G	H	J	Weight (g)
51991701	30	13	7	10	19	7	M 8x1.25	M 6x1	M5x0.8-12L	40
51991702	40	16.5	8.5	12	22	8	M10x1.5	M 8x1.25	M5x0.8-12L	75
51991703	50	21	11	15	24	9	M12x1.75	M10x1.5	M6x1 -20L	120
51991704	60	23	12	20	30	12	M16x2	M12x1.75	M6x1 -20L	210

How To Use

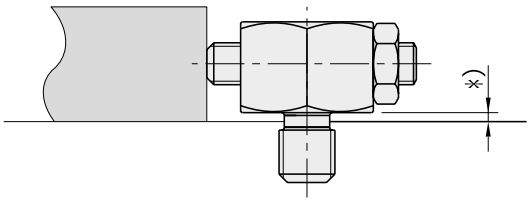

*) Minimize this clearance when installing.

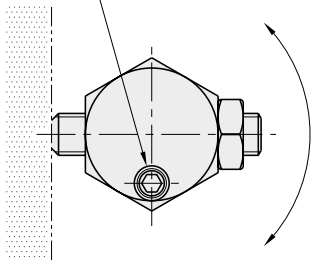

Installation Information
1. Screw in the body completely.
2. Screw back the body and set the adjustment screw.
3. Tighten up the hex. socket-head setscrew to lock the body.

・Use to stop a low-profile workpiece.

BJ360 COMPACT WORK SUPPORTS

[Body]
Material: S45C steel
Finish : Black oxide

[Piston]
Material: SK4 steel
Finish : Black oxide
Heat treated

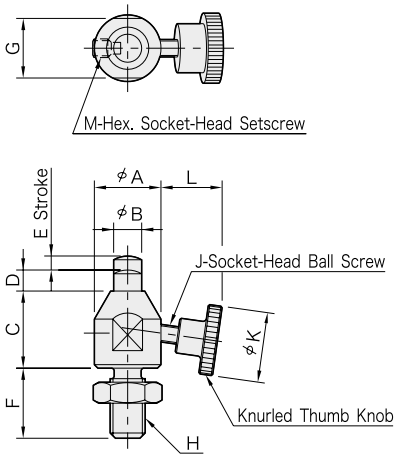

Note) The socket-head ball screw is glued to the knurled thumb knob.

How To Use

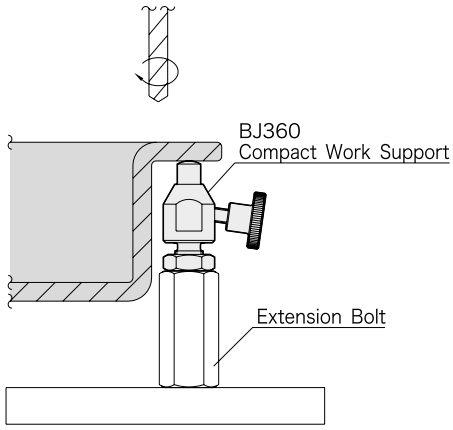

Part Number	A	B	C	D	E	F	G	H	J	K
51991148	15	6	18	5	3	16	13	M 8x1.25	M4x0.7-16L	16
51991149	19	8	22	6	4	20	17	M10x1.5	M5x0.8-20L	20
51991150	22	10	25			24	19	M12x1.75	M6x1 -25L	24

Part Number	L	M	Piston Spring Force (N)	Support Capacity (N)	Weight (g)
51991148	13.2	M4x0.7-6L	1.5 to 3.0	200	36
51991149	16.3		1.8 to 3.0	300	72
51991150	22.3			400	150

BJ350 WORK SUPPORTS

[Body]
Material:S45C steel
Black oxide finish

[Piston]
Material:SK4 steel
Heat treated
Black oxide finish

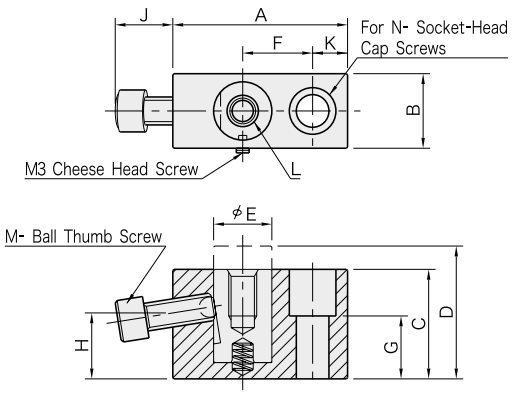

Application Example

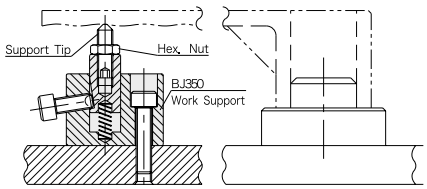

Ideal for preventing the workpiece from chattering and deflecting.

- The positive locking mechanism offers high support capacities.
- The above support capacity values are reached when the ball thumb screw is fully tightened.

Part Number	A	B	C	D	E	F	G	H	J	K
51991152	38	19	29	35	12	15	15	17.6	13	8
51991153	50	22	37	47	16	20	20	21.1	16	10
51991154	65	25	42	52	19	25	20	24.6	18.5	15
51991155	75	32	47	57	25	30	27	28.3	25	15

Part Number	L	M	N	Support Capacity (N)	Piston Spring Force (N)	Weight (g)
51991152	M 6x1 10 deep	M 6x1 -16L	M 6	4,000	0 to 6	150
51991153	M 8x1.25 15 deep	M 8x1.25 -20L	M 8	6,000	0 to 7	285
51991154	M10x1.5 15 deep	M10x1.5 -25L	M10	7,500	1 to 11	480
51991155	M12x1.75 20 deep	M12x1.75 -30L	M12	9,000	1 to 11	800

BJ351 WORK SUPPORT CYLINDERS

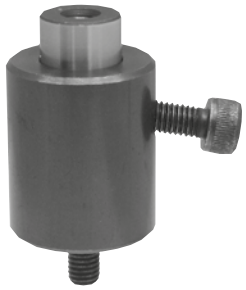

[Body]
Material:S45C steel
Black oxide finish

[Piston]
Material:SK4 steel
Heat treated
Black oxide finish

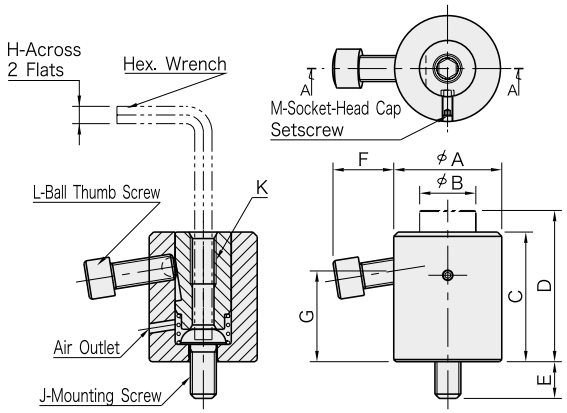

Section A-A

To install, insert a hex. wrench through the piston into the mounting screw.

Application Example

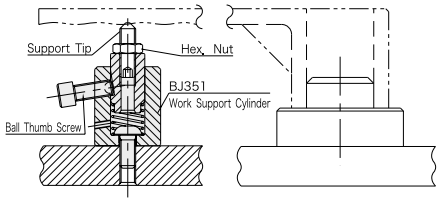

Ideal for preventing the workpiece from chattering and deflecting.

- The positive locking mechanism offers high support capacities.
- The above support capacity values are reached when the ball thumb screw is fully tightened.

Part Number	A	B	C	D	E	F	G	H	J	K
51991156	28	14	33	39	10	13.1	22.2	4	M 6x1	M 6x1 12 deep
51991157	35	19	42	52	14	17.2	27.5	5	M 8x1.25	M 8x1.25 16 deep
51991158	42	22	50	-	14	23.8	34	6	M 10x1.5	M 10x1.5 20 deep
51991159	50	26	60	70	16	28.1	42.1	8	M 12x1.75	M 12x1.75 24 deep
51991160	60	33	70	80	22	26.6	47.4	10	M 16x2	M 16x2 32 deep

Part Number	L	M	Support capacity (N)	Piston Spring Force (N)	Weight (g)
51991156	M 6x1 -16L	M4x0.7 - 8L	4.000	10 ~ 22	150
51991157	M 8x1.25 -20L	M4x0.7 - 8L	6.000	10 ~ 27	300
51991158	M 10x1.5 -25L	-	7.500	14 ~ 28	540
51991159	M 12x1.75 -30L	M5x0.8 - 12L	9.000	15 ~ 30	865
51991160	M 16x2 -30L	M5x0.8 - 12L	9.000	15 ~ 35	1390

CP300 EXTENDABLE WORK SUPPORTS

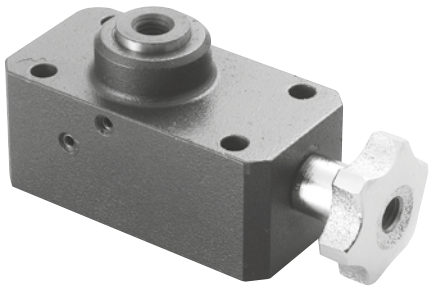

[Body]
Material: S45C steel
Finish : Black oxide

[Piston & Locking Pin]
Material: SK4 steel
Finish : Black oxide
Heat Treated

[Spindle]
Material: S45C steel
Finish : Black oxide
Heat Treated

[Piston Plug]
Material: S45C steel
Finish : Black oxide

[Knob]
Material: FC200 cast iron
Finish : Chrome plated

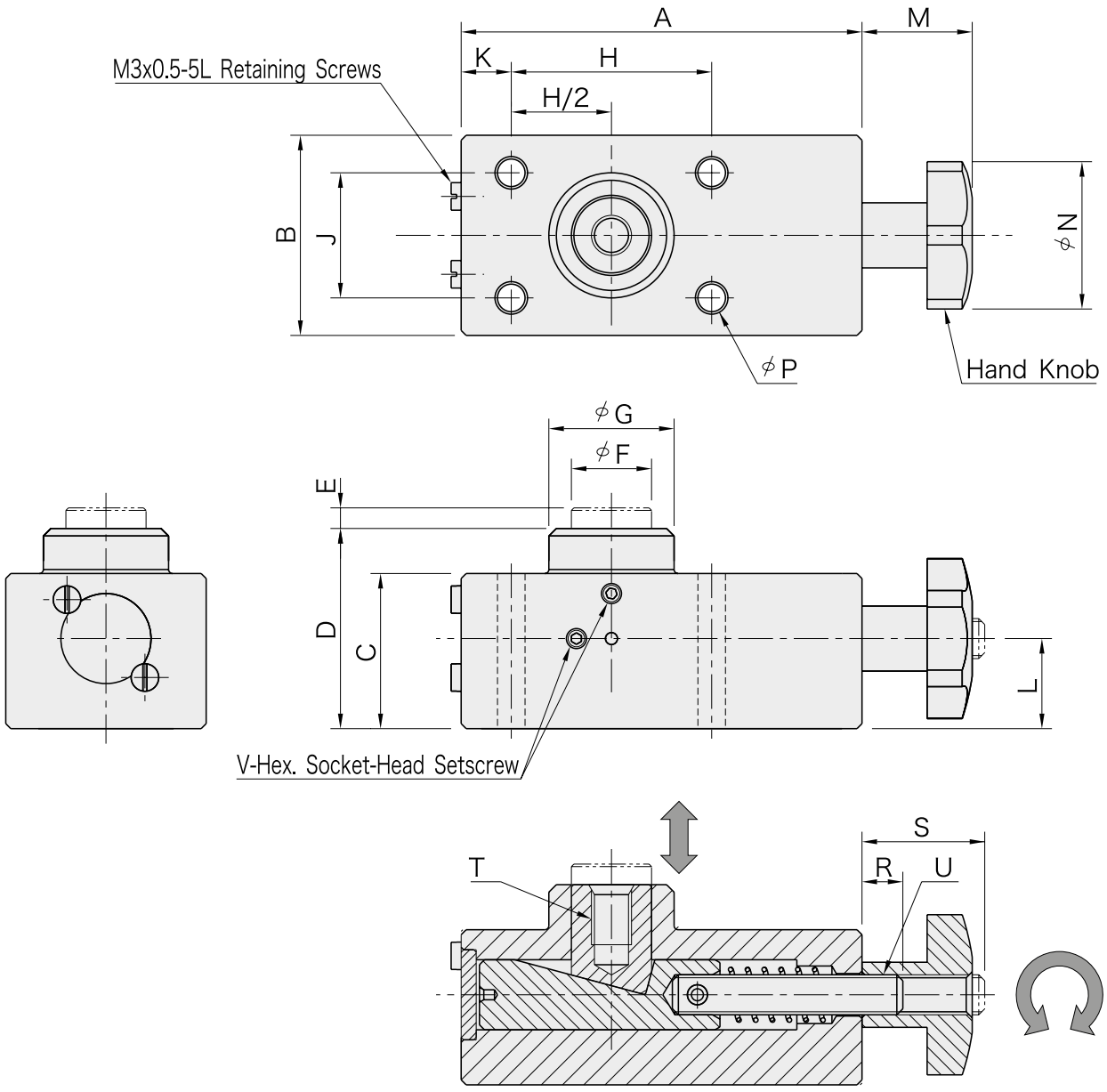

Turning the hand knob clockwise lets the locking pin move upward and turning it counterclockwise lets the locking pin move downward.

Part Number	A	B	C	D	E	F	G	H	J	K	L	M	N	P	R	S
51991709	80	40	31	40	4	16	25	40	25	10	18	22	32	5.5	8	23.5
51991710	95	50	39	50	5	20	32	50	30	10	23	25	40	6.5	9	28
51991711	115	60	47	60	6	24	38	60	40	15	28	32	50	9	12	35.5

Part Number	T	U	V	Support Capacity(N)	Allowable Screw Torque (N·m)	Weight (kg)
51991709	M 8x1.25 12 deep	M 8x1.25	M4x0.7-10L	700	1	0.82
51991710	M10x1.5 15 deep	M10x1.5	M4x0.7-10L	800	1.5	1.52
51991711	M12x1.75 18 deep	M12x1.75	M5x0.8-16L	900	2	2.67

Note : The stated values of both "Support Capacity" and "Allowable Screw Torque" are based on the manual operation of the hand knob.

How To Use

Conventional Method

Cumbersome height adjustment with a wrench
Limited positioning area

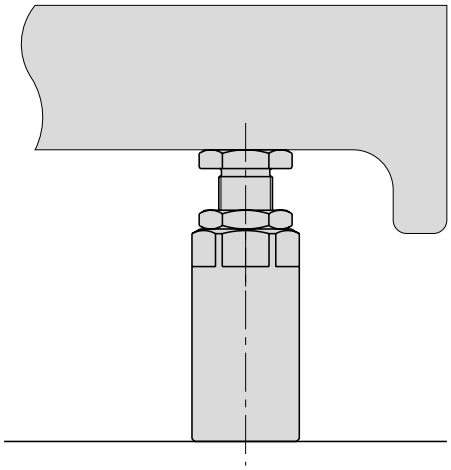

Extendable Work Support Method

Easy height adjustment with a hand knob
Flexible positioning

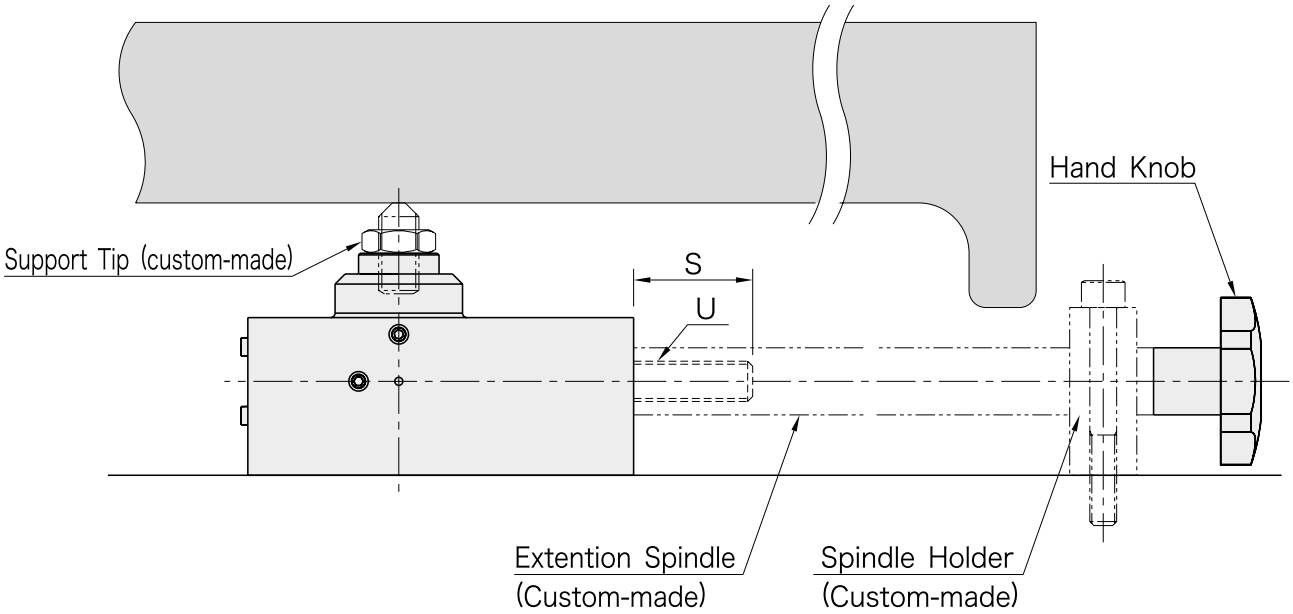

・Connecting an extention spindle allows adjusting the part height with ease.
・Provide a tapped hole for the extention spindle for connection, as specified in chart above.

BJ330 SCREW JACKS

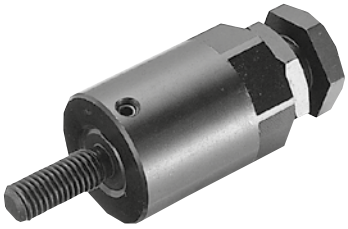

[Body]
Material:S45C steel
Black oxide finish

[Bolt]
Material:SCM435 steel
Heat treated
Black oxide finish

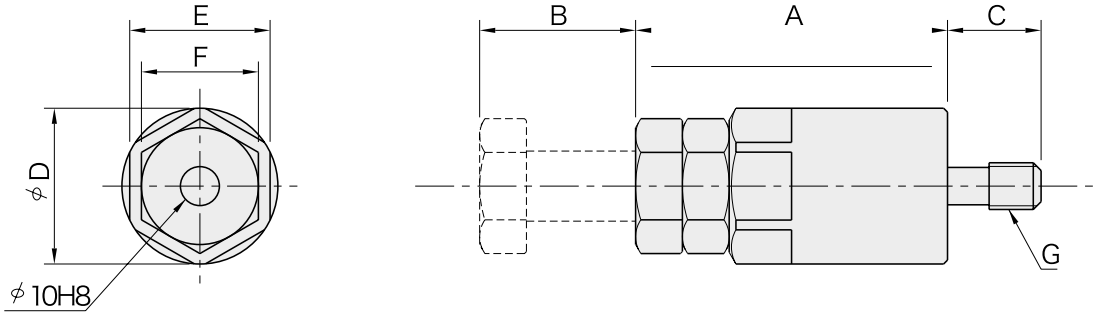

Part Number	A	B	C	D	E	F	G	Load Capacity (N)	Weight (g)
51991712	40	10	30	40	36	30	M12x1.75	31,800	350
51991713	50	20							420
51991714	70	40							570
51991718	50	20	30	40	36	30	M16x2	31,800	430
51991719	70	40							580

BJ733 SCREW-JACK TIP

Material:S45C steel
Heat treated
Black oxide finish

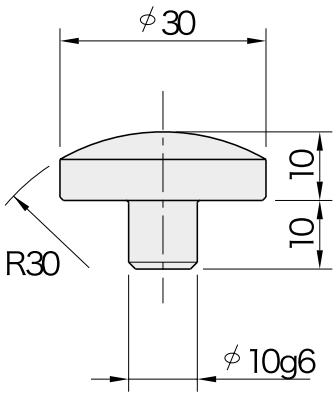

Part Number	Weight (g)
51991722	50

BJ331 MINIATURE JACKS

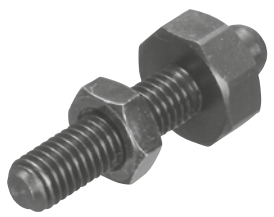

Material:S45C steel
Heat treated
Black oxide finish
Hardness:RC33 - 39

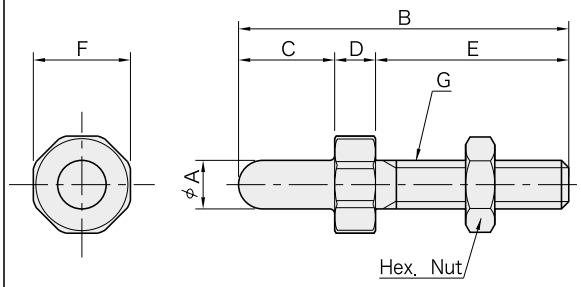

How To Use

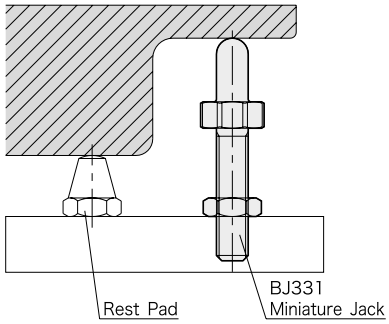

Part Number	A	B	C	D	E	F	G	Weight (g)
51991161	6	37	6	6	25	13	M 6x1	11
51991162		43	12					13
51991163	8	45	8	7	30	17	M 8x1.25	40
51991164		53	16					45
51991165	10	58	10	8	40	19	M10x1.5	60
51991166		68	20					65
51991167	12	72	12	10	50	24	M12x1.75	110
51991168		84	24					120
51991169	16	89	16	13	60	30	M16x2	240
51991170		105	32					265

BJ332 JACK SCREWS

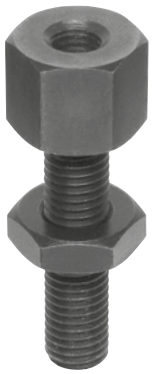

Material: S45C steel
Finish : Black oxide

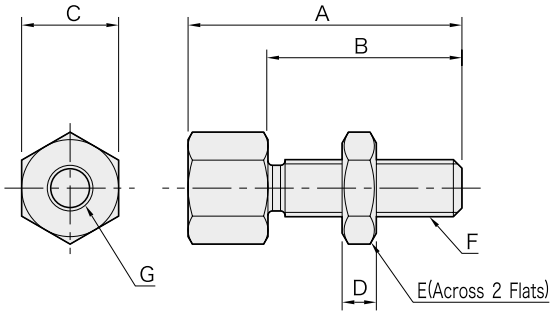

How To Use

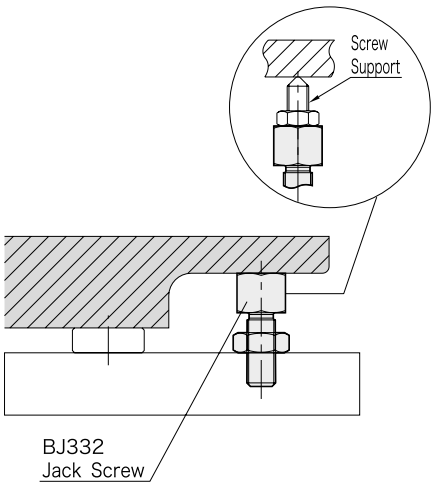

Part Number	A	B	C	D	E	F	G	Weight (g)
51991173	30	20	13	5	13	M 8x1.25	M 6x1 6 deep	20
51991174	40	30						25
51991175	38	24	17	6	17	M10x1.5	M 8x1.25 8 deep	45
51991176	48	34						50
51991177	51	33	22	7	22	M12x1.75	M10x1.5 10 deep	95
51991178	66	48						110
51991179	62	40	27	10	27	M16x2	M12x1.75 12 deep	185
51991180	77	55						210

BJ333 SMALL SCREW JACKS

Material: S45C steel
Finish : Black oxide

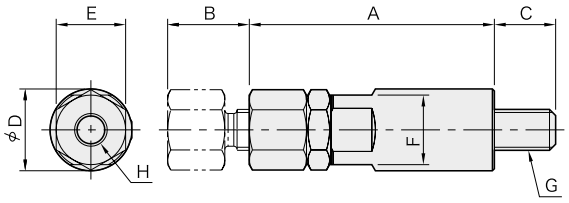

How To Use

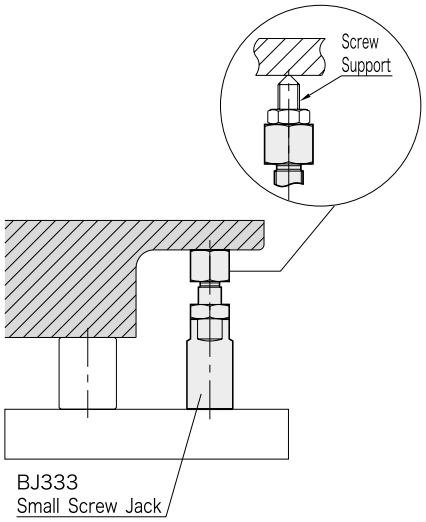

Part Number	A	B	C	D	E	F	G	H	Weight (g)
51991181	40	10	12	16	13	13	M 8 x1.25	M 6x1 6 deep	55
51991182	50	20							70
51991183	50	10	14	20	17	17	M10x1.5	M 8x1.25 8 deep	110
51991184	60	20							135
51991185	65	15	19	24	22	22	M12x1.75	M10x1.5 10 deep	220
51991186	80	30							275
51991187	80	15	24	32	27	27	M16x2	M12x1.75 12 deep	460
51991188	95	30							555

BJ601 SMALL RISER CYLINDERS

Material: S45C steel
Finish : Black oxide

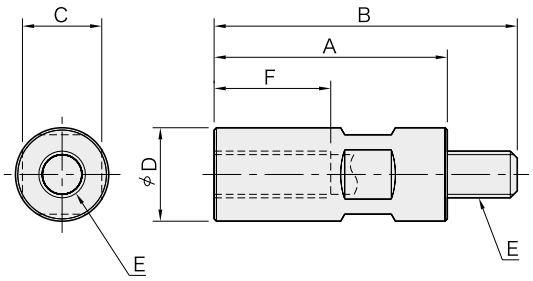

How To Use

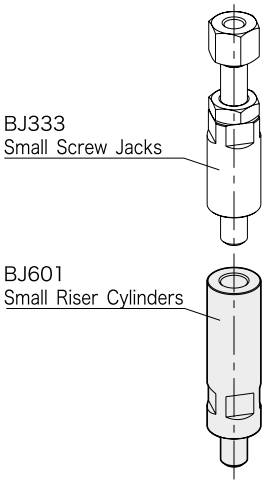

Part Number	A	B	C	D	E	F	Weight (g)
51991189	32	44	13	16	M 8X1.25	18	45
51991190	40	52				20	55
51991191	50	62					70
51991192	65	77					90
51991193	80	92					115
51991194	100	112					145
51991195	40	54	17	20	M10X1.5	23	85
51991196	50	64				25	105
51991197	65	79					145
51991198	80	94					180
51991199	100	114					230

Part Number	A	B	C	D	E	F	Weight (g)
51991201	50	69	22	24	M12X1.75	30	160
51991202	65	84					200
51991203	80	99					255
51991204	100	119					325
51991205	125	144					415
51991206	160	179					540
51991207	50	74	27	32	M16X2	32	280
51991208	65	89				40	350
51991209	80	104					430
51991210	100	124					560
51991211	125	149					715
51991212	160	184					935

BJ300 SUPPORT CYLINDERS

Material:S45C steel
Heat treated
Black oxide finish
Precision ground
Hardness:RC39 - 45

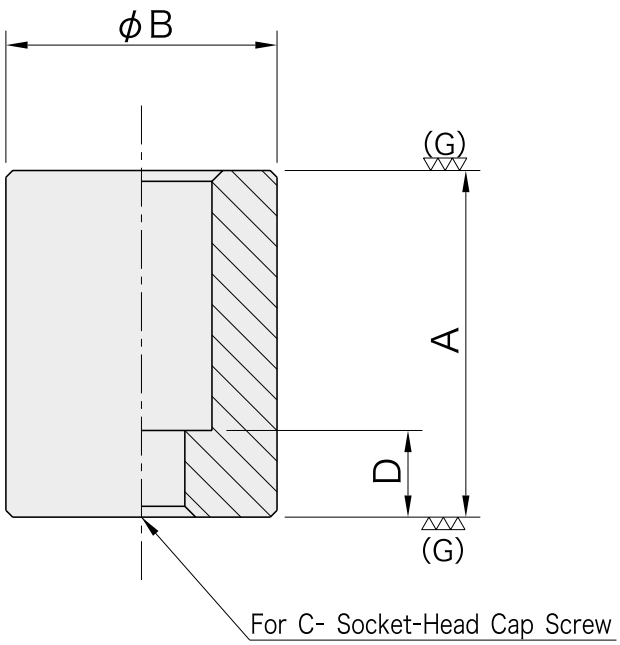

Part Number	A (±0.01)	B	C	D	Weight (g)
51991723	16	25	M 8	7	47
51991724	20				58
51991725	25				71
51991726	32				89
51991727	40				110
51991728	50				136
51991729	20	32	M10	9	97
51991730	25				120
51991731	32				151
51991732	40				186
51991733	50				229
51991734	63				287
51991735	20	40	M12	7	160
51991736	25			12	200
51991737	32				260
51991738	40				330
51991739	50				420
51991740	63				530
51991741	80			22	660
51991742	100				840
51991744	25	50	M16	8	350
51991745	32			15	390
51991746	40				500
51991747	50				630
51991748	63				810
51991749	80			35	1,000
51991750	100				1,260
51991751	125				1,600

BJ650 REMOTE-CONTROL UNITS

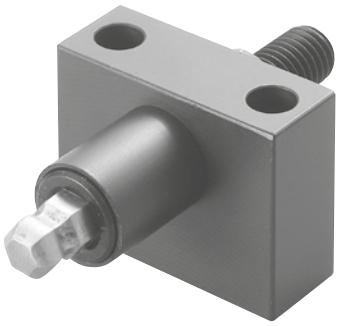

Material: S45C steel
Finish : Black oxide

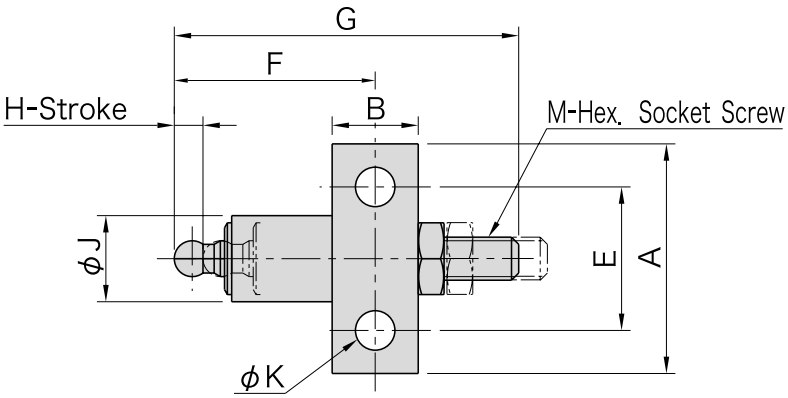

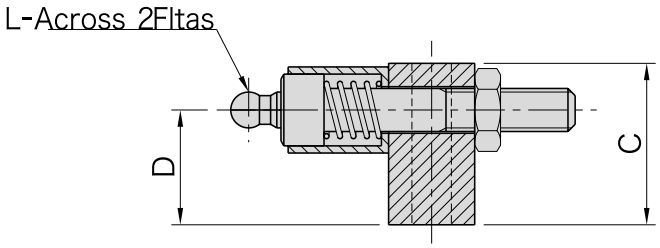

Short

Part Number	A	B	C	D	E	F	G	H	J	K
51991752	32	12	22	16	20	30	48	4	12	5.5
51991753	32	12	27	19.2	20	34	57	4	15	5.5
51991754	44	16	32	22.2	30	45	76	5	18	9
51991755	44	16	36	25.2	30	50	86	5	20	9

Part Number	L	M	Work Supports BJ 350	Weight (g)	Recommended Distance between Work Supprt and Remote-Control Unit A
51991752	5	M 6x1 -35L	**51991152**	75	66
51991753	6	M 8x1.25-40L	**51991153**	100	81
51991754	8	M10x1.5 -55L	**51991154**	210	103
51991755	10	M12x1.75-60L	**51991155**	250	121

Tall

Part Number	A	B	C	D	E	F	G	H	J	K
51991756	32	12	26	20	20	30	48	4	12	5.5
51991757	32	12	33	25.2	20	34	57	4	15	5.5
51991759	44	16	49	38.2	30	50	86	5	20	9
51991760	44	16	54	43.7	30	50	86	5	20	9

Part Number	L	M	Work Supports BJ 351	Weight (g)	A:Recommended Distance between Work Supprt and Remote-Control Unit
51991756	5	M 6x1 -35L	**51991156**	85	52
51991757	6	M 8x1.25-40L	**51991157**	115	62
51991759	10	M12x1.75-60L	**51991159**	310	92
51991760	10	M12x1.75-60L	**51991160**	335	95

BJ730 SWIVEL CONTACT BOLTS

[Body]
Material:S45C steel
Heat treated (M6&M8 sizes)
Black oxide finish

[Ball]
Material:SUJ2
Heat treated

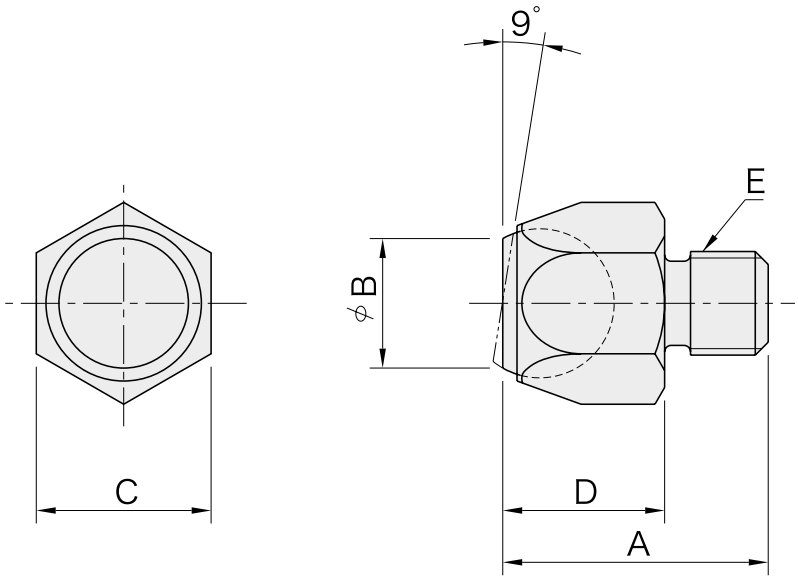

Part Number	A	B	C	D	E	Load Capacity (N)	Weight (g)
51991770	16	7.4	10	9	M 6x1	13,700	12
51991771	21	10.5	13	12	M 8x1.25	25,600	15
51991772	27	12.7	17	16	M10x1.5	40,000	45
51991773	32	15	22	20	M12x1.75	59,400	50
51991774	41	20	27	25	M16x2	96,400	115

Application Example

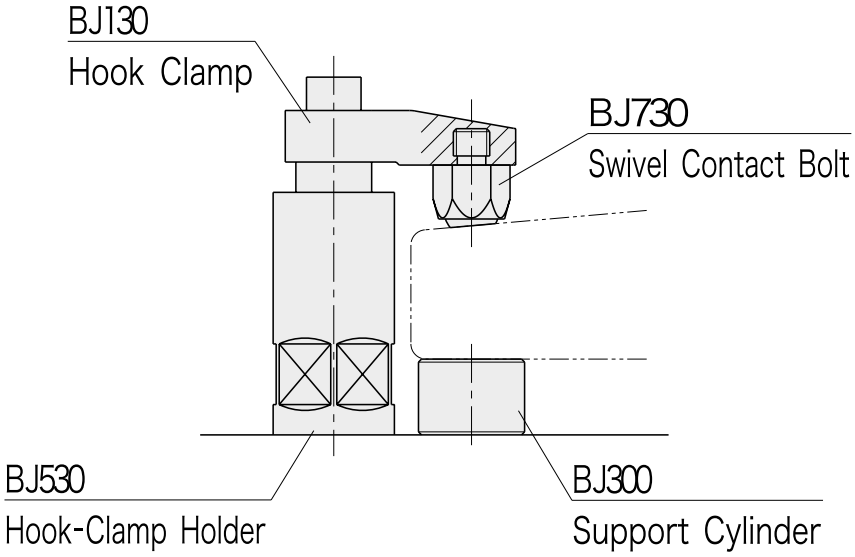

・Use to clamp from above and/or below a workpiece.
・Ball swivel is not limited.

BJ731 TOGGLE PADS

Material:S45C steel
Heat treated (contact surface)
Black oxide finish

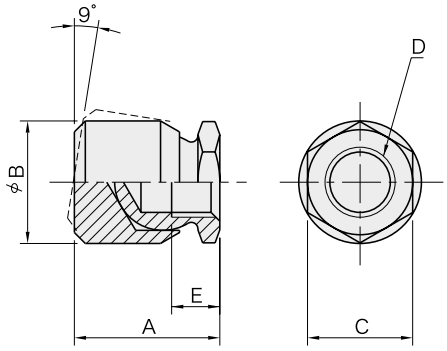

Application Example

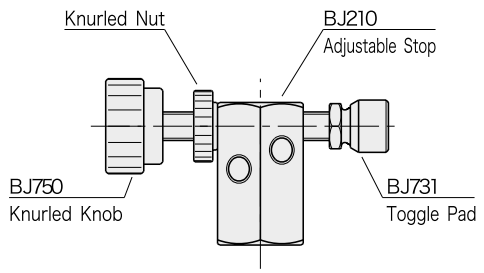

Use to distribute clamping pressure to irregular workpiece surfaces.

Part Number	A	B	C	D	E	Load Capacity (N)		Weight (g)
						Static	Repeated	
51991775	17	15	13	M 8x1.25	6	8,000	5,300	18
51991776	25	22	19	M12x1.75	8	15,900	10,600	60
51991777	33	28	24	M16x2	10	26,700	17,800	130

BJ732 CONTACT BOLTS

Material:SCM435 steel
Heat treated
Black oxide finish
Heat treated on edge

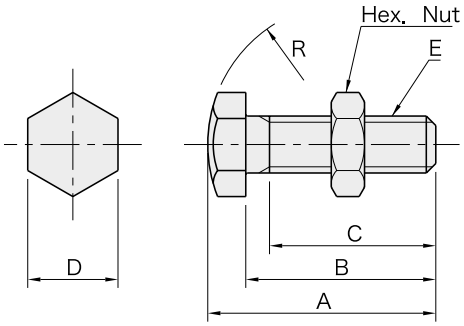

Application Example

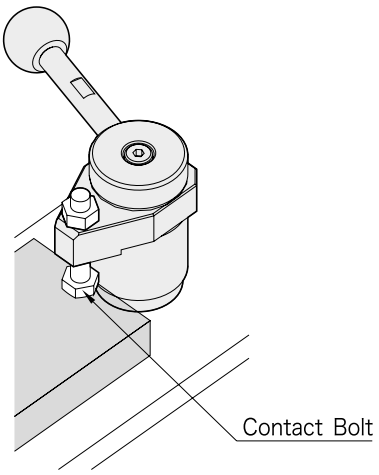

Part Number	A	B	C	D	E	R	Weight (g)
51991235	30	25	22	10	M 6x1	R15	7
51991236	40	35	32				9
51991237	50	45	42				11
51991238	36	30	27	13	M 8x1.25	R17.5	16
51991239	46	40	37				19
51991240	56	50	47				22
51991241	48	40	37	17	M10x1.5	R20	33
51991242	58	50	47				38
51991243	68	60	57				42
51991244	50	40	35	19	M12x1.75	R30	60
51991245	70	60	55				65
51991246	80	70	65				70
51991247	55	45	40	24	M16x2	R35	110
51991248	75	65	60				125
51991249	85	75	70				135

BJ746 SOCKET TOGGLE SCREWS

Material:S45C steel
Heat treated
Black oxide finish

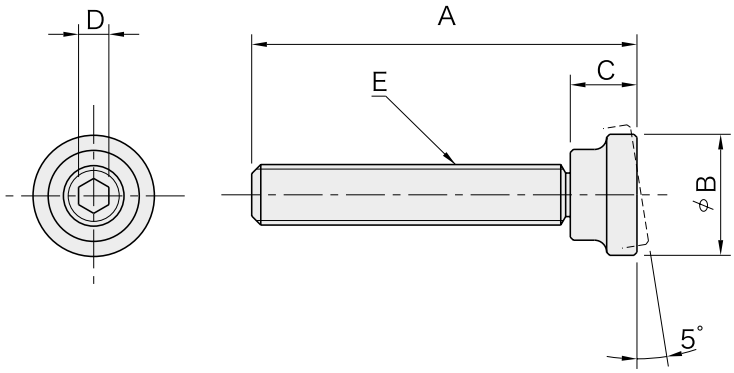

Part Number	A	B	C	D	E	Weight (g)
51991780	43	16	9	4	M 8x1.25	28
51991781	63					37
51991782	83					46
51991783	64	20	11	5	M10x1.5	50
51991784	84					60
51991785	104					70
51991786	65	25	13	6	M12x1.75	75
51991787	85					95
51991788	105					110
51991789	130					130
51991790	85	32	15	8	M16x2	170
51991791	105					190
51991792	130					230
51991793	155					265

BJ748 CLAMP SCREWS

Material:SCM435 steel
Heat treated
Black oxide finish
Hardness:RC33 - 39

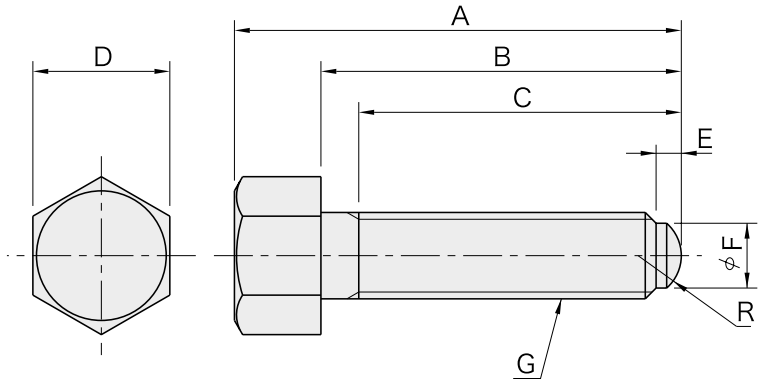

Part Number	A	B	C	D	E	F	G	R	Clamping Force (N)	Allowable Screw Torque (N·m)	Weight (g)
51991800	50	40	37	13	3	5.5	M 8x1.25	R 6	53,000	84	21
51991801	60	50	47								24
51991802	70	60	57								26
51991803	52	40	37	17	3.5	7.5	M10x1.5	R 8	89,000	178	38
51991804	62	50	47								42
51991805	72	60	57								46
51991806	75	60	55	19	5	9	M12x1.75	R 9	100,000	240	70
51991807	95	80	75								80
51991808	115	100	95								95
51991809	140	125	120								115
51991810	100	80	75	24	6	12	M16x2	R12	130,000	417	165
51991811	120	100	95								185
51991812	145	125	120								215

BJ750 KNURLED KNOBS

Material:S45C steel
Finish :Black oxide

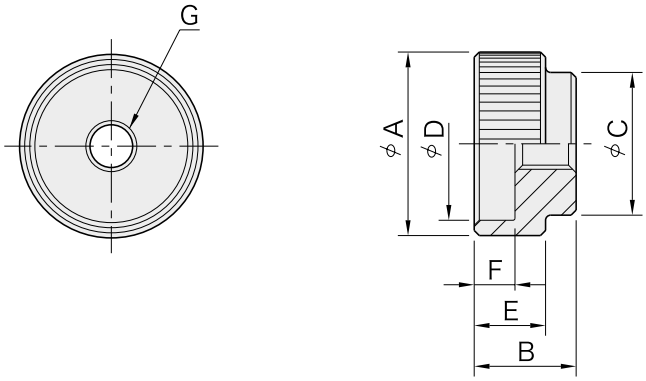

Part Number	A	B	C	D	E	F	G	Weight (g)
51991819	30	17	20	24	12	7	M 8x1.25	50
51991820	36	20	28	30	14	8	M10x1.5	90
51991821	40	24	32	34	16	10	M12x1.75	125

BJ763 FLAT FEET

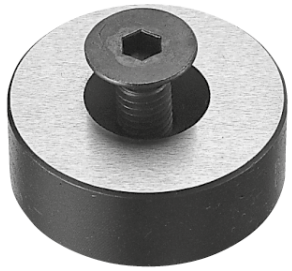

- Material：S45C steel
- Heat treated
- Black oxide finish
- Precision ground
- Hardness：RC39 to 45

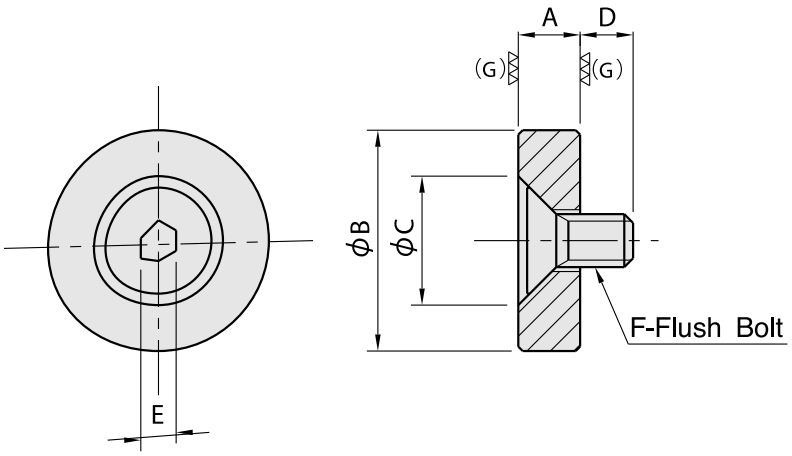

Code	A (+0.01 0)	ϕB	ϕC	D	E	F	Weight (g)
51 99 18 67	5	25	14	7.7	4	M6× 1	20
51 99 18 68		30					30
51 99 18 69		35					40
51 99 18 70	10	25		10.7			40
51 99 18 71		30					60
51 99 18 72		35					80
51 99 18 73	10	30	19.4	11.3	5	M8× 1.25	60
51 99 18 74		35					80
51 99 18 75		40					100
51 99 18 76	15	30					90
51 99 18 77		35					115
51 99 18 78		40					150

Application Example

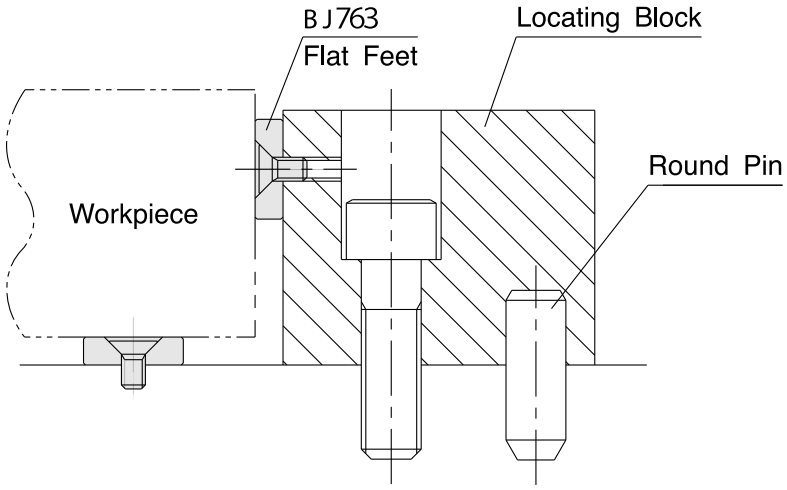

Precision locator that keeps workpieces machined surfaces out of damage.
The accuracy of a locating block with Flat Feet installed can easily be compensated by regrinding the feet.

BJ810 REST PADS

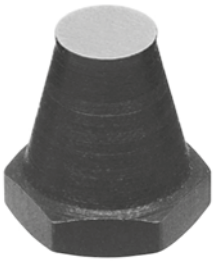

(Ground)

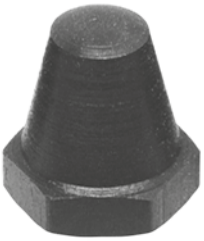

(Round)

(Serrated)

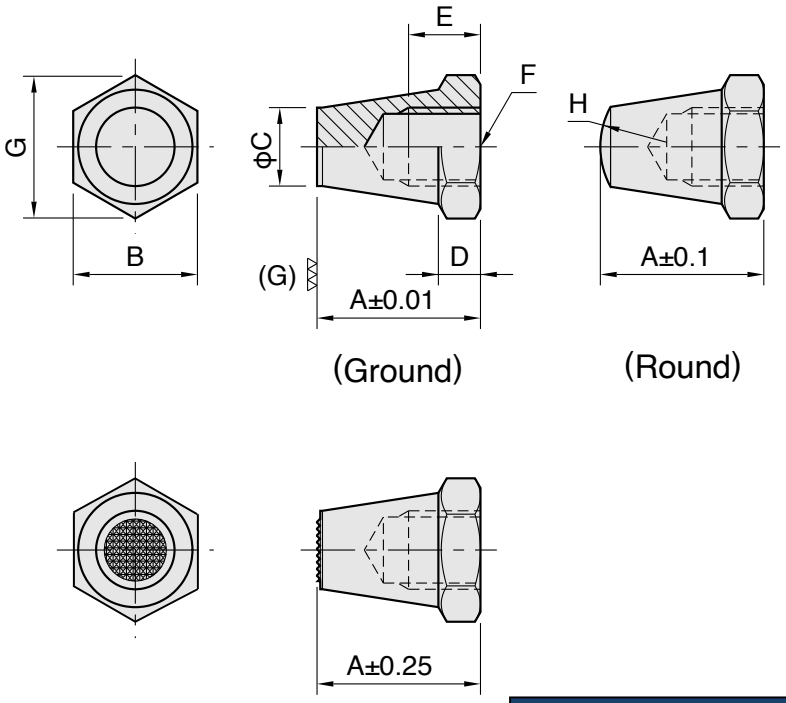

Material&finish

Steel (S15C)
Carburized-hardened
Black oxide finish

Ground code	Round code	Serrated code	A	B	C	D	E	F	G	H	Weight (g)
51 99 18 79	51 99 18 80	51 99 18 81	12.5	11	6	3	4	M 6x1	12.7	5	5
51 99 18 82	51 99 18 83	51 99 18 84	25				7				8
51 99 18 85	51 99 18 86	51 99 18 87	15	13	8	4	6	M 8x1.25	15	8.5	9
51 99 18 88	51 99 18 89	51 99 18 90	30				9				18
51 99 18 91	51 99 18 92	51 99 18 93	20	17	10	5	9	M10x1.5	19.6	9	17
51 99 18 94	51 99 18 95	51 99 18 96	40				13				35
51 99 18 97	51 99 18 98	51 99 18 99	25	19	12	6	11	M12x1.75	21.9	12.8	25
51 99 19 00	51 99 19 01	51 99 19 02	50				16				62

BJ811 SCREW REST BUTTONS

(Ground)

(Round)

(Serrated)

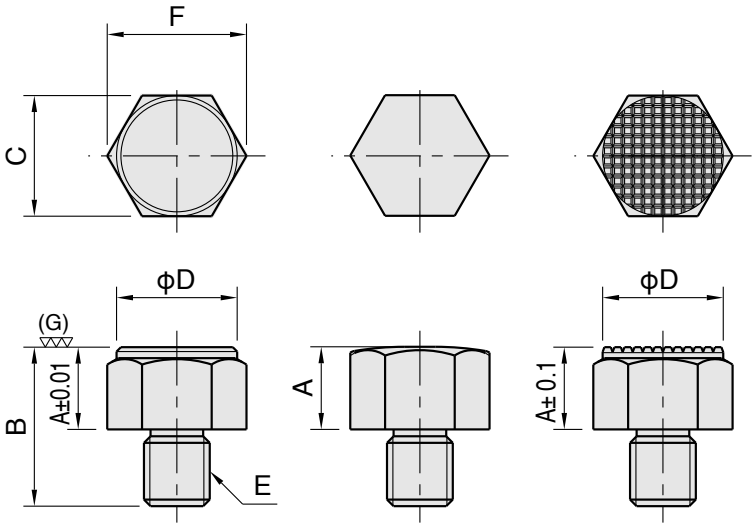

Material&finish

Steel (SUM22L)
Carburized - hardened
Black oxide finish

Ground code	Round code	Serrated code	A	B	C	D	E	F	Weight (g)
51 99 19 03	**51 99 19 04**	**51 99 19 05**	10	20	17	17	M 8x1.25	19.4	24
51 99 19 06	**51 99 19 07**	**51 99 19 08**		24	22	22	M12x1.75	25.2	40
51 99 19 09	**51 99 19 10**	**51 99 19 11**	15	29					56

BJ812 REST BUTTONS

(Ground)

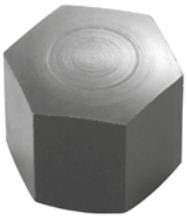

(Round)

(Serrated)

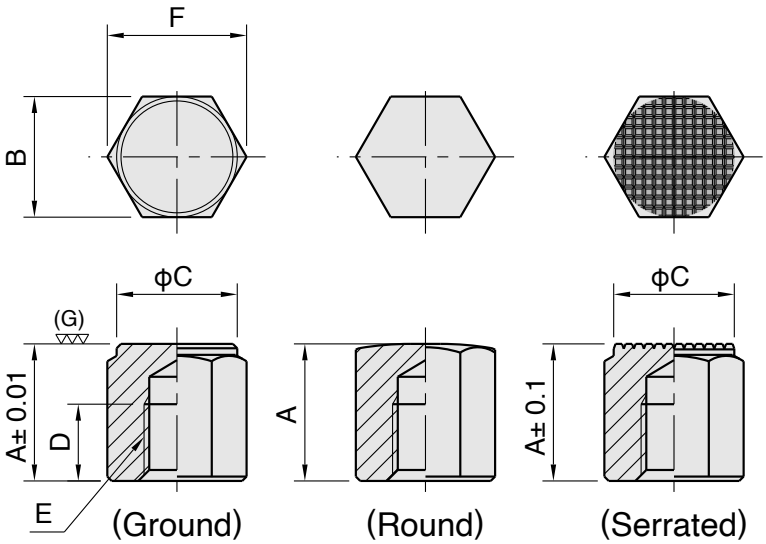

Material&finish
Steel(SUM22L) Carburized-hardened Black oxide finish

Ground code	Round code	Serrated code	A	B	C	D	E	F	Weight (g)
51 99 19 12	51 99 19 13	51 99 19 14	15	17	17	6	M 8x1.25	19.4	23
51 99 19 15	51 99 19 16	51 99 19 17	25			16			40
51 99 19 18	51 99 19 19	51 99 19 20	20	22	22	10	M12x1.75	25.2	52
51 99 19 21	51 99 19 22	51 99 19 23	25			15			65
51 99 19 24	51 99 19 25	51 99 19 26	30			20			77
51 99 19 27	51 99 19 28	51 99 19 29	40			25			105
51 99 19 30	51 99 19 31	51 99 19 32	50						135

BJ760 SCREW REST PADS

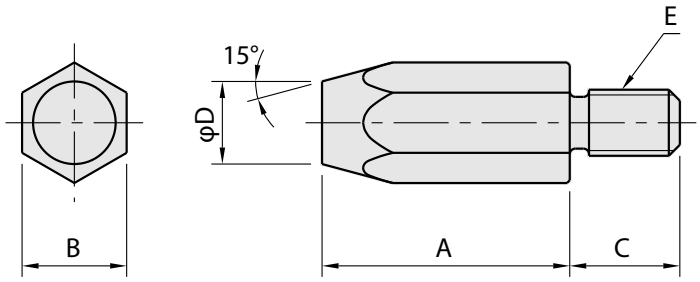

Material&finish

Steel (S45C)
Quenched and tempered
Black oxide finish
Heat treated to Rc33-39

Part Number	A	B	C	D	E	weight (g)
51 99 19 42	10	10	11	8	M 6×1	6
51 99 19 43	20			6		13
51 99 19 44	15	13	13	10	M 8×1.25	18
51 99 19 45	30			9		33
51 99 19 46	20	17	16	13	M10×1.5	44
51 99 19 47	40					80
51 99 19 48	25	19	20	15	M12×1.75	70
51 99 19 49	50					120

BJ735 TOGGLE PADS

(Plain)

(Serrated)

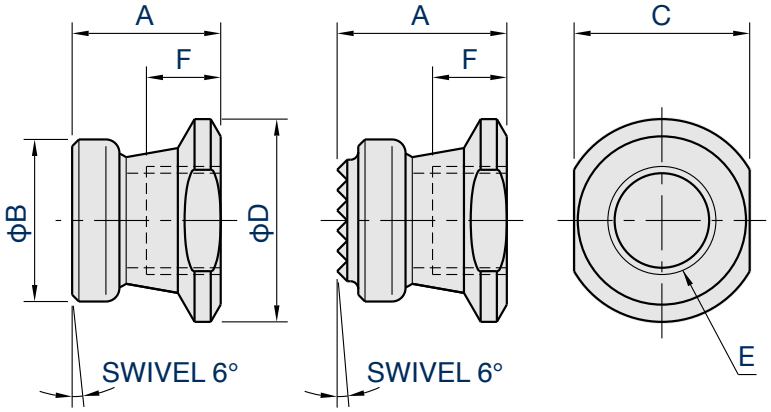

(Plain) (Serrated)

Type	Body	Pad	Insert Tip
Plain	Steel (SCM440) Black oxide finish	Steel (SCM440) Quenched and tempered Black oxide finish Heat treated to Rc36-40	-
Serrated			Carbide Black oxide finish

code	A	B	C	D	E	F	Load Capacity (N)	Weight (g)
51 99 19 50	15.5	14	12	14.3	M 6×1	5.5	5,000	9
51 99 19 51	13							
51 99 19 52	19.5	16	14	16	M 8×1.25	7	10,000	13
51 99 19 53	17							
51 99 19 54	21.5	18	16	19.1	M10×1.5	8	13,000	21
51 99 19 55	18							
51 99 19 56	25.5	21	22	25.4	M12×1.75	9.5	24,000	34
51 99 19 57	22							
51 99 19 58	28	24	22	25.4	M16×2	11	38,000	50
51 99 19 59	25							
51 99 19 60	33	28	30	31.5	M20×2.5	13.5	57,000	82
51 99 19 61	29							

SRP / DRP REST PADS

(Steel)

(Plastic)

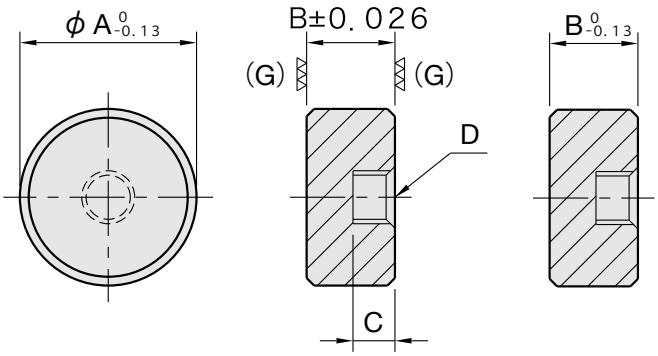

(Steel) (Plastic)

Type	Material & Finish
Steel	Steel (SNCM220) Carburized-hardened Black oxide finish Heat treated to Rc60
Plastic	Polyacetal plastic White

Steel		Plastic		A	B	C	D
Part Number	Weight (g)	Part Number	Weight (g)				
51 99 19 62	5	51 99 19 68	1	10	10	5	M5×0.8
51 99 19 63	8	51 99 19 69	2	12	10	5	M5×0.8
51 99 19 64	10	51 99 19 70	2	12	12	6.4	M5×0.8
51 99 19 65	15	51 99 19 71	3	16	10	5	M6×1
51 99 19 66	23	51 99 19 72	4	20	10	5	M6×1
51 99 19 67	37	51 99 19 73	7	25	10	5	M6×1

Application Examples

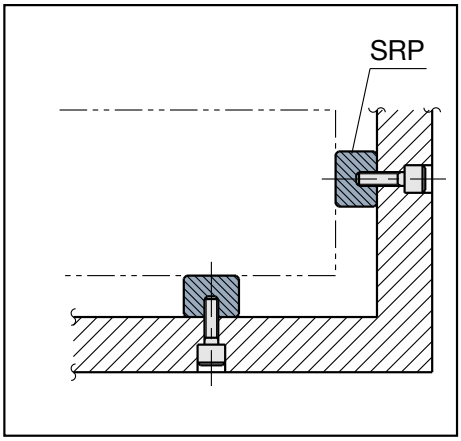

• Workpiece positioning

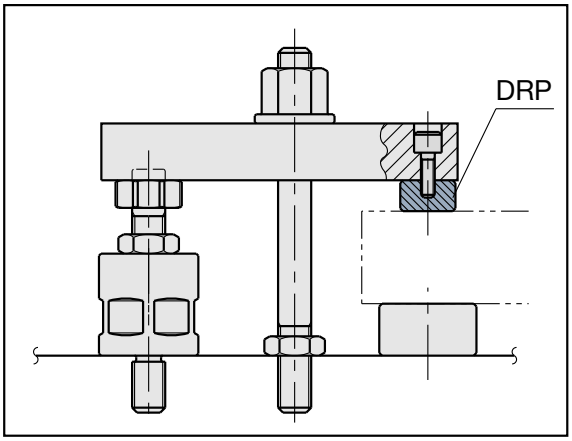

• Protecting a soft or precision ground workpiece.

HS ROUND GRIPPERS, Tapped

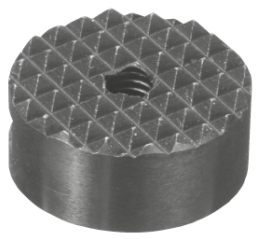

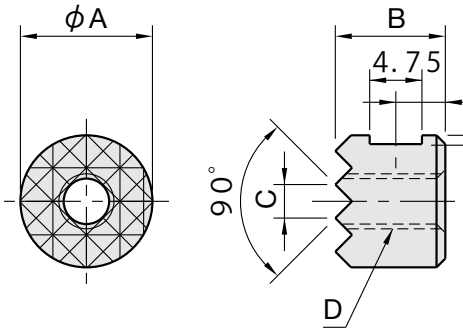

Steel (SKH51)
Quenched and tempered
Black oxide finish
Heat treated to Rc62

Part Number	A $(^{0}_{-0.13})$	B $(^{0}_{-0.13})$	C	D	E	Weight (g)
51 99 19 74	10	10	2.3	M5×0.8	4.5	5
51 99 19 75		12			6	6
51 99 19 76	12	10	3	M5×0.8	4.5	8
51 99 19 77		12			6	9
51 99 19 78	16	10	3	M6×1	4.5	14
51 99 19 79		12			6	15
51 99 19 80	20	10	3	M6×1	4.5	23
51 99 19 81		12			6	25
51 99 19 82	25	10	3	M6×1	4.5	37
51 99 19 83		12			6	40

HS SQUARE GRIPPERS, Tapped

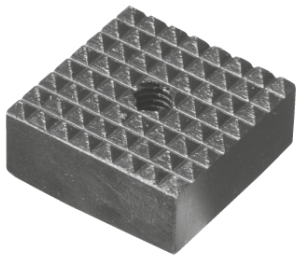

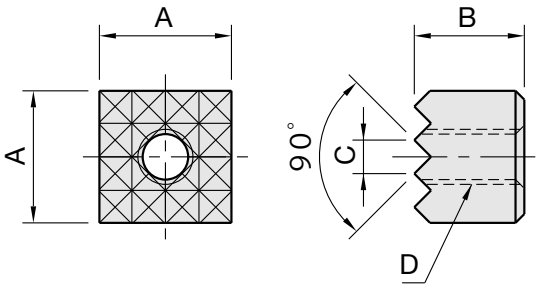

Material & Finish

Steel (SKH51)
Quenched and tempered
Black oxide finish
Heat treated to Rc62

Part Number	A $(^{0}_{-0.13})$	B $(^{0}_{-0.13})$	C	D	Weight (g)
51 99 19 84	10	10	2.3	M5×0.8	7
51 99 19 85		12			7.5
51 99 19 86	12	10	3	M5×0.8	10
51 99 19 87		12			11
51 99 19 88	16	10	3	M6×1	17
51 99 19 89	20	10	3	M5×0.8	30
51 99 19 90		12			33.5
51 99 19 91	25	10	3	M6×1	47
51 99 19 92		12			53

HS-C ROUND GRIPPERS, C'Bored

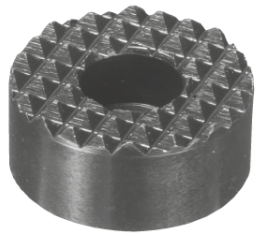

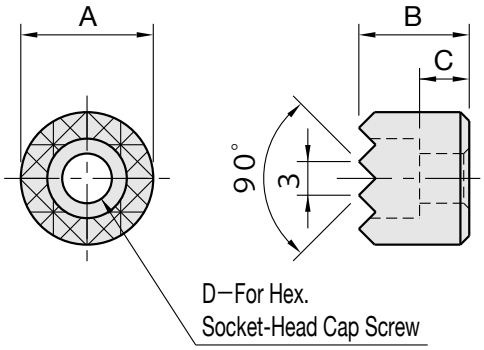

Steel (SKH51)
Quenched and tempered
Black oxide finish
Heat treated to Rc62

Part Number	A $(^{0}_{-0.13})$	B $(^{0}_{-0.13})$	C	D	Weight (g)
51 99 19 93	12	10	4.5	M4	6
51 99 19 94		12	6.5		8
51 99 19 95	16	10	4.5	M4	12
51 99 19 96		12	6.5		15
51 99 19 97	20	10	3.5	M5	19
51 99 19 98		12	5.5		23
51 99 19 99	25	10	2.5	M6	30
51 99 20 00		12	4.5		38

HS-C SQUARE GRIPPERS, C'Bored

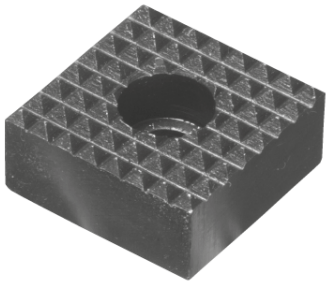

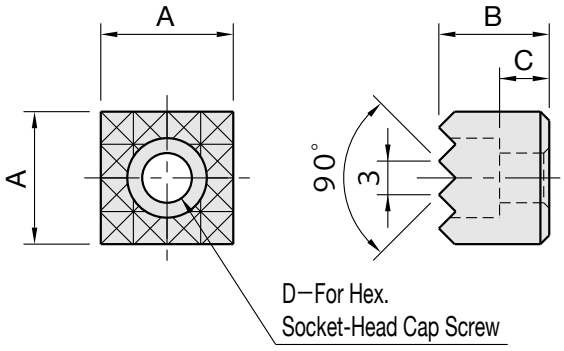

Steel (SKH51)
Quenched and tempered
Black oxide finish
Heat treated to Rc62

Part Number	A $(^{0}_{-0.13})$	B $(^{0}_{-0.13})$	C	D	Weight (g)
51 99 20 01	12	10	4.5	M4	8
51 99 20 02		12	6.5		10
51 99 20 03	16	10	4.5	M4	16
51 99 20 04	20	10	3.5	M5	25
51 99 20 05		12	5.5		31
51 99 20 06	25	10	2.5	M6	40
51 99 20 07		12	4.5		49

CT ROUND GRIPPERS

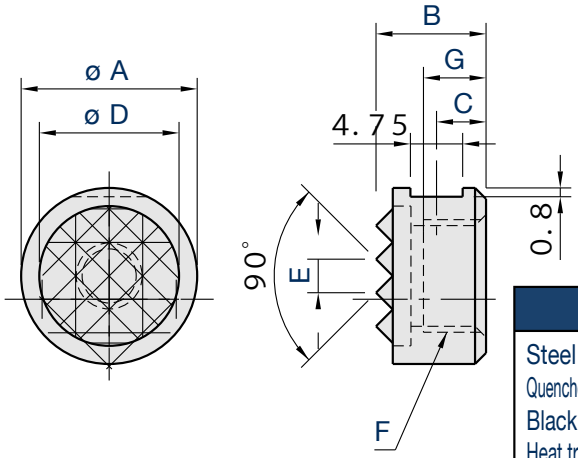

Body	Tip
Steel (SCM440) Quenched and tempered Black oxide finish Heat treated to Rc32	Carbide Black oxide finish

code	A ($^{0}_{-0.13}$)	B ($^{0}_{-0.13}$)	C	D	E	F	G (Effective Thread Length)	Weight (g)
51 99 20 08	10	10	4.5	7.9	2.3	M5×0.8	6.5	5
51 99 20 09		12	6				8.5	6
51 99 20 10	12	10	4.5	9.5	3	M5×0.8	6.5	8
51 99 20 11		12	6				8.5	9
51 99 20 12	16	10	4.5	12.7	3	M6×1	6.5	14
51 99 20 13		12	6				8.5	17
51 99 20 14	20	10	4.5	15.9	3	M6×1	6.5	23
51 99 20 15		12	6				8.5	28
51 99 20 16	25	10	4.5	19.1	3	M6×1	6.5	35
51 99 20 17		12	6				8.5	43

CT SQUARE GRIPPERS

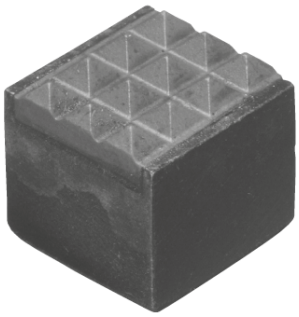

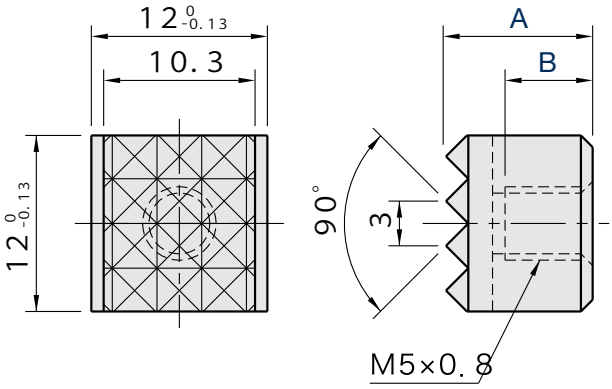

code	A ($^{0}_{-0.13}$)	B (Effective Thread Length)	Weight (g)
51 99 20 18	10	6.5	10
51 99 20 19	12	8.5	13

Body	Tip
Steel (SCM440) Quenched and tempered Black oxide finish Heat treated to Rc32	Carbide Black oxide finish

HSE EDGE GRIPPERS, Diamond Serration

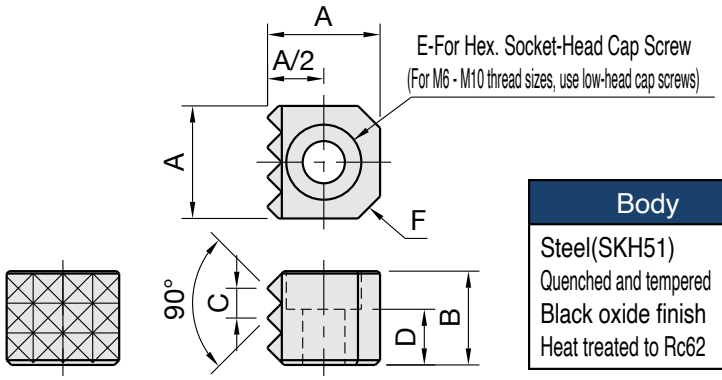

Body

Steel(SKH51)
Quenched and tempered
Black oxide finish
Heat treated to Rc62

code	A (0 / -0.13)	B (0 / -0.13)	C	D	E	F	Weight (g)
51 99 20 20	10	6	2.3	2.8	M 3	1.6	4
51 99 20 21		10		6.8			6
51 99 20 22	12	6	3	1.9	M 4	2.3	4
51 99 20 23		10		5.9			8
51 99 20 24		12		7.9			10
51 99 20 25	16	6	3	1.8	M 6	3.2	8
51 99 20 26		10		5.8			14
51 99 20 27		12		7.8			17
51 99 20 28	20	6	3	0.9	M 8	3.2	10
51 99 20 29		10		4.9			20
51 99 20 30		12		6.9			25
51 99 20 31	25	10	3	3.4	M10	3.2	31
51 99 20 32		12		5.4			39

HSE-SS EDGE GRIPPERS, Straight Serration

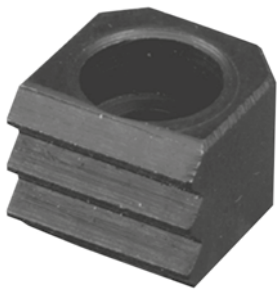

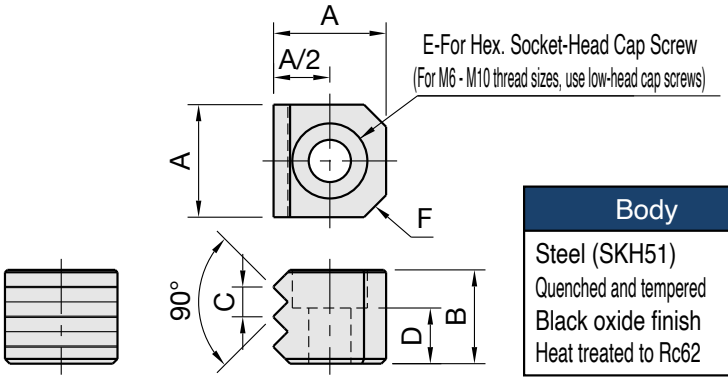

Body

Steel (SKH51)
Quenched and tempered
Black oxide finish
Heat treated to Rc62

code	A (0 / -0.13)	B (0 / -0.13)	C	D	E	F	Weight (g)
51 99 20 33	10	6	2.3	2.8	M 3	1.6	4
51 99 20 34		10		6.8			6
51 99 20 35	12	6	3	1.9	M 4	2.3	5
51 99 20 36		10		5.9			8
51 99 20 37		12		7.9			10
51 99 20 38	16	6	3	1.8	M 6	3.2	8
51 99 20 39		10		5.8			14
51 99 20 40		12		7.8			18
51 99 20 41	20	6	3	0.9	M 8	3.2	10
51 99 20 42		10		4.9			20
51 99 20 43		12		6.9			25
51 99 20 44	25	10	3	3.4	M10	3.2	31
51 99 20 45		12		5.4			40

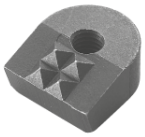
51 99 20 46

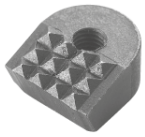
51 99 20 47

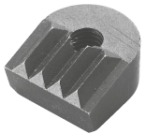
51 99 20 48

51 99 20 49

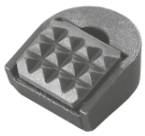
51 99 20 50

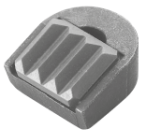
51 99 20 51

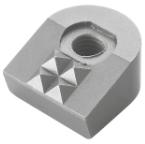
51 99 20 52

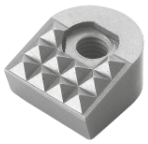
51 99 20 53

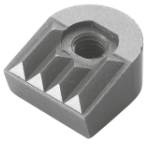
51 99 20 54

51 99 20 46 51 99 20 47 51 99 20 48	Steel (SKH51) Quenched and tempered Black oxide finish Heat treated to Rc62	
51 99 20 49 51 99 20 50 51 99 20 51	Steel (SKH51) Quenched and tempered Black oxide finish Heat treated to Rc62	Carbide Black oxide finish
51 99 20 52 51 99 20 53 51 99 20 54	Carbide Black oxide finish	

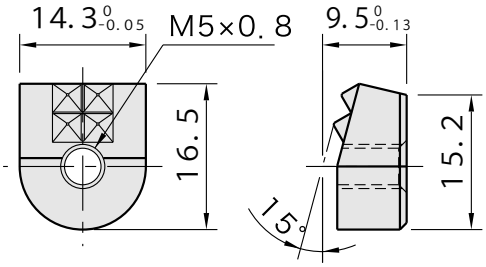

51 99 20 46

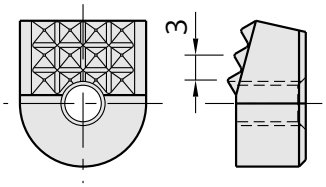

51 99 20 47

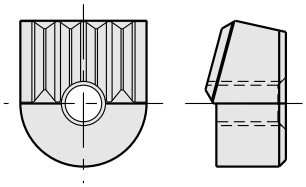
51 99 20 48

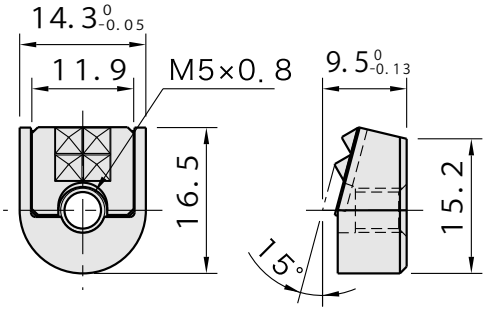

51 99 20 49

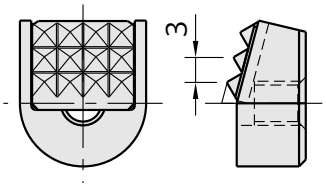

51 99 20 50

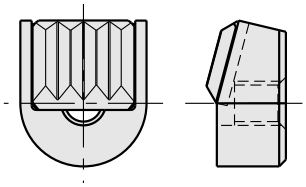
51 99 20 51

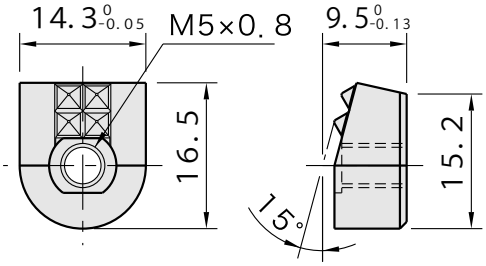

51 99 20 52

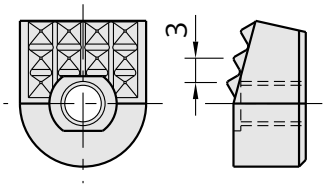

51 99 20 53

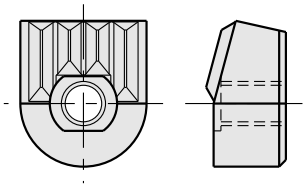
51 99 20 54

Part Number	Weight (g)
51 99 20 46	11
51 99 20 47	12
51 99 20 48	

Part Number	Weight (g)
51 99 20 49	12
51 99 20 50	13
51 99 20 51	

Part Number	Weight (g)
51 99 20 52	20
51 99 20 53	
51 99 20 54	

HS SOCKET SCREW GRIPPERS

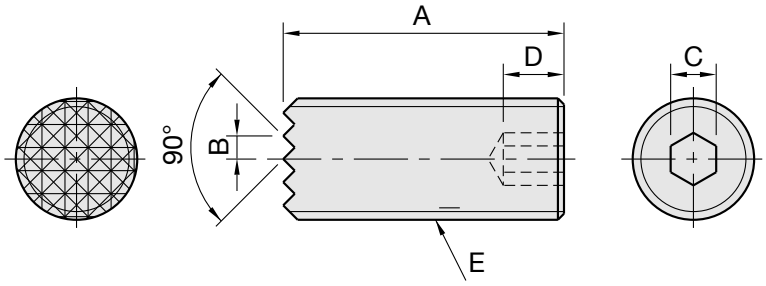

code	A	B	C	D	E	Weight (g)
51 99 20 55	25	2.3	3	4	M10×1.5	13
51 99 20 56	40					21
51 99 20 57	25	3	5	6	M12×1.75	16
51 99 20 58	40					29
51 99 20 59	25	3	6	8	M16×2	34
51 99 20 60	40					53
51 99 20 61	25	3	8	10	M20×2.5	54
51 99 20 62	40					82

Material & Finish
Steel (SKH51) Quenched and tempered Black oxide finish Heat treated to Rc58

PG TIPPED SOCKET SCREW GRIPPERS

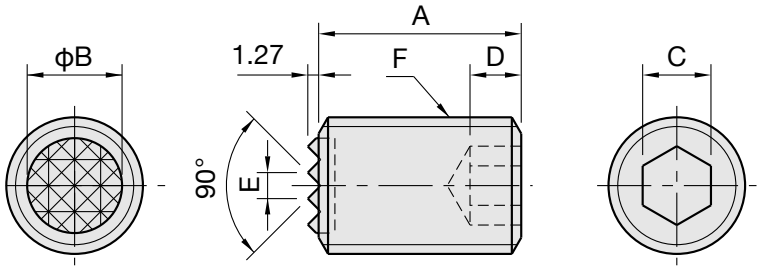

Body	Tip
Steel (SCM440) Quenched and tempered Black oxide finish	Carbide Black oxide finish

code	A	B	C	D	E	F	Weight (g)
51 99 20 63	25	6.4	5	4	2.3	M10×1.5	15
51 99 20 64	50						30
51 99 20 65	25	7.9	6	5	2.3	M12×1.75	21
51 99 20 66	50						43
51 99 20 67	25	11.1	8	6	3	M16×2	37
51 99 20 68	50						77
51 99 20 69	25	12.7	10	8	3	M20×2.5	57
51 99 20 70	50						119

PG TIPPED SOCKET SCREW GRIPPERS

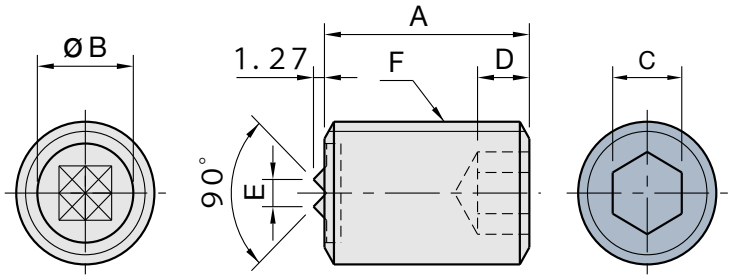

code	A	B	C	D	E	F	Weight (g)
51 99 20 71	25	7.9	6	5	3	M12×1.75	21
51 99 20 72	50						43
51 99 20 73	25	11.1	8	6	3	M16×2	37
51 99 20 74	50						77
51 99 20 75	25	12.7	10	8	3	M20×2.5	57
51 99 20 76	50						119

Steel (SCM440) Quenched and tempered Black oxide finish	Carbide Black oxide finish

CT HEX-HEAD SCREW GRIPPERS

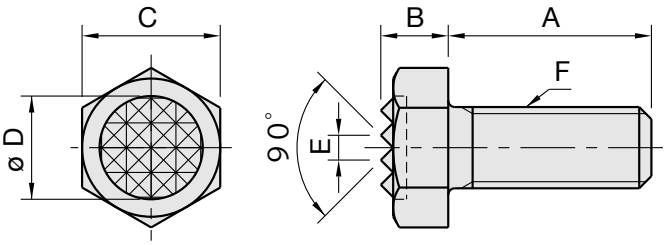

code	A	B	C	D	E	F	Weight (g)
51 99 20 77	12	5	10	7.9	2.3	M 6×1	6
51 99 20 78	25						8
51 99 20 79	12	6.4	13	9.5	3	M 8×1.25	10
51 99 20 80	25						15
51 99 20 81	35						17
51 99 20 82	25	8.3	17	12.7	3	M10×1.25	20
51 99 20 83	12	8.3	17	12.7	3	M10×1.5	25
51 99 20 84	25						27
51 99 20 85	40						36
51 99 20 86	25	8.7	19	15.9	3	M12×1.75	42
51 99 20 87	40						55
51 99 20 88	35	11	24	19.1	3	M16×2	88
51 99 20 89	50						127
51 99 20 90	40	13.5	30	25.4	2.3	M20×2.5	133
51 99 20 91	60						231

Steel (SCM440) Quenched and tempered Black oxide finish Heat treated to Rc32	Carbide Black oxide finish

BUH HEX-HEAD SWIVEL GRIPPER SCREW

51 99 20 92 - 20 97
(Serrated, Steel Ball)

51 99 20 98 - 21 11
(Serrated, Steel Tip)

51 99 21 12 - 21 17
(Plain, Steel Ball)

51 99 21 18 - 21 31
(Plain, Steel Tip)

51 99 21 32 - 21 37
(Plain, Plastic Ball)

51 99 21 38 - 21 51
(Plain, Plastic Tip)

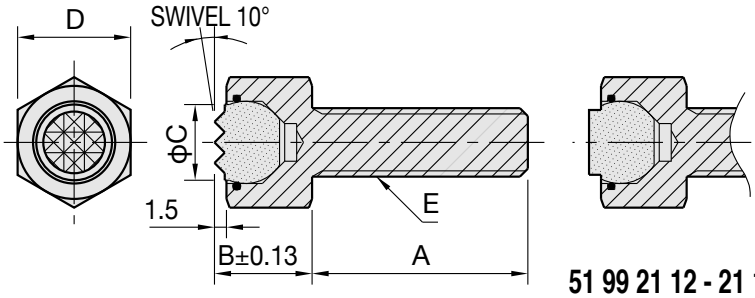

51 99 20 92 - 20 97
(Serrated, Steel Ball)

51 99 21 12 - 21 17
(Plain, Steel Ball)
51 99 21 32 - 21 37
(Plain, Plastic Ball)

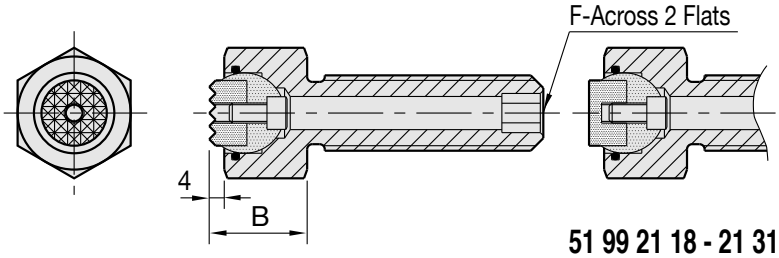

51 99 20 98 - 21 11
(Serrated, Steel Tip)

51 99 21 18 - 21 31
(Plain, Steel Tip)
51 99 21 38 - 21 51
(Plain, Plastic Tip)

code	Body	Ball	Tip
51 99 20 92 - 20 97 51 99 21 12 - 21 17	Steel(SCM440) Quenched and tempered Black oxide finish	Steel(SKH51) Quenched and tempered Black oxide finish Heat treated to Rc60	
51 99 21 32 - 21 37		Polyacetal plastic White	
51 99 20 98 - 21 11		Stainless steel (SUS440)	Steel(SKH51) Quenched and tempered Black oxide finish Heat treated to Rc62
51 99 21 18 - 21 31			Steel (SNCM220) Carburized-hardened Black oxide finish Heat treated to Rc60
51 99 21 38 - 21 51			Polyacetal plastic White

Serrated (Steel)		Plain (Steel)		Plain (Plastic)		A	B	C	D	E	F	Load Capacity (N)
code	Weight (g)	code	Weight (g)	code	Weight (g)							
51 99 20 92	7	**51 99 21 12**	7	**51 99 21 32**	6	12	9.5	6	10	M 6x1	-	5,300
51 99 20 93	8	**51 99 21 13**	8	**51 99 21 33**	7	25						
51 99 20 94	10	**51 99 21 14**	10	**51 99 21 34**	9	40						
51 99 20 95	12	**51 99 21 15**	12	**51 99 21 35**	11	12	13	8.5	13	M 8x1.25	-	10,900
51 99 20 96	18	**51 99 21 16**	18	**51 99 21 36**	16	25						
51 99 20 97	22	**51 99 21 17**	22	**51 99 21 37**	21	40						
51 99 20 98	26	**51 99 21 18**	26	**51 99 21 38**	22	15	17	10	17	M10x1.5	3	18,400
51 99 20 99	33	**51 99 21 19**	33	**51 99 21 39**	29	30						
51 99 21 00	43	**51 99 21 20**	43	**51 99 21 40**	39	50						
51 99 21 01	55	**51 99 21 21**	55	**51 99 21 41**	49	20	19	12	19	M12x1.75	5	24,500
51 99 21 02	65	**51 99 21 22**	65	**51 99 21 42**	59	40						
51 99 21 03	75	**51 99 21 23**	75	**51 99 21 43**	69	60						
51 99 21 04	87	**51 99 21 24**	87	**51 99 21 44**	75	25	23	16	24	M16x2	6	43,600
51 99 21 05	117	**51 99 21 25**	117	**51 99 21 45**	105	50						
51 99 21 06	152	**51 99 21 26**	152	**51 99 21 46**	140	80						
51 99 21 07	153	**51 99 21 27**	154	**51 99 21 47**	134	30	24	20	30	M20x2.5	8	57,700
51 99 21 08	205	**51 99 21 28**	206	**51 99 21 48**	186	60						
51 99 21 09	276	**51 99 21 29**	277	**51 99 21 49**	257	100						
51 99 21 10	287	**51 99 21 30**	289	**51 99 21 50**	257	40	30	25	36	M24x3	10	85,600
51 99 21 11	432	**51 99 21 31**	434	**51 99 21 51**	402	100						

Application Example

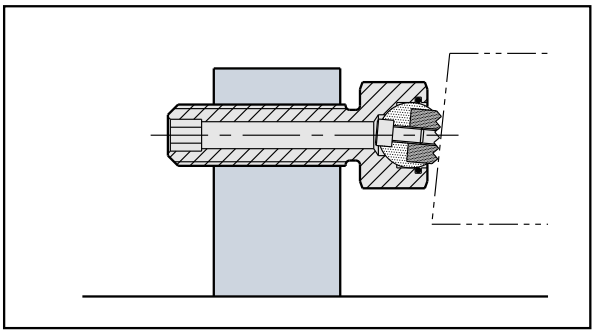

• Ideal for workpiece positioning and positive holding.

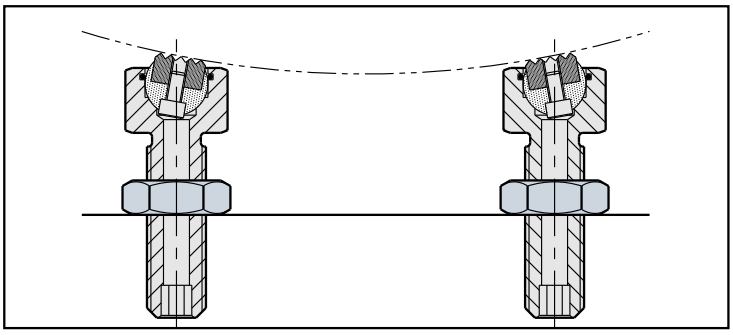

• Can also be used as screw jacks.

How To Install Tip

• Push the ball out of the body and then secure the tip to the ball using the included hex. socket-head cap screw.

TBU SWIVEL GRIPPER SCREWS

51 99 21 52 - 21 57
(Serrated, Steel Ball)

51 99 21 58 - 21 62
(Serrated, Steel Tip)

51 99 21 63 - 21 68
(Plain, Steel Ball)

51 99 21 69 - 21 73
(Plain, Steel Tip)

51 99 21 74 - 21 79
(Plain, Plastic Ball)

51 99 21 80 - 21 84
(Plain, Plastic Tip)

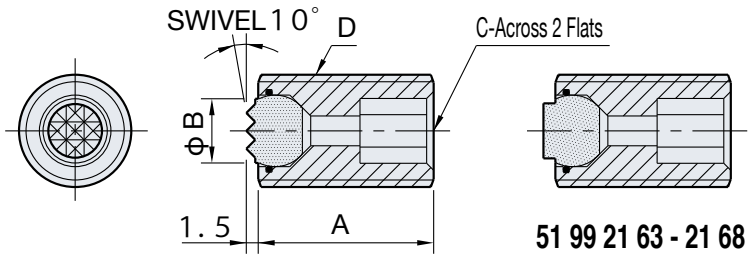

51 99 21 52 - 21 57
(Serrated, Steel Ball)

51 99 21 63 - 21 68
(Plain, Steel Ball)
51 99 21 74 - 21 79
(Plain, Plastic Ball)

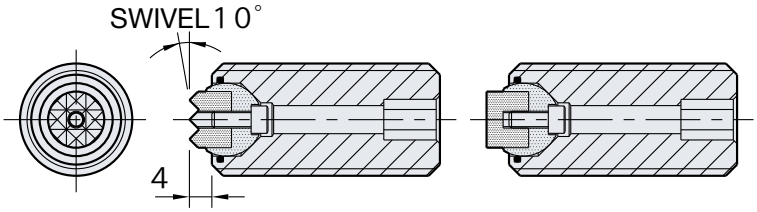

51 99 21 58 - 21 62
(Serrated, Steel Tip)

51 99 21 69 - 21 73
(Plain, Steel Tip)
51 99 21 80 - 21 84
(Plain, Plastic Tip)

code	Body	Ball	Tip
51 99 21 52 - 21 57 51 99 21 63 - 21 68	Steel (SCM440) Quenched and tempered Black oxide finish Heat treated to Rc45	Steel (SKH51) Quenched and tempered Black oxide finish Heat treated to Rc60	
51 99 21 74 - 21 79		Polyacetal plastic White	
51 99 21 58 - 21 62		Stainless steel (SUS440)	Steel (SKH51) Quenched and tempered Black oxide finish Heat treated to Rc62
51 99 21 69 - 21 73			Steel (SNCM220) Carburized-hardened Black oxide finish Heat treated to Rc60
51 99 21 80 - 21 84			Polyacetal plastic White

Serrated (Steel)		Plain (Steel)		Plain (Plastic)		A	B	C	D	Load Capacity (N)
code	Weight (g)	code	Weight (g)	code	Weight (g)					
51 99 21 52	13	51 99 21 63	13	51 99 21 74	12	25	6	6	M12×1.75	5,300
51 99 21 53	19	51 99 21 64	19	51 99 21 75	18	35				
51 99 21 54	28	51 99 21 65	28	51 99 21 76	27	50				
51 99 21 55	26	51 99 21 66	26	51 99 21 77	25	25	8.5	8	M16×2	10,900
51 99 21 56	39	51 99 21 67	39	51 99 21 78	38	35				
51 99 21 57	58	51 99 21 68	58	51 99 21 79	57	50				
51 99 21 58	57	51 99 21 69	57	51 99 21 80	53	30	10	10	M20×2.5	18,400
51 99 21 59	90	51 99 21 70	90	51 99 21 81	86	50				
51 99 21 60	123	51 99 21 71	123	51 99 21 82	119	70		8		
51 99 21 61	113	51 99 21 72	113	51 99 21 83	107	40	12	10	M24×3	24,500
51 99 21 62	210	51 99 21 73	210	51 99 21 84	204	80				

Application Example TBU

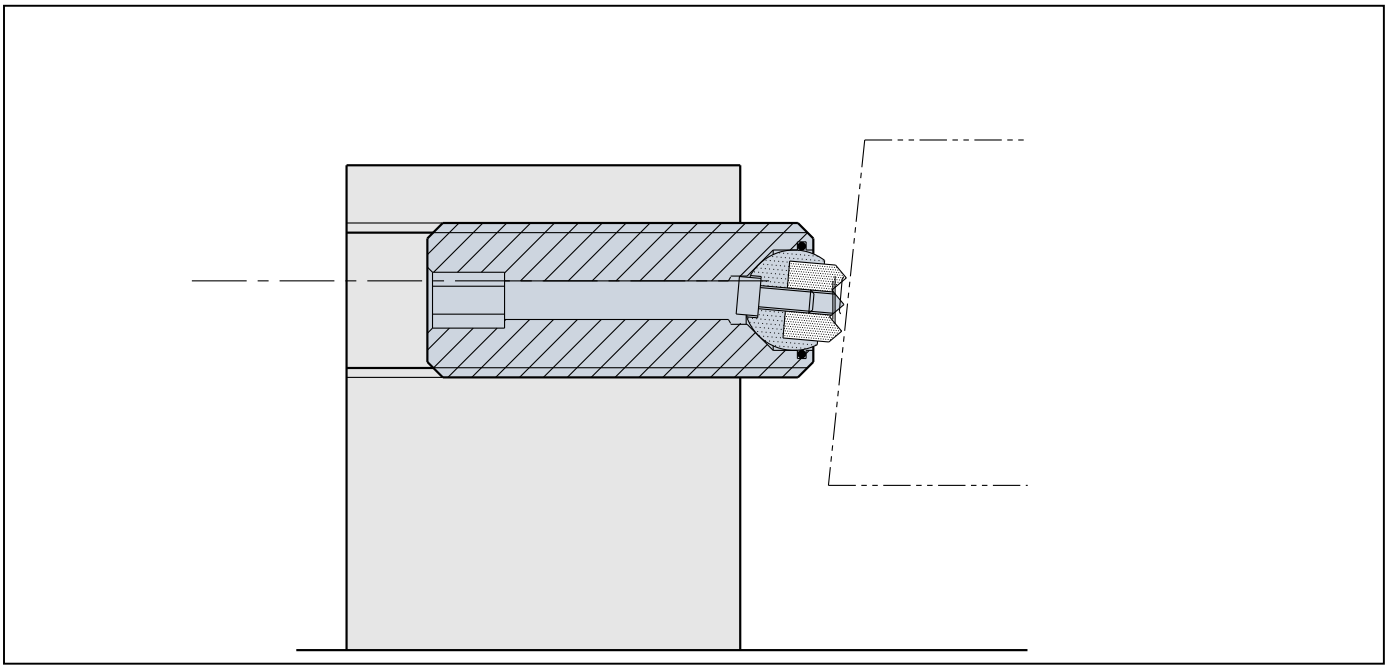

• Ideal for workpiece positioning and positive holding.

How To Install Tip

• Push the ball out of the body and then secure the tip to the ball using the included hex. socket-head cap screw.

Application Example BBU

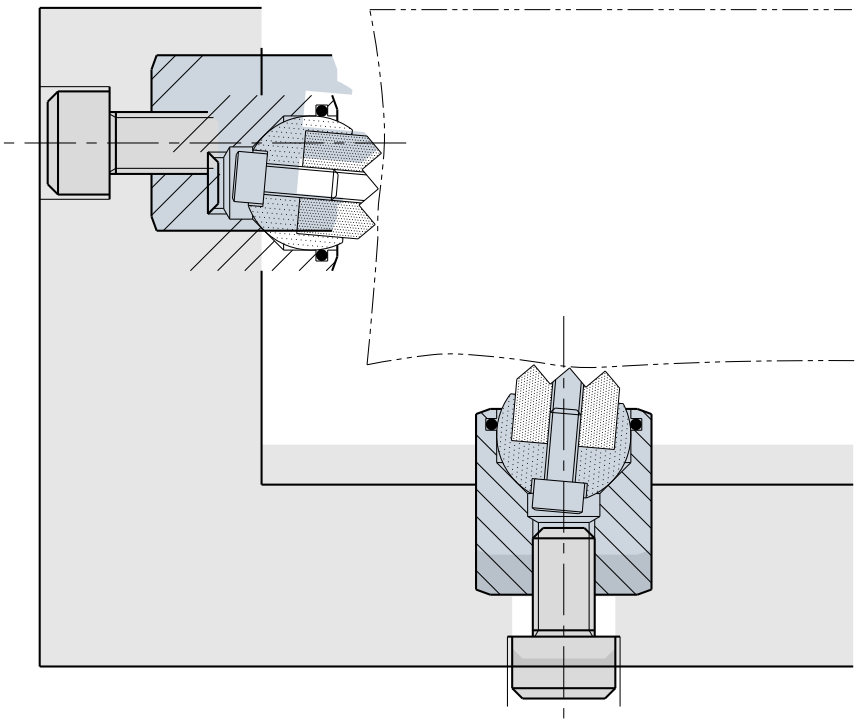

• Grippers for better workpiece positioning methods.

How To Install Tip

• Push the ball out of the body and then secure the tip to the ball using the included hex. socket-head cap screw.

BBU SWIVEL PAD GRIPPERS

51 99 21 85 - 21 88
(Serrated, Steel Ball)

51 99 21 89 - 21 93
(Serrated, Steel Tip)

51 99 21 94 - 21 97
(Plain, Steel Ball)

51 99 21 98 - 22 02
(Plain, Steel Tip)

51 99 22 03 - 22 06
(Plain, Plastic Ball)

51 99 22 07 - 22 11
(Plain, Plastic Tip)

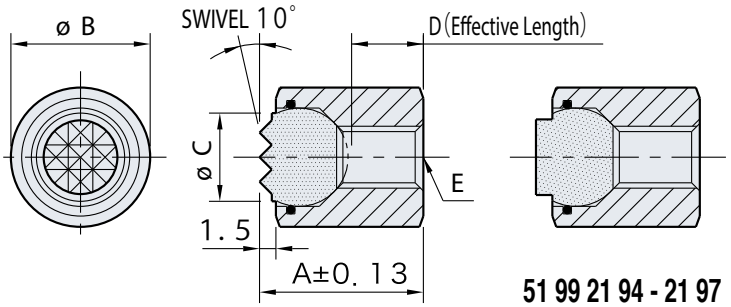

51 99 21 85 - 21 88
(Serrated, Steel Ball)

51 99 21 94 - 21 97
(Plain, Steel Ball)

51 99 22 03 - 22 06
(Plain, Plastic Ball)

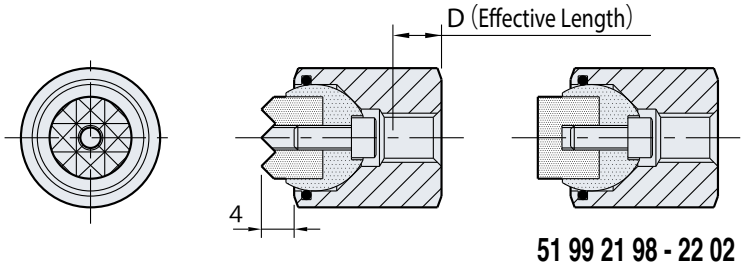

51 99 21 89 - 21 93
(Serrated, Steel Tip)

51 99 21 98 - 22 02
(Plain, Steel Tip)

51 99 22 07 - 22 11
(Plain, Plastic Tip)

code			
51 99 21 85 - 21 88 51 99 21 94 - 21 97	Steel (SCM440) Quenched and tempered Black oxide finish	Steel (SKH51) Quenched and tempered Black oxide finish Heat treated to Rc60	
51 99 22 03 - 22 06		Polyacetal plastic White	
51 99 21 89 - 21 93		Stainless steel (SUS440)	Steel (SKH51) Quenched and tempered Black oxide finish Heat treated to Rc62
51 99 21 98 - 22 02			Steel (SNCM220) Carburized-hardened Black oxide finish Heat treated to Rc60
51 99 22 07 - 22 11			Polyacetal plastic White

Serrated (Steel)		Plain (Steel)		Plain (Plastic)		A	B	C	D	E	Load Capacity (N)
Part Number	Weight (g)	Part Number	Weight (g)	Part Number	Weight (g)						
51 99 21 85	6	51 99 21 94	6	51 99 22 03	5	12	10	6	3.5	M 4×0.7	5300
51 99 21 86	13	51 99 21 95	13	51 99 22 04	12	25			9		
51 99 21 87	12	51 99 21 96	12	51 99 22 05	11	16	13	8.5	6.5	M 5×0.8	10900
51 99 21 88	21	51 99 21 97	21	51 99 22 06	20	25			9		
51 99 21 89	31	51 99 21 98	31	51 99 22 07	27	22	17	10	7.5	M 6×1	18400
51 99 21 90	43	51 99 21 99	43	51 99 22 08	37	24	19	12	8.5	M 8×1.25	24500
51 99 21 91	72	51 99 22 00	73	51 99 22 09	61	28	24	16	9	M10×1.5	43600
51 99 21 92	128	51 99 22 01	129	51 99 22 10	109	30	30	20	8.5	M12×1.75	57700
51 99 21 93	235	51 99 22 02	237	51 99 22 11	205	36	36	25	12	M12×1.75	85600

NOTES

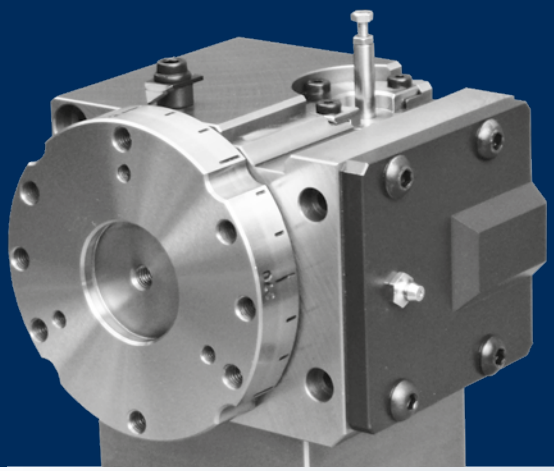

TOUCHDEX

Automatic mechanical indexing tables

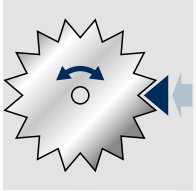

Description and operating instructions

Page 15.3

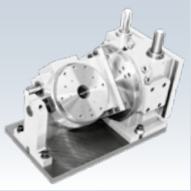

TILTING

Page 15.15

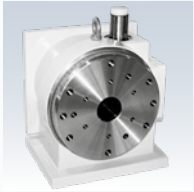

TOUCHDEX indexing tables

Page 15.8

Accessories

Page 15.16

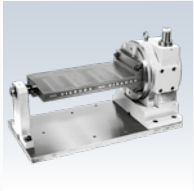

COMBIDEX

Page 15.14

TOUCHDEX
Automatic mechanical indexing tables

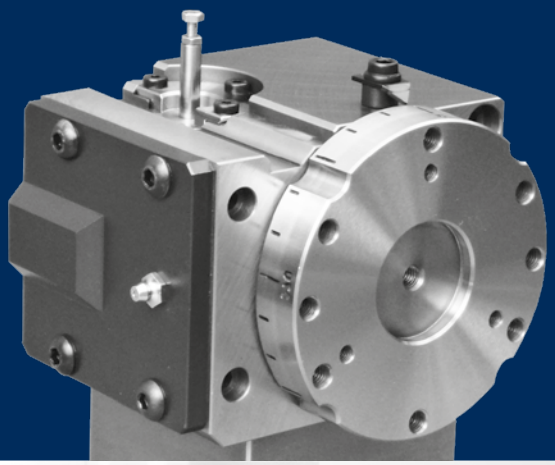

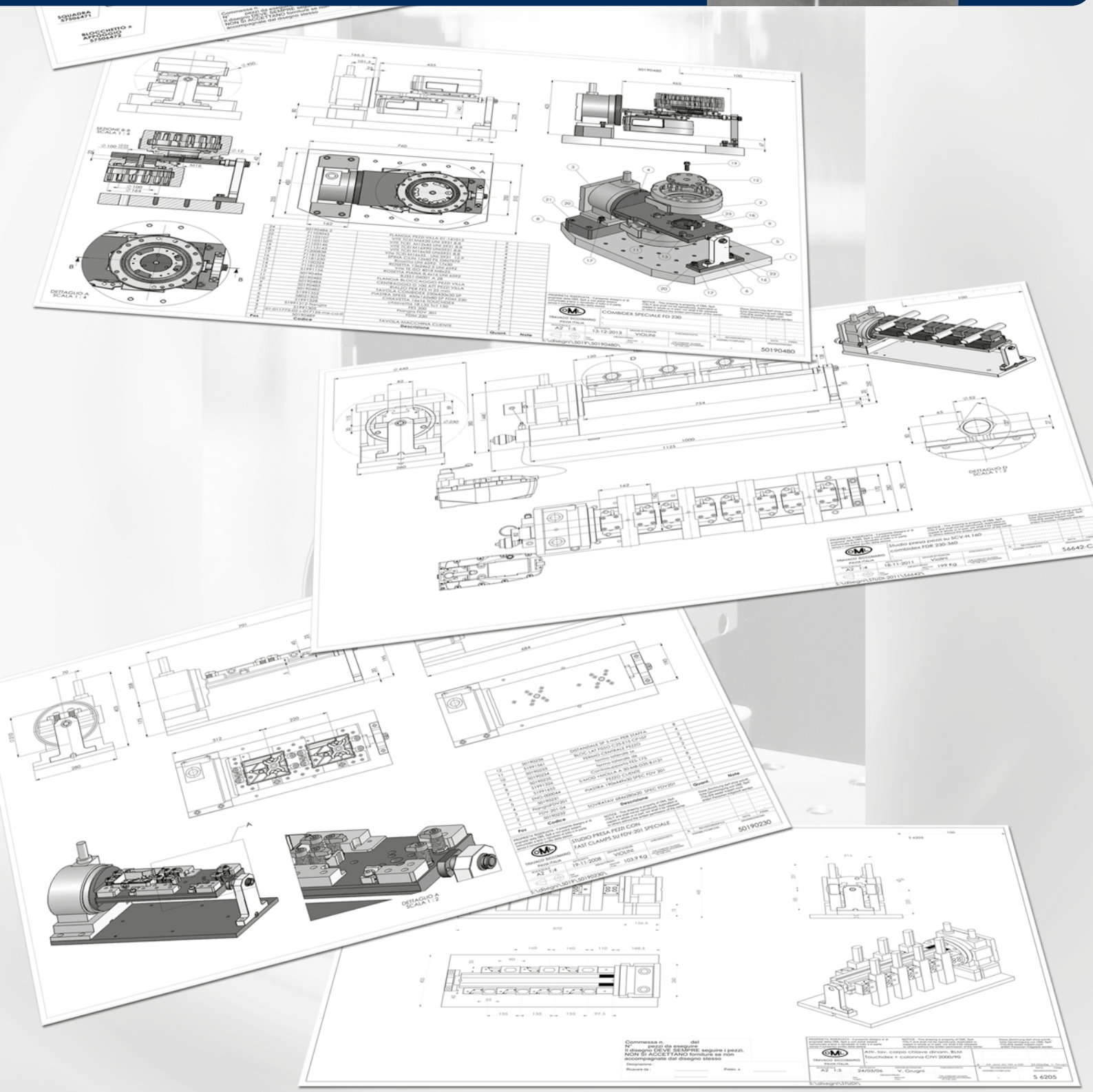

HIGH RIGIDITY AND PRECISION OF THE SYSTEM

TOUCHDEX	CNC System
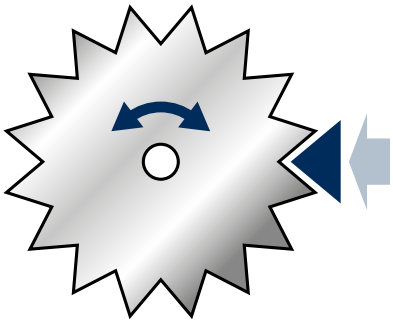	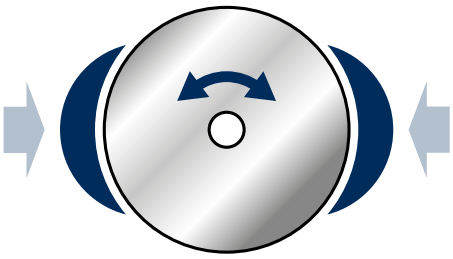
Exclusive Mechanical clamping System "LOCKING PIN"	**Traditional braking jaws system**

The exclusive TOUCHDEX system provides a clamping force 2 to 3 times that an ordinary index table thus allowing heavy machining.

Example	Face Milling	Drilling	Drilling
Machining S45C Material	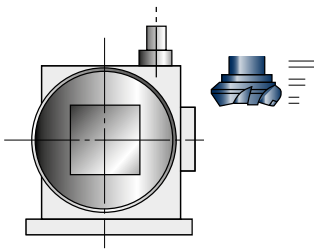	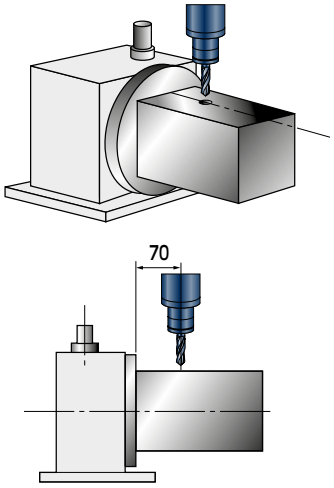	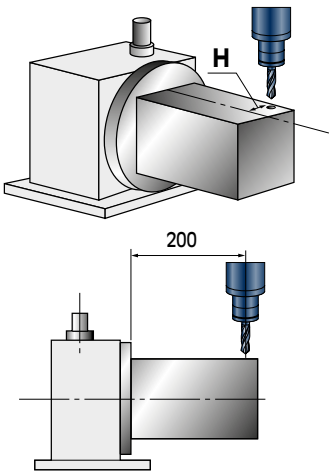
FD-200	Δ 80 Face mill 3 mm (depth of cut) 130 mm/min (Feedrate)	Δ 35 Drill 20 mm/min (Feedrate)	Δ 20 Drill 30 mm/min (Feedrate) H = 80 mm
FD-300	Δ 80 Face mill 3 mm (depth of cut) 130 mm/min (Feedrate)	Δ 40 Drill 20 mm/min (Feedrate)	Δ 25 Drill 30 mm/min (Feedrate) H = 90 mm

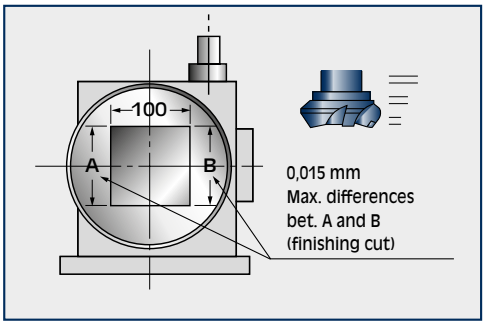

HIGH PRECISION

- **Indexing accuracy of less than 30"**
- **Repeat accuracy ± 3"**

The unique clamping system ensures high accuracy despite locking pin wear, and with 0 backlash for the life of the unit (see example)

VERSATILITY OF THE SYSTEM

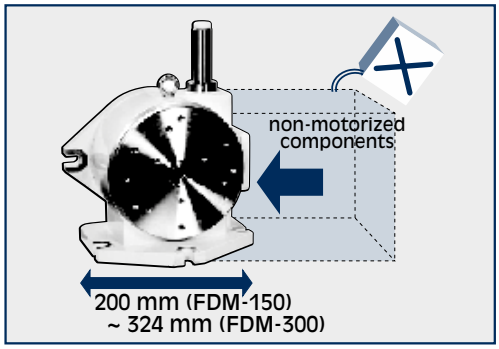

• Minimum space required

Since it has no motorized part, it can be installed in a minimum amount of space

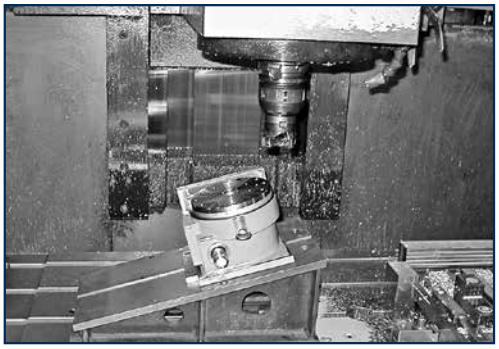

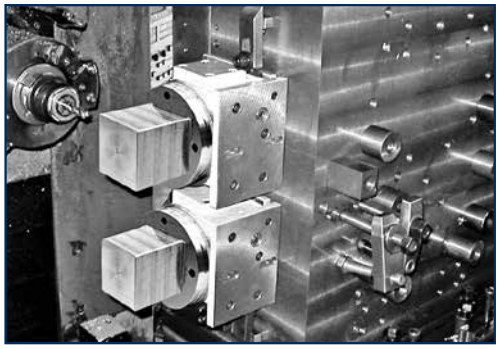

• Versatility

Since it has no electric or pneumatic connections, it can be installed on MULTI-PALLET machining centers either vertical or horizontal with the possibility to create flexible production systems

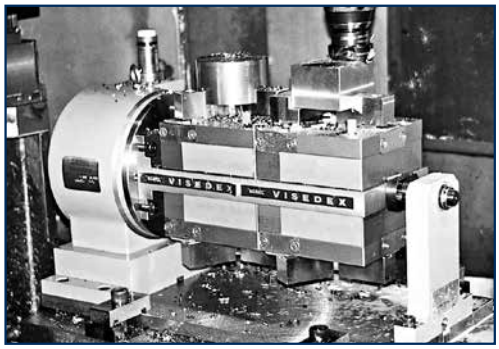

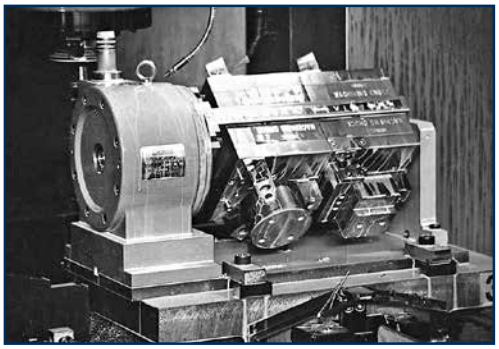

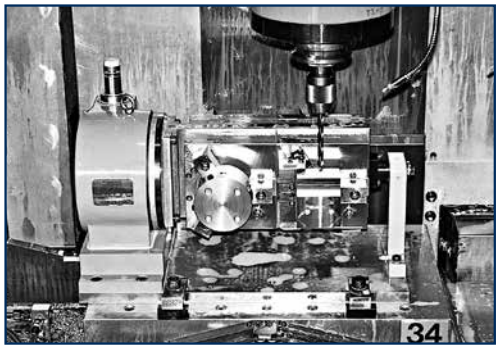

• Easily mounted

As a power control cable is not required the displacement from a machining center to another one is very easy

VARIETY OF TOUCHDEX MODELS AVAILABLE

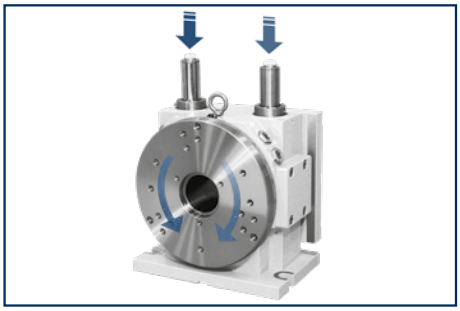

FDR
Indexing and rotation in TWO directions

- Left pushbar for counterclockwise
- Right pushbar for clockwise

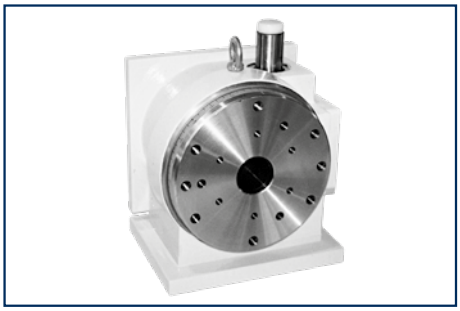

FDM
With the adaption for the installation either in horizontal or in vertical

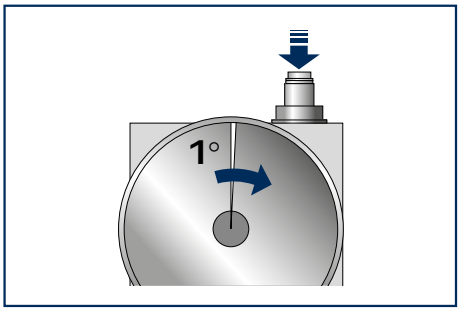

FD - ... - 360
1 deg. Indexing ideal for workpieces of complex shape

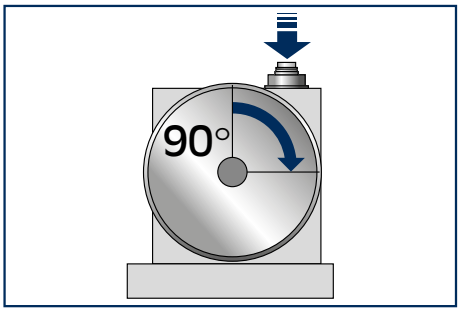

FD - ... - 04
90 deg. Indexing rotation per stroke. Pressing the pushbar down one rotate the table by 90 deg. Ideal for square workpieces

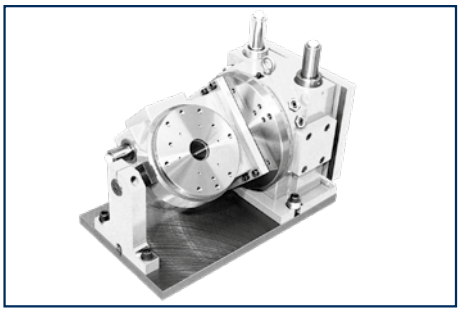

TILTING 230-150
Five-face machining. Integrates FDR-230 and FDM-150 for five-face machining on vertical machining centers

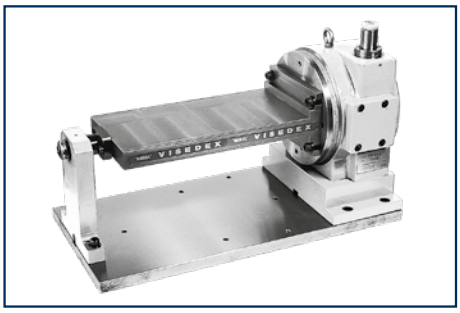

COMBIDEX
Integrates subplate and plate for workholding applications

WORKING

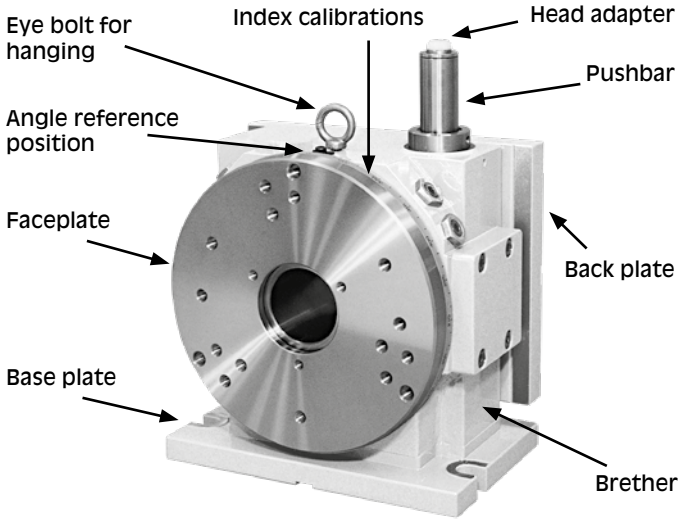

INTERNAL MECHANISM

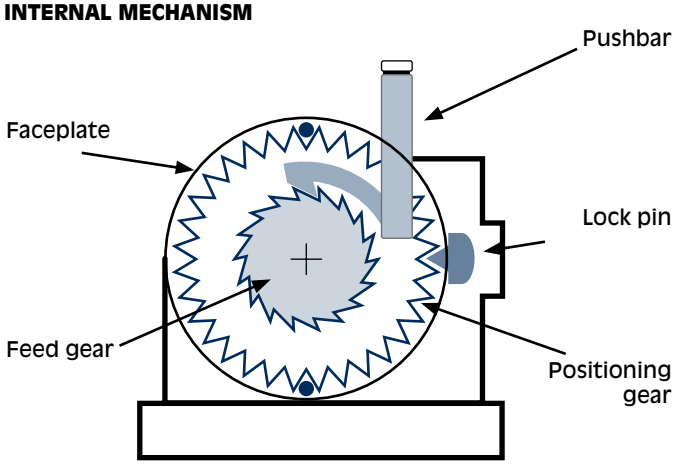

1 **Wen the pushbar is pressed down a little, the lock pin retracts due to a grooved cam mechanism.**

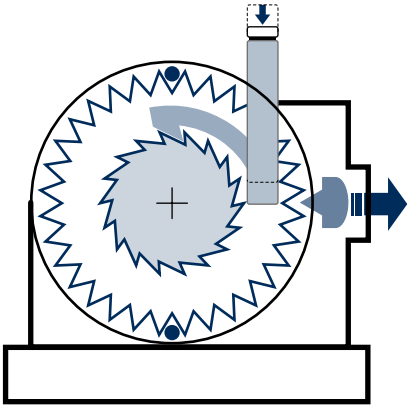

2 **When pressed down further, the faceplate begins to rotate.**

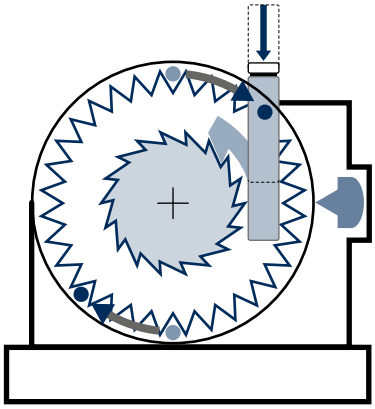

3 **The pushbar returns, but until a certain position is reached the faceplate and the lock pin continue to be as they were.**

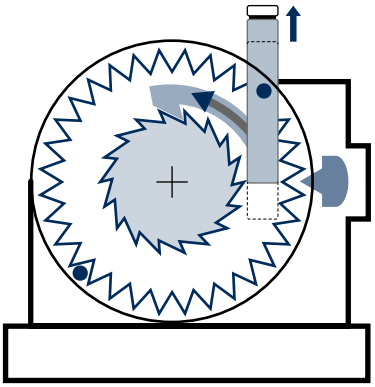

4 **When the pushbar reaches the top most position, the lock pin engages with the positioning gear and fixes the table.**

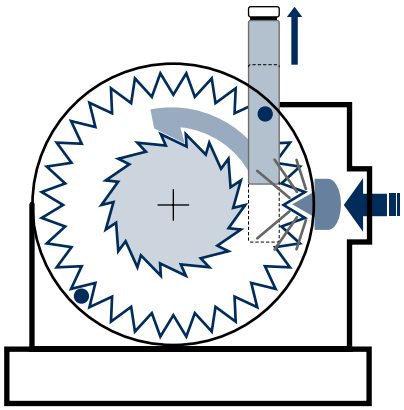

PROGRAMMING

* POSITION *A*

Using handle mode.

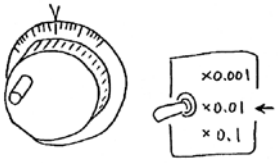

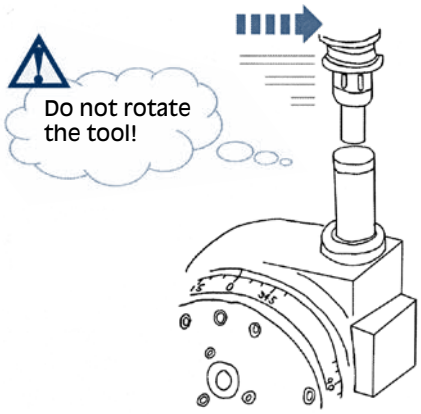

Move the tool over the pushbar, using manual mode.

Read and memory **Z** axis number.

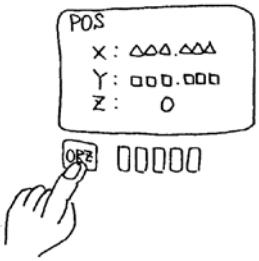

* POSITION *B*

Using handle mode.

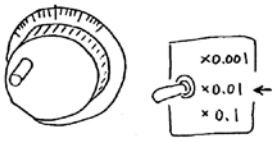

Adjust the indexing as accurately as your eyes can master.

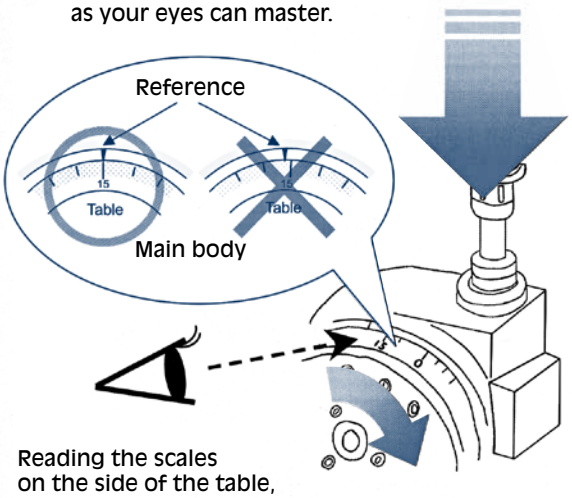

Reading the scales on the side of the table, move the **Z** axis with manual handle mode until the indexing is completed.

Read and memory **Z** axis number.

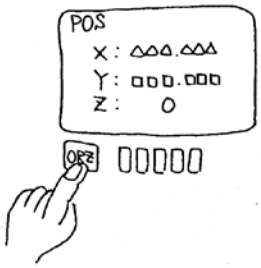

PROGRAM

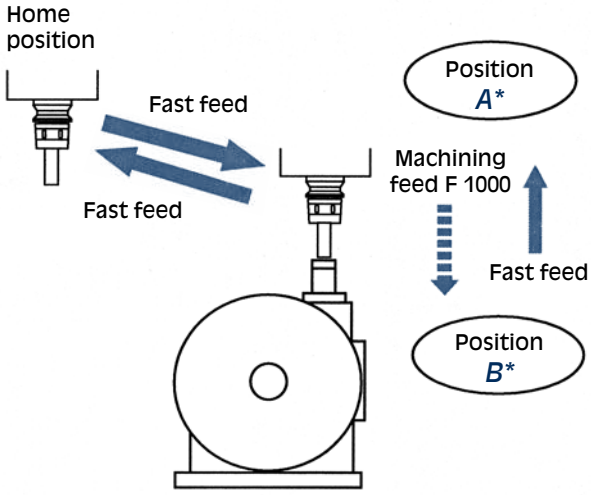

INFORMATION

Regarding the push-in tool

Providing the drill is Ø 10 mm or wider and no bending is caused during the pushing down, the tool you are using is appropriate.

If a tool with a sharp tip is used, it will badly wear down the resin and the resin will have to be replaced.

The main shaft cover can also be used to push down.

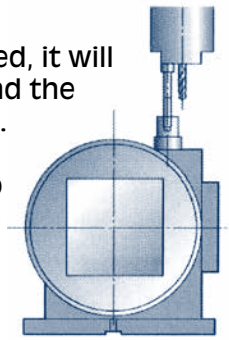

Code	Type	Indexing angles		Pushbar Stroke
		Min°	Max °	mm
51 99 13 20	**FDK-450**	**5°**	**45°**	**93**

FDK-450

New

LARGEST TOUCHDEX

Table Dia 450mm

Large Center Hole Secured

Standard equipment with a Brake Ring Function

Brake Ring Function. This function suppresses a decrease in clamping force during indexing by continuously applying a constant friction force to the table. This function can respond to more unbalanced workpieces / jigs

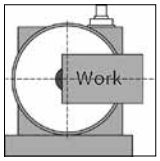

A manual indexing unit (MH-6) is supplied as standard accessory

With a lock cancelation function

Manual Unit MH-6
(stroke: 15mm)

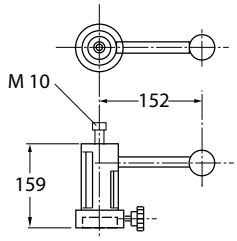

Type		FDK-450
Table Diameter	mm	450
Center Heigh	mm	250
Spindle Bore Diameter	mm	120
Table indexing angles at full pushbar stroke	deg.	45
Min. indexing angles	deg.	5
Approx. Full pushbar stroke	mm	93
Approx. pushbar load	N [kgf]	1960 [200]
Loadings	kg	450
Allowable Unbalanced weight (differences in load at table periphery)	kg	40
Allowable load (Table clamped)	N-m [kgf-m]	4560 [465]
Accuracy	sec	30
Repeatability	sec	± 3
Weight	kg	214

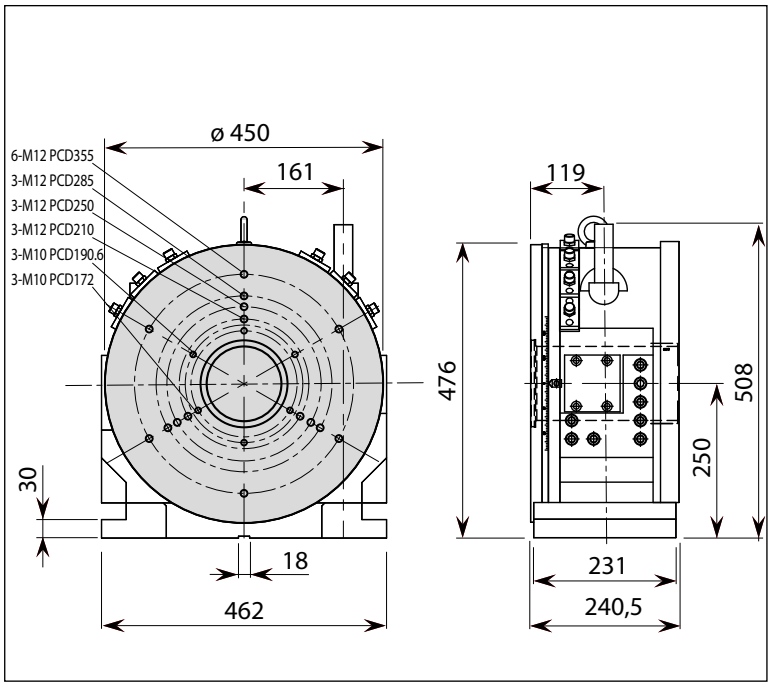

Code	Type	Indexing angles		Pushbar Stroke
		Min°	Max °	mm
51 99 13 59	**FD-107**	**15°**	**45°**	**24**

FD-107

New

SMALLEST TOUCHDEX

Table Dia 107mm

- Light-weight Compact
- Weight: 13kg
- Table indexing angles at full pushbar stroke: 45 deg.
- Min. indexing angles: 15 deg.

The detachable base plate diversifies mounting ways

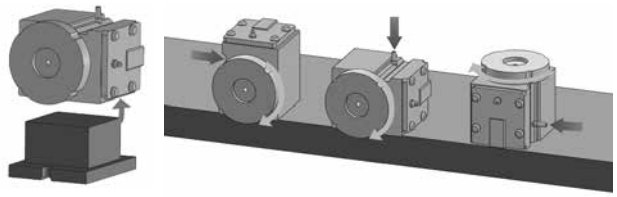

Example of installation

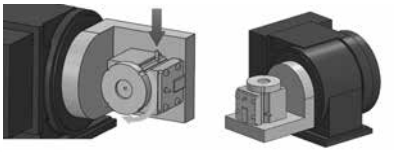

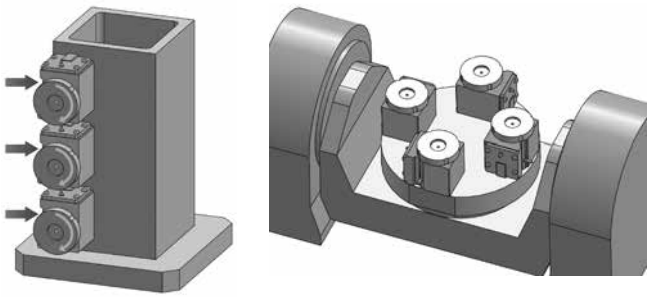

Type		FD-107
Table Diameter	mm	107
Center Heigh	mm	120
Spindle Bore Diameter	mm	-
Table indexing angles at full pushbar stroke	deg.	45
Min. indexing angles	deg.	15
Approx. Full pushbar stroke	mm	24
Approx. pushbar load	N [kgf]	295 [30]
Loadings	kg	20
Allowable Unbalanced weight (differences in load at table periphery)	kg	4
Allowable load (Table clamped)	N-m [kgf-m]	196 [20]
Accuracy	sec	60
Repeatability	sec	± 3
Weight	kg	13

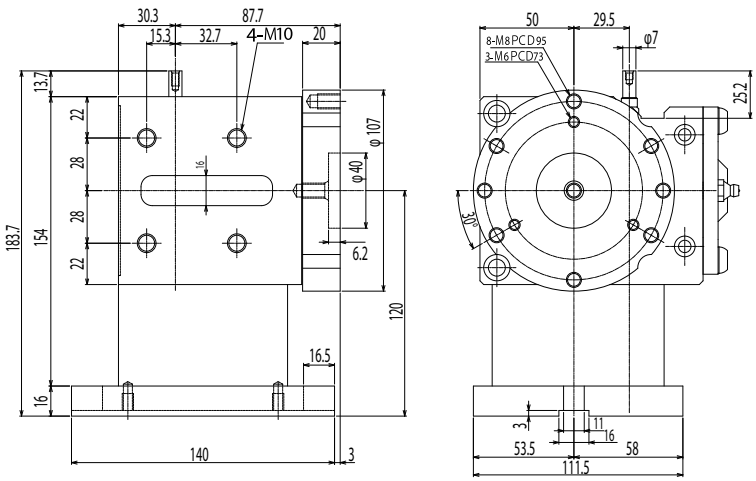

TOLERANCES

Inspecting item	Tollerances	Measurement Method (FD)	Measurement Method (FDM)
Table Center Hole Run-out	0.01 mm	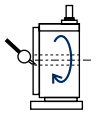	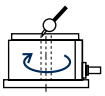
Table Surface Run-out (15 mm inside table periphery)	0.01 mm	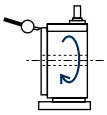	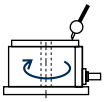
Table Surface Squareness (15 mm inside table periphery)	0.03 mm	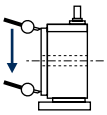	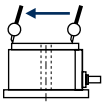

SPECIFICATIONS

Type			FDM-150	FDMK-150-04	FD-200-04
Table diameter		mm	170	170	210
Spindle bore diameter		mm	37	37	16.5
Center height		mm	120	120	135
Table indexing anglesat full pushbar stroke		gradi	45	90	90
Min. indexing angles		gradi	5	5	5
Full pushbar stroke		mm	38	53	78
Approx. pushbar load		N [kgf]	295 [30]	392 [40]	784 [80]
Loadings	vertical use 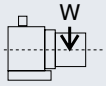	kg	200	200	250
	horizontal use	kg	300	300	---
Allowable unbalanced weight differences in load at table periphery	W_1 - W_2 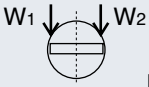	kg	4	20	4
Allowable load (Table clamped)	F x L 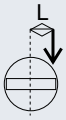	N/m [kgf/m]	588 [60]	588 [60]	1030 [105]
Accuracy		sec	30	30	30
Ripeatability		sec	±3	±3	±3
Weight		kg	30	37	38

Code	Type	Indexing Angles		Pushbar Stroke	A
		Min °	Max °	mm	mm
51 99 13 01	**FDM-150**	**5°**	**45°**	**38**	**127**

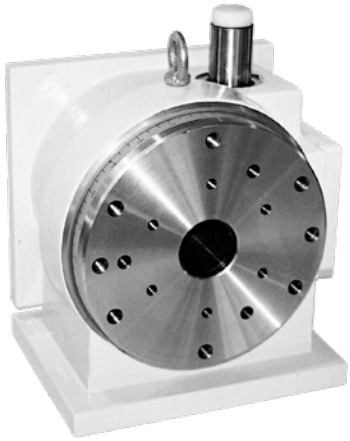

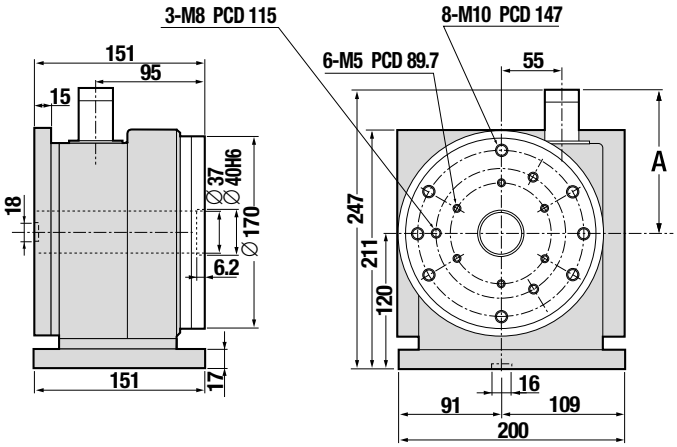

Code	Type	Indexing Angles		Pushbar Stroke	A
		Min °	Max °	mm	mm
51 99 13 16	**FDMK-150-04**	**5°**	**90°**	**53**	**163**

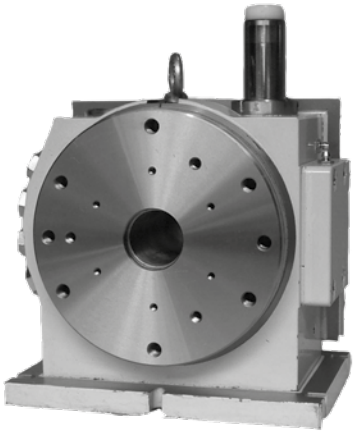

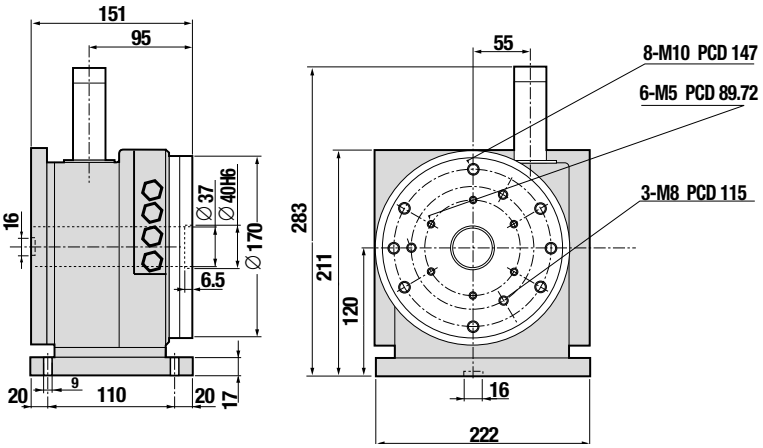

Code	Type	Indexing Angles		Pushbar Stroke	A
		Min °	Max °	mm	mm
51 99 13 02	**FD-200-04**	**5°**	**90°**	**78**	**208**

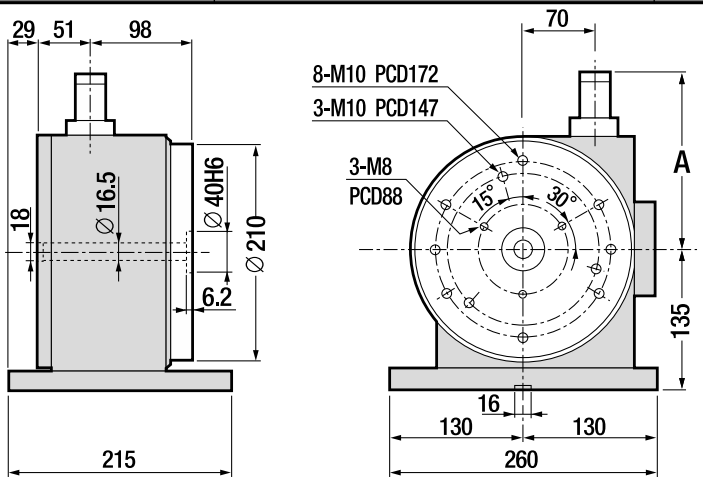

TOLERANCES

Inspecting item	Tollerances	Measurement Method (FD)	Measurement Method (FDM)
Table Center Hole Run-out	0.01 mm	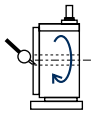	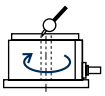
Table Surface Run-out (15 mm inside table periphery)	0.01 mm	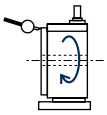	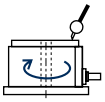
Table Surface Squareness (15 mm inside table periphery)	0.03 mm	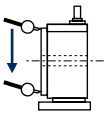	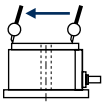

SPECIFICATIONS

Type			FDM-230	FDM 230-360	FDR-230	FDR 230-360	FD-300	FD 300-360	FDMK 340	FDMK 340-360
Table Diameter		mm	230	230	230	230	310	310	340	340
Spindle Bore Diameter		mm	58	58	58	58	52	52	100	100
Center Height		mm	145	145	145	145	185	185	200	200
Table Indexing Angles at Full Pushbar Stroke		deg.	45	45	45	45	45	45	45	45
Min. Indexing Angles		deg.	5	1	5	1	5	1	5	1
Full Pushbar Stroke		mm	56	56	56	56	75	75	83	83
Approx. Pushbar Load		N [kgf]	784 [80]	784 [80]	1470 [150]	1470 [150]	1078 [110]	1078 [110]	1764 [180]	1764 [180]
Loadings	Vertical use	kg	250	250	250	250	350	350	350	350
	Horizontal use	kg	350	350	350	350	500	500	500	500
Allowable Unbalanced weight (differences in load at table periphery)	W_1 - W_2 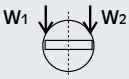	kg	4	4	20	20	4	4	20	20
Allowable load (Table clamped)	F x L 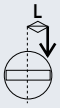	N/m [kgf/m]	1127 [115]	1127 [115]	1127 [115]	1127 [115]	2280 [232.5]	2280 [232.5]	2280 [233]	2280 [233]
Accuracy		sec	30	30	30	30	30	30	30	30
Repeatability		sec	±3	±3	±3	±3	±3	±3	±3	±3
Weight		kg	42	42	48	48	80	80	98	98

Code	Model	Indexing Angles Min	Indexing Angles Max	Pushbar Stroke mm	A mm
51 99 13 04	FDM-230	5°	45°	56	198
51 99 13 05	FDM-230-360	1°	45°	56	198

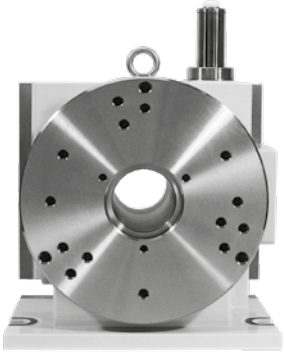

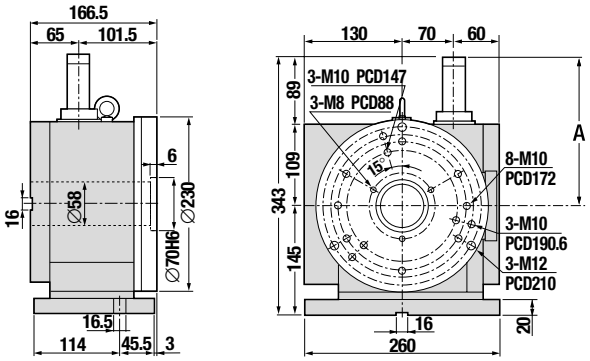

Code	Model	Indexing Angles Min	Indexing Angles Max	Pushbar Stroke mm	A mm
51 99 13 06	FDR-230	5°	45°	56	198
51 99 13 60	FDR-230-360	1°	45°	56	198

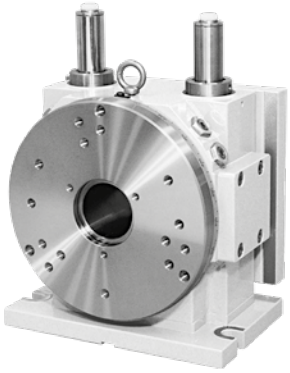

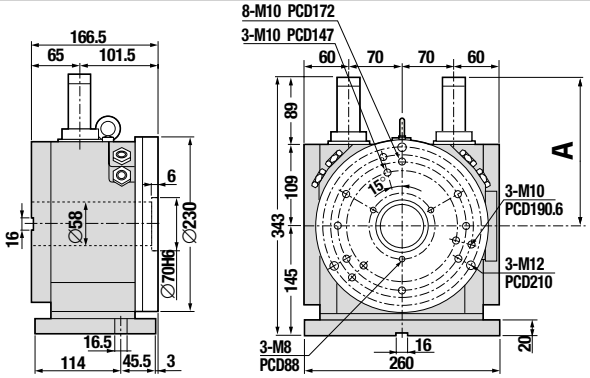

Code	Model	Indexing Angles Min	Indexing Angles Max	Pushbar Stroke mm	A mm
51 99 13 07	FD-300	5°	45°	75	233
51 99 13 08	FD-300-360	1°	45°	75	233

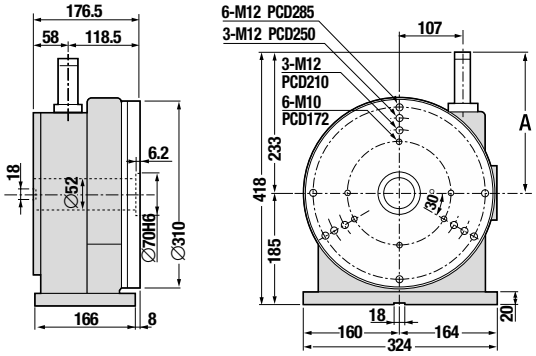

Code	Model	Indexing Angles Min	Indexing Angles Max	Pushbar Stroke mm	A mm
51 99 13 18	FDMK-340	5°	45°	83	240,5
51 99 13 19	FDMK-340-360	1°	45°	83	240,5

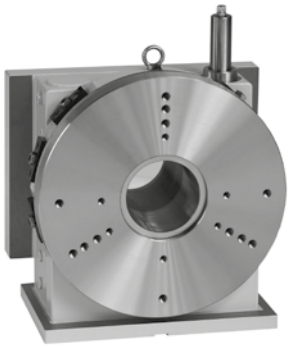

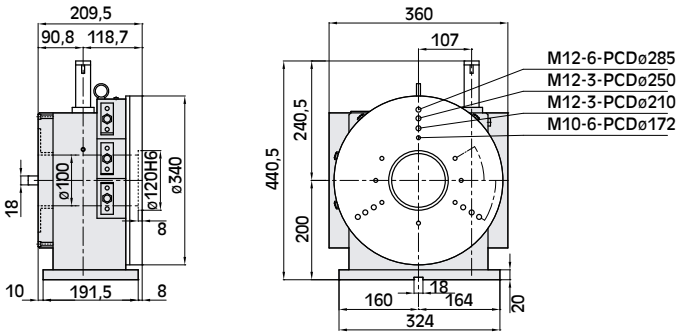

Code	Model	Indexing Angles		Pushbar Stroke	A
		Min	Max	mm	mm
51 99 13 11	**FDV-201-04**	**5°**	**90°**	**78**	**208**

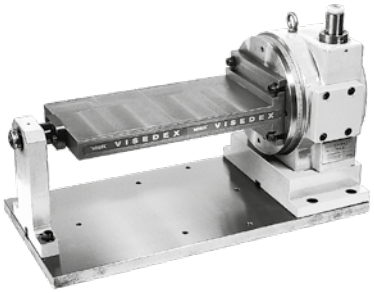

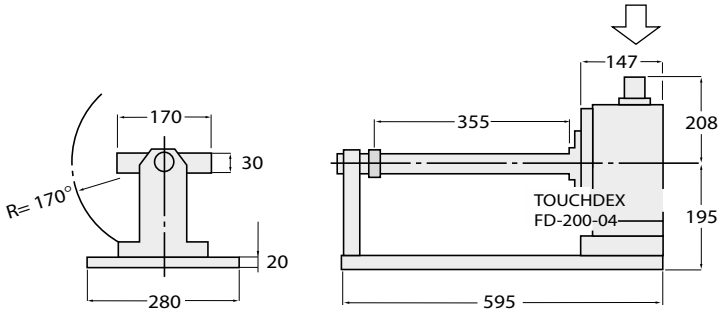

Code	Model	Indexing Angles		Pushbar Stroke	A
		Min	Max	mm	mm
51 99 13 12	**FDV-301**	**5°**	**45°**	**75**	**233**

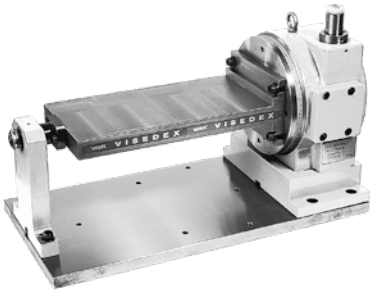

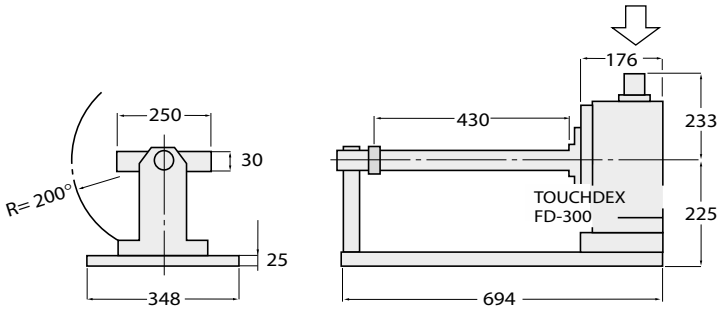

Examples

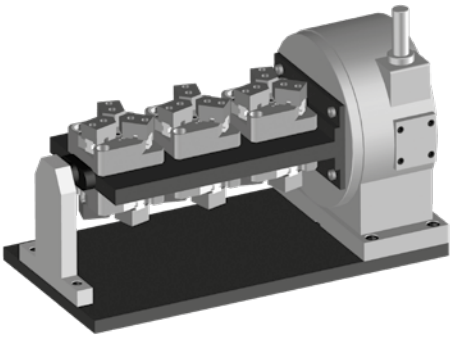

With SC square chuck

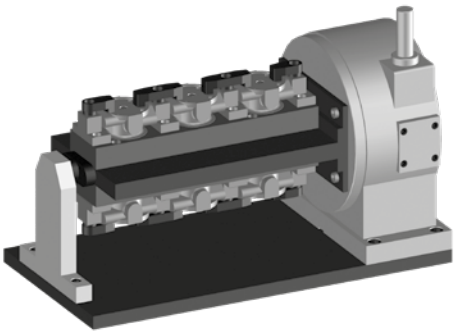

With clamping devices

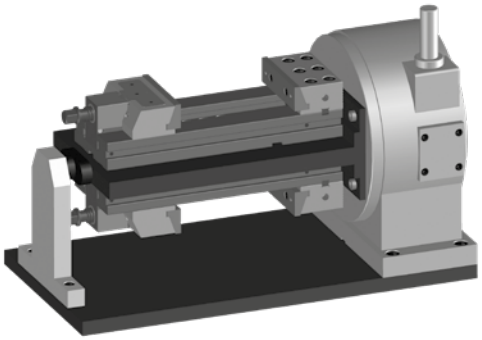

With TC-t clamping system

Code	type
51 99 13 13	TL 230-150

Code	type
51 99 13 14	TL 340-230

Integrates FDR-230 and FDM-150 + FDR-340 and FDM-230 for five-face machining on vertical machining centers.

- Table inclination and rotation adjusted automatically with the pushbar of TOUCHDEX.
- Minimum indexing angle in both inclination and rotation of 5°.
- Extremely compact footprint - 450 x 260 mm.

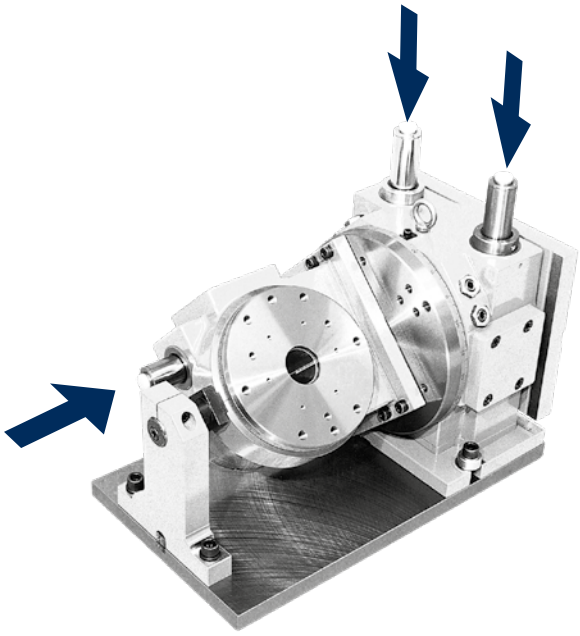

Specifications			TL 230-150	TL 340-230
Table Diameter		mm	170	230
Spindle Bore Diameter		mm	37	58
Center Height (90° Tilted)		mm	145	200
Table surface height (0 deg. tilted)		mm	200	265
Full Pushbar Stroke (Tilting)		mm	56	83
Full Pushbar Stroke (Rotation)		mm	38	56
Approx. Pushbar Load (Tilting)		N [kgf]	1470 [150]	1764 [180]
Approx. Pushbar Load (Rotation)		N [kgf]	295 [30]	1470 [150]
Loadings (0° to 90°) 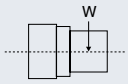		kg	70	100
Allowable load (Table clamped)	FxL 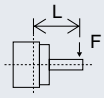	N·m [kgf·m]	1127 [115]	1960 [200]
	FxL	N·m [kgf·m]	625 [63.8]	1.127 [115]
Accuracy	(Tilting)	sec	30	30
Accuracy	(Rotation)	sec	30	30
Repeatability	(Tilting)	sec	±3	±3
Repeatability	(Rotation)	sec	±3	±3
Weight		kg	98	215

* A counterweight may be required for balance when machining bar-shaped workpieces etc mounted significantly off-center on the

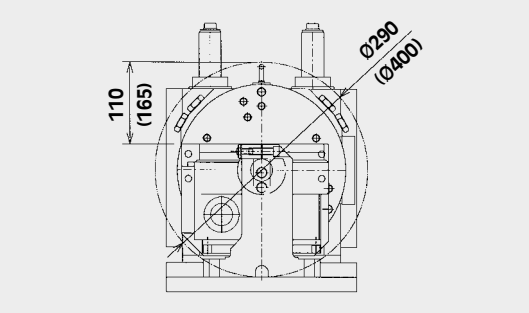

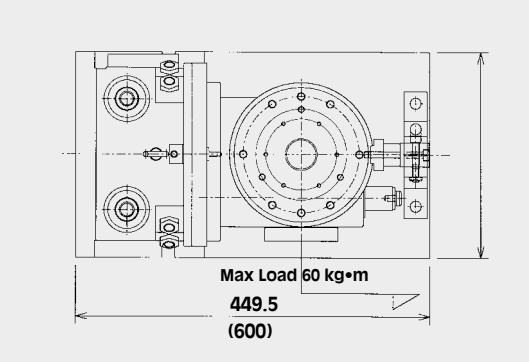

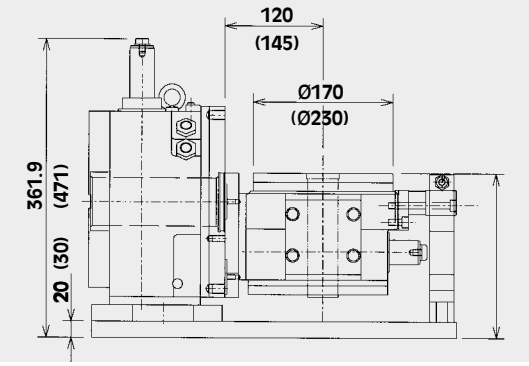

TAIL STOCK TK3

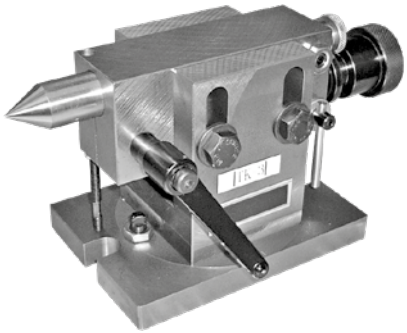

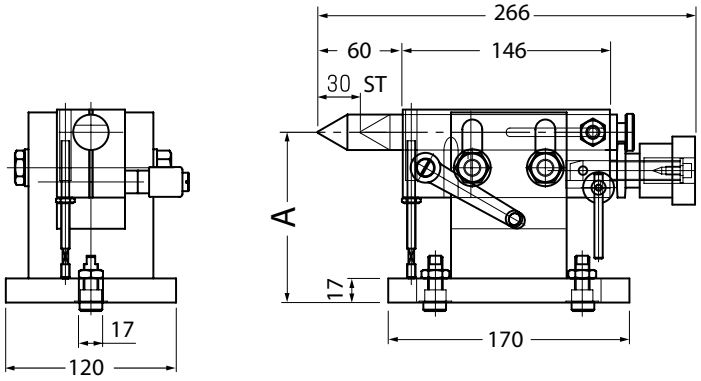

Code	type	A (mm)
51 99 13 21	TK-3	120 - 145
51 99 13 22	TK-3 HI	160 - 185

END SUPPORT

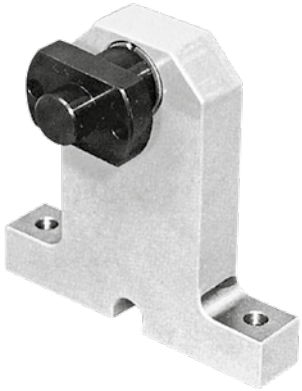

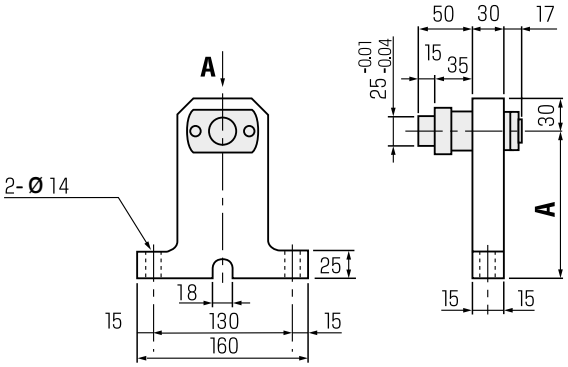

Code	type	A (mm)
51 99 13 23	FES-120	120
51 99 13 24	FES-135	135
51 99 13 25	FES-145	145
51 99 13 26	FES-175	175
51 99 13 27	FES-185	185
51 99 13 28	FES-200	200

MANUAL HANDLE

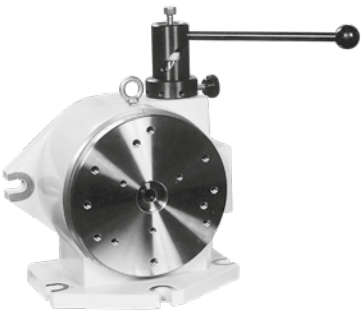

MH-2

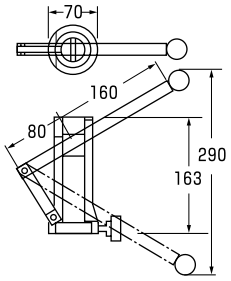

MH-3

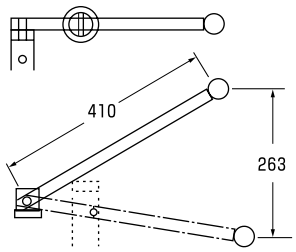

MH-1

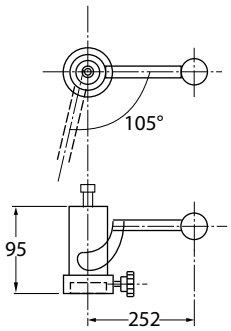

MH-5

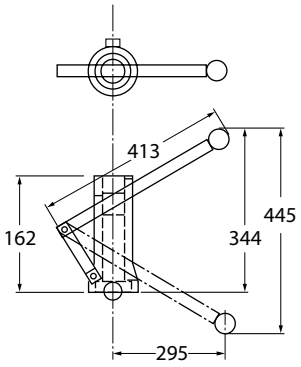

Code	type	stroke
51 99 13 30	MH-1	35
51 99 13 31	MH-2	88
51 99 13 32	MH-3	38
51 99 13 48	MH-5	95

Type	Tailstok	Manual handle	End support
FDM-150	TK-3	MH-3	FES-120
FDR-150-04 (MK)	TK-3	MH-2	FES-120
FD (M)-200 (-360)	TK-3	MH-1	FES-135
FD (M)-200-04	TK-3	MH-2	FES-135
FD (M,R)-230 (-360) (MK)	TK-3	MH-2	FES-145
FDR-230-04 (-360) (MK)	TK-3-HI	MH-2	FES-175
FDM-300	TK-3-HI	MH-2	FES-185
FDMK-340 (-360)	----------	MH-5	FES-200
FDK-450	----------	MH-6	----------

K67

Code		
10 73 12 23	Cartridge 500 g	Grease K67
10 73 12 24	Can 1000 g	Grease K67

GREASING KIT

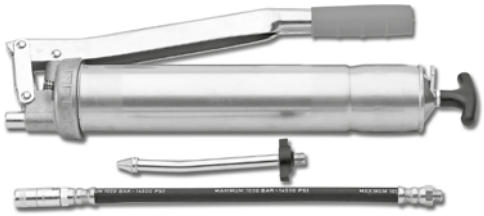

Code
08 37 26

MOUNTING FLANGE FOR MANUAL CHUCK

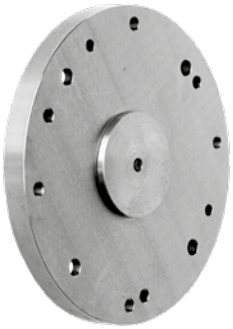

Codice	for type	for chuck	D (mm)
51 99 13 41	FDM-150	SGSF 160-42	170
51 99 13 42	FD-200-04 / FD-200-360 FDM-230 / FDM-230-360 / FDR-230	SGSF 200-55	210
51 99 13 43	FD-300 / FD-300-360 FDMK-340 / FDMK-340-360	SGSF 315-103	310
51 99 13 47	FDK-450	SGSF 400-136	450

PAIR OF KEYS

Code	mm
51 99 13 51	16 x 14
51 99 13 52	16 x 16
51 99 13 53	16 x 18
51 99 13 54	18 x 14
51 99 13 55	18 x 16
51 99 13 56	18 x 18

SGSF MANUAL CHUCK (frontal mounting)

SMW self-centering manual chuck, steel body

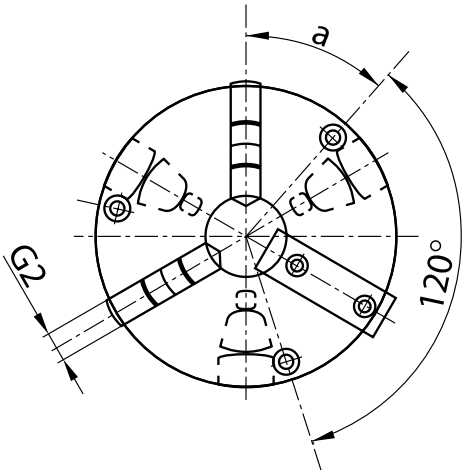

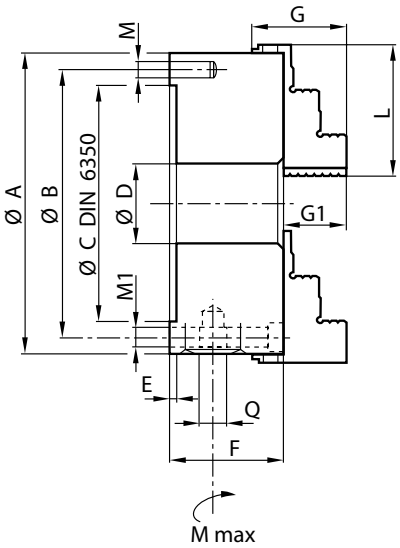

Code		33 03 12 16	33 03 12 20	33 03 12 31	33 03 12 40
Chuck		**SGSF 160-42**	**SGSF 200-55**	**SGSF 315-103**	**SGSF 400-136**
Attachement DIN 6350	Dim.	**FL125**	**FL160**	**FL260**	**FL330**
	A mm	**160**	**200**	**315**	**400**
	B mm	**140**	**176**	**286**	**362**
H6	C mm	**125**	**160**	**260**	**330**
	D mm	**42**	**55**	**103**	**136**
	E mm	**4**	**4**	**5**	**5**
	F mm	**68**	**78**	**96,2**	**108**
	G mm	**53**	**54**	**73**	**92**
	G_1 mm	**32**	**29**	**41**	**55**
	G_2 mm	**20**	**25**	**32**	**36**
	L mm	**70**	**85**	**125**	**145**
Front mounting	M_1 mm	**3xM10**	**3xM10**	**3xM16**	**3xM16**
	Q mm	**11**	**11**	**14**	**17**
	a °	**102°**	**42°**	**42°**	**45°**
Max speed	giri/min.	**4500**	**4000**	**2800**	**2000**
Torque M max	N•m	**120**	**160**	**200**	**280**
Weight (w. jaws)	kg	**11,2**	**20**	**50**	**90**
Moment of inertia	kgm^2	**0,03**	**0,10**	**0,60**	**1,80**

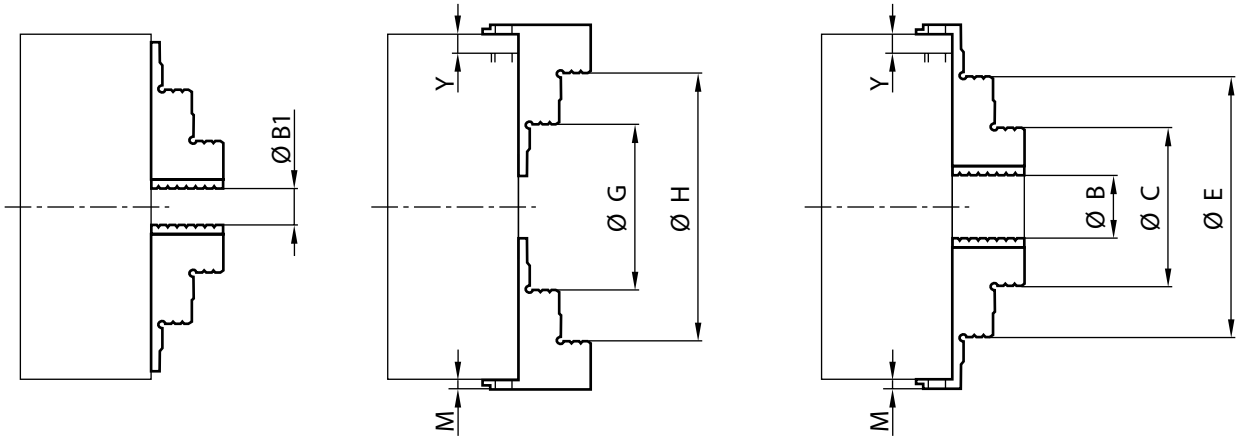

Chuck		SGSF 160-42	SGSF 200-55	SGSF 315-103	SGSF 400-136
Suggested clamping diameters at max. clamping force					
Monoblock jaws	B mm	**19-56**	**22-75**	**58-115**	**77-162**
	G mm	**64-101**	**78-130**	**129-199**	**169-254**
	H mm	**113-150**	**146-198**	**226-296**	**295-380**
	C mm	**57-94**	**68-121**	**128-184**	**149-234**
	E mm	**109-146**	**136-189**	**212-281**	**275-360**
	Y mm	**0**	**4**	**9**	**16**
	M mm	**18**	**22**	**25**	**26**
Min. clamping diameters with clamping force reduced by 40%					
		3	**4**	**10**	**10**

No. of scroll teeth	**2**	**3**	**5**	**5**
No. of meshing scroll teets for safety clamping	**2**	**3**	**5**	**5**

- For max. speed and max. clamping, all teeth shall be meshing.
- For meshing teeth control towards outside dimension (M) toward inside dimension (Y).
- For features exceeding these limits ±16 mm on diameter, shall be reduced by 25%.
- ATTENTION: CLAMPING DIAMETERS HAVE BEEN CALCULATED WITH A.M. MESHING TEETH.

Chuck	SGSF 160-42	SGSF 200-55	SGSF 315-103	SGSF 400-136
Accessories	Codici			
Set-3 GRC	**03 65 16 30**	**03 65 20 30**	**03 65 31 30**	**03 65 40 30**
Set-3 Soft jaws	**03 60 16 30**	**03 60 20 30**	**03 60 31 30**	**03 60 40 30**
Set-3 ins. jaws Dx	**03 55 16 30**	**03 55 20 30**	**03 55 31 30**	**03 55 40 30**
Set-3 ins. jaws Sx	**03 56 16 30**	**03 56 20 30**	**03 56 31 30**	**0356 40 30**
Set-3 Rev. jaws	**03 63 16 30**	**03 63 20 30**	**03 63 31 30**	**03 63 40 30**
Key	**02 71 17 00**		**02 71 31 00**	**02 71 40 00**

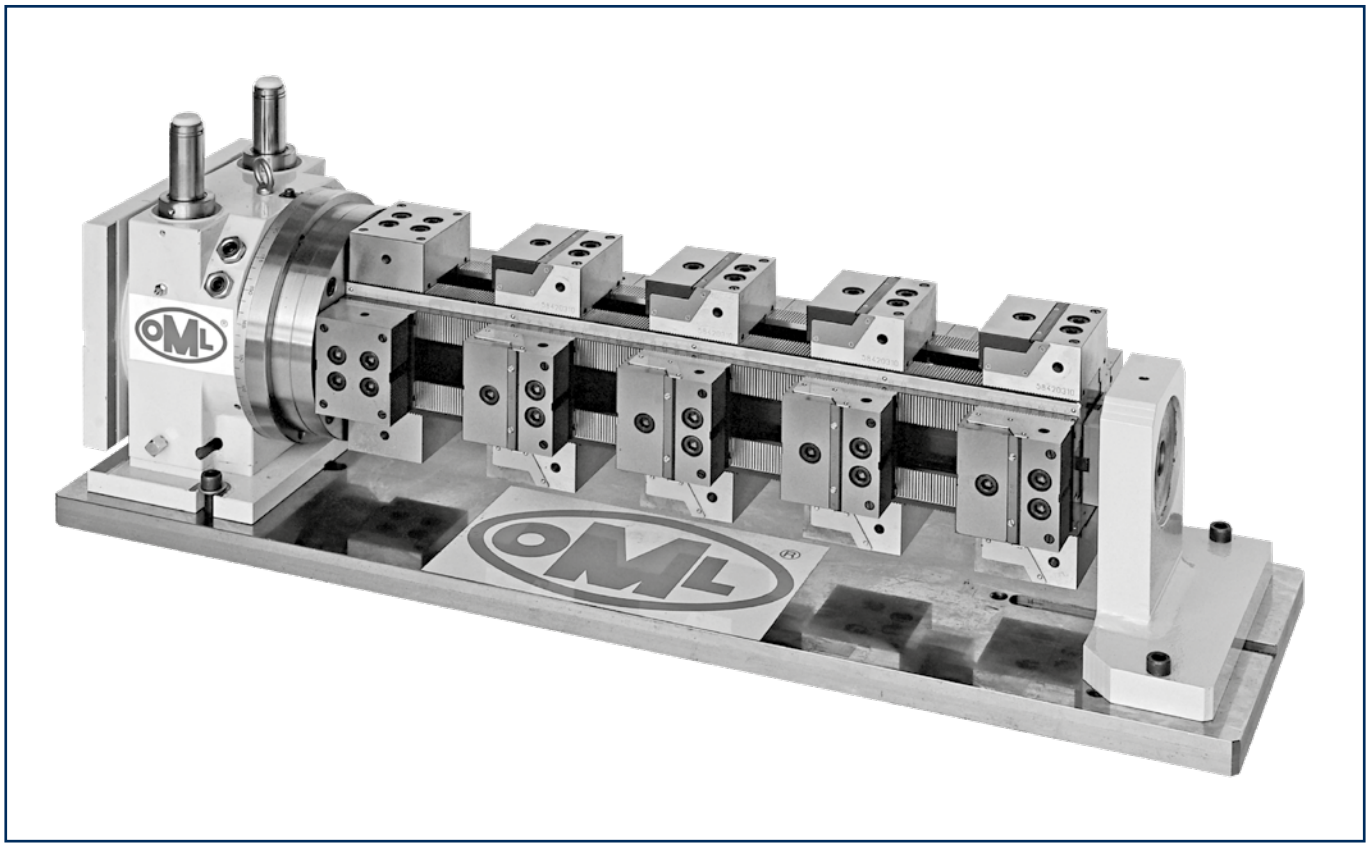

The example shows:

- TOUCHDEX table
- Column CIVI 2000 (General catalogue OML group 6)
- Moveable jaws set CIVI 2000 (General catalogue OML group 6)

The example shows:

- TOUCHDEX table with manual chuck

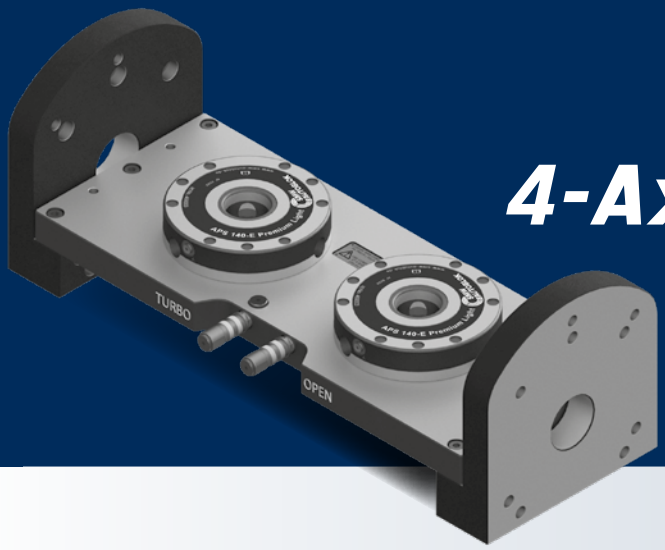

4-Axis Workholding

Clamping systems for rotary tables

APS 140
- Flange

Page 16.4

APS 140
- Pin

Page 16.5

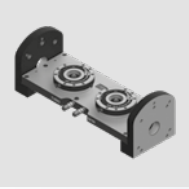

APS 140
- Multiple trunnion
- Smooth trunnion
- Grid trunnion

Page 16.6

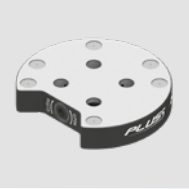

PLUS 5 INDEX
- Plus 5 INDEX 52
- Plus 5 INDEX 96
- Plus 5 INDEX All in One 52/96

Page 16.9

PLUS 5
- Multiple trunnion Plus 5 - 52
- Trunnion Plus 5 - 96
- Multiple trunnion Plus 5 - 96

Page 16.12

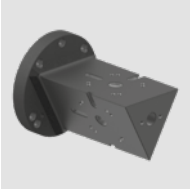

IMG
- Triangular tombstone for IMG 88-130

Page 16.15

Y CHUCK
- Trunnion for Y CHUCK
- Static chuck
- Flanges for chuck

Page 16.16

CHUCKS
- SGSF Manual chuck

Page 16.19

CIVI-CN
- CIVI 2000 Column

Page 16.20

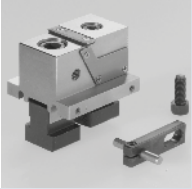

CIVI 2000
- Multiple clamping system

Page 16.21

4-AXIS Workholding

Clamping systems for rotary tables

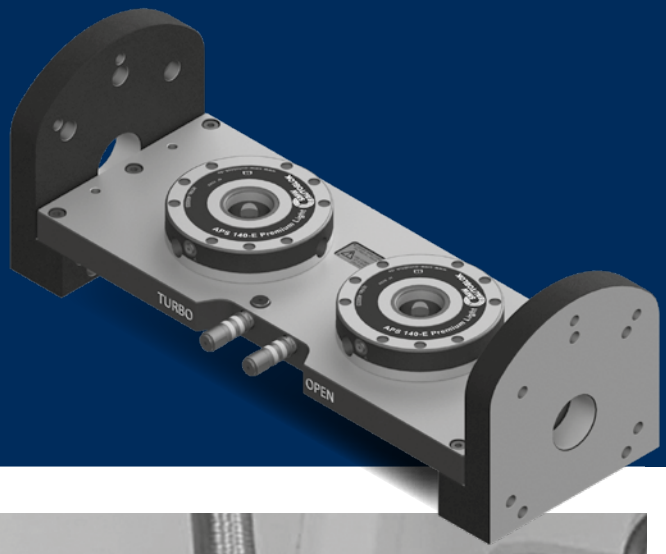

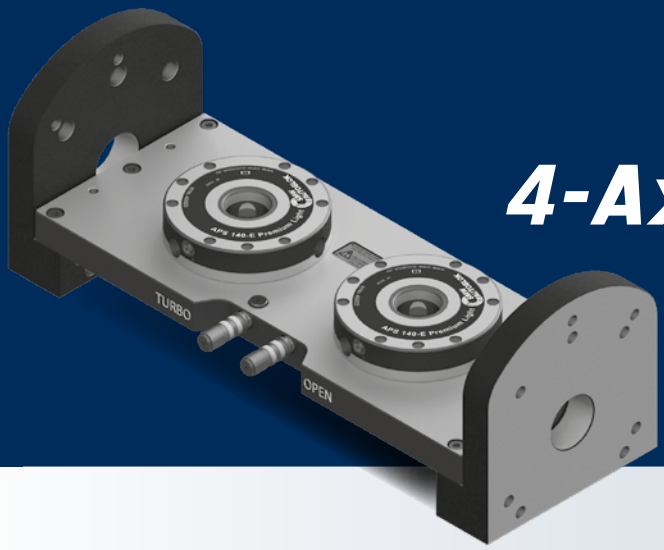

4-Axis Workholding

Clamping systems for rotary tables

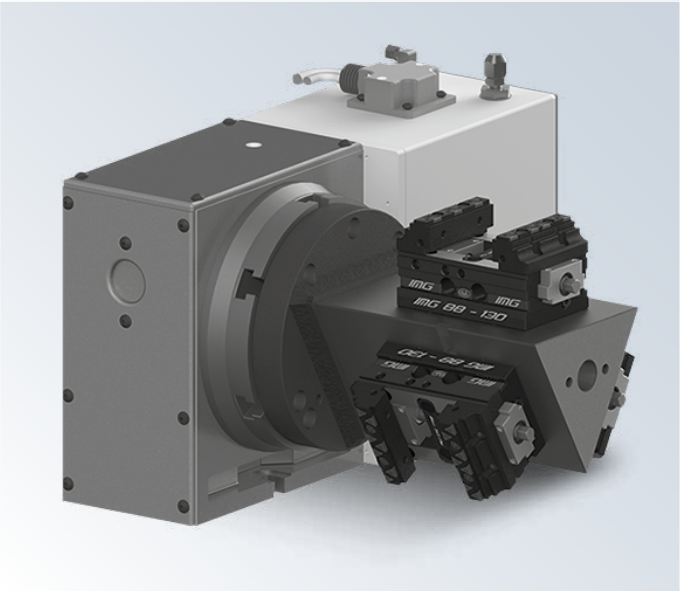

The growing demand for high-precision components in strategic sectors such as automotive, aerospace, medical, and electronics has led to widespread adoption of CNC rotary tables.

These devices play a crucial role in production, and thanks to their characteristics, rotary tables have become an essential tool for manufacturing complex, high-quality parts capable of meeting the most stringent technical specifications.

OML positions itself as an innovative and reliable technology partner, offering a comprehensive range of standard products and special solutions designed to optimize productivity and enhance the performance of these indexed rotary tables.

Through in-depth application expertise and a continuous commitment to innovation, OML supports companies in achieving higher levels of efficiency, precision, and competitiveness

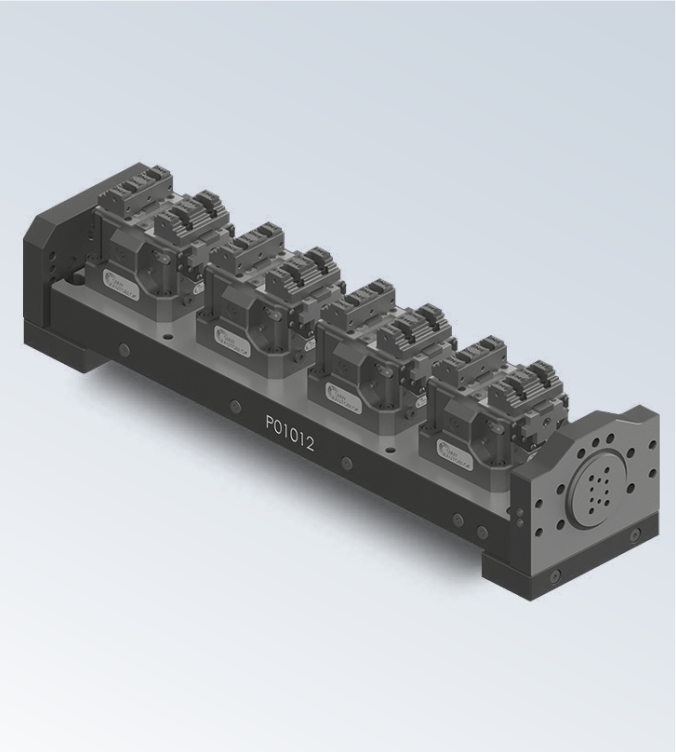

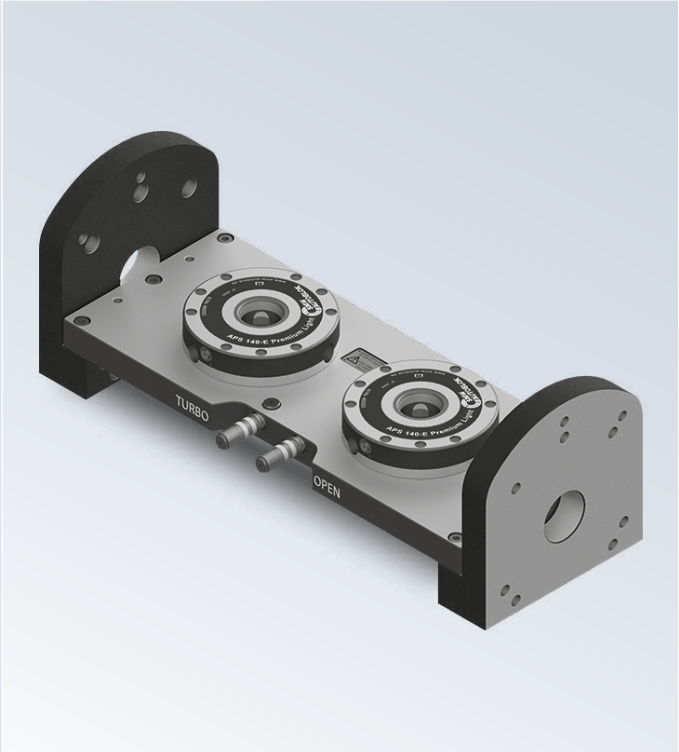

APS 140

FLANGE

Application
- Flange for CNC indexing tables with T-slots flange
- Included 1 modul APS 140 Premium

Technical features
- 3 clamping jaws
- Repeatability < 0.005 mm
- Turbo function to increase the clamping force (without Turbo 7.5 kN)
- Anti rotation key
- Air sensing
- Air cleaning
- Fully sealed (proofline)

Standard equipment
Flange with 1 APS 140 module for indexing tables and for orientation on indexing tables with T-slots

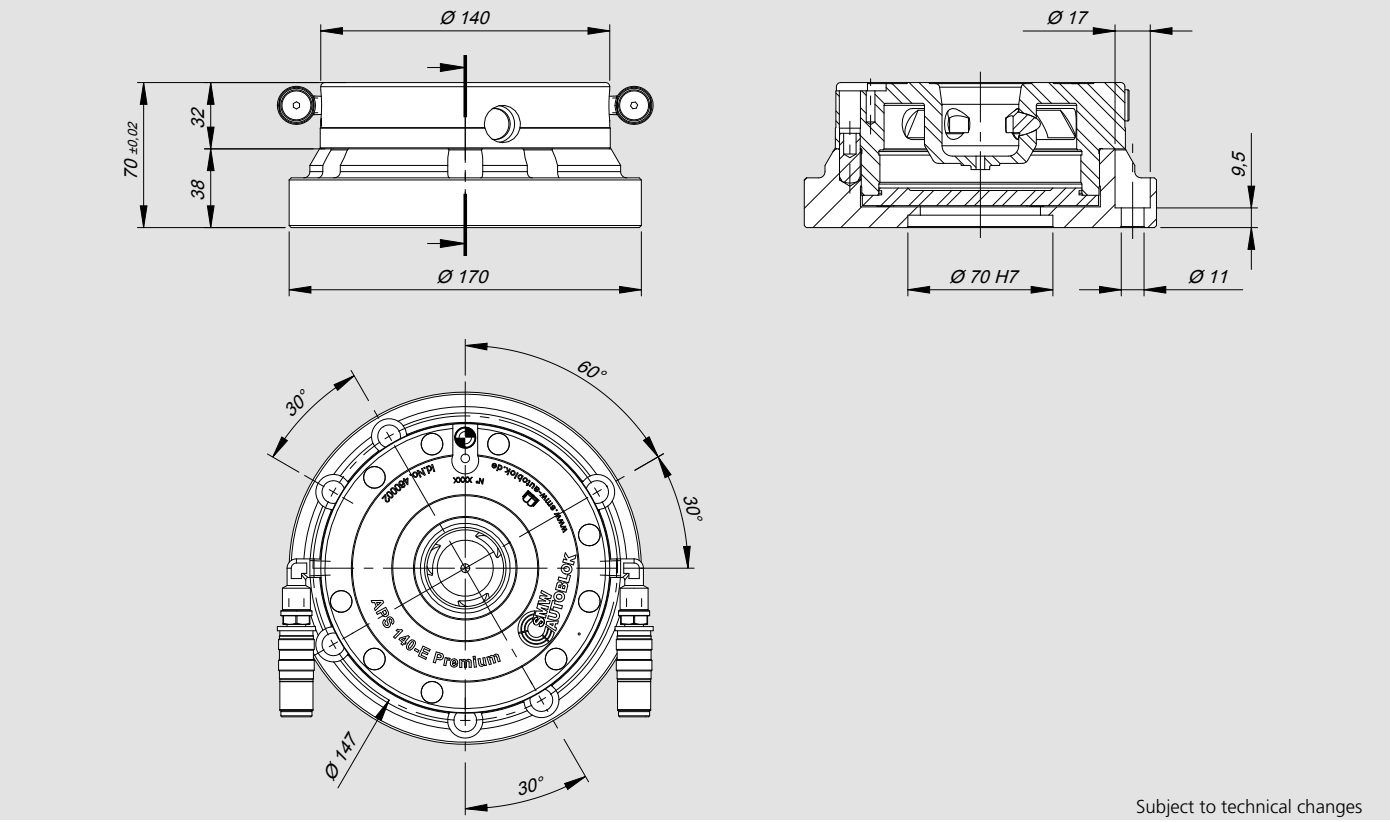

Subject to technical changes

Id. No.	Weight (Kg)
46167620	17

Application example

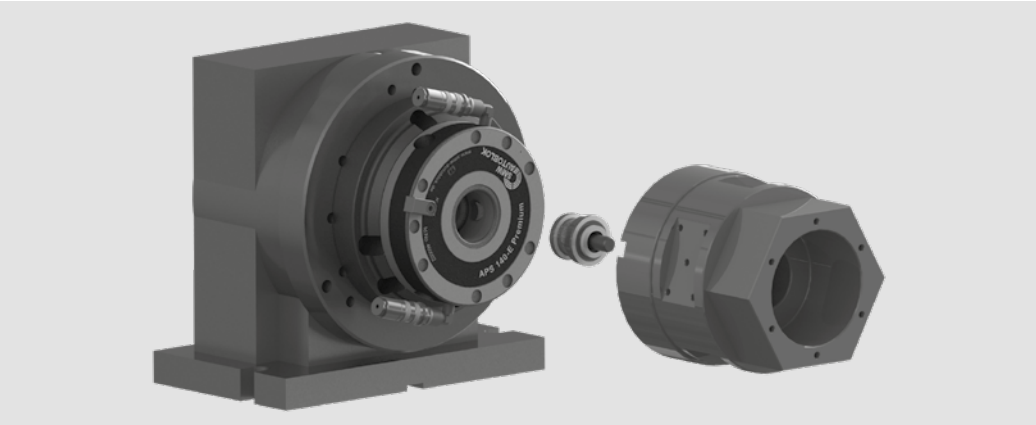

M12 thread

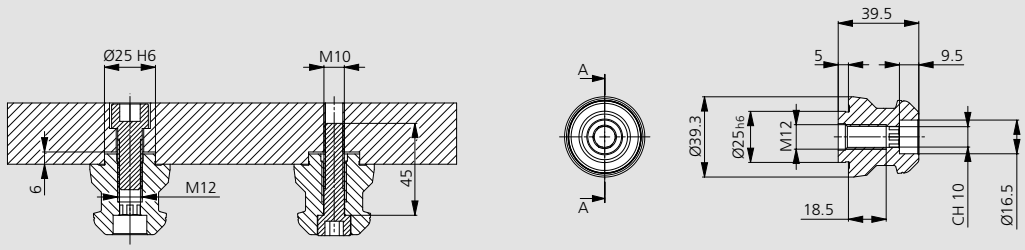

Subject to technical changes

Id. No.	type		Weight (Kg)
46162355	A	M12	0.2
46162356	B	M12	0.2
46162357	C	M12	0.2

M16 thread

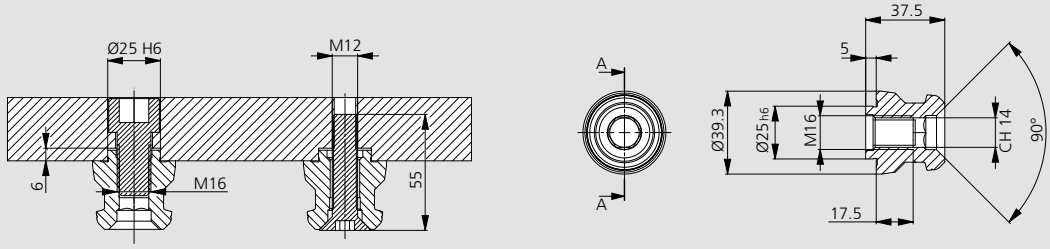

Subject to technical changes

Id. No.	type		Weight (Kg)
46162455	A	M16	0.2
46162456	B	M16	0.2
46162457	C	M16	0.2

Key for single use

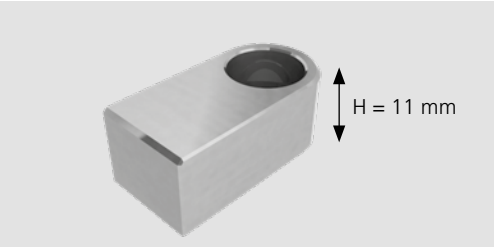

Id. No.
58351312

APS 140

MODULAR TRUNNION FOR APS 140

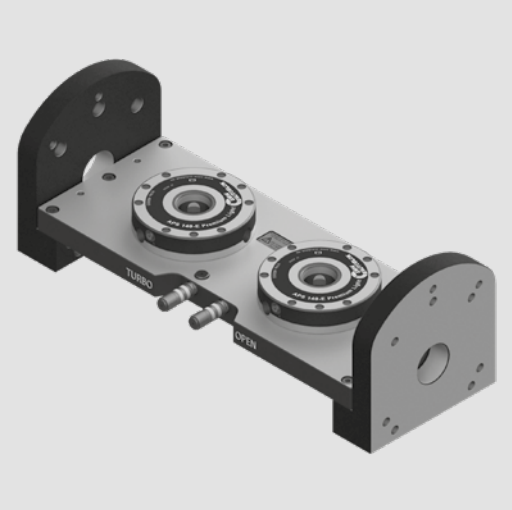

Complete with APS 140 premium Light

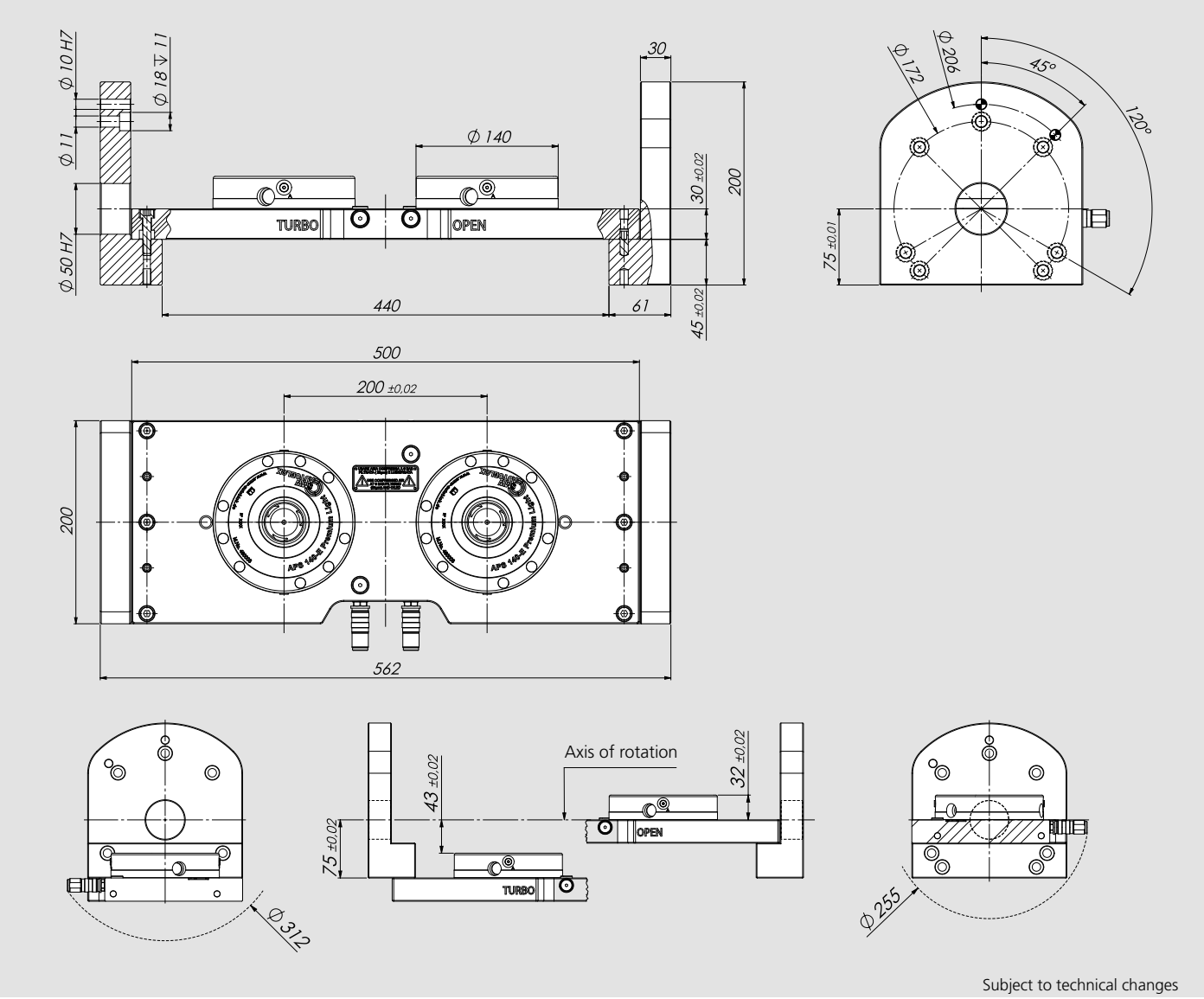

Subject to technical changes

Id. No.	Weight (Kg)
50191454	46

APS 140

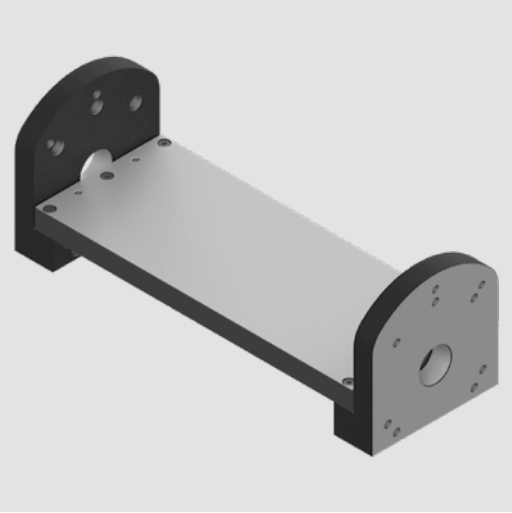

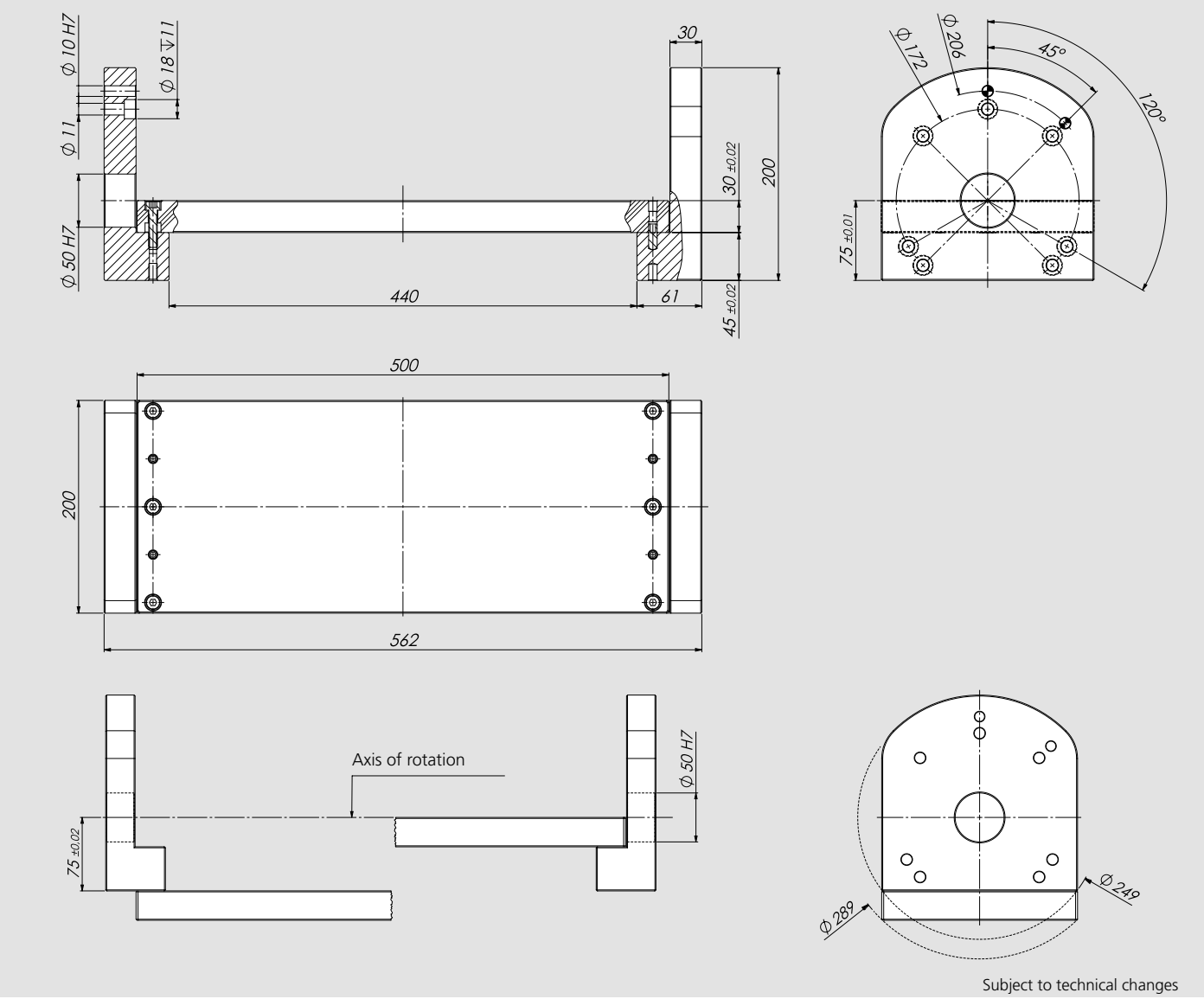

Subject to technical changes

Id. No.	Weight (Kg)
50191450	43

APS 140

MODULAR TRUNNION WITH GRID

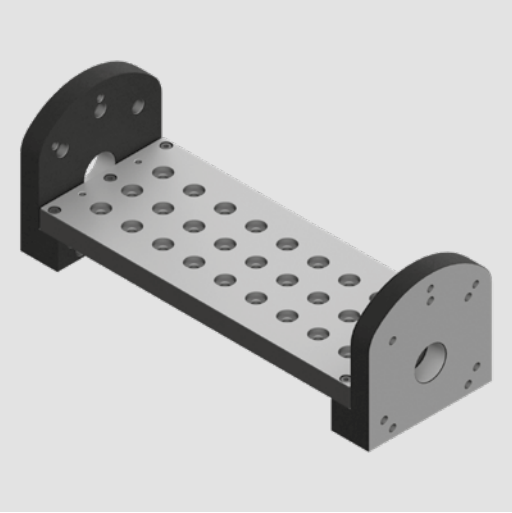

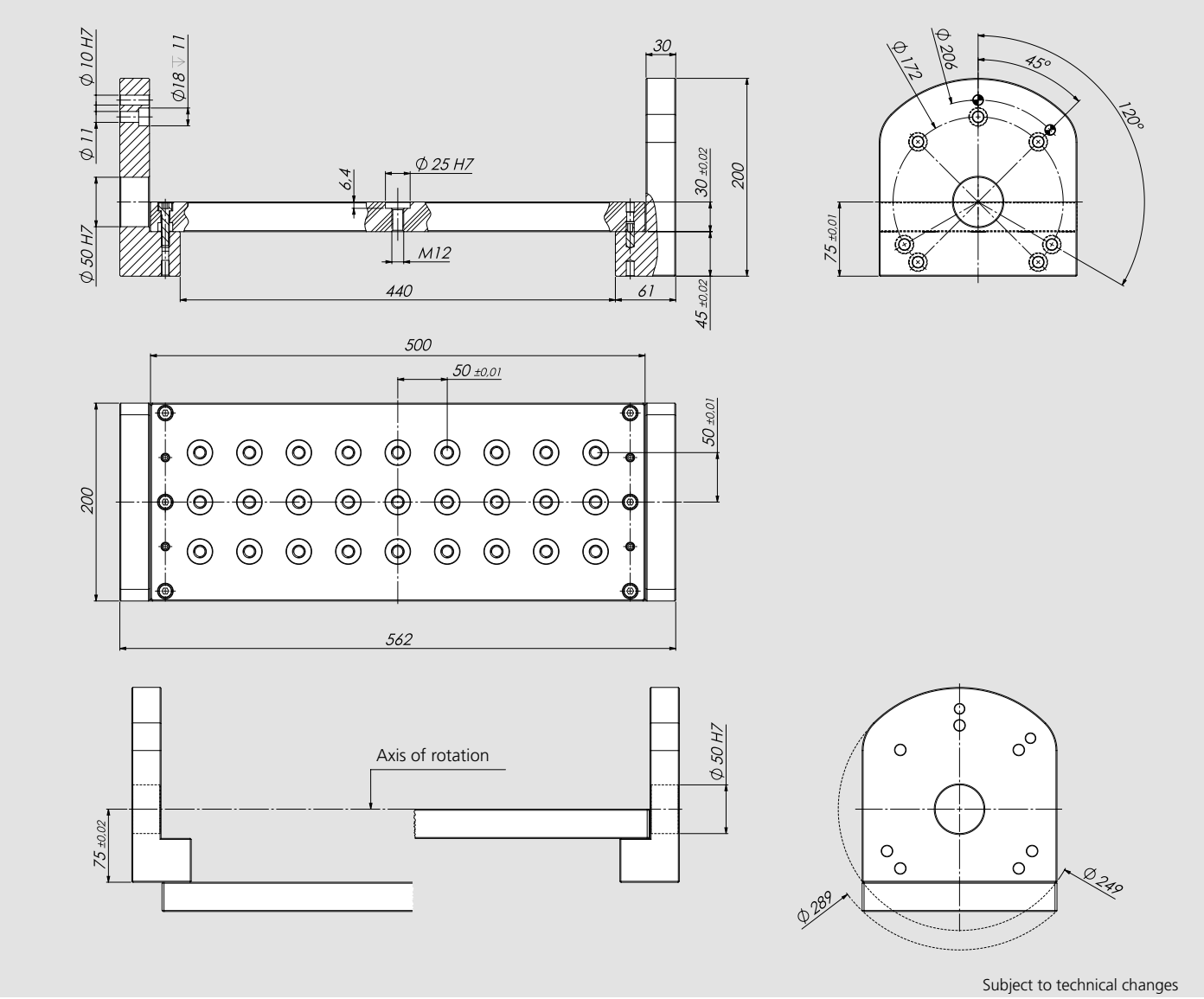

Subject to technical changes

Id. No.	Weight (Kg)
50191452	42

PLUS 5 INDEX 52

- Complete with wrench 10mm
- Pins not included

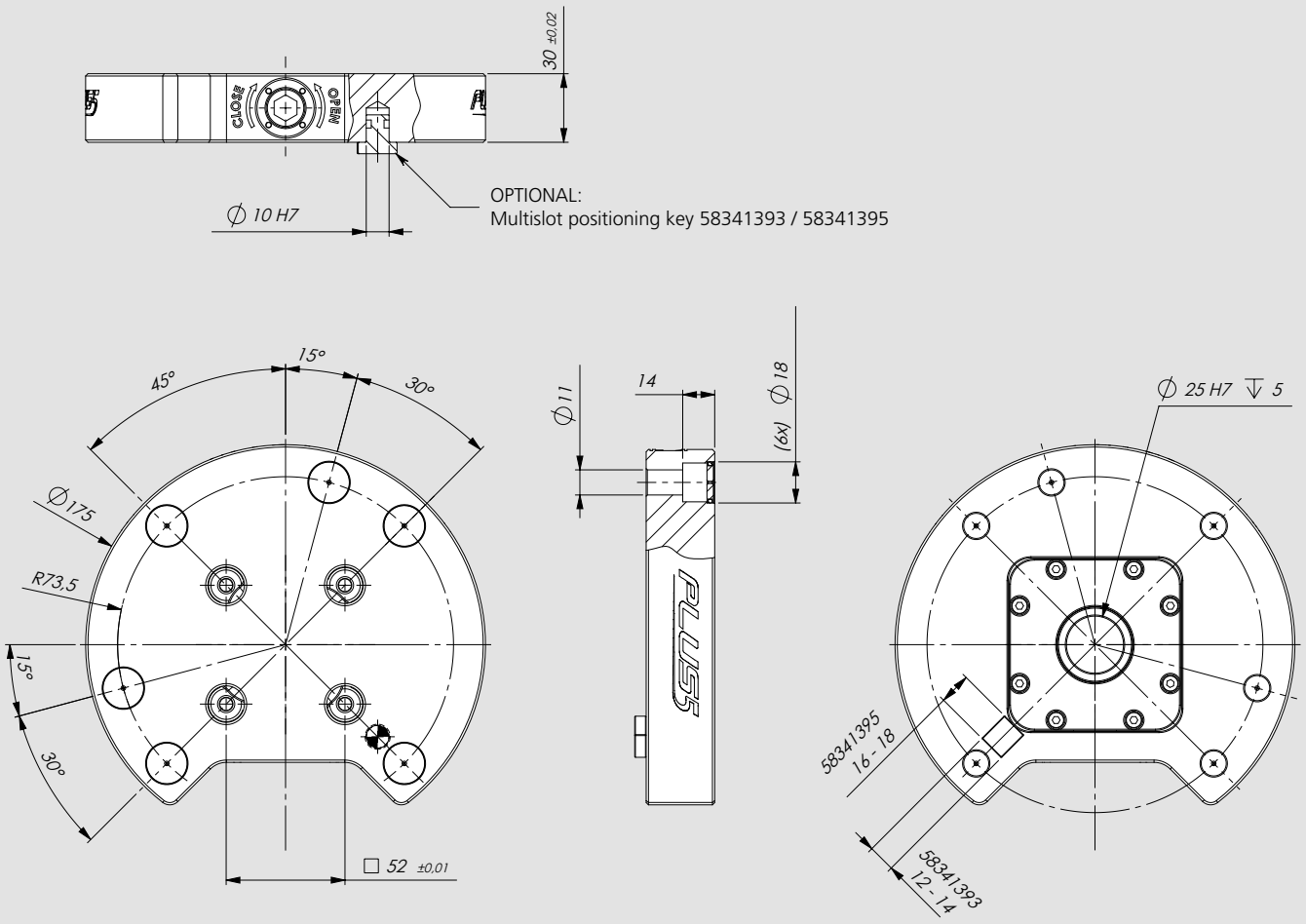

Subject to technical changes

Id. No.	Weight (Kg)
46240111	6

PLUS 5 INDEX 96

PLUS 5 INDEX - Mechanical Zero Point system

- Complete with wrench 10mm
- Pins not included

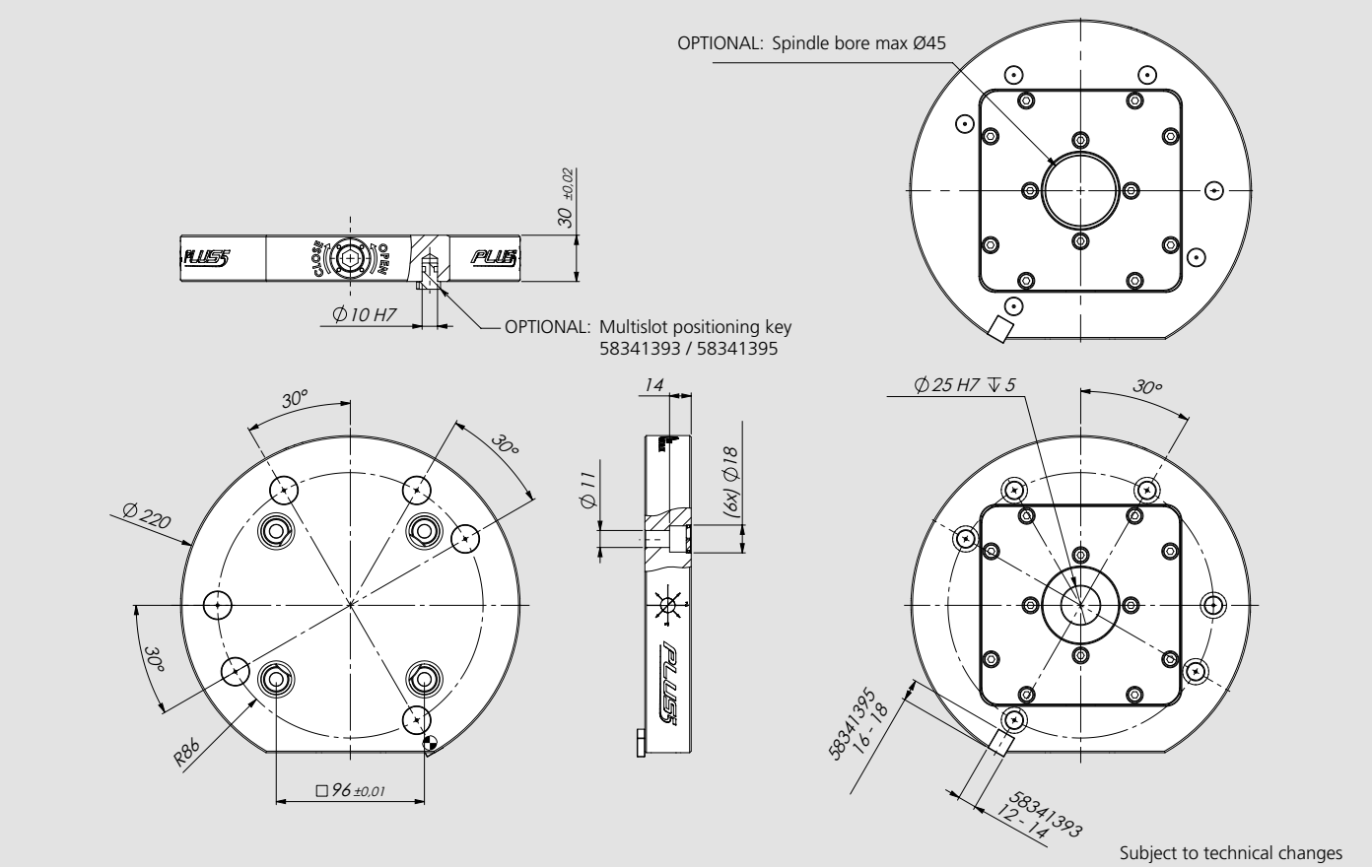

Id. No.	Weight (Kg)
46240112	8

Application example

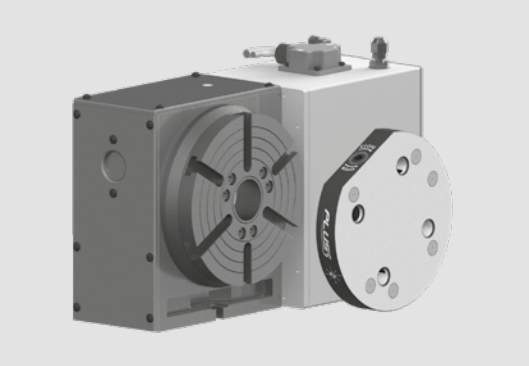

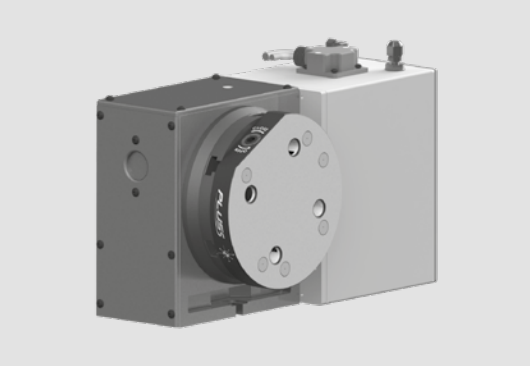

PLUS 5 INDEX All in One 52/96

- Complete with:
  - wrench 10mm
  - protection caps (Plus 5 - 96)
- Pins not included

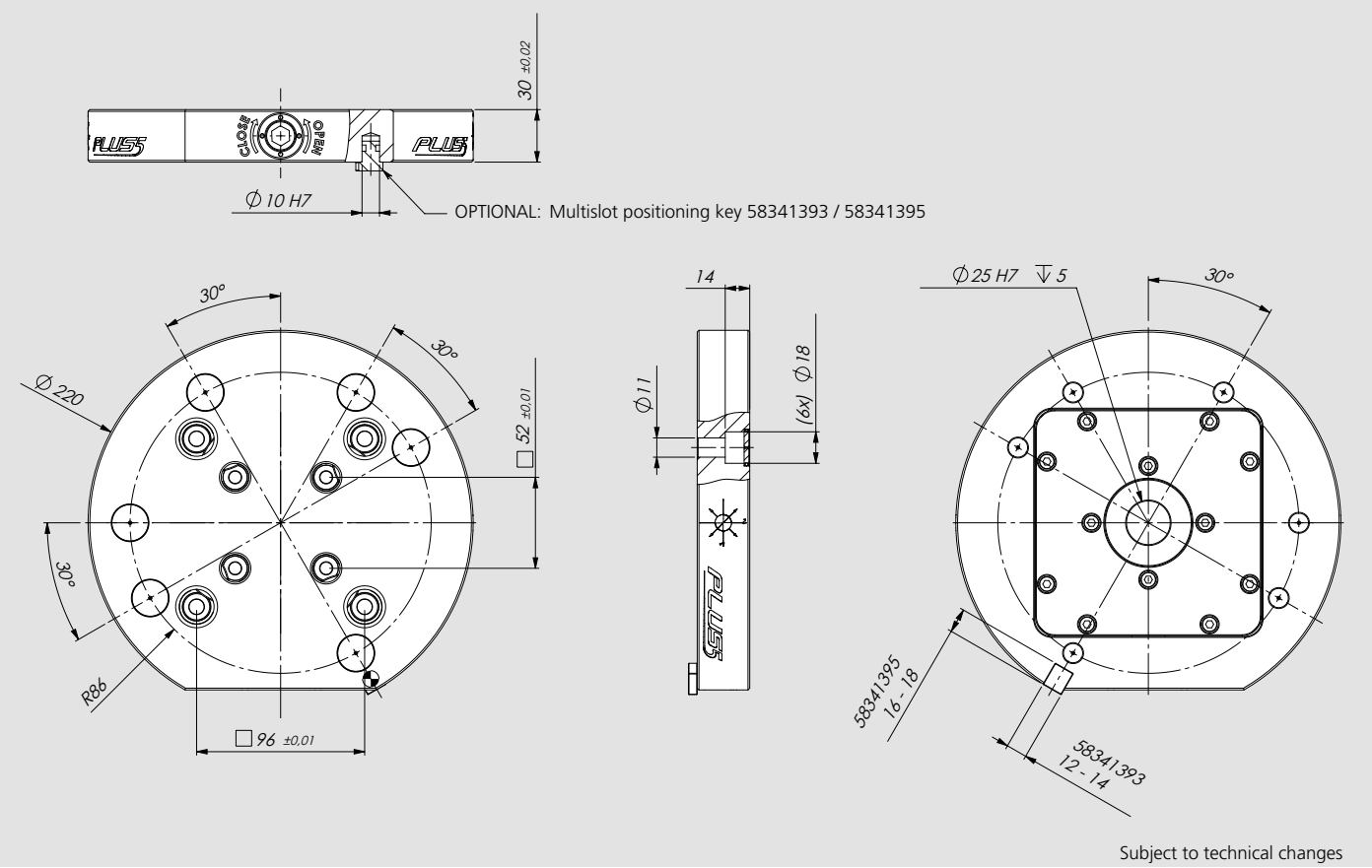

Subject to technical changes

Id. No.	Weight (Kg)
46240113	8

PLUS 5 - 52

TRUNNION FOR PLUS 5 - 52

Plus 5 - 52 not included

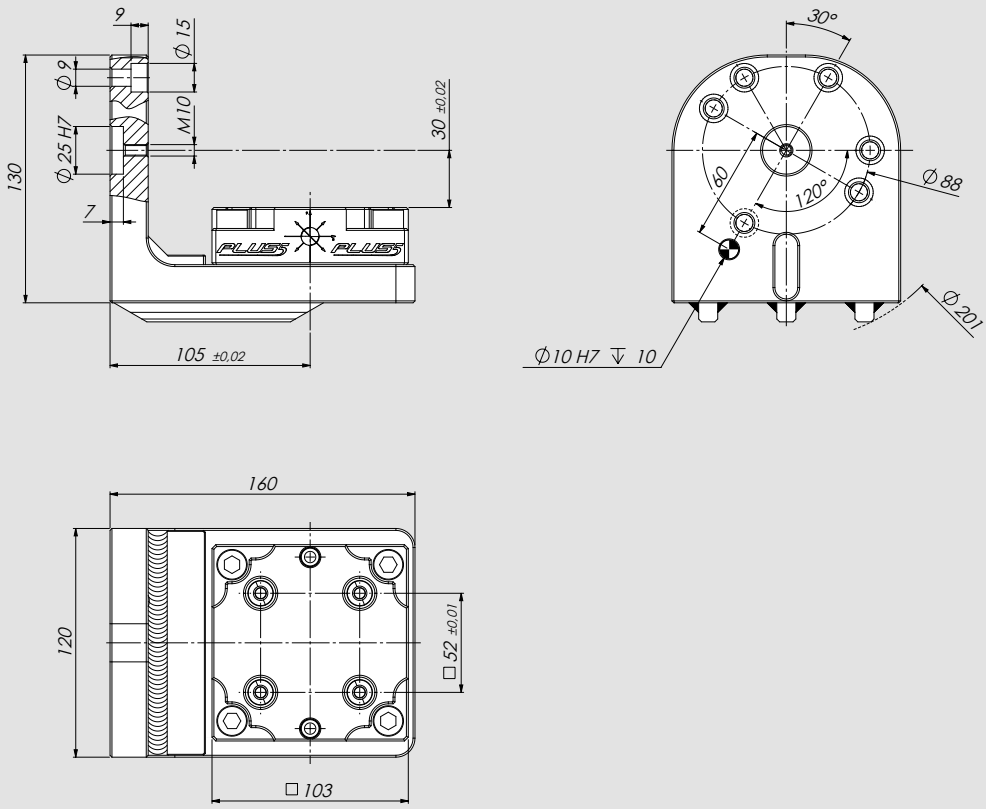

Subject to technical changes

Id. No.	Weight (Kg)
46242038	6

Application example

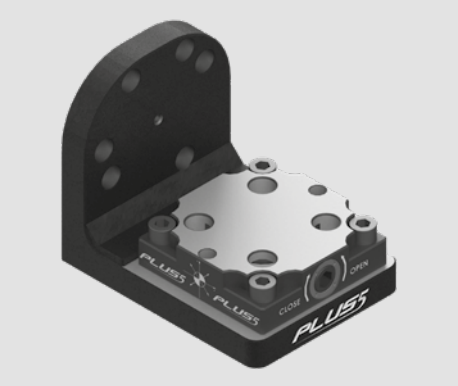

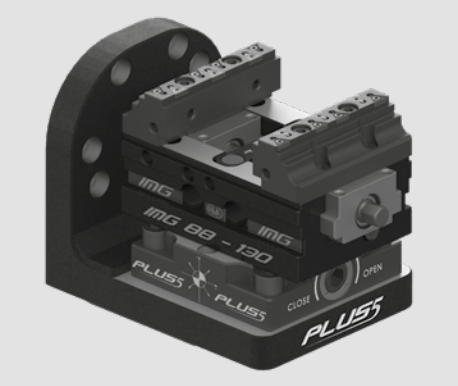

PLUS 5 - 96

Plus 5 - 96 not included

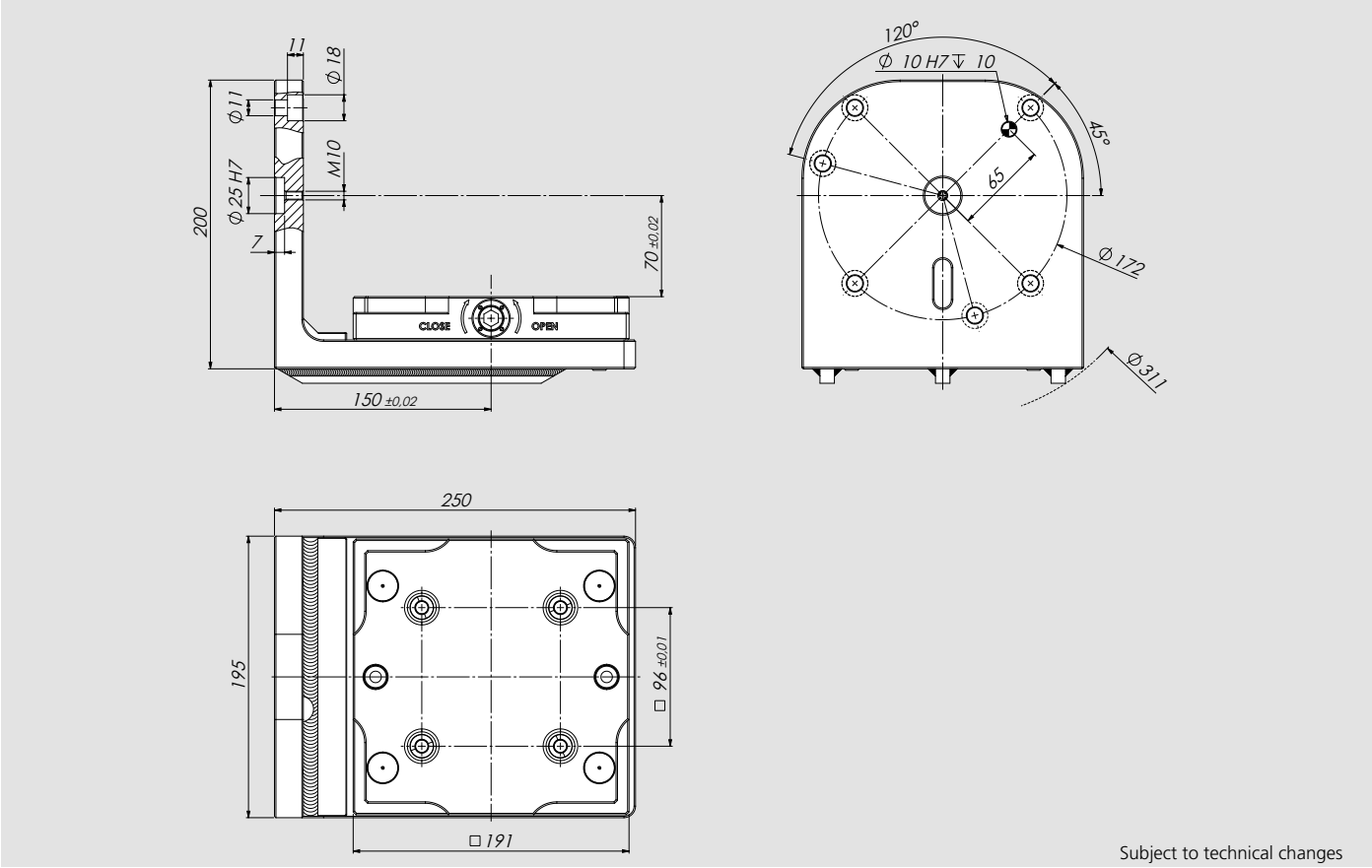

Subject to technical changes

Id. No.	Weight (Kg)
46242039	14

Application example

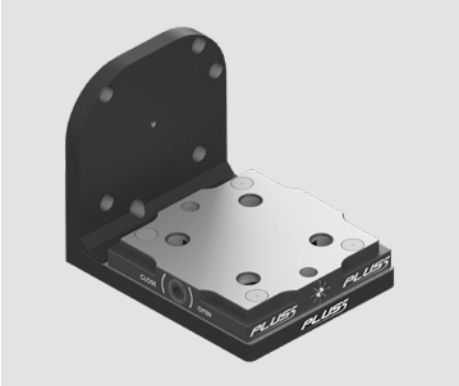

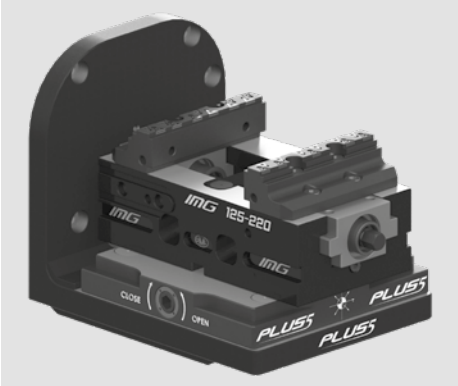

PLUS 5 - 96

MODULAR MULTIPLE TRUNNION FOR PLUS 5 - 96

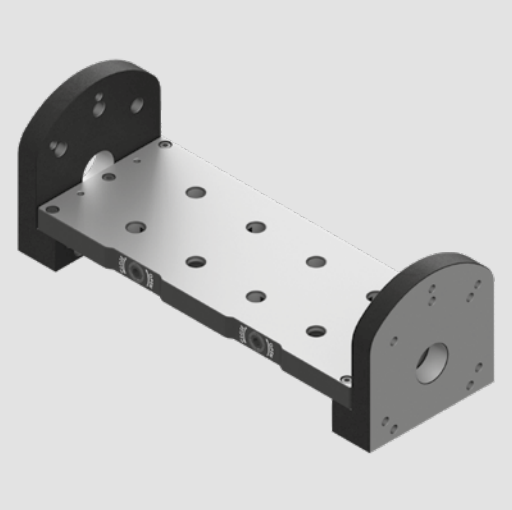

- Complete with:
  - wrench 10mm
  - n. 2 safety plates (Id. No. 46248215)
- Pins not included

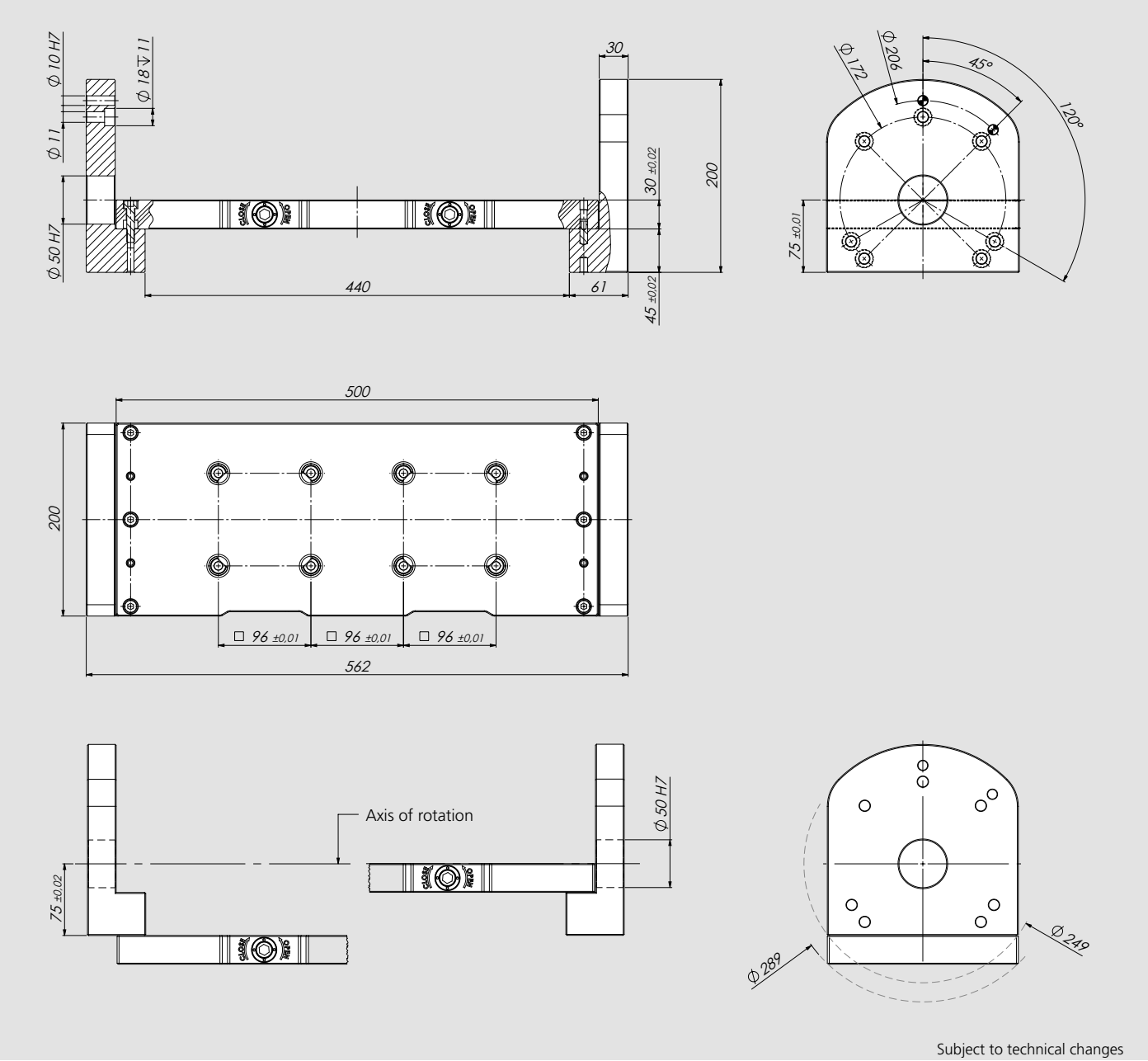

Subject to technical changes

Id. No.	Weight (Kg)
46248320	43

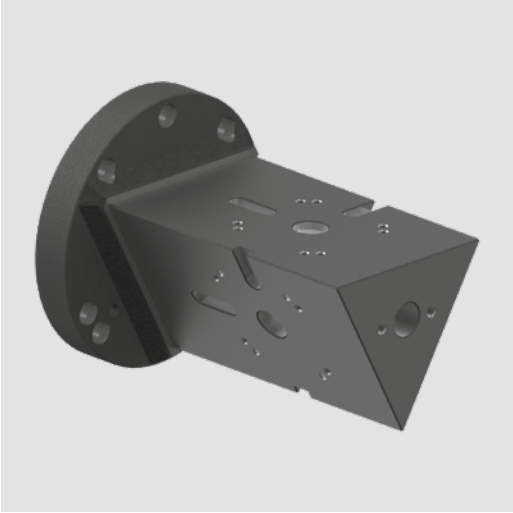

Vices not included

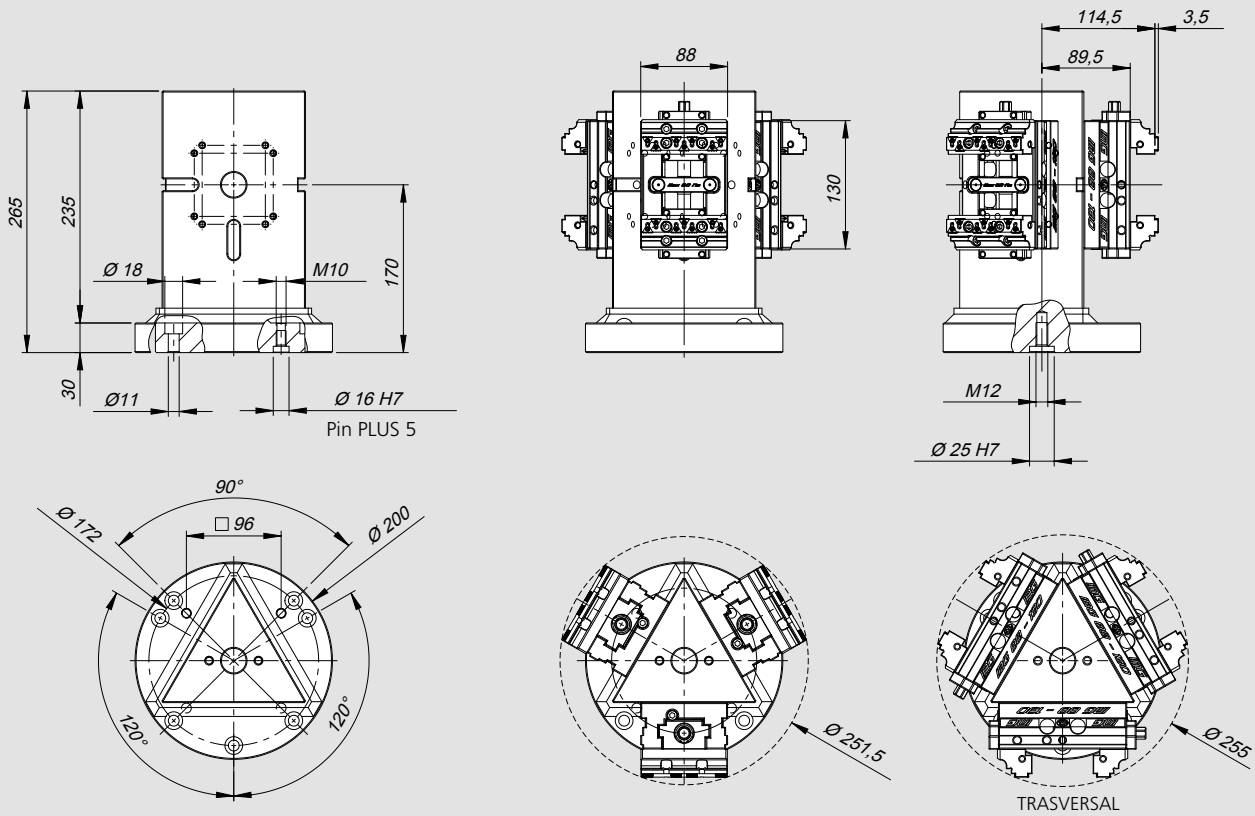

Subject to technical changes

Id. No.	Weight (Kg)
50191460	25

Application example

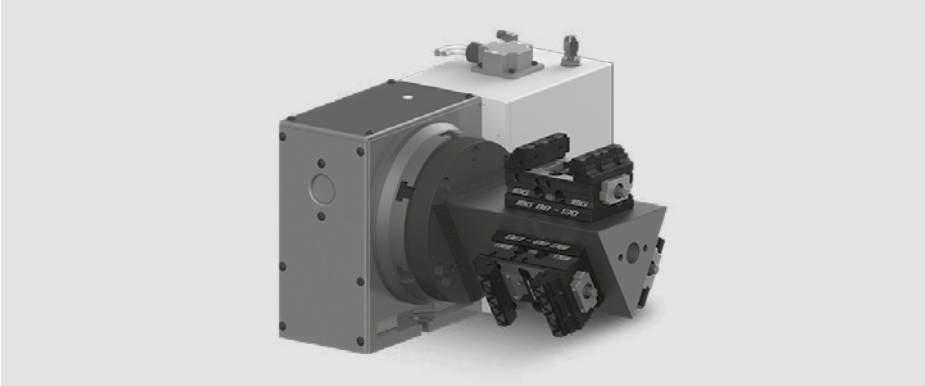

Y CHUCK

TRUNNION FOR Y CHUCK

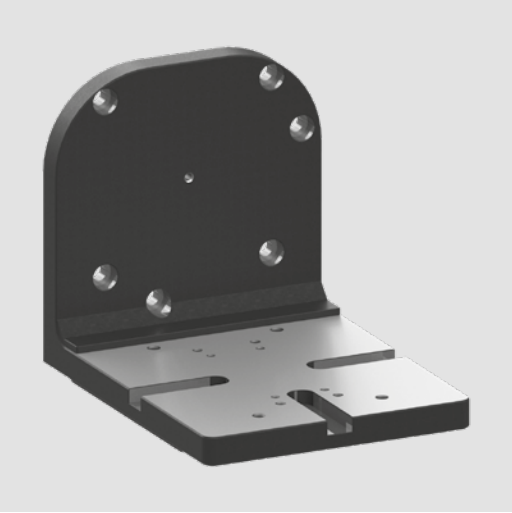

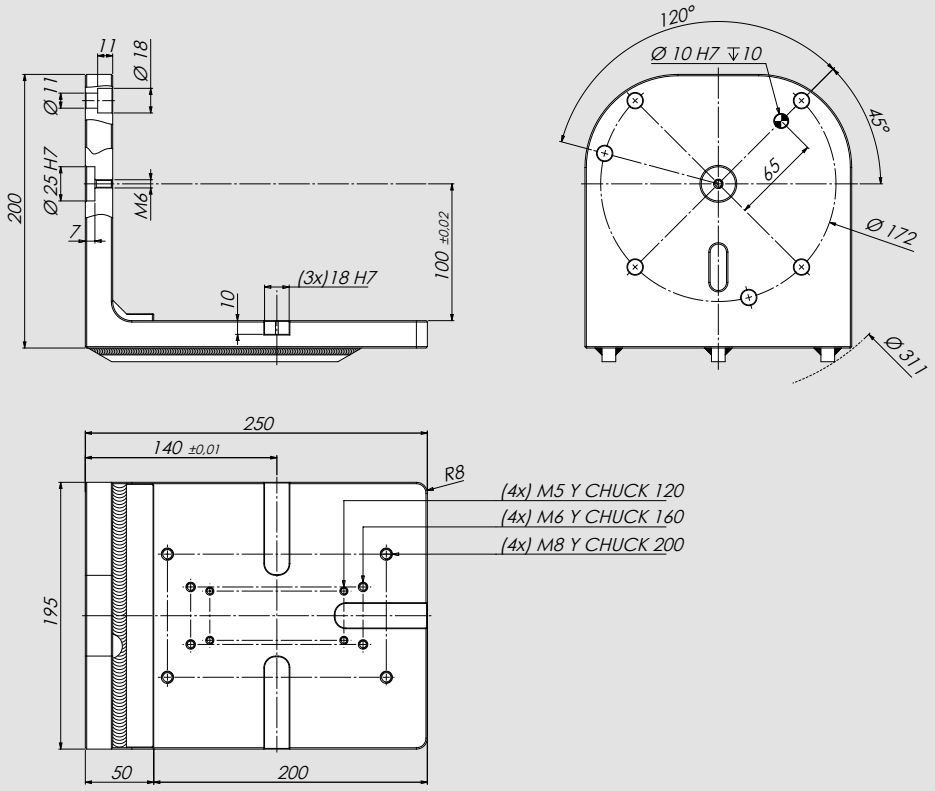

Subject to technical changes

Id. No.	Weight (Kg)
50191456	14

Application example

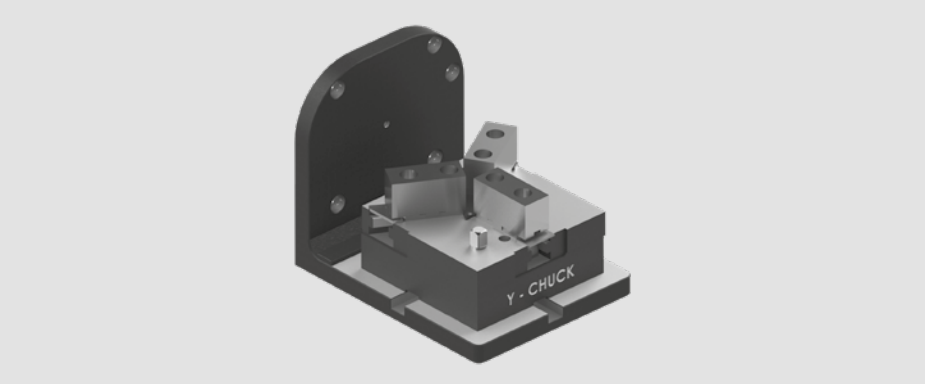

Y CHUCK

The YC static chuck features an innovative function that allows it to be transformed into an extremely compact and strong vise.

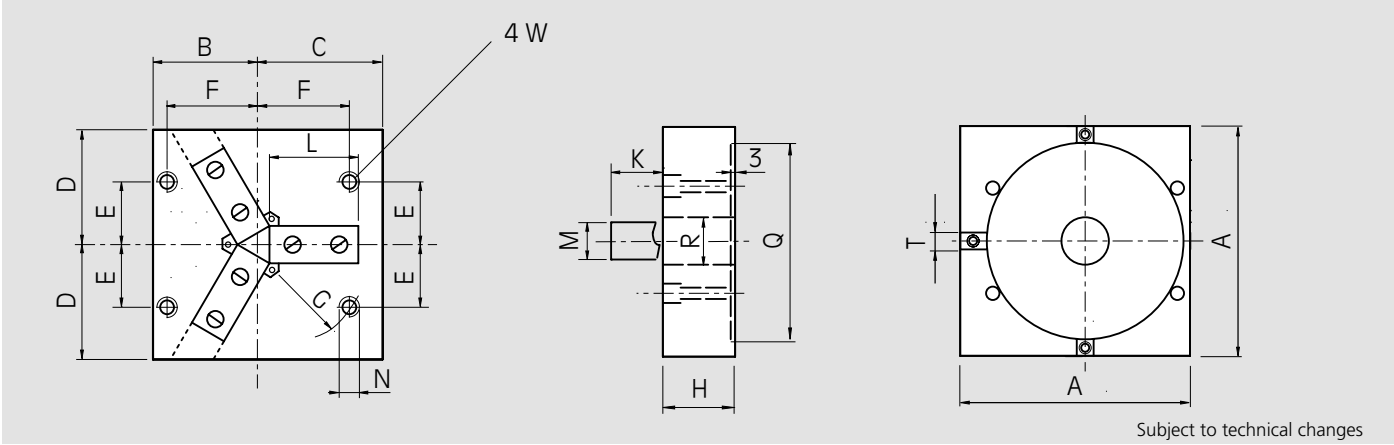

Subject to technical changes

Id. No.	Type	A mm	B mm	C mm	D mm	H mm	R mm	Q mm	N mm	G mm	T mm	E mm	F mm	W
51 99 13 33	Y - 120	120	55	65	60	43	Ø 25	--	10	55	12	18	49	M 5
51 99 13 34	Y - 160	160	70	90	80	65	Ø 34	Ø 119	12	73,5	18	21	63	M 6
51 99 13 35	Y - 200	200	90	110	100	65	Ø 44	Ø 170	12	99	18	45	80	M 8
51 99 13 36	Y - 300	300	140	160	150	65	Ø 104	Ø 270	12	147	18	80	120	M 10

Specification

Type	jaw stroke mm	input torque N-m	gripping force kN	gripping range mm	weight Kg
Y - 120	7	50	11	8 ~ 90	4,5
Y - 160	10	100	22	15 ~ 126	12
Y - 200	15	130	33	20 ~ 173	19
Y - 300	25	150	38	40 ~ 266	40

Soft-jaw dim.

Type	K mm	L mm	M mm	Id. No.
Y - 120	30	60	19	51991366
Y - 160	41	70	30	51991367
Y - 200	43	85	30	51991368
Y - 300	54	115	45	51991369

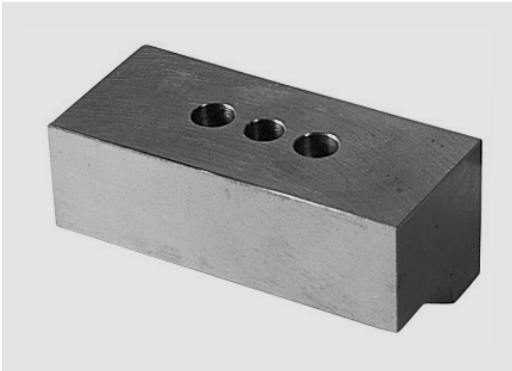

Fixed jaw

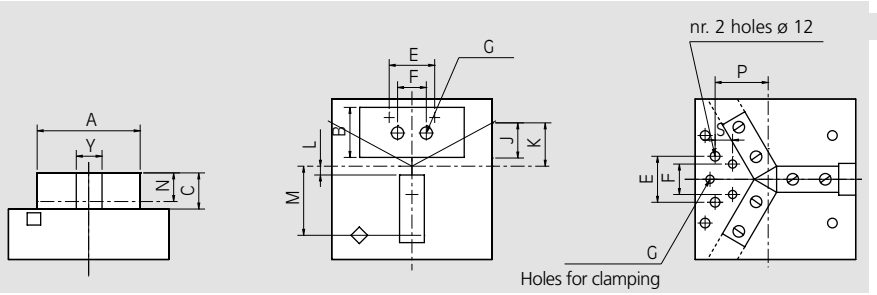

Id. No.	Type	A mm	B mm	C mm	E mm	F mm	G mm	N mm	Y mm	S mm	P mm	min J mm	max K mm	min L mm	max M mm
51 99 13 37	Y - 120	80	45	30	60	30	2-M6	16	18	10	45	12	45	6	55
51 99 13 38	Y - 160	100	45	41	70	30	2-M8	18	30	10	53	20	40	10	65
51 99 13 39	Y - 200	130	62	43	60	40	2-M10	20	30	20	65	15	50	10	70
51 99 13 40	Y - 300	160	115	54	60	120	3-M12	35	45	20	105	15	100	13	120

FLANGE

FLANGES FOR CHUCK

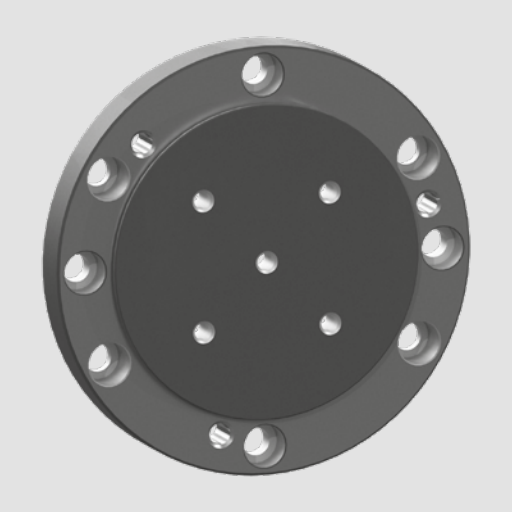

Chuck not included

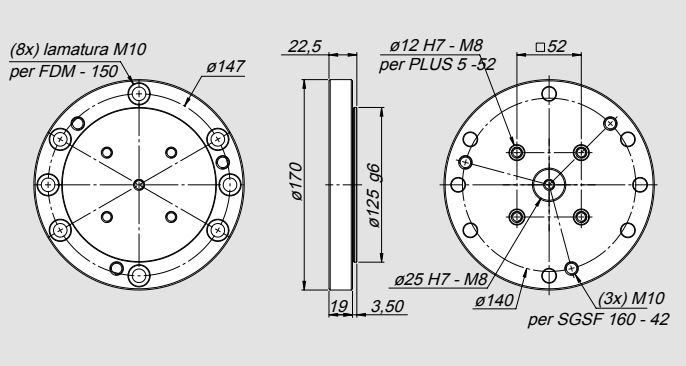

Id. No.	Weight (Kg)
51991341	3

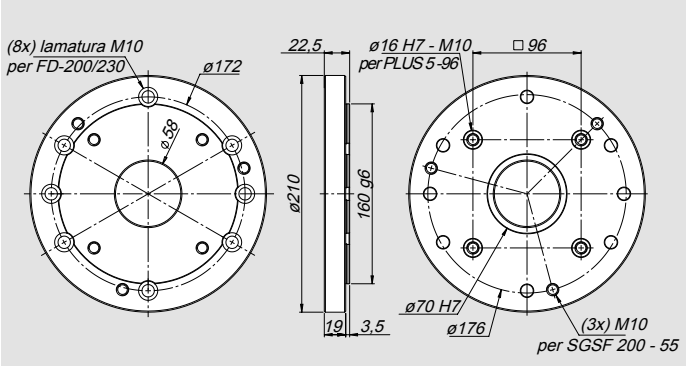

Id. No.	Weight (Kg)
51991342	5

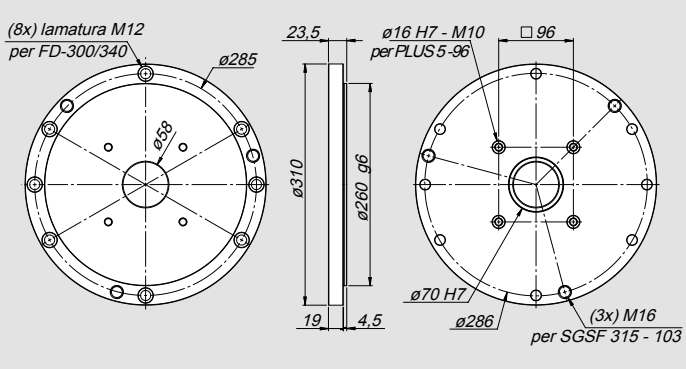

Id. No.	Weight (Kg)
51991343	13

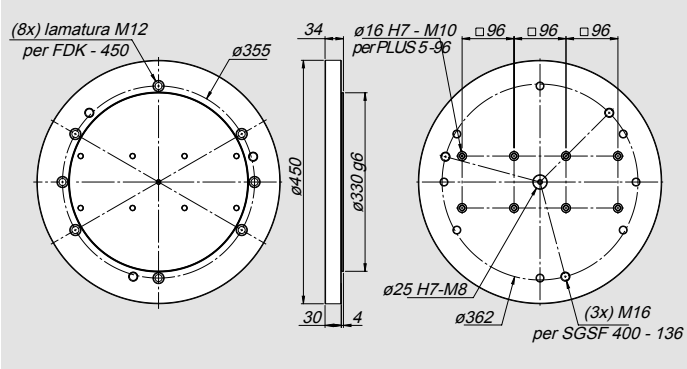

Id. No.	Weight (Kg)
51991347	39

Application example

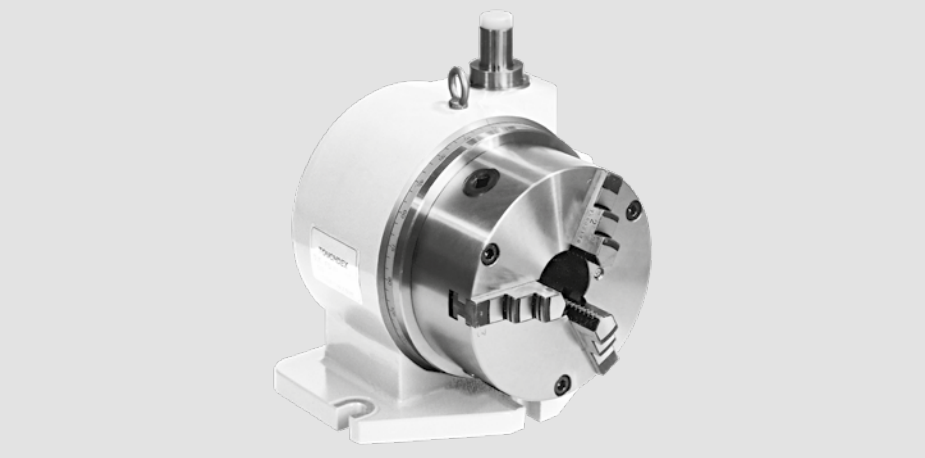

SGSF MANUAL CHUCK (frontal mounting)

SMW self-centering manual chuck, steel body

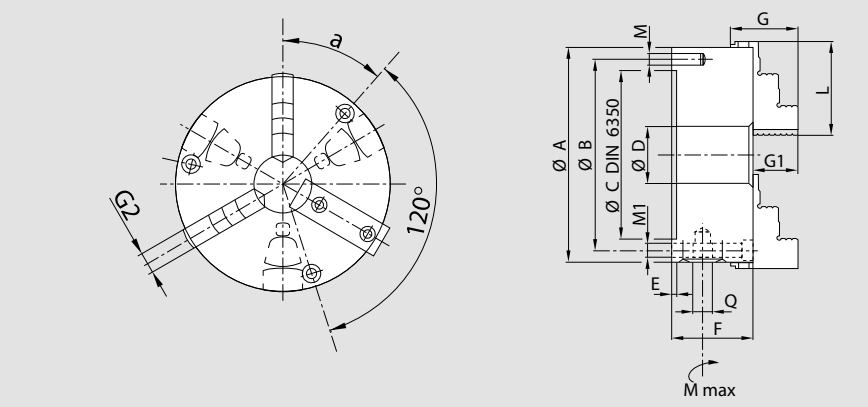

Id. No.		33031216	33031220	33031231	33031240
Chuck		SGSF 160-42	SGSF 200-55	SGSF 315-103	SGSF 400-136
Attachement DIN 6350	Dim	FL 125	FL 160	FL 260	FL 330
	A mm	160	200	315	400
	B mm	140	176	286	362
H6	C mm	125	160	260	330
	D mm	42	55	103	136
	E mm	4	4	5	5
	F mm	68	78	96,2	108
	G mm	53	54	73	92
	G1 mm	32	29	41	55
	G2 mm	20	25	32	36
	L mm	70	85	125	145
Front mounting	M1 mm	3xM10	3xM10	3xM16	3xM16
	Q mm	11	11	14	17
	a °	102°	42°	42°	45°
Max speed	rpm	4500	4000	2800	2000
Torque M max	Nm	120	160	200	280
Weight (w. jaws)	Kg	11,2	20	50	90
Moment of inertia	Kgm^2	0,03	0,10	0,60	1,80

Chuck		SGSF 160-42	SGSF 200-55	SGSF 315-103	SGSF 400-136
Suggested clamping diameters at max. clamping force					
Monoblock jaws	B mm	19-56	22-75	58-115	77-162
	G mm	64-101	78-130	129-199	169-254
	H mm	113-150	146-198	226-296	295-380
	C mm	57-94	68-121	128-184	149-234
	E mm	109-146	136-189	212-281	275-360
	Y mm	0	4	9	16
	M mm	18	22	25	26
Min. clamping diameters with clamping force reduced by 40%					
		3	4	10	10
No. of scroll teeth		2	3	5	5
No. of meshing scroll teets for safety clamping		2	3	5	5

- For max. speed and max. clamping, all teeth shall be meshing
- For meshing teeth control towards outside dimension (M) toward inside dimension (Y)
- For features exceeding these limits ±16 mm on diameter, shall be reduced by 25%
- ATTENTION: CLAMPING DIAMETERS HAVE BEEN CALCULATED WITH A.M. MESHING TEETH

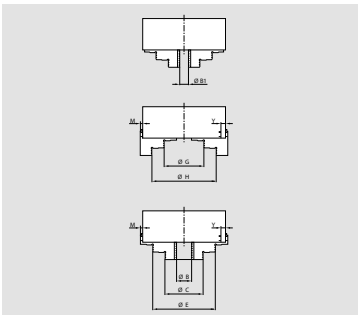

Chuck		SGSF 160-42	SGSF 200-55	SGSF 315-103	SGSF 400-136
Accessories		Id. No.			
Set-3 GRC		03651630	03652030	03653130	03654030
Set-3 Soft blocks		03601630	03602030	03603130	03604030
Set-3 Monoblock jaws Dx		03551630	03552030	03553130	03554030
Set-3 Monoblock jaws Sx		03561630	03562030	03563130	03564030
Set-3 Reversible jaws		03631630	03632030	03633130	03634030
Key		02711700		02713100	02714000

CIVI-CN

CIVI 2000 COLUMN

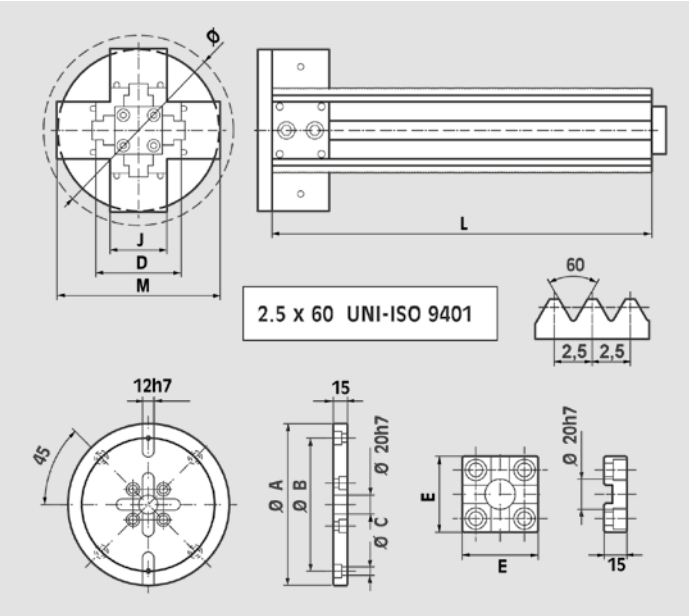

Application example

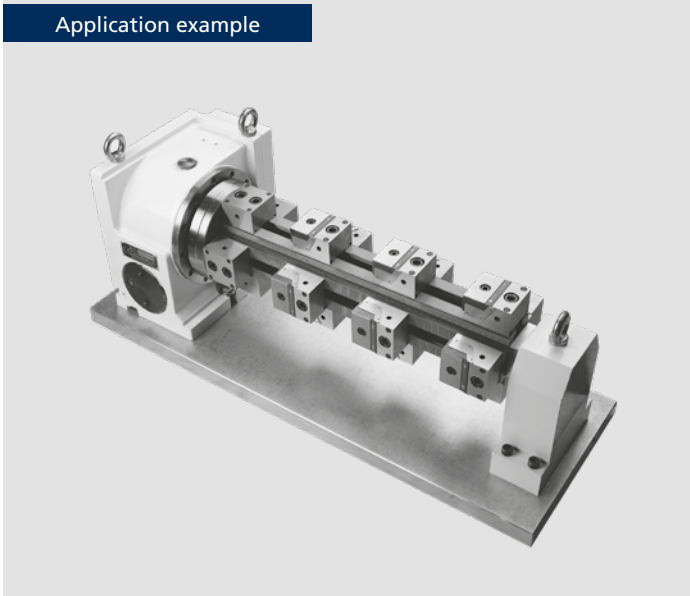

Type	Id.No.	J mm	D mm	M mm	L mm	Ø rot. mm	Ø A mm	Ø B mm	Ø C mm	E mm	Weight Kg
CV-CN 60-400	77584111				400						19
CV-CN 60-500	77584112	60	90	170	500	200	170	140	9	50	23
CV-CN 60-630	77584113				630						29
CV-CN 90-400	77584211				400						34
CV-CN 90-500	77584212	90	115	205	500	230	210	180	11	70	41
CV-CN 90-630	77584213				630						50

Clamping capacity

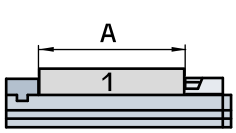

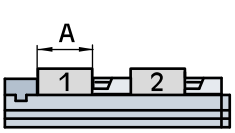

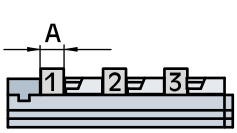

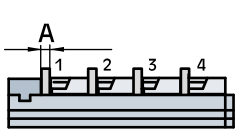

	A max. mm			
CIVI 2000 38/60-250	120	25	-	-
CIVI 2000 38/60-400	270	100	43	15
CIVI 2000 38/60-500	370	150	76	40
CIVI 2000 38/60-630	500	215	120	73
CIVI 2000 90-250	99	-	-	-
CIVI 2000 90-400	249	84	29	-
CIVI 2000 90-500	349	134	62	26
CIVI 2000 90-630	479	199	106	59

Movable smooth jaw set J38

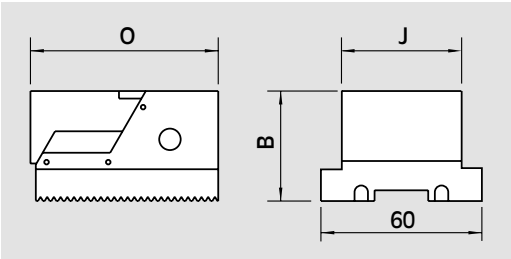

Type	Id. No.	B mm	J mm	O mm	Weight kg
CV 38	77584063 *	40	38	70	1

Movable smooth jaw set J60-J90

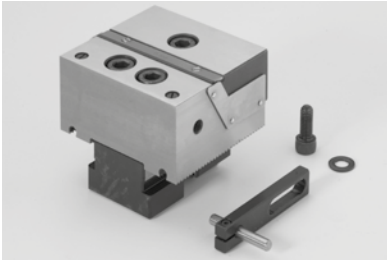

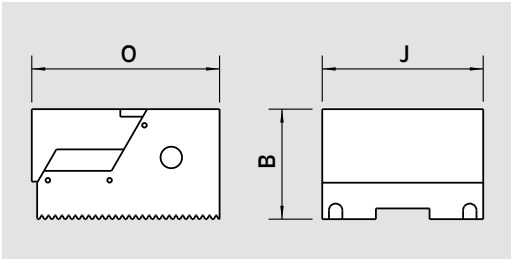

Type	Id. No.	B mm	J mm	O mm	Weight kg
CV 60	77584163 *	40	60	70	1.4
CV 90	77584263 *	45	90	80	2.9

Movable jaw set J38 with grooved jaws (for raw workpieces)

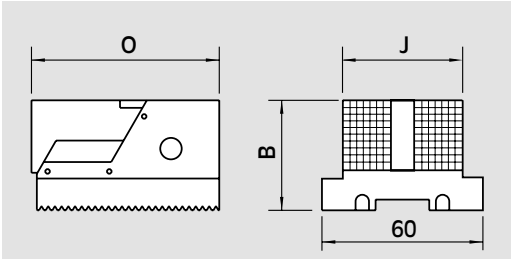

Type	Id. No.	B mm	J mm	O mm	Weight kg
CV 38	77584068 *	40	38	70	1

Movable jaw set J60-J90 with grooved jaws (for raw workpieces)

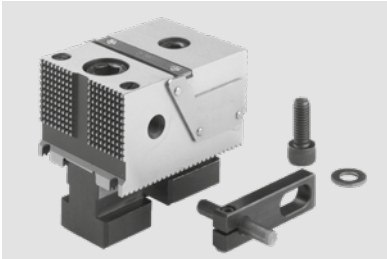

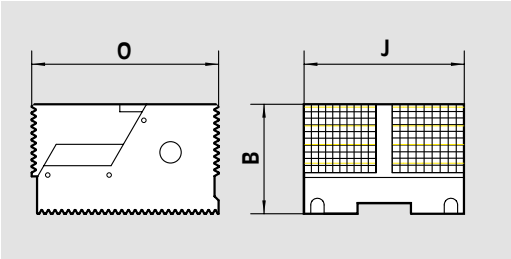

Type	Id. No.	B mm	J mm	O mm	Weight kg
CV 60	77584168 *	40	60	70	1.4
CV 90	77584268 *	45	90	80	2.9

* Codes valid only for mounting on CIVI column

Movable set with double jaws

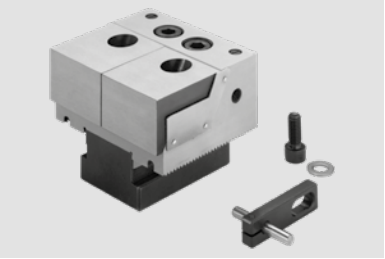

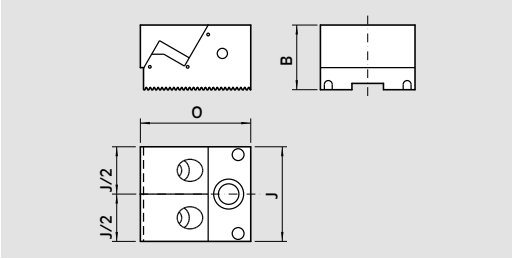

Application example

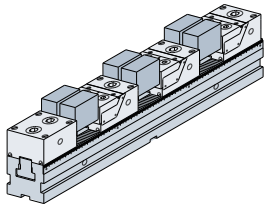

Type	Id. No.	B mm	J mm	O mm	Weight kg
CV 60	77584164 *	40	60	70	1.5
CV 90	77584264 *	45	90	80	3

Movable jaw set with aluminium jaws

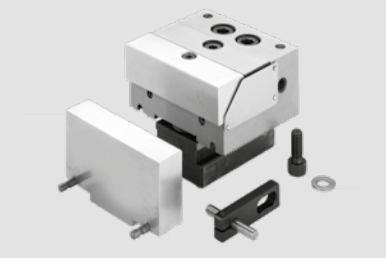

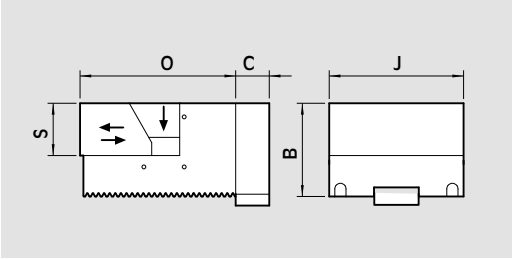

Type	Id. No.	B mm	C mm	J mm	O mm	S mm	Weight kg
CV 60	77584165 *	40	15	60	69.5	23	1.2
CV 90	77584265 *	45	20	90	80	25	2.7

Movable jaw set with steel soft jaws

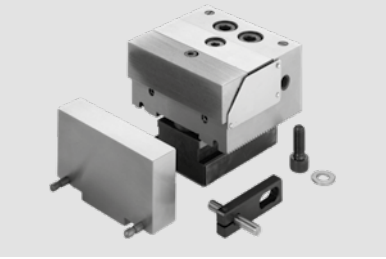

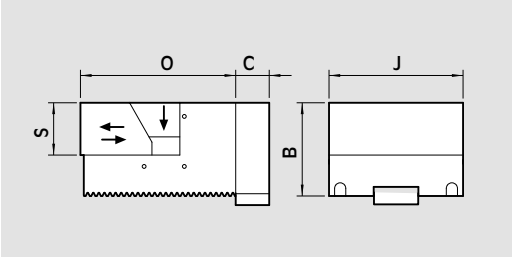

Type	Id. No.	B mm	C mm	J mm	O mm	S mm	Weight kg
CV 60	77584166 *	40	15	60	69.5	23	1.4
CV 90	77584266 *	45	20	90	80	25	3

Movable jaw set with steel hardened jaw

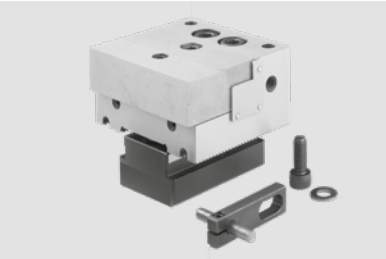

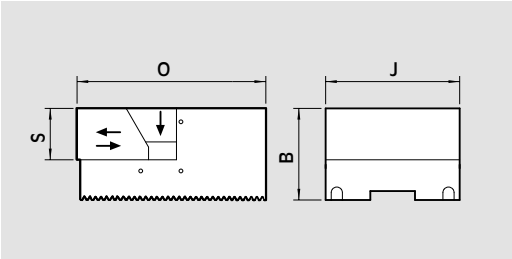

Type	Id. No.	B mm	J mm	O mm	S mm	Weight kg
CV 60	77584167 *	40	60	69.5	23	1.4
CV 90	77584267 *	45	90	80	25	3

* Codes valid only for mounting on CIVI column

COLLECT CHUCK ER50

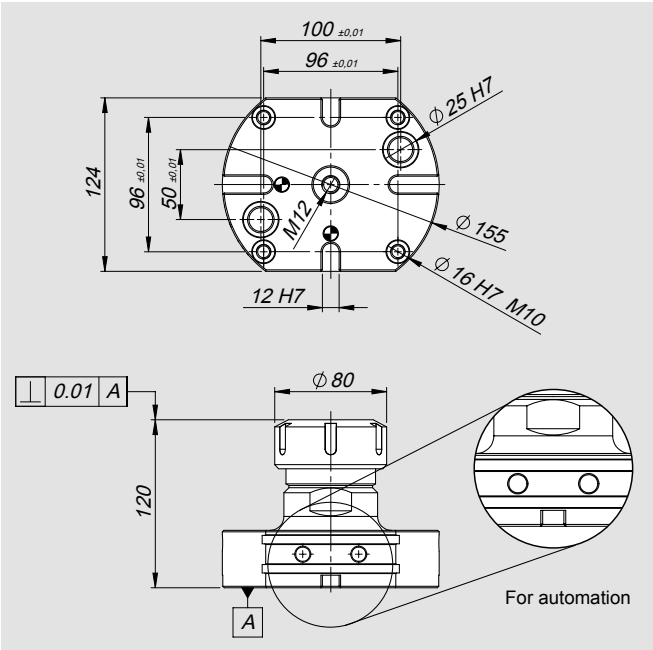

Id. No.
46233500

Application example

EN

General Catalogue **A6** EN - Code 10706130 - **Published November 2025**

A COMPANY OF THE GROUP

OFFICINA MECCANICA LOMBARDA S.r.l.

Viale dell'Industria 6 - 27020 Trivolzio (PV) ITALY
Tel. +39 0382 93 00 00

E-mail ➤ omlspa@omlspa.it

www.omlspa.it