QUANTUM SAILS
OWNER'S GUIDE

CARING FOR YOUR CRUISING SAILS



THANK YOU FOR CHOOSING QUANTUM SAILS FOR YOUR NEW CRUISING SAILS. WE ARE DEDICATED TO PROVIDING YOU WITH THE HIGHEST LEVEL OF SUPPORT AND SERVICE FOR AS LONG AS YOU OWN YOUR YACHT. OUR SAIL CONSULTANTS AND SERVICE TECHNICIANS AT MORE THAN 60 LOCATIONS AROUND THE WORLD ARE WITH YOU EVERY STEP OF THE WAY AS ADVISORS, FRIENDS, AND FELLOW SAILORS. THE QUANTUM WEBSITE IS ALSO A GREAT SOURCE OF HOW-TO INFORMATION THAT WILL HELP YOU GET THE BEST PERFORMANCE FROM YOUR BOAT AND SAILS.

Your sails are an investment and with proper care you can expect years of satisfaction and enjoyment. This guide was prepared with that in mind. In the following pages, you'll find sail care advice, recommendations for annual sail maintenance, advice about sail washing, and other useful tips.

Here at Quantum, we are dedicated to providing sailing solutions, not just sails. We want to be your go-to resource and partner for all your sailing needs. If there's anything we can do to help improve your sailing experience, please don't hesitate to contact your local Quantum representative or our customer service team at 888.773.4889.

QUANTUM SAILS℠
TO THE NEXT CHALLENGE.



TABLE OF CONTENTS

4 Maintaining the Condition of Your Sails

5 Sail Care Tips

6 Maintenance Guidelines

12 Annual Service Checklists

14 Restoring Sail Performance with Precision Recuts

16 Sail Cleaning

17 UV Damage & Prevention

18 Frequently Asked Questions

MAINTAINING THE CONDITION OF YOUR SAILS

Just like your boat and car, regular maintenance of your sails will extend their lifespan. This applies to every sail regardless of style, material, or construction technique. On the following pages, you'll find maintenance recommendations for headsails, mainsails, and spinnakers with detailed information on what to look for and how to address common issues. The Annual Service Checklists on page 12 provide similar information in a quick-read format for easy reference.

Throughout this guide, we use "seasons" as a measure of time, but a season varies greatly based on multiple factors, most notably usage and amount of sun exposure. These variables are covered in more detail on page 17. Keep in mind the maintenance timeline is not absolute: Individual use characteristics and environmental conditions greatly affect these recommendations. Of course, accidents, misuse, and even regular use can cause wear and tear or damage to your sails requiring repair at any time. For this reason, it's important to frequently spot-check your sails for signs of wear. Small problems addressed early can prevent bigger and more costly problems later. For purposes of the maintenance guidelines in this manual, we estimate a season as four to six months of moderate sailing a few times a week under moderate conditions. Sailing more often, in harsh conditions, or for longer periods each year will lead to an accelerated maintenance schedule. No matter what, your Quantum service team is ready to assist.

> ***OUR NUMBER-ONE SAIL CARE TIP IS TO PROTECT SAILS FROM UNNECESSARY EXPOSURE TO SUNLIGHT WHEN NOT UNDER SAIL. USE SACRIFICIAL UV COVERS ON FURLING HEADSAILS & COVER MAINSAILS WHEN NOT IN USE.***



SAIL CARE TIPS

YOUR SAILS ARE AN INVESTMENT AND WITH PROPER CARE YOU CAN EXPECT YEARS OF SATISFACTION AND ENJOYMENT. FOLLOWING THESE SAIL CARE TIPS FROM OUR SAILMAKERS WILL HELP EXTEND THE LIFE OF YOUR SAILS.

- All sail fabrics are weakened by UV light. Protect sails from unnecessary exposure to sunlight when not under sail.
- Avoid prolonged luffing and flogging. Motor with your sails down, unless the sails can be filled.
- Protect sails from chafe. Seams and batten pockets are especially vulnerable. Apply adhesive Dacron® (or suitable alternative) anywhere broken stitching or wear indicates repeated contact between sail and rigging. If you don't have them already, consider adding spreader and/or stanchion patches where they come into contact with the sail.
- Be sure spreader tips, cotter keys, etc., are all well taped.
- Carry adhesive-backed Dacron sail tape for emergency repairs, and follow-up promptly with a permanent repair through your Quantum representative.
- Replace broken or missing battens immediately. Carry spares.
- Use specialized sails in their designed wind range. If you have a question on wind range consult with any Quantum loft.
- Never back a genoa against a spreader.
- Avoid over-tensioning the halyard (too much tension creates a gutter or trough along the leading edge of the sail). Remember to ease the halyard when the apparent wind velocity drops. For roller furling racing headsails, it's a good idea to ease the halyard tension slightly when storing the sail furled for extended periods of time.
- Be sure that roller-furling sails are well secured when leaving the boat. Cleat the furling line, take an extra turn of the sheets around the sail, and secure both sheets.
- Periodically rinse sails with fresh water.
- When washing your own sails, avoid harsh detergents, solvents, and strong chemicals. Only use products with a neutral pH. Do not scrub sails with a stiff brush or anything abrasive.
- Mildew is unsightly and can damage your sails. Prevention is the best approach. After making sure your sails are completely dry, store them in a cool, dry place. If you do end up with mildew, start by consulting your sailmaker. They can recommend a cleaning solution suitable for your sail material.
- Avoid sail cleaning offers that say they will put the "sizing" back into your sail. This is a temporary stiffening and is often accompanied by aggressive cleaning methods that can shorten sail life. The stabilizing finish on new sails is only achievable under controlled heat and pressure to the fabric before the material is cut and formed into a sail.
- Store sails dry. Flake woven sails, roll membrane sails, and flake/brick spinnakers. Visit Quantumsails.com for video guides for folding sails.
- For off-season storage, be aware that mice can do serious damage. Lessen the chance of rodents getting into the sail bag by suspending it from a rafter, overhead hook, or place a few mothballs inside a mesh bag and place inside the sail bag. If in doubt about the condition of your storage location, ask your local loft about available storage.

MAINSAIL

- **A** BATTEN POCKET
- **B** BATTEN TENSIONING SYSTEM
- **C** CORNER PATCH
- **D** CORNER WEBBINGS
- **E** CUNNINGHAM
- **F** FOOT LINE
- **G** HEADBOARD
- **H** LEECH LINE
- **I** LUFF TAPE
- **J** LUFF SLIDE
- **K** REEF PATCH
- **L** REEF TIE-DOWNS
- **M** DRAFT STRIPES

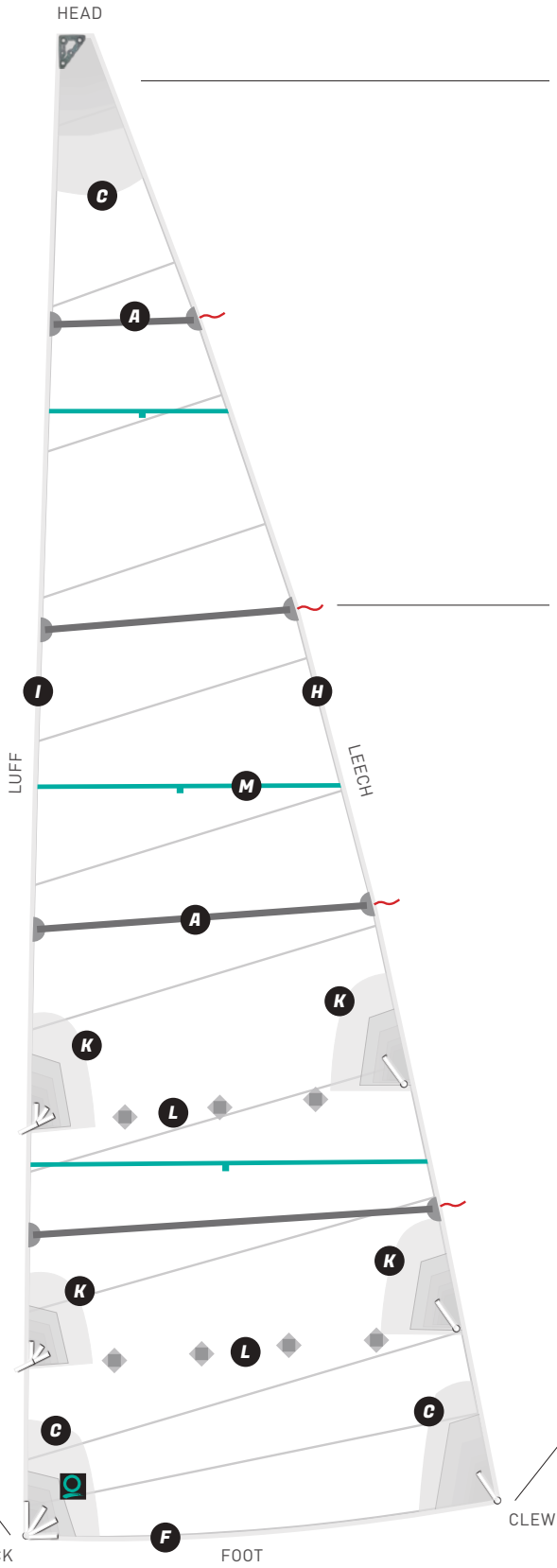

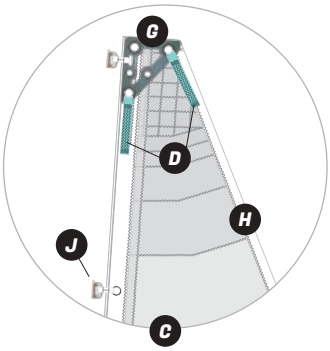

HEAD CORNER PATCH

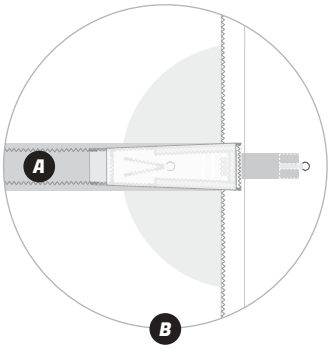

BATTEN TENSIONING SYSTEM

This type of batten tensioner is common to many sails; however, your sail may be equipped with a different type.

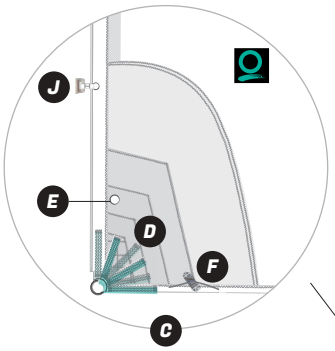

TACK CORNER PATCH

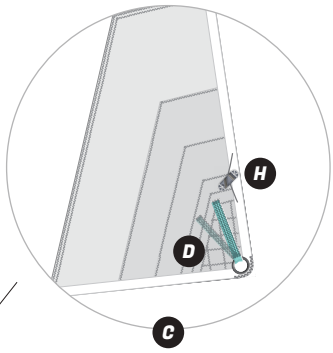

CLEW CORNER PATCH

SEASON ONE

1.1 Look for chafe marks on batten pockets (***A***) from standing rigging and extending from the luff caused by spreaders. Install chafe strips and patches to prevent costly service repairs to the sail.

1.2 If using a bolt rope luff rather than slides, check the alignment of the head slug to ensure that it is taking the sheet load, pulling away from mast before the top of the bolt rope does.

1.3 Boom furling mainsails – check inboard ends of all batten pockets for chafe and fraying. So much depends upon proper halyard tension when furling the sail, and these areas are the first to indicate wear due to improper tension.

1.4 Mast furling mainsails – check inner edge of clew UV cover for UV damage or excess dirt that would indicate sail isn't being furled fully into mast. In either case, we can provide a solution that will maintain the life of the sail.

1.5 Obtain and evaluate photos of sail in flying position for purposes of precision recuts later in the sail's life. These initial photos provide a baseline flying shape that can be referenced against future year's photos (see page 14 for photo tips).

SEASON TWO

2.1 All of the items from Season One.

2.2 Check luff and foot mast/boom attachment systems:

2.2a Luff slides (***K***) – check hand stitching for chafe/fraying that could indicate improper halyard tension or rough spots on mast/boom.

2.2b Bolt ropes – check at head/batten pocket/tack for chafe. Excess chafe could indicate incorrect offsets.

2.2c Luff/foot attachments that utilize grommets pressed into the sail – check for crow's feet stretch marks/wrinkles originating at the grommet and proceeding into body of sail. This indicates inadequate halyard/outhaul tension and possible offset problems.

2.3 Check batten pockets (***A***) for wear. Ensure inboard end reinforcements for batten pockets are robust and that batten tensioning devices are functioning correctly, including elastic webbing.

2.4 Check battens for cracking/splintering that could indicate issues with batten tension or batten specifications.

2.5 Wash sails (see discussion on page 16).

SEASON THREE

3.1 All of the items from Seasons One and Two. Although, you only need to wash the sail every other season unless needed.

3.2 Closely examine leech (***H***) of sail for indications of excess dirt or UV damage. If damage/dirt is limited specifically to this area of the sail, it's an indication that the sail is not being adequately covered on a regular basis by the sail cover/stack pack.

SEASON FOUR AND ONWARD

4.1 All of the items from Season One, Two, and Three.

4.2 Obtain and evaluate photos of sail in flying position to evaluate sail shape (see Precision Recuts discussion and tips on page 14).

4.3 Wash sails in season four and then subsequently every other season (see discussion on page 16).

HEADSAIL

- **A** CORNER PATCH
- **B** CORNER WEBBINGS
- **C** EXTRUSION JOINT
- **D** LEECH LINE
- **E** LEECH TAPE
- **F** LUFF TAPE
- **G** UV COVER (*FURLING HEADSAILS)
- **H** BOLT ROPE (*FURLING HEADSAILS)
- **I** HANK (**HANK-ON HEADSAILS)
- **J** DRAFT STRIPES

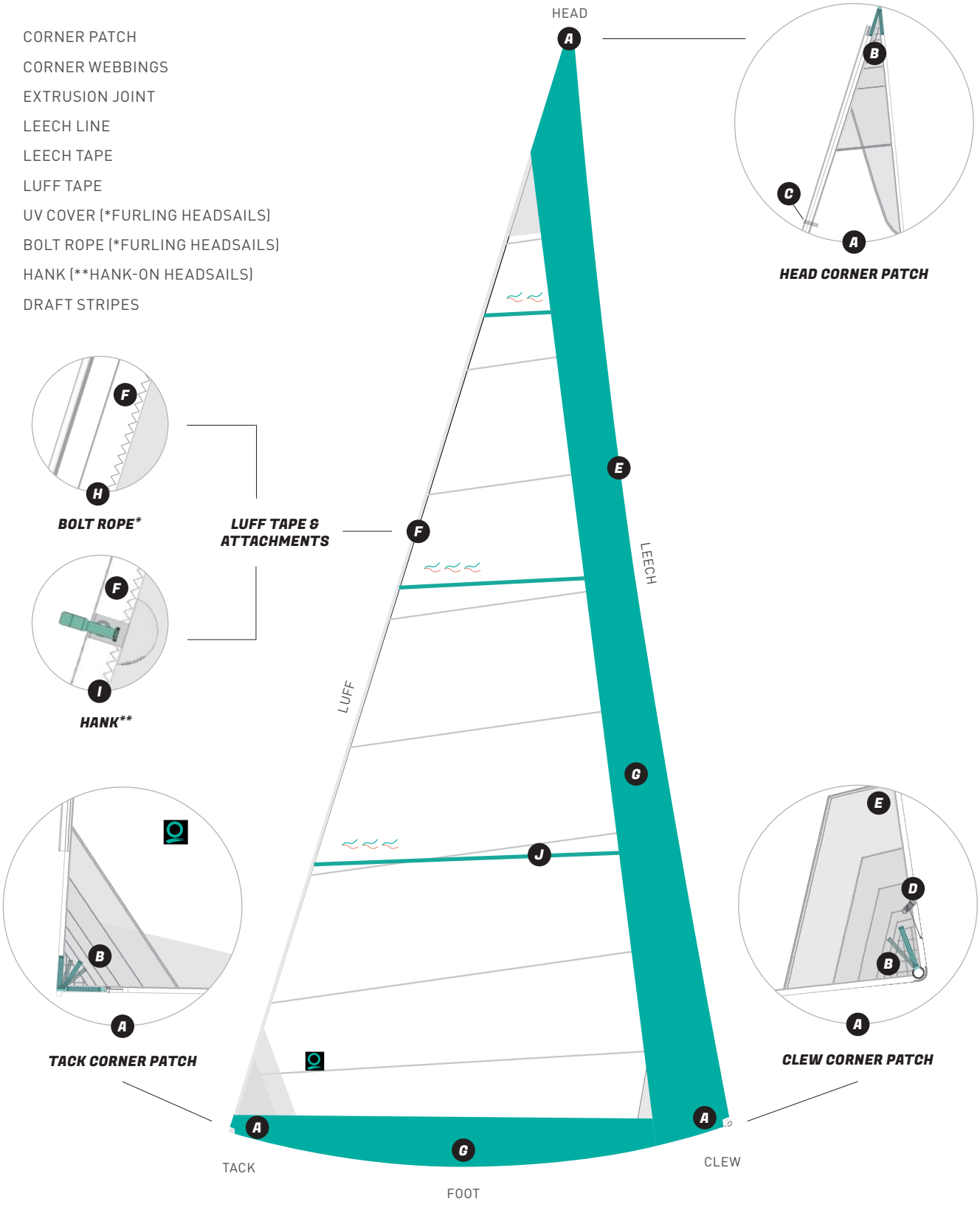

SEASON ONE

1.1 Check for spreader/mast/stanchion wear on leech, foot, and UV cover (***G***). If you don't have them already, add spreader/chafe patches where you see wear marks, which could be from interaction with the steaming light on the mast and the leech of the sail or the pulpit or stanchions across the foot.

1.2 On roller furling staysails, check for friction burns on the lower leech UV cover (***G***) caused by genoa sheets dragging on the rolled-up staysail when tacking. If needed, add an extra sacrificial layer here.

1.3 Check batten pockets and battens for wear. Ensure inboard end reinforcements for batten pockets are robust and that batten tensioning devices are functioning correctly, including elastic webbing.

1.4 Obtain and evaluate photos of sail in flying position for purposes of precision recuts later in the sail's life. These initial photos provide a baseline flying shape that can be referenced when reviewing future photos (see page 14 for photo tips).

SEASON TWO

2.1 All of the items from Season One.

2.2 Check luff tape (***F***) and attachments.

2.2a Furling headsails - Check bolt rope (***H***) and luff tape (***F***) for chafe and tears at the ends, extrusion joints (***C***), and where luff tape exits the feeder. Tears at the feeder could indicate incorrect tack setback. Tears at the extrusion joints indicates the rig should be ascended and forestay inspected.

2.2b Hank-on headsails - Check hanks (***I***) for binding due to misalignment and corrosion. Specifically, look for wear along inside of top few hanks, as they travel the farthest and indicate wear related to both use and lack of halyard tension.

2.3 Check foot tape from tack to mid-foot. This area can become chafed from contact with lifelines. A sacrificial foot tape in this area over the UV cover will take the wear and is easily replaced.

2.4 Check 'inside' of sail for UV damage – excessive UV damage could indicate sail is being furled backwards. Catching it at this point can literally save the sail.

2.5 Wash sails (see discussion on page 16).

SEASON THREE

3.1 All of the items from Seasons One and Two. Although, you only need to wash the sail every other season unless needed.

3.2 Potentially re-stitch all exposed stitching on UV covers due to thread degradation from UV exposure. Continue to check annually from here on out.

3.3 Check corner webbings (***B***) for dehydration, suppleness, and fraying. Depending on use and UV exposure, webbings can be replaced as soon as third season or as late as tenth season.

3.4 Check stitching on yacht canvas, including sail covers, dodgers, biminis, etc. They all age at the same rate! Proactively re-stitching yacht canvas prevents more costly repairs and reconstruction invoices later.

SEASON FOUR AND ONWARD

4.1 All of the items from Season One, Two, and Three.

4.2 Check integrity of UV cover (***G***). For lighter and less durable materials such as UV Dacron, it would not be abnormal to replace the UV cover at this point. For heavier, more durable covers such as Sunbrella®, we would expect them to maintain protection of the sail through these years – but again, a lot depends upon use. Excessive flogging can dramatically reduce the life of any UV cover. You run the risk of damaging the body of the sail if you fail to replace the UV cover when needed.

4.3 Check the integrity of the head/tack/clew (***A***). These areas suffer due to chafe during furling as well as the clew's interaction with the rig. Re-stitching and suitable patching will prevent catastrophic failure during use.

4.4 Obtain and evaluate photos of sail in flying position to evaluate sail shape (see Precision Recuts and tips on page 14).

4.5 Wash sails in season four and then subsequently every other season (see discussion on page 16).

SPINNAKER

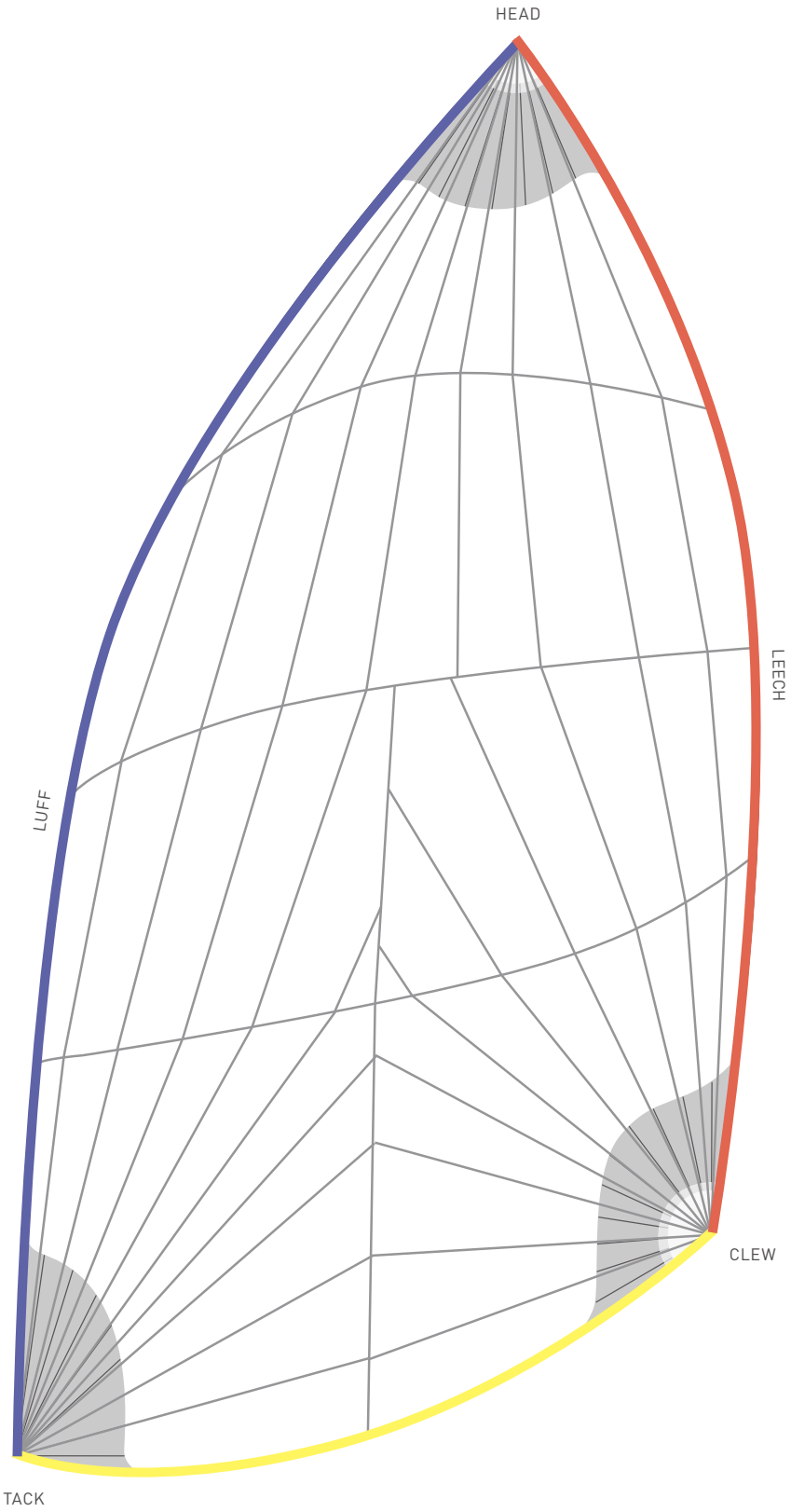



SEASON ONE AND ONWARD

1.1 Check each sail panel, seam, and corner for tears, pin holes, broken stitching and excessive stretching. Even small holes can become catastrophic on-the-water failures if not addressed and repaired professionally.

1.2 If a dousing sleeve is used, it will protect the sail from accidental damage when being hoisted and doused. The sleeve itself should be inspected at the same time as the sail for holes and friction burns caused by control lines.

1.3 If a furling system is used, the sail should be unfurled and flaked for extended periods of storage – this will preserve the strength and life of the cloth.

1.4 If a furling system is used, the furling gear, including the cable, should be visually inspected for damage and proper mechanical function.

1.5 Evaluate for wash bi-annually (see discussion on page 16).

1.6 Always dry spinnaker thoroughly before storing to prevent colored fabrics from bleeding and mildew.

ANNUAL SERVICE CHECKLISTS

SEASON	1	2	3	4	5	6	7
ROLLER FURLING HEADSAIL							
Check for spreader/mast wear on leech and UV cover. Are installed chafe patches located correctly?	•	•	•	•	•	•	•
Check vertical and roller furling batten pockets and battens for wear. Ensure inboard end reinforcements for batten pockets are robust and batten tensioning systems are functioning correctly, including elastic webbing.	•	•	•	•	•	•	•
Check luff tape for chafe and tears at the ends, extrusion joints, and where luff tape exits feeder.		•	•	•	•	•	•
Check foot tape for chafe.		•	•	•	•	•	•
Check 'inside' of sail for UV damage.	•	•	•	•	•	•	•
Wash sail.		•		•		•	
Check exposed stitching on UV covers for thread degradation.			•	•	•	•	•
Check corner attachment webbings for dehydration, suppleness, and fraying.			•	•	•	•	•
Check stitching on yacht canvas, including sail covers, dodgers, biminis, etc.			•	•	•	•	•
Check integrity of UV covers.		•	•	•	•	•	•
Check the head/tack/clew sections for chafe.				•	•	•	•
Obtain and evaluate photos of sail in flying position.	•			•	•	•	•
HANK-ON HEADSAIL							
Check hanks for binding. Look for wear along inside top hanks.	•	•	•	•	•	•	•
Follow recommendations above for furling headsails without the considerations for UV covers.	PER RECOMMENDATIONS ABOVE						

A "SEASON" IS 4-6 MONTHS OF MODERATE SAILING A FEW TIMES A WEEK UNDER MODERATE CONDITIONS. SAILING MORE OFTEN, IN HARSH CONDITIONS, OR FOR LONGER PERIODS WILL LEAD TO AN ACCELERATED MAINTENANCE SCHEDULE.



SEASON	1	2	3	4	5	6	7
MAINSAIL							
Look for chafe marks on full-length batten pockets.	•	•	•	•	•	•	•
For in-boom furling mainsails, check inboard ends of all batten pockets for chafe and fraying.	•	•	•	•	•	•	•
For in-mast furling mainsails, check inner edge of clew UV cover for UV damage or excess dirt.	•	•	•	•	•	•	•
Check hand stitching on luff slides for chafe/fraying.		•	•	•	•	•	•
Bolt ropes: Check at head/batten pocket/tack for chafe.		•	•	•	•	•	•
Luff/foot attachments with pressed grommets: Check for wrinkles originating at the grommet, and extending into body of sail.		•	•	•	•	•	•
Check batten pockets for wear. Ensure inboard end reinforcements for batten pockets are robust and batten tensioning systems are functioning correctly.		•	•	•	•	•	•
Check battens for cracking/splintering.		•	•	•	•	•	•
Wash sail.		•		•		•	
Examine leech of sail for indications of excess dirt or UV damage.			•	•	•	•	•
Obtain and evaluate photos of sail in flying position.	•			•	•	•	•
SPINNAKER *INSPECT ANNUALLY*							
Inspect entire sail for small holes.	•	•	•	•	•	•	•
Inspect dousing sleeve for holes and friction burns.	•	•	•	•	•	•	•
Furling systems: Unfurl and flake sail for extended storage.	•	•	•	•	•	•	•
Furling systems: Inspect all components for damage and proper mechanical function.	•	•	•	•	•	•	•
Evaluate for sail washing.	•	•	•	•	•	•	•

RESTORING SAIL PERFORMANCE WITH PRECISION RECUTS

Sail shape and minimizing stretch are two key variables in maintaining optimum upwind performance, and reducing heel and weather helm. These factors also extend a sail's wind range before reefing or furling become necessary and have a big impact on the functionality of sail handling systems.

Dacron sails, even those made with the highest quality sailcloth, are most vulnerable to stretch. Membrane sails are more stretch resistant, which improves long-term shape retention. In both cases, however, shape changes will occur over time, affecting sail performance.

Quantum's Precision Recuts give new life to older sails by restoring the sail up to about 90% of its original shape. Reshaping techniques can be applied to both Dacron and membrane sails to yield a sail that will allow you to point higher, sail faster, and is easier to trim.

The condition of the sailcloth is key; it must not be too worn and stretchy or the adjustments will not produce the desired results. With good fabric, reshaping can generally be done once or twice during the life of a sail, returning your sail to peak performance at a cost far less than the price of a new sail.

HOW TO TAKE PHOTOS FOR SAIL SHAPE ANALYSIS

A sail shape analysis using photos of your flying sail is the first step in deciding if it is a candidate for a Precision Recut. For this reason, we highly recommend keeping a digital photo library of your sails across their lifespan. This data will help you become more adept at understanding sail shape and assist your sailmaker in evaluating and recommending a recut. Here are some tips for taking photos for sail shape analysis.

1. Sail must be full, on a close-hauled course and trimmed correctly.
2. Photos should be taken from the mid-foot of the sail in question, with the lens aimed at the head of the sail.
3. Rotate the camera to capture the full length of the lowest draft stripe.
4. Take a variety of photos from this location as well as photos of any specific problem area on the sail.
5. Where practical, take a few photos from the stern of the yacht, with the lens pointed forward toward the bow and up towards the head of each sail.
6. It is very important to note the conditions when the photographs were taken: time, date, wind speed, point of sail, halyard and sheet tensions, control line settings, backstay pressure, sea state – anything and everything related to the sailing conditions at time of photography.

- Find more information on Precision Recuts at www.quantumsails.com/services&support or contact your Quantum representative or service technician.

BROAD SEAM RESHAPE

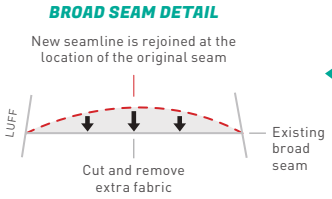

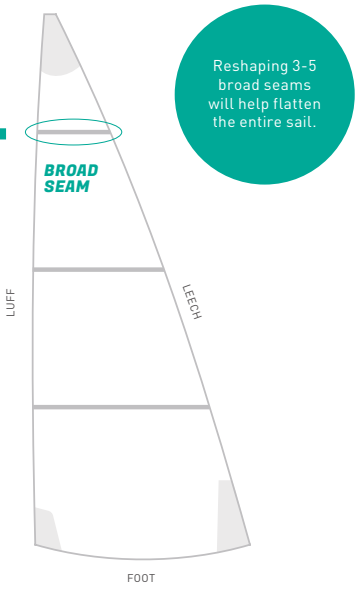

WHAT TO LOOK FOR: DEEP DRAFT. FULL SAIL. CAN'T POINT VERY HIGH.

The sail depth becomes fuller and more rounded. The draft moves aft. You're no longer able to point as high as when the sail was new. The boat becomes harder to steer, heels more and responsiveness is slowed.

SOLUTION: SEAM RESHAPE

Seams are reshaped and extra fabric is removed. This procedure flattens the sail and helps return the draft to the original and optimal location. Generally, three to five seams are remade to achieve desired shape. With the flatter sail you can now point higher than before! Your sail is flatter, faster and more efficient. Your boat sails more upright, and it far more responsive.

LUFF CURVE RESHAPE

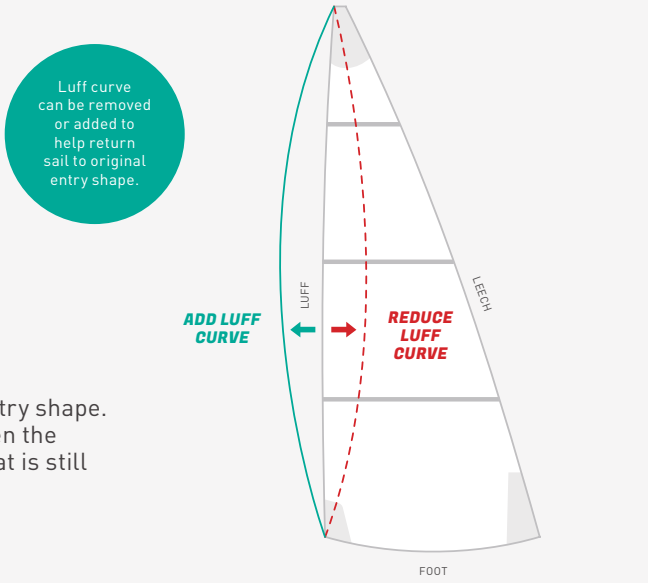

WHAT TO LOOK FOR: REDUCED ENTRY. SAIL IS HARD TO STEER.

As sails age, their entry is reduced due to a variety of factors. Stretch, as well as over-tensioning the halyard, can reduce entry. Reduced entry will make the sail harder to trim, less efficient and make steering more difficult–and less fun!

SOLUTION: LUFF CURVE CHANGE

Luff curve can be restored to help return the sail to its original entry shape. Sometimes a luff curve change is made to remove entry and flatten the sail. Returning entry gives you a bigger range to steer inside of that is still ultrafast. Steering will be easier and you'll be able to go faster.

LEECH TAKE-UP

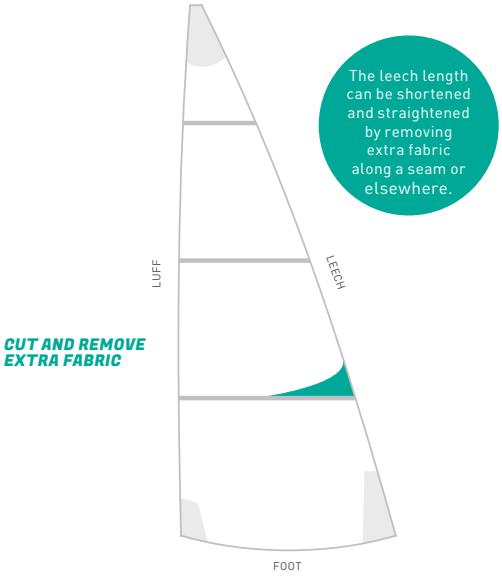

WHAT TO LOOK FOR: LEECH FALLS AWAY. SAIL ISN'T DELIVERING POWER.

On cruising Dacron® mainsails and genoas, the leech can stretch and fall away, making the sail more difficult to trim and reducing boat speed. This is especially prevalent on larger cruising mainsails and mainsails with large roaches. Leech stretch can also hamper the use of furling systems.

SOLUTION: LEECH TAKE-UP

By removing extra fabric at a seam or elsewhere on the sail, the leech can be shortened and straightened to its original dimensions and shape. By bringing the leech back to its in-line design shape, the sail is once again a proper foil and will deliver efficient power.

SAIL CLEANING

SAIL WASHING

There are two main benefits to washing your sails: One, clean sails look nicer than dirty ones, and two, washing removes salt, dirt, and other particulate that will otherwise damage the sail over time.

The first one is easy to monitor. Once your sails get dirty to a point you find no longer acceptable, they should be washed. This can be done as often as once a year or as infrequently as never.

Looking out for particulate salt and dirt, however, can be a bit more difficult and requires closer observation. As mentioned previously, salt crystals and dirt particles will, over time, damage your sail and should be removed regularly. Salt crystals act like tiny prisms in the sunlight, damaging the sail through intensified sunlight. Other particles will chafe woven materials (such as Dacron and nylon) as well as scratch the outer skins of membrane sails. Over time, this chafe will weaken and damage the sailcloth.

How do you know when to wash a sail based on potential damage from the dirt/salt? We've got a super-sophisticated 'lick test'. Run your finger across the body of the sail, then taste! In all honesty, it can be that easy. You should also keep in mind your style and history of sailing. Doing a lot of inland, freshwater lake sailing? Washing your sails based on accumulation of salt isn't going to be as applicable. If you're a sport boat racer with membrane sails who races offshore, you're going to likely want to wash your sails annually.

MILDEW PREVENTION & REMOVAL

Unfortunately, the marine environment supports mildew growth, which can damage your sails. A tightly furled headsail or a mainsail flaked over the boom provide the kind of warm, dark, moist environment where mildew thrives. You can mitigate a large amount of risk through some simple steps.

STEPS TO MITIGATE MILDEW

1. Avoid storing a furled headsail for extended periods of time while wet. If you don't have the time to dry the sail before furling and leaving the yacht, give Quantum a call and we can come down, unfurl the sail, allow it to dry, and re-furl properly.

2. The same goes for the mainsail – make sure your cover is waterproof and up to the task. Quantum lofts can re-waterproof your covers to ensure they're protecting your valuable sail.

3. Stop mildew in its tracks the instant you first see it. During our thorough, multipoint inspections, our trained sail technicians examine every square foot of your sails and will identify the presence of any mildew. They will discuss remediation techniques with you and review preventive measures to reduce mildew growth.

If mildew does take hold in one of your sails, don't despair! Start by calling the local loft and talking to a service tech. There are a few treatments available to eliminate the mildew and its staining effects. We can provide a range of treatments from spot cleaning, to Vacu-Washing the whole sail, which eliminates mildew that is rampant across the entire body of the sail. We can also recommend and apply environmentally friendly, translucent, liquid lubricants that will inhibit future mildew growth. Your local Quantum loft will be able to identify and provide the best solution based on your individual needs.

PREVENT & SPOT UV DAMAGE

There are two primary factors that contribute to sail age: number of sailing hours and amount of UV exposure. Either of these factors alone or combined will affect the condition of your sails. The more you sail and/or the greater the UV exposure, the more frequently your sails should be thoroughly inspected and serviced.

It's pretty evident that a lot of sailing, particularly in big wind, can take its toll on your sails. What's less obvious to the casual observer is the amount of damage that UV exposure will cause to the structural body of a sail. Sunlight is vicious! The sailcloth fibers and thread become weakened, and while sailing, stress on the sails can cause the weakened threads to break. Webbings become dehydrated, losing their suppleness, and will fray; stitching will break.

Our number-one sail care tip is to protect sails from unnecessary exposure to sunlight when not under sail. We highly recommend sacrificial UV covers on furling headsails and encourage covering your mainsail when not in use. More tips on protecting your sails from the sun can be found in the Resource & Expertise section at quantumsails.com.

SIGNS OF UV DAMAGE

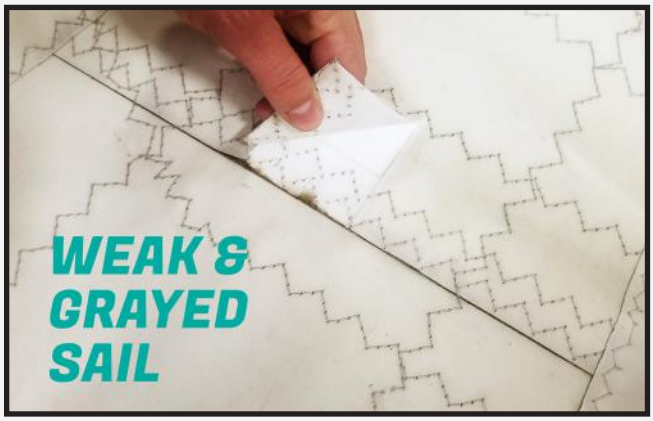



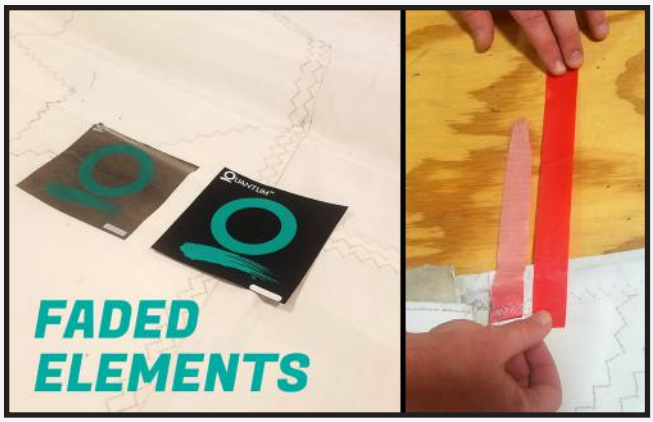



FREQUENTLY ASKED QUESTIONS

WHAT ARE THE BEST WAYS TO PROTECT MY SAILS FROM UV DAMAGE?

This may be just a matter of furling the sail if it is a roller-furling headsail or an in-mast or in-boom furling mainsail, but for a non-furling mainsail, this means using a sturdy and functional cover or stowing the sail somewhere below deck or elsewhere out of those harmful UV rays when not in use. For a hank-on staysail or jib, this means that when the sail is not in use, the sail should at least be bagged on deck. If the sail is not going to be in use for a longer time (or until the next trip out) the sail should be bagged and taken below.

I INVESTED IN A SEWN-ON UV COVER FOR MY SAILS. HOW CAN I EXTEND ITS LIFE?

Many sails have sewn-on UV covers, but this does not mean the sail can be left in the harsh elements without maintenance and expected to last forever. Sunbrella and WeatherMax® offer great protection but can become damaged from flogging if the stitching is left to degrade past its useful life in the harmful UV rays. The best way to avoid this is to have the cover re-stitched roughly every three years. Lightweight options such as UV-treated Dacron are great for racer-cruisers and some sails like furling code zeros, but these materials are not inherently UV resistant. Depending on boat location and amount of time in the sun, these covers may have a lifespan of only a couple of seasons. Once the UV treatment has worn off, the cover should be replaced. Covers should also be repaired if damaged: If you can see the sailcloth below the cover so can the sun!

HOW MANY YEARS WILL MY SAILS LAST?

In our sail lofts, we generally refer to the life of a sail in seasons. For example, the main sailing season in Annapolis can begin in the early spring and extend late into the fall; we consider that one season of life for your sail. If your sails have spent the sailing season furled on your headstay or in your mast or boom to endure the frigid months of winter, then another season has been spent. Another consideration is downtime during the sailing season. If you know your boat is going to be idle for at least a month or more, you can extend the lifespan of your sails by taking them off of your boat and stowing them. If time or distance prevents you from handling this, our service department is happy to handle this chore, removing the sails and taking them back to the loft for inspection or storage.

DO I NEED TO HAVE MY SAILS INSPECTED REGULARLY, AND IF SO, HOW OFTEN?

A lot of catastrophic sail failures are traced back to a small repair that was never made. Regular inspections are very important. First, don't wait to have something minor repaired—if you notice a little hole or chafe, address the problem while it is still small. We have seen more than a few shredded sails from people who told us they had been meaning to get that spot patched. Second, do an overall inspection of your sails once a year. If you prefer to have your sails looked over by a professional, contact your local loft. Your sails will be spread out on the loft floor in good lighting and be reviewed by a technician who sees the same problems on a variety of sails every day. They will also advise preventive steps to avoid any failure while on the water. If a trip to the loft doesn't fit your schedule, then we can pick up your sails for you.

Find more FAQs at
www.quantumsails.com/services&support



WHEN YOU'RE NOT PLANNING TO USE A HANK-ON STAYSAIL OR JIB FOR A WHILE, PROTECT IT FROM HARMFUL UV RAYS BY BAGGING THE SAIL AND STOWING ON DECK OR DOWN BELOW.



quantumsails.com

© 2019 Quantum Sails. All rights reserved.