HORM

Numero 3



FINITURE LEGNO

CAMPIONI TESSUTO E PELLE

MODELLI CAD

MONTAGGIO E GARANZIA

Back Office Commerciale / Sales Back Office			
Italia	0434 1979 102	ordini@horm.it	https://wa.me/3904341979102
World	+39 0434 1979 101	orders@horm.it	https://wa.me/3904341979 101

IT — Base in acciaio satinato. Stelo in noce canaletto massello CP0131. Paralume in tessuto accoppiato a PVC. Eurospina CEE 7/16.

EN — Base in brushed steel. Stem in solid walnut CP0131. Fabric and PVC lampshade. Europlug CEE 7/16.

FR — Base en acier brossé. Tige en noyer massif CP0131. Abat-jour en tissu et PVC. Europlug CEE 7/16.

DE — Basis aus satiniertem Stahl. Ständer aus massivem Nussbaum CP0131. Lampenschirm aus Textil-PVC-Verbundstoff. Eurostecker CEE 7/16.

ES — Base de acero satinado. Pie de nogal negro macizo CP0131. Pantalla de tela combinada con PVC. Enchufe europeo CEE 7/16.

+++

Lampadina non inclusa. Si raccomanda l'uso di una lampadina fluorescente compatta 60W MAX o lampadina a LED con attacco E27.

+++

Light bulb not included. We recommend the use of a compact fluorescent light bulb 60W MAX or LED bulb with E27 connector.

+++

Ampoule non incluse. Nous recommandons l'utilisation d'une ampoule fluo compacte 60W MAX ou ampoule LED with culot E27.

+++

Leuchtmittel nicht im Lieferumfang enthalten. Es empfiehlt sich die Verwendung eine mpaktleuchtstofflampe MAX. 60 W. oder LED-Birne mit E27-Gewinde.

+++

Bombilla no incluida. Se recomienda utilizar una bombilla fluorescente compacta 60 W MÁX o bombilla de LED con casquillo E27.

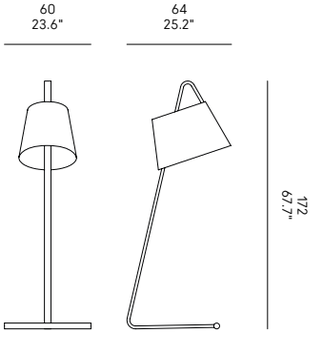

	C.O.M. Client's Own Material	Tessuto Fabric Tissu Stoff Tejido				Metraggio Metreage Métrage Stoffbedarf Metraje (roll H 140cm)
		Basic	Superior	Top	Exclusive	
NUMERO 3	IPXTCL	IPXT0	IPXT1	IPXT2	IPXT3	**m 1,5**

ADAPTER / THE LAMP SHIPS WITH EUROPLUG CEE 7/16



2 PIN EUROPLUG TO 3 PIN UK PLUG — AA0002

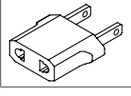

2 PIN EUROPLUG TO 2 PIN USA PLUG — AA0003

Prezzo Consigliato al Pubblico = Prezzo Minimo Pubblicizzabile — MSRP-Manufacturer's Suggested Retail Price = MAP-Minimum Advertised Price

2026/2027 Incoterms: Ex-Works Italy **IVA esclusa** **VAT excluded** **Hors taxes** **Ohne MwSt** **IVA a parte**