

CH TRAX

Compact handler on tracks

ENGINEERED ACCESS & LIFTING

One machine. Seven jobs.

Attachments pin into the boom tip. Auto-detect identifies the attachment installed and sets the load parameters.



Hook
5,000 lb



Forks
1,500 lb



Glass lifter
1,400 lb



Jib
1,000 lb



Man basket
500 lb



Winch
3,000 lb



Pipe handler
1,000 lb

Machine specifications.

Three-section boom, two telescoping.

5,000 lb
HOOK CAPACITY
BOOM FULLY RETRACTED

16′ 6″
HOOK HORIZONTAL REACH
BOOM LEVEL, FULLY EXTENDED

24′
MAX HOOK HEIGHT · VERTICAL
BOOM FULLY RAISED,
FULLY EXTENDED

7
ATTACHMENTS
AUTO-DETECTED

25 HP
KOHLER PROPANE ENGINE

1.1 mph
DRIVE SPEED

SPECIFICATIONS

Boom	3 sections · 1 fixed, 2 telescoping
Boom angle	−15° to 60° from horizontal
Hook horizontal reach	about 16′ 6″ · boom level and fully extended
Hook height	about 24′ vertical · boom fully raised and extended
Power	25 HP Kohler propane engine
Drive	2 tracks · hydraulic motor · 1.1 mph (1.8 km/h)
Steering	Track speed differential
Brakes	2 · spring applied · hydraulic release
Weight	6,000 lb (2,721 kg)

CONTROLS & SAFETY

Rated load limiter
Shows boom angle, horizontal reach, current load and max capacity.

Progressive function control
Slows drive with boom reach and load.

Vertical path hoisting
One joystick moves the hook straight up and down.

Attachment auto-detect
Sets the load parameters for the attachment installed.

Track extend and retract
Each track extends on its own to level the chassis on uneven ground.

Radio remote
2.4 GHz. HI/LOW function speed switch.

Hook

5,000 lb RATED CAPACITY



WATCH VIDEO · 0:19

Rated with the boom fully retracted.

HOOK

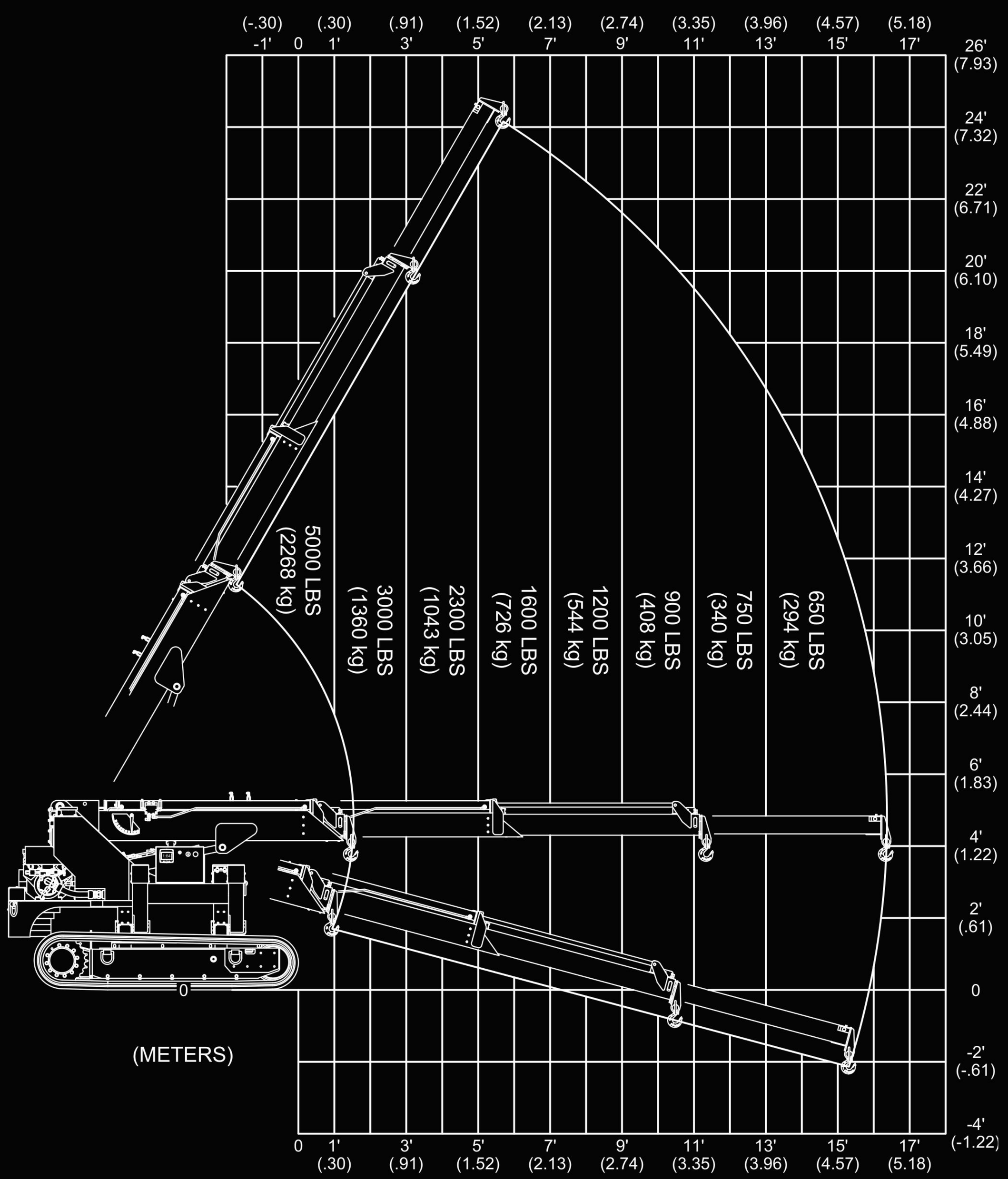

SHOWN WITH TRACKS EXTENDED
MAXIMUM LOAD ON PULL-OUT WHEN EXTENDED = 2300 LBS

Rated capacity by horizontal reach (across, from the front of the track) and vertical height (up), tracks extended. The rated load limiter shows the capacity at the current boom position.

Forks

1,500 lb RATED CAPACITY



WATCH VIDEO · 0:24

Forks or pipe cradle on the powered boom tip.

FORKS

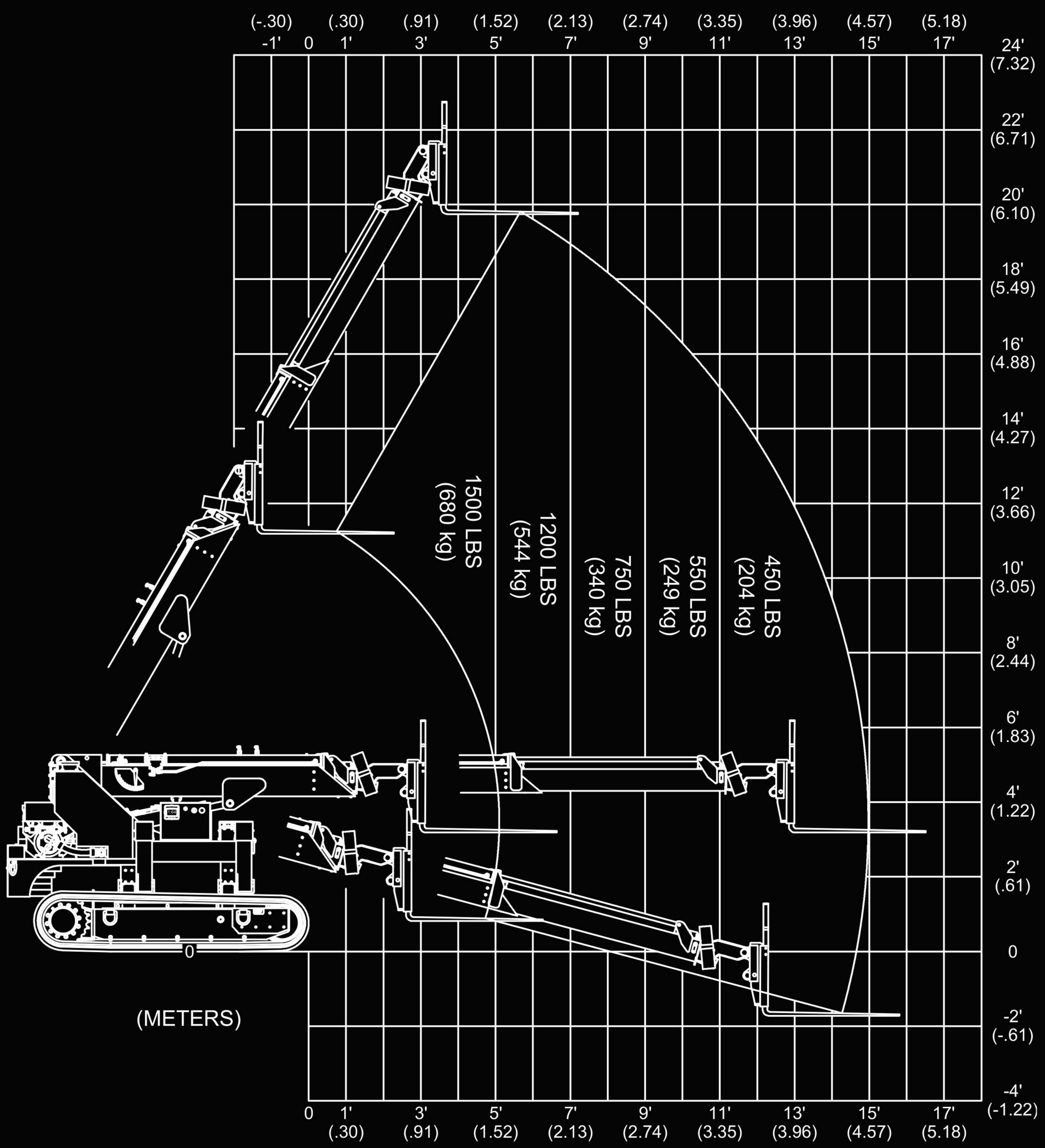

SHOWN WITH TRACKS EXTENDED

Rated capacity by horizontal reach (across, from the front of the track) and vertical height (up), tracks extended. The rated load limiter shows the capacity at the current boom position.

Glass lifter

1,400 lb RATED CAPACITY



3-axis manipulator: raises and lowers the glass 90° each way, turns it 90° left and right at the wrist, and spins it 90° each way (180° total). Free-rotate valves for hand positioning.

GLASS LIFTER

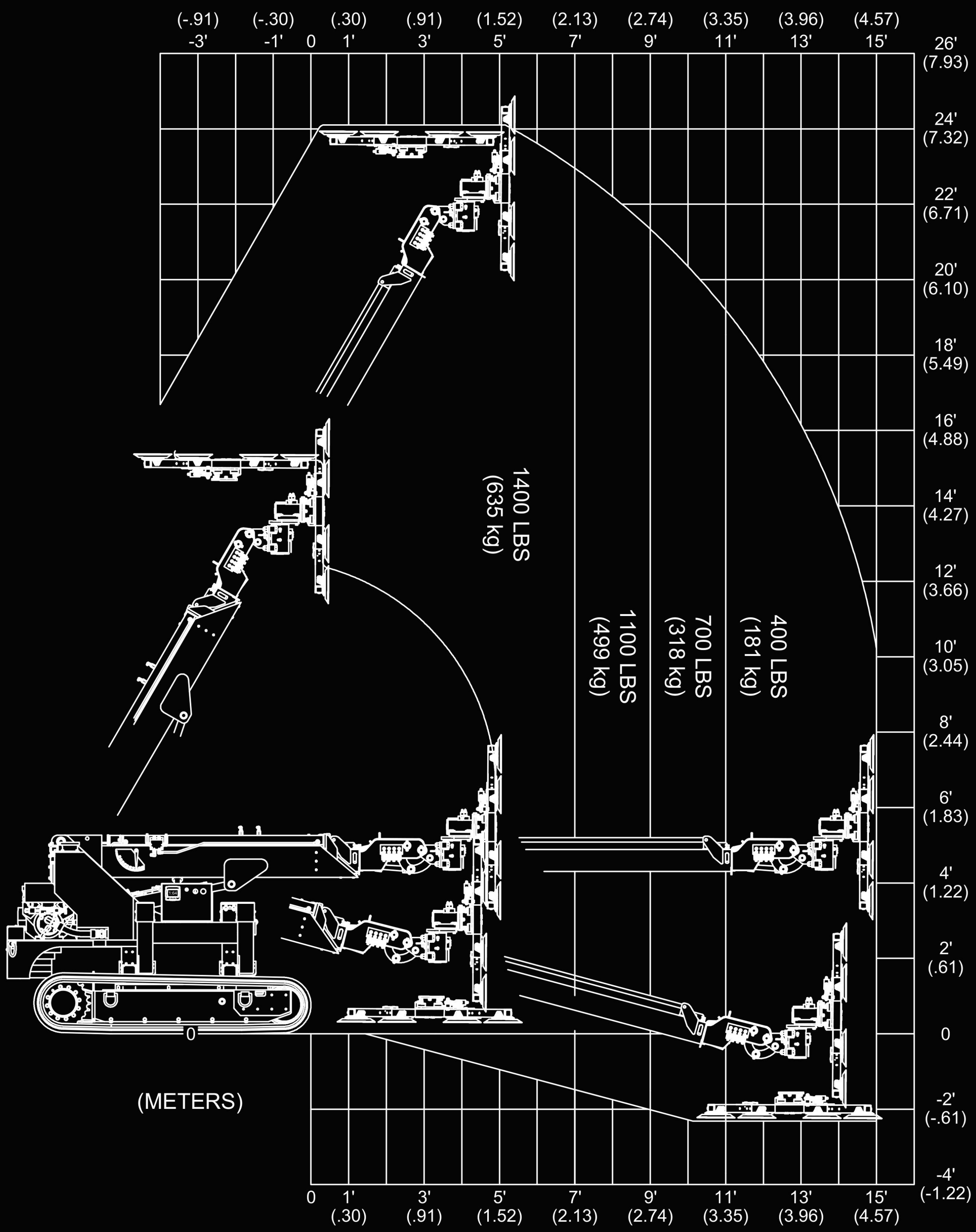

SHOWN WITH TRACKS EXTENDED

Rated capacity by horizontal reach (across, from the front of the track) and vertical height (up), tracks extended. The rated load limiter shows the capacity at the current boom position.

Jib

1,000 lb RATED CAPACITY



WATCH VIDEO · 0:24

Mounts on the powered boom tip.

JIB

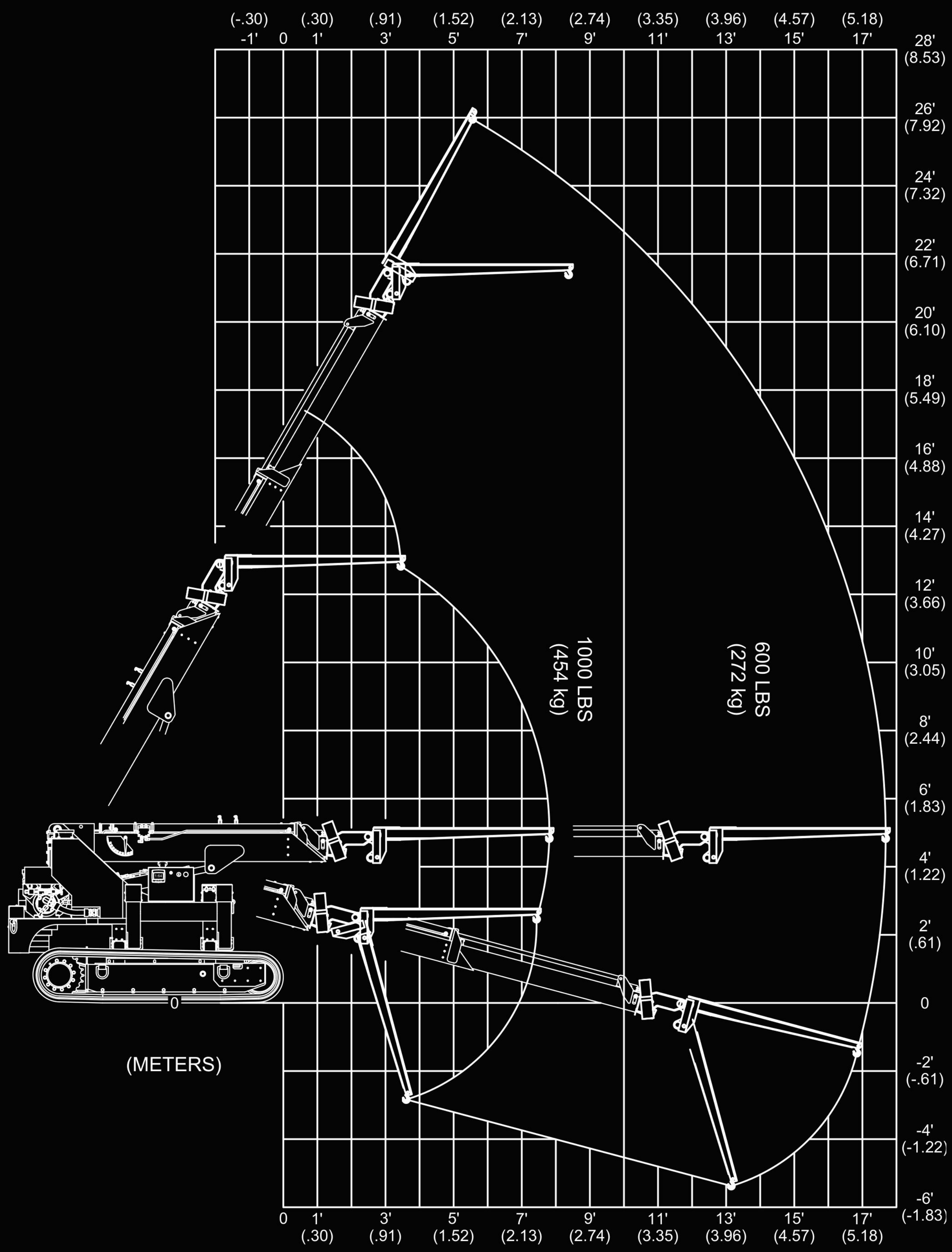

SHOWN WITH TRACKS EXTENDED

Rated capacity by horizontal reach (across, from the front of the track) and vertical height (up), tracks extended. The rated load limiter shows the capacity at the current boom position.

Man basket

500 lb RATED CAPACITY



WATCH VIDEO · 0:24

Platform controls with a footswitch enable.

MAN BASKET

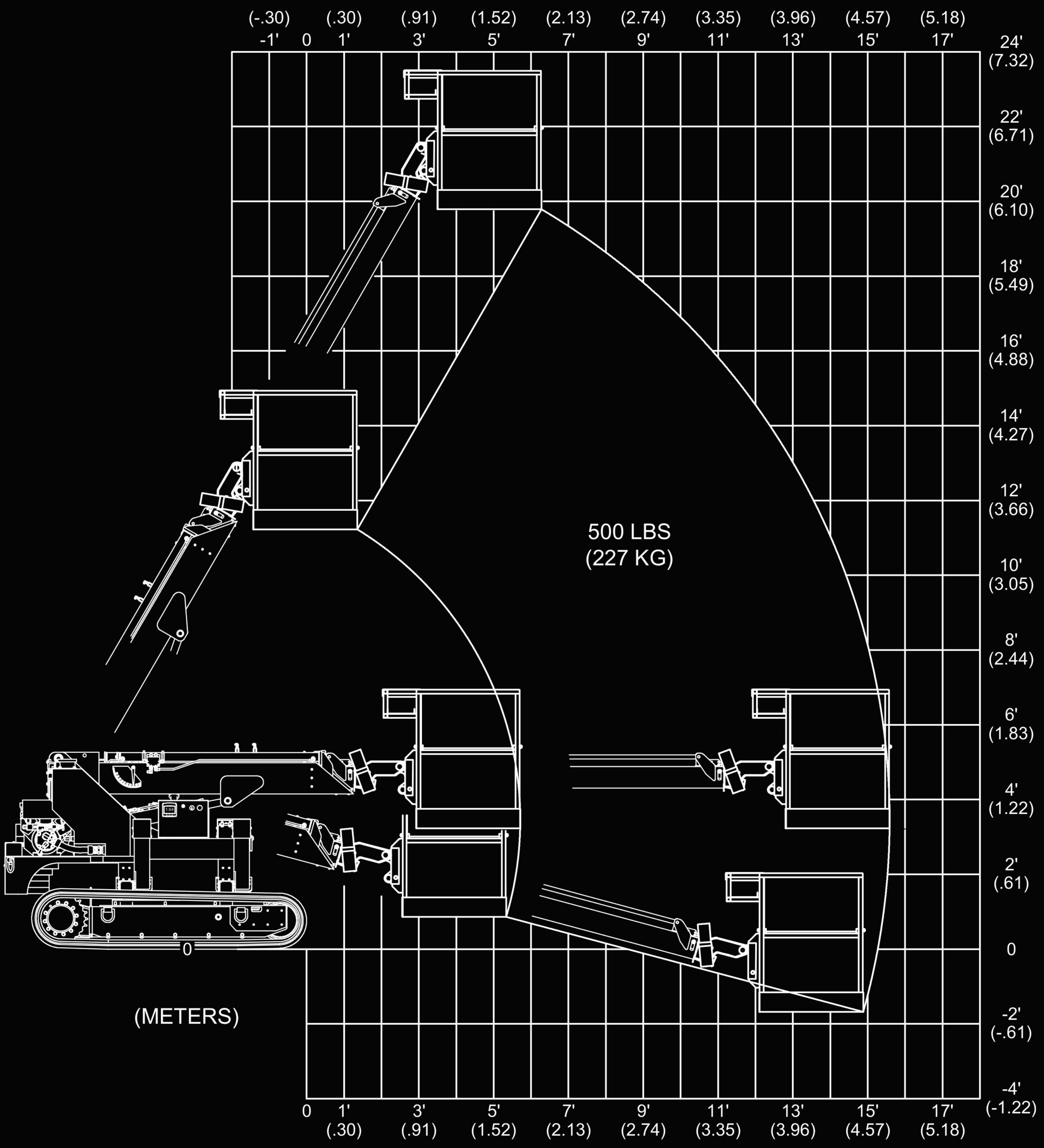

SHOWN WITH TRACKS EXTENDED

Rated capacity by horizontal reach (across, from the front of the track) and vertical height (up), tracks extended. The rated load limiter shows the capacity at the current boom position.

Winch

3,000 lb RATED CAPACITY



WATCH VIDEO · 0:36

3,000 lb winch capacity.

WINCH

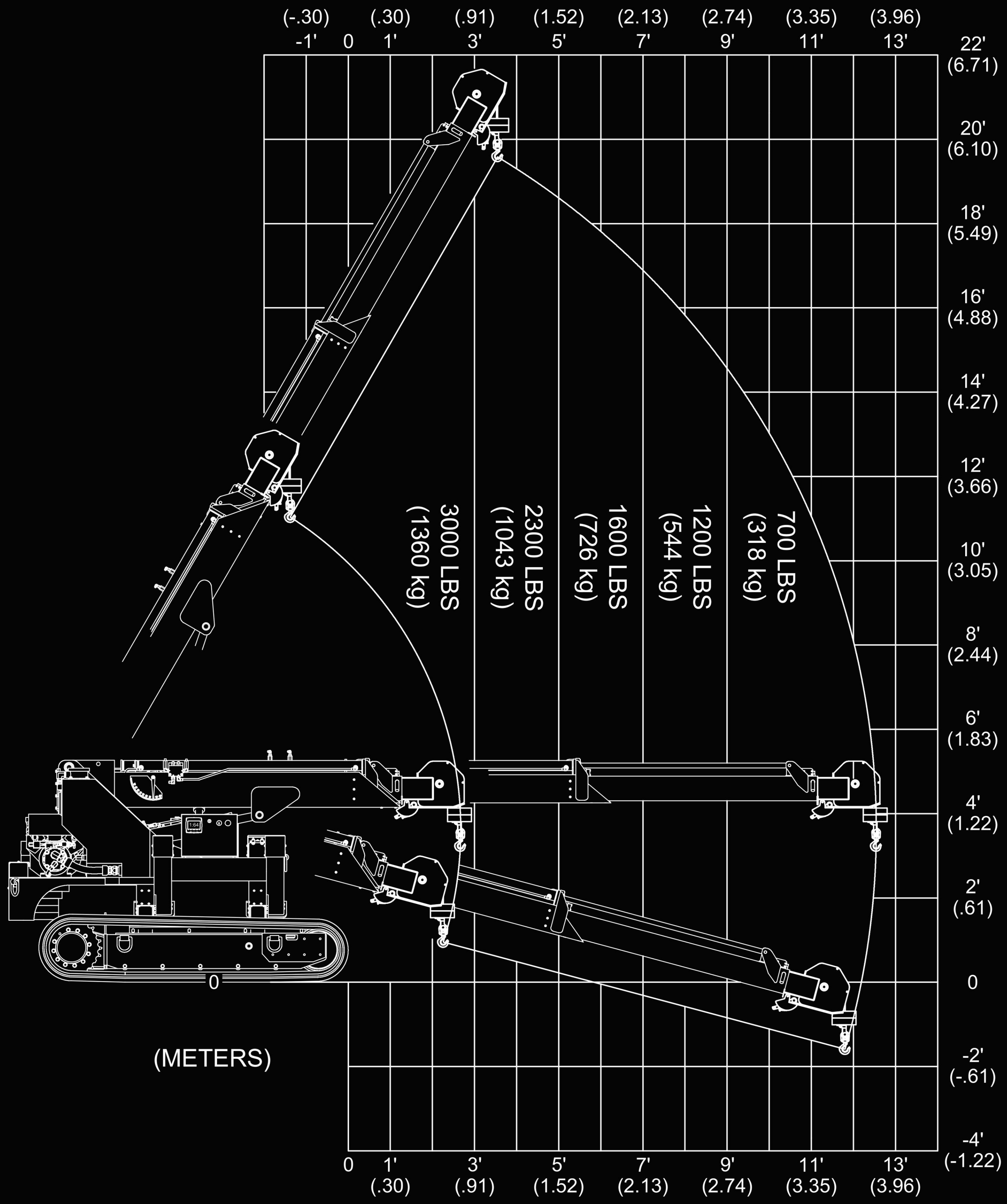

SHOWN WITH TRACKS EXTENDED

Rated capacity by horizontal reach (across, from the front of the track) and vertical height (up), tracks extended. The rated load limiter shows the capacity at the current boom position.

Pipe handler

1,000 lb RATED CAPACITY



Grips pipe, light poles, mullions and beams.

PIPE HANDLER

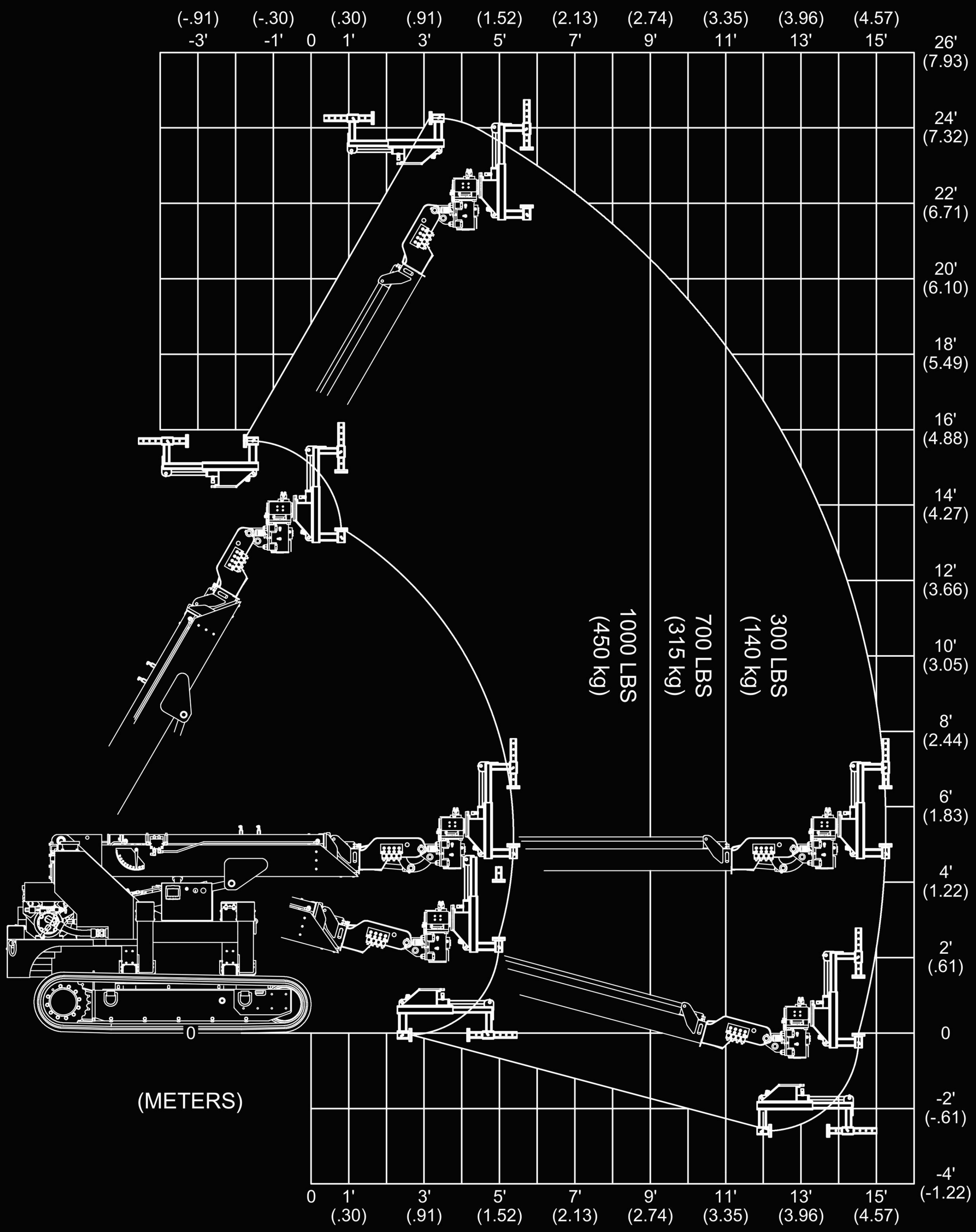

SHOWN WITH TRACKS EXTENDED

Rated capacity by horizontal reach (across, from the front of the track) and vertical height (up), tracks extended. The rated load limiter shows the capacity at the current boom position.

Bailey | Engineered Access & Lifting

TRUSTED BY

BOEING · DPR CONSTRUCTION · NASA · LOCKHEED MARTIN · NORTHROP GRUMMAN · Raytheon An RTX Business · U.S. AIR FORCE · AIRBUS

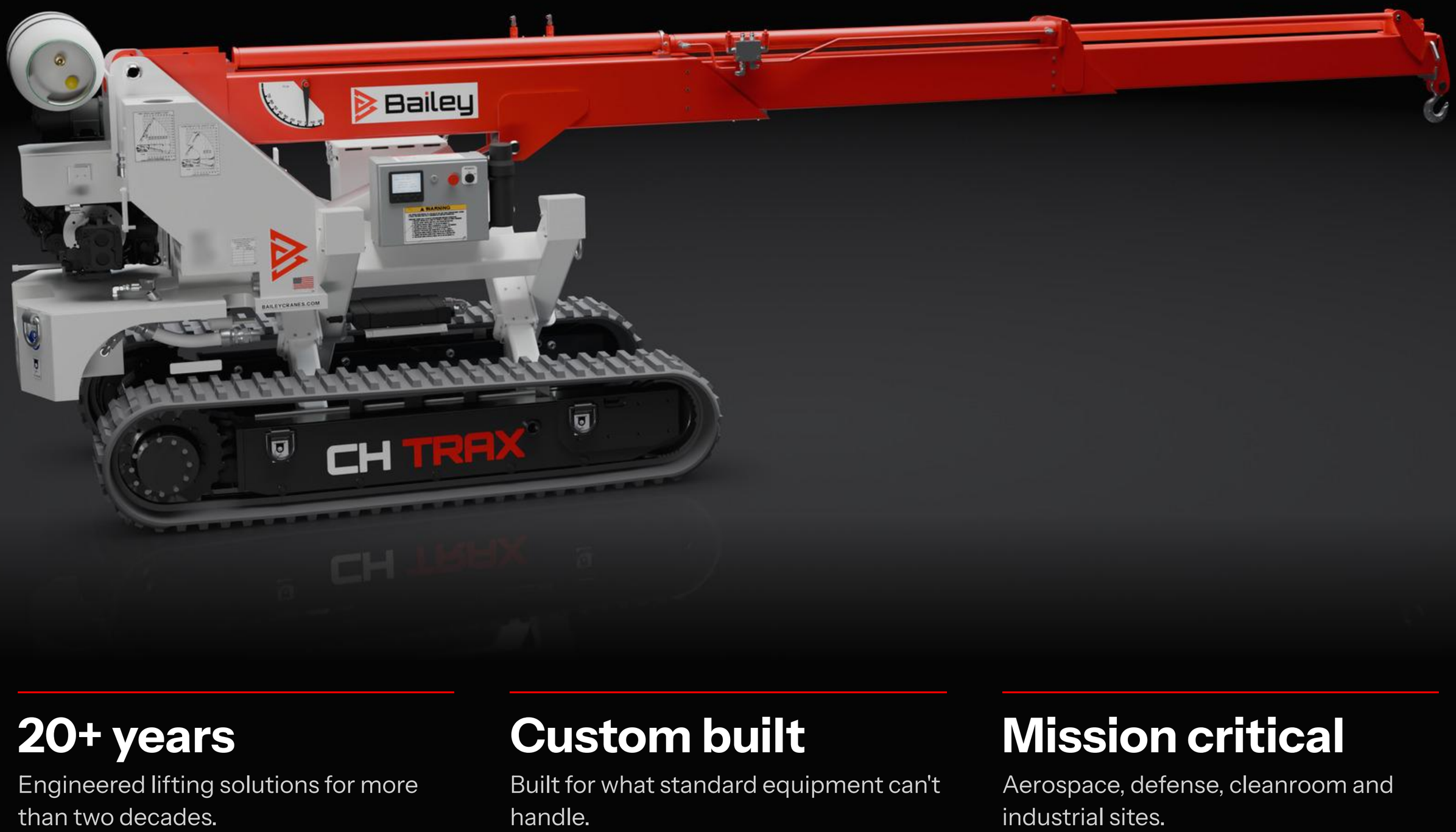

20+ years

Engineered lifting solutions for more than two decades.

Custom built

Built for what standard equipment can't handle.

Mission critical

Aerospace, defense, cleanroom and industrial sites.

Let's get to work.

Tim Cooley

262-744-7893 · tim@baileycranes.com

baileycranes.com

Bailey | Engineered Access & Lifting

SBA U.S. Small Business Administration — SERVICE-DISABLED VETERAN-OWNED CERTIFIED

ISO 9001:2015 REGISTERED MANUFACTURER · MUSKEGO, WISCONSIN

Specifications subject to change