UP TO 90% LABOUR SAVINGS

metpro Group

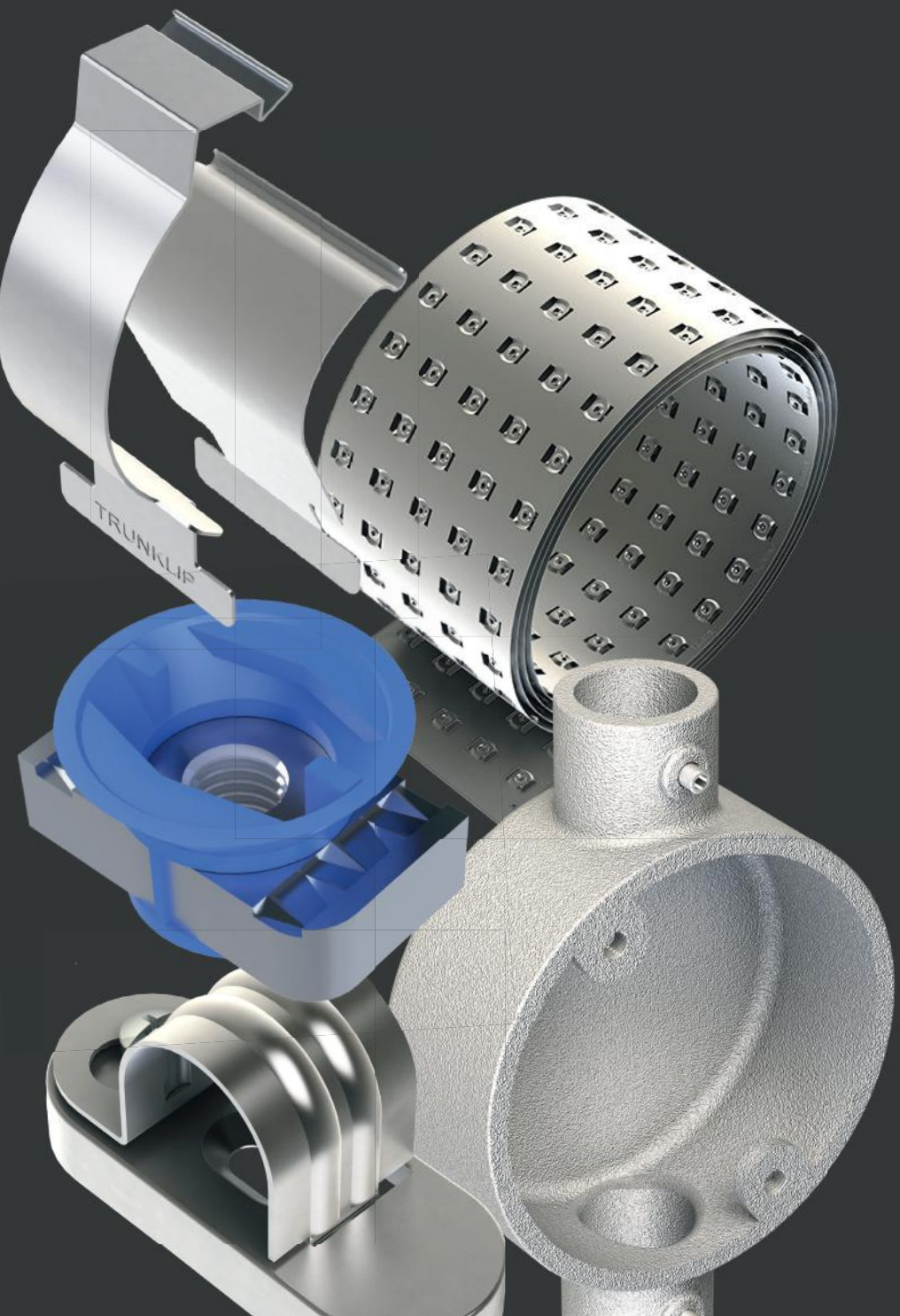

CONLOK
STEEL CONDUIT SYSTEM

ROLLATRAY

EASYFIT
CHANNEL NUTS

RAPID
SADDLE

TRUNKLIP
TRAYKLIP

CONLOK®
STEEL CONDUIT SYSTEM

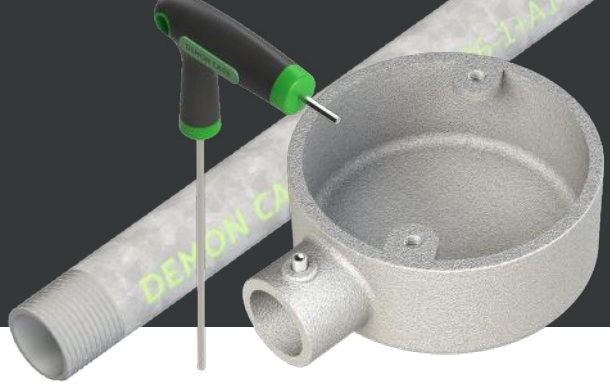

A unique new product designed to dramatically increase installation speeds and reduce downtime in a wide variety of installations.

Key features & benefits



No need to thread tube
With Conlok®'s unique built-in grub screw



Fast-fix solution
Ideal for major projects where cost & safety are critical



Fully galvanised system
Offering greater corrosion resistance



Full range of accessories
Offering all the essential items for quick installations

Where you can find Conlok®

Tottenham Hotspur FC Stadium, London

Sir Chris Hoy Velodrome, Glasgow

Midland Metropolitan Hospital, West Midlands

Tees Rep Biomass Power Station, Glasgow

How it works

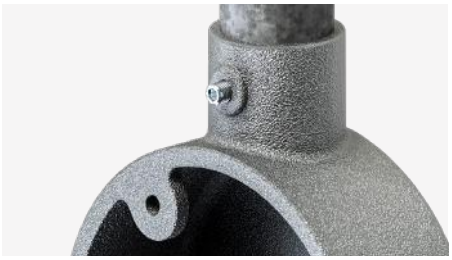

INSERT

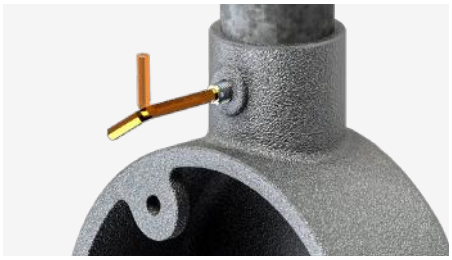

SECURE



DONE

- Increased on-site safety
- Compliant to the latest standards
- Reduced on-site storage
- Used on major UK projects

+44 (0) 121 552 2100 | sales@metpro.co.uk | Order Online at metpro.co.uk

UP TO
75% LABOUR SAVINGS

Traditional. **Upgraded.**

Where can Conlok be installed?

Internal & External Installations

Corrosion resistance is an incredibly important part of any installation.

If components with the wrong finish are installed, this effectively places the entire system at risk of failure.

Featuring a more traditional Class 4 Hot Dip Galvanised (HDG) surface coating, this highly corrosion-resistant finish is designed to protect cables from damage and the elements.

External applications are where the self-sacrificing properties of this finish are of significant benefit, ensuring wires and cables are always kept safe from wind, rain, harsh sunlight, sand and other extremes of nature.

Internally, an HDG finish offers all these same benefits, particularly when installed within challenging environments such as the London Underground where cables are subject to potential ingress of dust and water caused by the frequent winds in excess of 200mph.

Clean Rooms

With more and more computer-chip manufacturers being established and data centre construction seeing significant growth, cable management systems must be prepared to cater for these specialised environments.

A particular concern within these applications is zinc whiskers, the presence of which can cause a wide variety of issues, from short circuits to total equipment failure.

Featuring a highly-specialised protective coating, the Conlok® Clean Room system is purposefully designed to offer the expected levels of cable protection, whilst also preventing the dissipation of zinc whiskers and providing an aesthetically-pleasing and hygienic finish.

We recommend the use of this finish in the following environments; data centres, laboratories, microelectronics processing plants, biotechnology plants, pharmaceutical manufacturing plants, hospitals, and food processing plants.

Key technical information

Conlok Class 4 HDG Steel Conduit Tube

Conforms to BS EN 61386-1:2008+A1:2019 (Conduit Systems for Cable Management)	All lengths are ink jet marked: Demon Cato - BSEN61386+A1 - 5557 - Class 4 -(20 or 25mm as required)	**BSEN61386-1: 2008+A1:2019** Achieved the highest Class in all tests as specified

Conlok Clean Room Steel Conduit Tube

Conforms to BS EN 61386-1:2008+A1:2019 (Conduit Systems for Cable Management)	All lengths are ink jet marked: Demon Cato - BSEN61386+A1 - 5557 - Class 4 -(20 or 25mm as required)	Highly specialised clean room finish applied to both internal & external walls of each length

Conlok Class 4 HDG Conduit Boxes & Accessories

Manufactured from malleable iron with a hot dip galvanised finish to Class 4 BS EN 61386-1:2008+A1:2019	Conforms to BSEN61386-21: 2004 (Conduit Systems for Cable Management - Rigid Systems)	Conlok® grub screws are manufactured from Grade 12.9 Steel

Conlok Clean Room Conduit Boxes & Accessories

Conforms to BS EN 61386-1:2008+A1:2019 (Conduit Systems for Cable Management)	Conforms to BSEN61386-21: 2004 (Conduit Systems for Cable Management - Rigid Systems)	Highly specialised finish applied to both internal & external walls of each box and accessory

The Conlok System meets the latest standards for Earth Continuity across both Class 4 HDG and Clean Room finishes

CONLOK®
STEEL CONDUIT SYSTEM

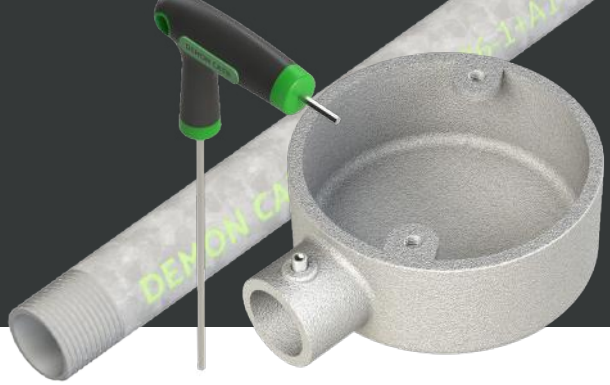

Hot Dip Galvanised

Conlok Steel Conduit Tube

Size	Product Type	Code	Inner Pack	Master Bundle
20mm	20mm x 3mtr	CLGCEXTERNAL20	8	400
25mm	20mm x 3mtr	CLGCEXTERNAL25	8	320

Conlok Conduit Boxes

Size	Box Type	Code	Pack
20mm	Terminal	CL1G	10
20mm	Through	CL2G	10
20mm	Angle	CL3G	10
20mm	Tee	CL4G	10
20mm	Intersection	CL5G	10
20mm	Branch U	CL6G	10
20mm	Branch Y	CL7G	10
25mm	Terminal	CL8G	10
25mm	Through	CL9G	10
25mm	Angle	CL10G	10
25mm	Tee	CL11G	10
25mm	Intersection	CL12G	10
25mm	Branch U	CL13G	10
25mm	Branch Y	CL14G	10
25mm	Terminal c/w 25mm hole in base	CL15G	10
20mm	20mm Back Outlet Box c/w screw	CL16G	10

Conlok Couplers, Adaptors & Bends

Size	Product Type	Code	Pack
20mm	Female Coupler	CL20FC	25
25mm	Female Coupler	CL25FC	25
20mm	Adaptor	CL20GA	40
25mm	Adaptor	CL25GA	30
20mm	Solid Coupler	CL20GC	40
25mm	Solid Coupler	CL25GC	30
20mm	Solid Bend	CL20MB	20
25mm	Solid Bend	CL25MB	10

Conlok Accessories

Size	Product Type	Code	Pack
-	Conlok Allen Key	CLKEY	1
-	Conlok Allen Key c/w 2 x Grub Screws	CLKIT	1

Clean Room

Conlok Steel Conduit Tube

Size	Product Type	Code	Inner Pack	Master Bundle
20mm	20mm x 3mtr	CLGCCLEAN20	8	400
25mm	20mm x 3mtr	CLGCCLEAN25	8	320

Conlok Conduit Boxes

Size	Box Type	Code	Pack
20mm	Terminal	CL1GCLEAN	10
20mm	Through	CL2GCLEAN	10
20mm	Angle	CL3GCLEAN	10
20mm	Tee	CL4GCLEAN	10
20mm	Intersection	CL5GCLEAN	10
20mm	Branch U	CL6GCLEAN	10
20mm	Branch Y	CL7GCLEAN	10
25mm	Terminal	CL8GCLEAN	10
25mm	Through	CL9GCLEAN	10
25mm	Angle	CL10GCLEAN	10
25mm	Tee	CL11GCLEAN	10
25mm	Intersection	CL12GCLEAN	10
25mm	Branch U	CL13GCLEAN	10
25mm	Branch Y	CL14GCLEAN	10
25mm	Terminal c/w 25mm hole in base	CL15GCLEAN	10
20mm	20mm Back Outlet Box c/w screw	CL16GCLEAN	10

Conlok Couplers, Adaptors & Bends

Size	Product Type	Code	Pack
20mm	Female Coupler	CL20FCCLEAN	25
25mm	Female Coupler	CL25FCCLEAN	25
20mm	Adaptor	CL20GACLEAN	40
25mm	Adaptor	CL25GACLEAN	30
20mm	Solid Coupler	CL20GCCLEAN	40
25mm	Solid Coupler	CL25GCCLEAN	30
20mm	Solid Bend	CL20MBCLEAN	20
25mm	Solid Bend	CL25MBCLEAN	10

Clean Room Saddles

Size	Product Type	Code	Pack
20mm	20mm Clean Room Hospital Saddle	HOSP1GCLEAN	25
25mm	25mm Clean Room Hospital Saddle	HOSP2GCLEAN	20

+44 (0) 121 552 2100 | sales@metpro.co.uk | Order Online at metpro.co.uk



We're able to further enhance our innovations to suit your requirements.

Image: Powder-coated Conlok installation - Novotel, Liverpool

RAPID® SADDLE



An innovative new saddle designed to increase installation speeds and increase safety when working at height.

Key features & benefits

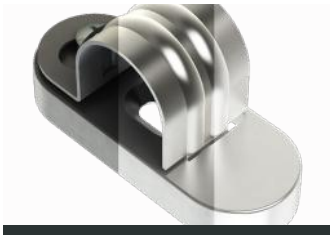

Finishes for all environments
Delta Protekt® | BZP | Clean Room

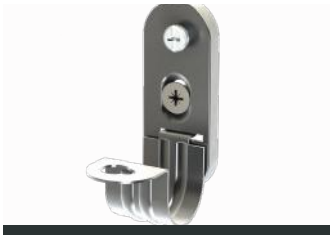

Greater on-site safety
No dropped screws or straps, ideal for working at height



Holds conduit tube in situ.
Making installations simple, even for a single installer



Single screw fixing
Locate the saddle strap & quarter turn to secure

Where you can find Rapid Saddle®

Major Regeneration Project, Bristol

Beacon College, Hereford

How it works



FIX



INSERT



SECURE

Rapid Saddle: Internal

Size	Code	Pack
20mm	RAPID20INTERNAL	100
25mm	RAPID25INTERNAL	100

Rapid Saddle: External

Size	Code	Pack
20mm	RAPID20EXTERNAL	100
25mm	RAPID25EXTERNAL	100

Rapid Saddle: Clean Room*

Size	Code	Pack
20mm	RAPID20CLEAN	100
25mm	RAPID25CLEAN	100

*Available on request

+44 (0) 121 552 2100 | sales@metpro.co.uk | Order Online at metpro.co.uk

OVER
40% LABOUR SAVINGS

Fast. Efficient. **Innovative.**

Where can Rapid Saddle be installed?

Internal & External Installations

As stated within our Conlok® range, corrosion resistance is of paramount importance to the contractor when it comes to external installations.

Our external use Rapid Saddle® features a brand-new coating for the industry; Delta Protekt® 120. Initially designed for offshore wind turbines before finding popularity within the automotive sector, the Delta Protekt finish offers all the benefits of Hot Dip Galvanising, all within a thinner surface coating.

Due to the unique hinge design of Rapid Saddle, the more traditional HDG finish was too thick and rendered the product unusable. Delta Protekt therefore was the perfect solution and has been salt spray tested to 500+ hours for very high longevity of life.

Clean Rooms

When it comes to internal installations, the requirement for high corrosion-resistance is often much reduced if present at all.

Our internal use Rapid Saddles are designed to offer users all of the same benefits as the external version, however feature a more familiar Bright Zinc Plated (BZP) finish.

With a clean aesthetic and the same deep 5mm base, internal Rapid Saddles are an ideal fast-fix solution for uneven internal walls and when working at heights.

Key technical information

Conforms to BS EN 61386-1:2008+A1:2019 (Conduit Systems for Cable Management)	Manufactured to comply with BS EN 61386-25:2011 (Conduit Systems for Cable Management)	Manufactured from pressed steel
Deep 5mm base designed to offer the same stand off as traditional distance saddles	Each unit is supplied requiring only a quarter turn to secure	Clean Room option also available

Load test results

Lateral Load Test

A length of steel conduit tube was secured using two Rapid Saddle®s and weight applied in increments as detailed within BSEN61386-1:2008+A1:2019 to Class 4.

Vertical test
20mm / 25mm

Test requirements:
4kg / 8kg

Slight deformation:
28kg / 28kg

Load when test was stopped:
133.6kg / 133.6kg

Note: Test was stopped before product failed

Horizontal test
20mm / 25mm

Test requirements:
4kg / 8kg

Slight deformation:
38kg / 28kg

Load when test was stopped:
101.5kg / 90kg

Results for both tests = **PASS**

Axial (Slip) Load Test

A length of steel conduit tube was secured using a single Rapid Saddle and weight applied in increments as detailed within BSEN 61386-1:2008+A1:2019 to Class 4.

Vertical test
20mm / 25mm

Test requirements:
No weight limit advised

Slippage began at:
7kg / 10.25kg

Result = **N/A (manufacturer specified)**

ROLLATRAY®



A unique new product designed to dramatically increase installation speeds and reduce downtime in underfloor applications.

Key features & benefits



No couplers or brackets
Easily installed anywhere with a solid surface



15 seconds for full roll out
Available in 3 widths; 150mm, 300mm, 450mm

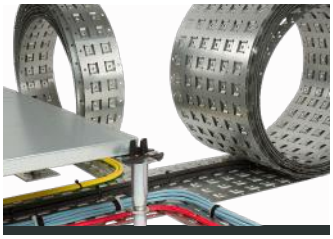

Flexible fixing arrangement
With Rollatray's innovative raised nipples & snail thread



Simple bends, tees & 4-ways
Crossover Rollatray units & secure with an M6 screw

Where you can find Rollatray®

Olympic Park Redevelopment, London

Major Data Centre, Dublin

Skypark Fit Out, Glasgow

How it works



ROLL



SECURE



DONE

Rollatray

Size	Code	Pack
150mm x 15mtr	RT150	1
300mm x 15mtr	RT300	1
450mm x 15mtr	RT450	11

Rollatray Cutter

Size	Code	Pack
-	RTCUTTER	1

+44 (0) 121 552 2100 | sales@metpro.co.uk | Order Online at metpro.co.uk

UP TO
90% LABOUR SAVINGS

Sometimes,
speed is everything.

Where can Rollatray be installed?

Internal & Installations

Manufactured from pre-galvanised sheet steel, Rollatray® is perfectly suited to internal applications where large cable runs are required.

Featuring a dry to touch oil applied to cut areas of the material, Rollatray® features suitable corrosion resistant properties for installations within commercial buildings, riser mains, multi-storey buildings and factory/automation lines to name some examples.

Clean Rooms

Manufactured from the same material as our internal finish option, Clean Room Rollatray® features our purpose-designed specialist coating for high hygiene and clean room environments

Designed to offer the same protective benefits as Clean Room Conlok® and Rapid Saddle®, this finish ensures the prevention of potentially harmful zinc whiskers making Clean Room Rollatray® an ideal solution for data centres, hospitals and other similar applications.

Key technical information

- Manufactured to BSEN10346 :2009 in line with standard cable tray
- Meets the earthing requirements of BSEN61537:2007
- Manufactured from 0.8mm medium duty pre-galvanised steel
- Easily cut to size using a guillotine with no hot works permits required
- Fixed to a structure simply using tapcon screws or a Pulsa nail gun
- No material memory means Rollatray® lies flat once uncoiled, ready for installation

Rollatray® weights & handling recommendations



RT150 | 150mm x 15mtr

Weight per coil: **11.7**kg

Recommended handling:





RT300 | 300mm x 15mtr

Weight per coil: **23.2**kg

Recommended handling:



or





RT450 | 450mm x 15mtr

Weight per coil: **34.9**g

Recommended handling:



or



TRUNKLIP® & TRAYKLIP®



Trunklip® & Trayklip® offer a brand new and much quicker solution for securing steel channel to trunking and cable tray.

Key features & benefits



Secures trunking & tray
Quickly & efficiently every time

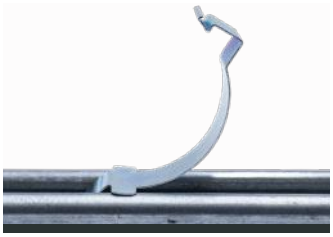

Greater on-site safety
No need for drills or spring nuts, just locate & *klip*

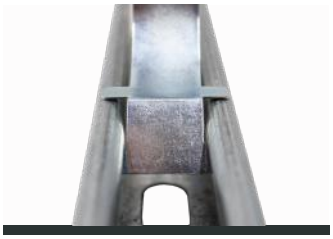

Innovative H-frame design
Product sits within channel for easy positioning



Clean & tidy finish
Trunklip allows for trunking lids to be fixed securely

How it works

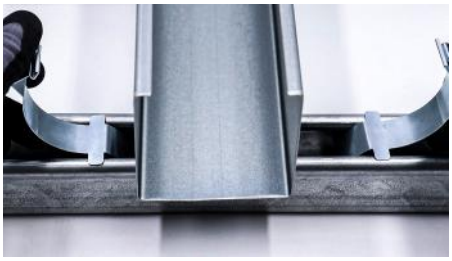



LOCATE





KLIP





DONE

Trunklip

Size	Code	Pack
2"	TK2K	50
3"	TK3K	50
4"	TK4K	50

Trayklip

To Suit	Code	Pack
Medium Return Tray	MCTMK	100
Heavy Return Tray	MCTHK	100

OVER
70% LABOUR SAVINGS

No drills, bolts or nuts;
makes sense.

Where can Trunklip & Trayklip be installed?

Trunklip

Manufactured from spring steel and featuring a BZP finish, Trunklip® is suited to interior applications only.

With trunking almost exclusively installed within buildings, the risk of Trunklip® being exposed to the elements and potential rusting or failure is therefore extremely minimal.

Trayklip

Manufactured from spring steel, Trayklip® features a Delta RoHS zinc flake finish, designed for both internal and external applications.

Our Delta RoHS Trayklip®'s are manufactured for all weather, minimising the risk of failure and ensuring the product is fit-for-purpose for many years to come.

Key technical information

Manunfactured from 65mm spring steel	Designed to ensure functionality with most UK brands	**Trunklip:** Features a Bright Zinc Plated finish	**Trunklip:** Available sizes: 2" | 3" | 4" (to suit 50mm, 75mm, 100mm trunking respectively)	**Trayklip:** Features a Delta RoHS zinc flake finish	**Trayklip:** Available in sizes to suit both medium tray returns and heavy tray returns

Load test results

Slip Load Test

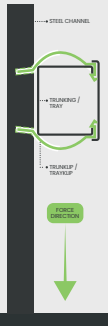

Trunklip SWL's		
TK2K (2")	TK3K (3")	TK4K (4")
9.00kg	8.00kg	7.00kg

Trayklip SWL's	
MCTMK (Medium)	MCTHK (Heavy)
9.00kg	9.00kg

Pull Out Load Test

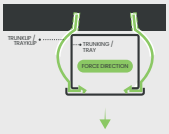

Trunklip SWL's		
TK2K (2")	TK3K (3")	TK4K (4")
63.33kg	43.67kg	45.00kg

Trayklip SWL's	
MCTMK (Medium)	MCTHK (Heavy)
26.67kg	16.67kg

EASYFIT CHANNEL NUTS

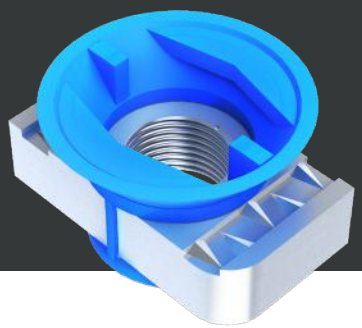

A unique steel channel nut designed to offer faster, safer installations.

Key features & benefits



One-handed installations
Built-in finger grips designed for simple installations



Slide & hold design
Easyfit's nylon jacket allows for easy positioning



No springs to untangle
Enhancing on-site safety, especially when at height



Compliant to BS6946:1988
In line with standard channel nuts

How it works

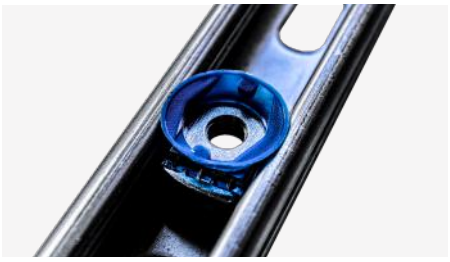



INSERT



TWIST





DONE

Easyfit Channel Nuts

Size	Code	Pack
M6	EF6	100
M8	EF8	100
M10	EF10	100
M12	EF12	100

OVER
60% LABOUR SAVINGS

Channel nuts, **with a twist.**

Where can Easyfit Channel Nuts be installed?

Internal Installations

Featuring a Bright Zinc Plated (BZP) finish across the range, Easyfit Channel Nuts are designed for internal use.

External installations solution
Should there be a requirement however for this product in an external application, we can supply a Hot Dip Galvanised version on request which will be subject to slightly longer leadtimes.

Key technical information

Manufactured to comply with BS6946:1988

Manufactured from:
Steel (Nut)
Nylon 6 (jacket)

Steel nut features a BZP finish

Requires only a 90° turn to secure within channel lengths

Load test results

SKU	Size	Slip SWL (kN)	Pull Out SWL (kN)
EF6	M6	0.7	4.9
EF8	M8	1.3	5.4
EF10	M10	1.7	7.0
EF12	M12	3.5	8.9

All loading data is based on using Metpro 2.5mm heavy gauge steel channel, and applying a Safe Working Load factor of 3.

Colour-coded for easy identification

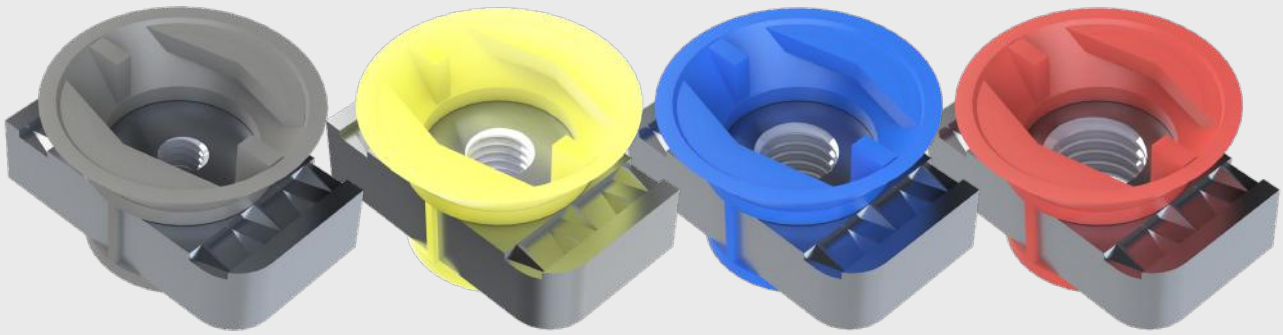

M6 M8 M10 M12

Metpro Ltd
Units 8 & 9
The Woods Bank Trading Estate
Wednesbury
WS10 7SU

+44 (0) 121 552 2100
sales@metpro.co.uk
metpro.co.uk

Connect with us:
metproltd
@metproltd
@metproltd

Always quality since 1995

© 2026 Metpro Limited