HANDLES INC.



EURO DOUBLE CYLINDER (65mm)

TECHNICAL DATA SHEET



EURO

DOUBLE CYLINDER (65mm)

Overview:
Solid brass euro double cylinder, key operated from both sides. Fits standard mortice locks. Includes 3 keys.

Base Material:
Solid Brass

Dimensions:
Length: 65mm / W17mm x H33mm

Finish:

SKU: CH-DBLE65-WHT, CH-DBLE65-SN, CH-DBLE65-SB, CH-DBLE65-BB, CH-DBLE65-TI, CH-DBLE65-BLK

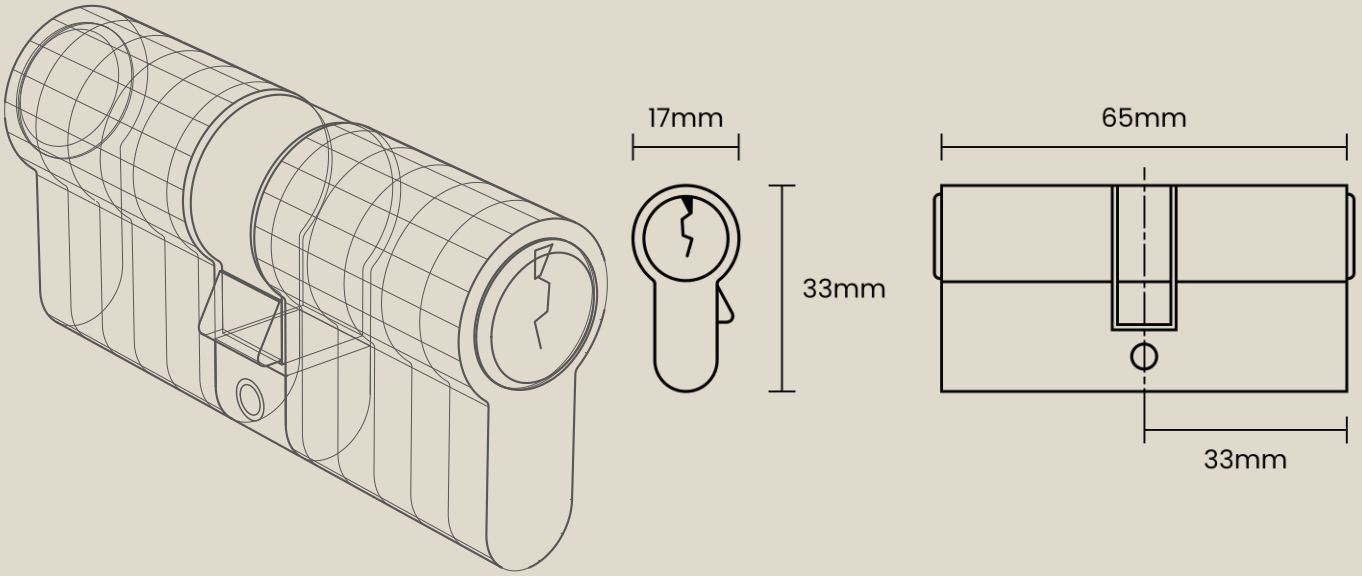

DIMENSIONS