We do COLOUR!



trendi









/TrendiSwitch

@Trendiswitch

Tel: +44 (0)203 5899 520

www.trendiswitch.com

sales@trendiswitch.com



Scan here to browse on
www.trendiswitch.com

Contents

Trendi - Our Story 2
Our Mission Statement 3
Our Core Colours 4
The Colours 5

OUR RANGE

Single Plate Switch 6
Double Plate Switch 7
Sockets 8
2&4 Port USB Sockets 9
Sockets with USB 10-11
Single Dimmer 12
Double Dimmer 13
Neon Options 14
Intermediate 15

PRODUCT SPECIFICATIONS 16-17

OUR COLOURS

Piano Black 18
Ice White 19
Platinum Silver 20
Champagne Gold 21
Light Grey 22
Strawberry 23
Bright Teal 24
Plum 25
Charcoal 26
Orange 27
Dark Green 28
Pink 29
Cool Grey 30
Moss Green 31
Dark Brown 32
Navy 33
Midnight Blue 34
Sky 35
Warm Grey 36
Copper 37
Ocean Blue 38
Brushed Steel 39
Matt Black 40
Carbon Fibre 41

trendiswitch©

OUR STORY

Many ideas and concepts start with a problem. Well, Trendi is no different.

Problem: Wiring accessories have become dated. Simple.

It was mused that existing offerings of switches and sockets needed a drastic and radical update. With this seed now firmly planted, 2015 became the year Trendi Switch was born.

From the early beginnings in a small office space the concept was created, fashioned, designed, marketed, and finally released.

The development was released in small batches to the local area gained traction and soon flourished. The Southeast soon became London. London soon became the Midlands. Soon Trendi gathered attention further afield until the furthest regions of the UK are now covered. The fun does not stop there. We are proud to be represented in over 25 Countries with more joining the Trendi journey.

Our biggest mission has always been to make other people as passionate about wiring accessories as we are and not to settle for the 'norm'. To date, this is still our biggest mission.

www.trendiswitch.com



OUR MISSION STATEMENT

Our objective for the wiring accessories market is to bring a design led functional product to the worldwide market place that is similar in price to historical dated and ugly wiring accessories, such as your 'conventional' light switch and plug socket.

The historical light switch & socket has been similar in design for many years, until now. Welcome to Trendiswitch®, with the functionality you would expect from a normal rocker light switch & electrical plug socket, it's a designed tactile product and pleasing on the eye.

Project renovations, new builds, refurbishments, hotels, care homes, hospitals, residential and commercial all require lighting controls to create the functionality of the wiring circuit. The light switch can often be an afterthought, but it is constantly used and at eye level, therefore an opportunity for Trendiswitch® to create the perfect finishing touch to your room design (#definedbydesign).

Here at Trendi we recognise the requirement for product development and whilst we are revolutionising wiring design, we are keen to develop our products whilst keeping the distinctive lines. I'm sure once you have one Trendiswitch®, you will want them all. Trendi Bespoke offers a rainbow of colours and design variations.



OUR CORE COLOURS

All the colours come in a range of plates, including sockets, switches, dimmers, cooker switches and blanking plates.

We offer a bespoke range, which means you'll be sure to find exactly what you're looking for to compliment your home or even your workspace.

THE COLOURS

Have you ever considered why you feel more relaxed after spending time in a neutral, light space? Or energised after being in a colourful, vibrant room? It's probably largely down to colour psychology.

Before you start your interior journey, it is important to ask yourself some key questions. What activity will happen in the space and who are the users? A relaxing dining space ready for inviting friends over? How about champagne gold? A vibrant but calming tone for the playroom? Consider the sky range.

With twenty-four colour options across the range, Trendiswitch is ready to help you realise your interior perfection.



SINGLE PLATE LIGHT SWITCH

1, 2, 3 & 4 Gang Rocker



- Easy to install Switch (Simply replace old switch no additional wiring required).
- Fireproof ABS Plastic module casing and face plate.
- High quality plastic face plate, which will not fade in direct sunlight or scratch easily,
- Easy clean product, allowing you to keep it looking as good as new.
- 5 year manufacturers guarantee.









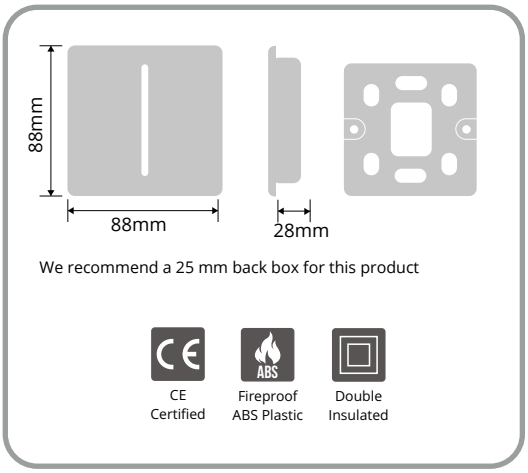

www.trendiswitch.com

DOUBLE PLATE LIGHT SWITCH

4, 6 & 8 Gang Rocker



- Easy to install Switch (Simply replace old switch no additional wiring required).
- Fireproof ABS Plastic module casing and face plate.
- High quality plastic face plate, which will not fade in direct sunlight or scratch easily,
- Easy clean product, allowing you to keep it looking as good as new.
- 5 year manufacturers guarantee.

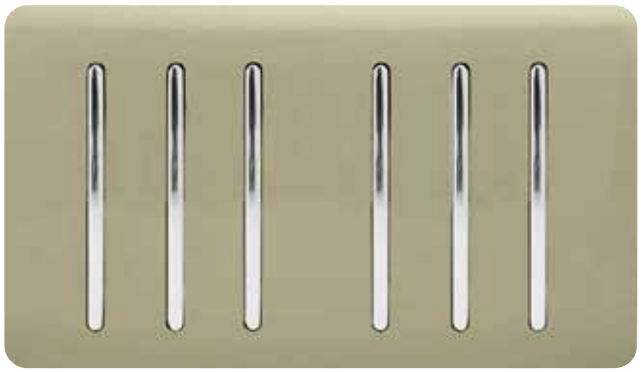



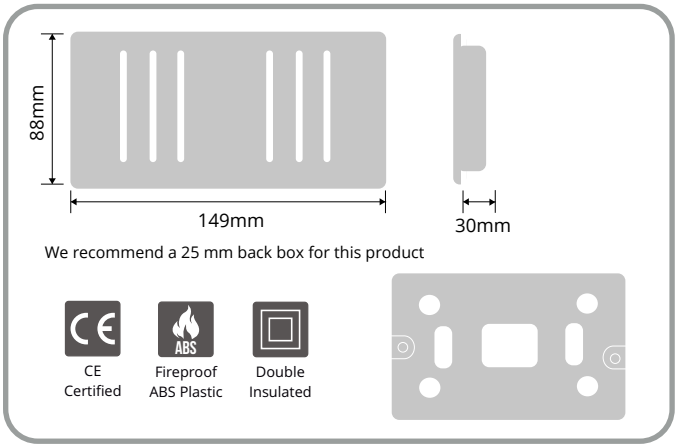

SOCKETS

1 Gang 13 amp
2 Gang 13 amp

- Easy to install Socket (Simply replace old socket no additional wiring required).
- Fireproof ABS Plastic module casing and face plate.
- High quality plastic face plate, which will not fade in direct sunlight or scratch easily,
- Easy clean product, allowing you to keep it looking as good as new.
- 5 year manufacturers guarantee.







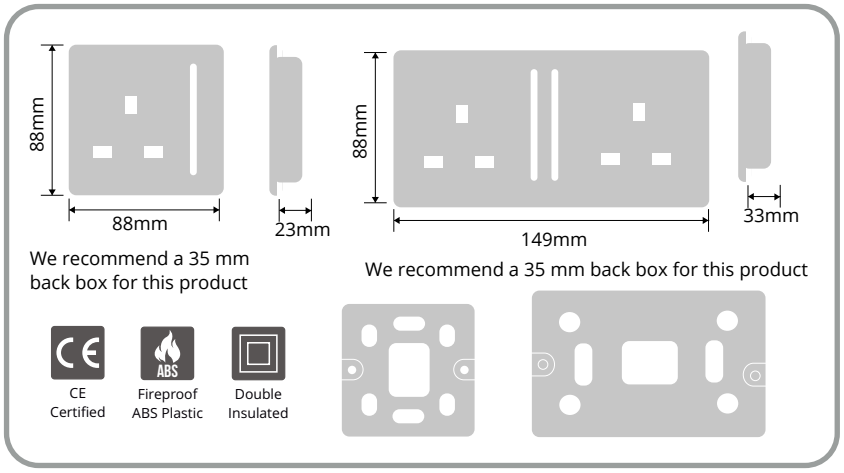

2 & 4 PORT USB SOCKETS

1 Gang 13 amp
2 Gang 13 amp

Trendi Switch 1 and 2 Gang 13 Amp USB Sockets. These short switched versions of the original Trendi Switch sockets have been given an upgrade of 2 and 4 new USB charging points. These will charge at a steady flow of 2.1MA, giving you that extra boost on your device.

Single socket has 2 ports.





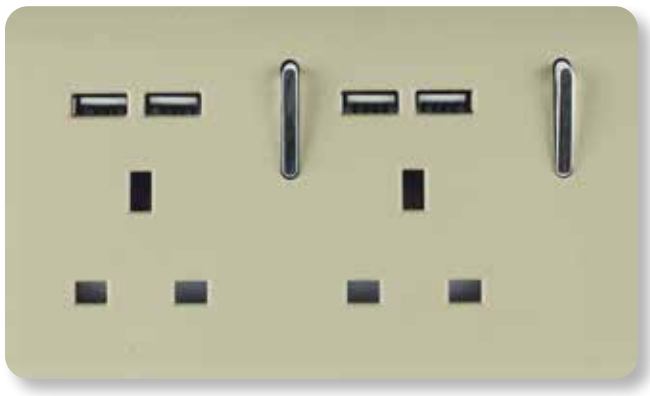

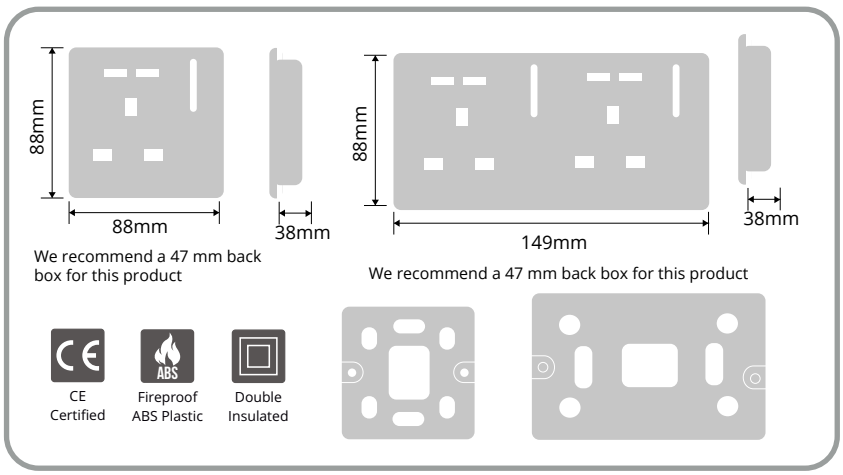

SOCKETS WITH USB

2 Gang 13 amp
2.1mA
3.1mA



These short switched versions of the original Trendi Switch sockets have been given an upgrade with the inclusion of 2x USB A charging points. These will charge at a steady flow of 2.1mA or 3.1mA, giving you that quick energy boost to your devices.

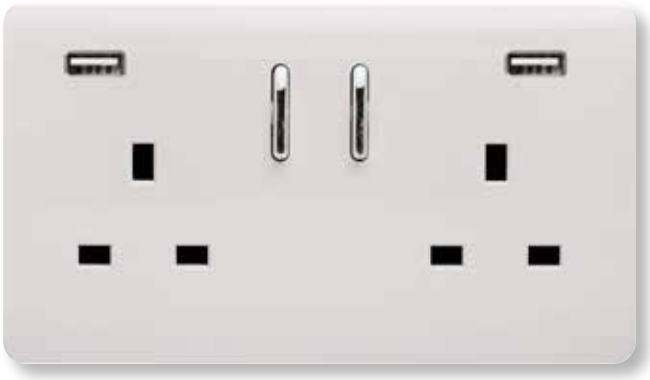

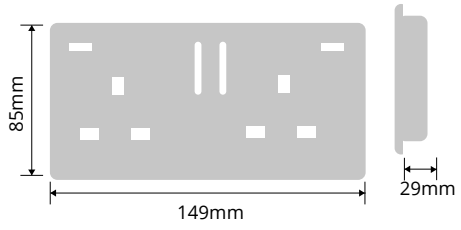

We recommend a 35 mm back box for this product

CE Certified

ABS Fireproof ABS Plastic

Double Insulated

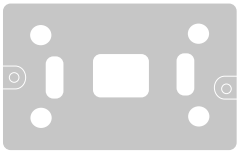

www.trendiswitch.com

SOCKETS WITH USB

2 Gang 13 amp 4.8mA

Super Fast Charge + Type C integration



These short switched versions of the original Trendi Switch sockets have been given an upgrade with the inclusion of 1x USB A & 1x C charging points. These will charge at a steady flow of 4.8mA, giving you that faster energy boost to your devices.

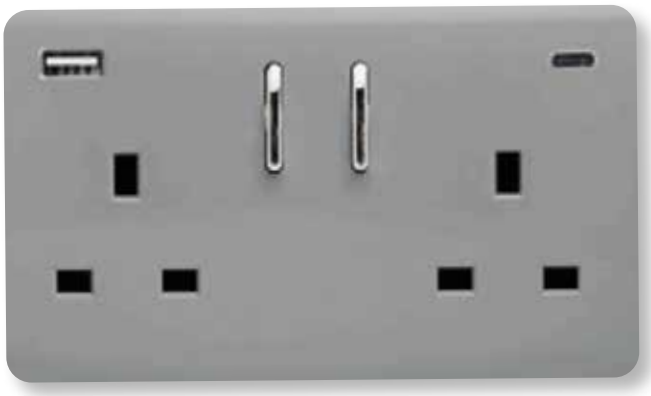

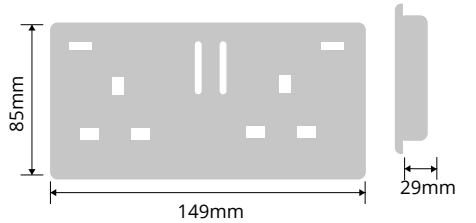

We recommend a 35 mm back box for this product

CE Certified

Fireproof ABS Plastic

Double Insulated

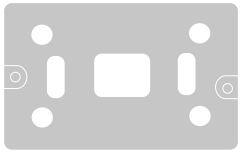

SINGLE LED DIMMER



- Minimum box depth 35mm
- Operating Voltage: 220/240V AC
- Max Current Rating: 1.3A
- Intended Applications: indoor Use Only. Domestric lighting circuits.
- Applicable Safety Standard: BE EN 60669-2-1
- Safety Advice: Not suitable for use with non-dimmable fluorescent bulbs and tubes, wire-wound or toroidal transformers or electric motors. Do not overload.



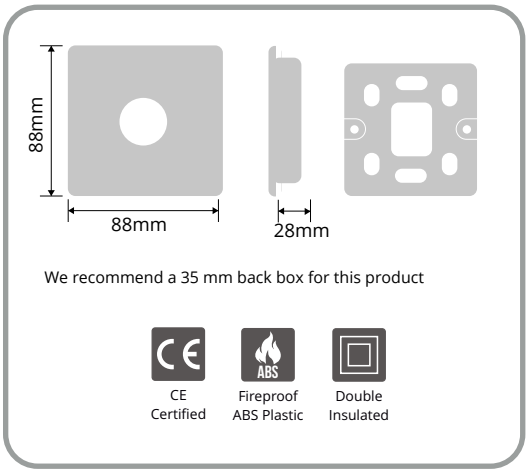

www.trendiswitch.com

DOUBLE LED DIMMER



- Operating Voltage: 220/240V AC
- Max Current Rating: 1.3A
- Intended Applications: indoor Use Only. Domestric lighting circuits.
- Applicable Safety Standard: BE EN 60669-2-1
- Safety Advice: Not suitable for use with non-dimmable fluorescent bulbs and tubes, wire-wound or toroidal transformers or electric motors. Do not overload.



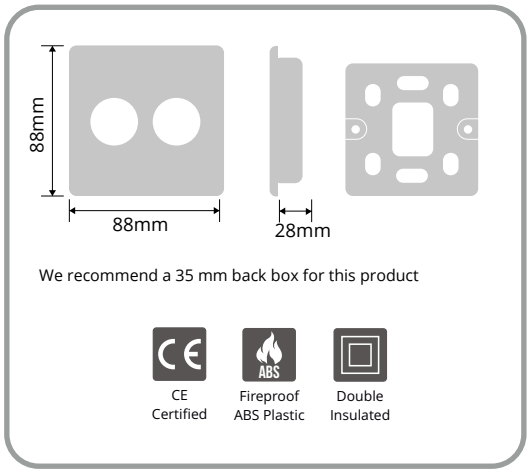

NEON OPTIONS

45 amp cooker with socket including neon

Light switch with neon 20 amp

Light switch with neon 45 amp



- Operating Voltage: 220/240V AC
- Max Current Rating: 1.3A
- Applicable Safety Standard: BE EN 60669-2-1
- For use to control higher Amp rated devices such as Electric Cookers





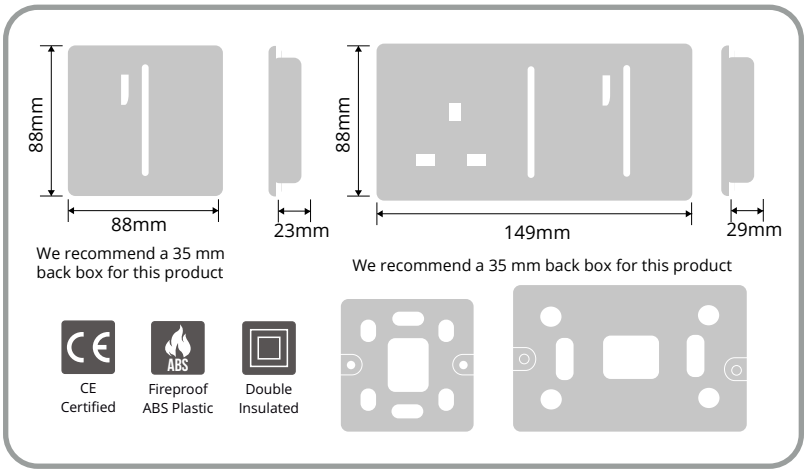

www.trendiswitch.com

INTERMEDIATE



1 gang 3 way intermediate

2 gang 2 way & intermediate

2 gang 3 way intermediate

4 gang 2 way & 1x intermediate

4 gang 2 way 2x intermediate

4 gang 2 way 3x intermediate

4 gang 3 intermediate

- Operating Voltage: 220/240V AC
- Max Current Rating: 1.3A
- Applicable Safety Standard: BE EN 60669-2-1



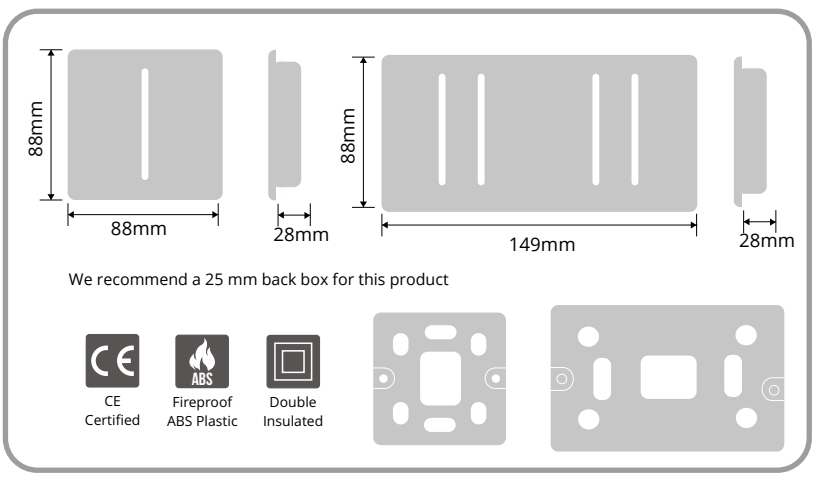



PRODUCT SPECIFICATIONS

Item code	Model	Dimensions (H) x (W)x (D)	Guarantee	Weight	All colours available
ART-SS2**	1 Gang 2 Way Light Switch	88mm x 88mm x 28mm	5 Years	75g	Yes
ART-SS4**	2 Gang 2 Way Light Switch	88mm x 88mm x 28mm	5 Years	90g	Yes
ART-SS6**	3 Gang 2 Way Light Switch	88mm x 88mm x 30mm	5 Years	105g	Yes
ART-SS8**	4 Gang 2 Way Light Switch	88mm x 88mm x 30mm	5 Years	120g	Yes
ART-SS44**	4 Gang 2 Way Light Switch (Twin)	88mm x 149mm x 28mm	5 Years	160g	Yes
ART-SS66**	6 Gang 2 Way Light Switch	88mm x 149mm x 30mm	5 Years	185g	Yes
ART-SS88**	8 Gang 2 Way Light Switch	88mm x 149mm x30mm	5 Years	240g	Yes
ART-SS9**	1 Gang Intermediate	88mm x 88mm x 28mm	5 Years	75g	Yes
ART-SS29**	2 Gang (1x 2 Way 1x 3 Way) Intermediate	88mm x 88mm x 28mm	5 Years	90g	Yes
ART-SS99**	2 Gang Intermediate	88mm x 88mm x 28mm	5 Years	90g	Yes
ART-SS2229**	4 Gang (3x 2 Way 1x 3 Way Intermediate Twin Plate)	88mm x 149mm x 30mm	5 Years	160g	Yes
ART-SS2299**	4 Gang (2x 2 Way 2x 3 Way Intermediate Twin Plate)	88mm x 149mm x 28mm	5 Years	160g	Yes
ART-SS2999**	4 Gang (1x 2 Way 3x 3 Way Intermediate Twin Plate)	88mm x 149mm x 28mm	5 Years	160g	Yes
ART-SS9999**	4 Gang 4x 3 Way Intermediate (Twin Plate)	88mm x 149mm x 28mm	5 Years	160g	Yes
ART-DB**	1 Gang Doorbell	88mm x 88mm x 28mm	5 Years	75g	Yes
ART-2DB**	2 Gang Doorbell	88mm x 88mm x 28mm	5 Years	90g	Yes
ART-SSR1**	1 Gang Home Automation Switch	88mm x 88mm x 28mm	5 Years	75g	Yes
ART-SSR2**	2 Gang Home Automation Switch	88mm x 88mm x 28mm	5 Years	90g	Yes
ART-LDM**	1 Gang 1 or 2 Ways	88mm x 88mm x 28mm	5 Years	105g	Yes
ART-2LDM**	2 Gang 1 or 2 Way LED Dimmer	88mm x 88mm x 28mm	5 Years	140g	Yes
ART-SKT13**	1 Gang Plug Socket	88 mm x 88mm x 23mm	5 Years	100g	Yes
ART-SKT13USB**	1 Gang 13 amp Switched Single Socket USB	88mm x 88mm x 38mm	5 Years	125g	Yes
ART-SKT213L**	2 Gang Socket	88mm x 149mm x 33mm	5 Years	165g	Yes

Item code	Model	Dimensions (H) x (W)x (D)	Guarantee	Weight	All colours available
ART-SKT 213USB**	2 Gang 13amp Switched Double Socket with 4x 2.1mAh USB	88mm x 149mm x 38mm	5 Years	195g	Yes
ART-SKT213 USB21AA**	2 Gang 13 amp short switched Plug USB 2x 2.1mA	88mm x 149mm x 29mm	5 Years	195g	Yes
SKT213 USB31AA**	2 Gang 13 amp short switched Plug USB 2x 2.1mA	88mm x 149mm x 29mm	5 Years	195g	Yes
ART-WHS1**	20 Amp Heavy Duty Rocker	88mm x 88mm x 23mm	5 Years	120g	Yes
ART-WHS2**	45 Amp Cooker Switch	88mm x 88mm x 23mm	5 Years	120g	Yes
ART-WHS213**	45 Amp Cooker & 13 Amp Socket	88mm x 149mm x 29mm	5 Years	190g	Yes
ART-FS**	Fused Spur	88mm x 88mm x 30mm	5 Years	105g	Yes
ART-TVS**	TV Socket	88mm x 88mm x 28mm	5 Years	85g	Yes
ART-TLP**	Telephone Socket	88mm x 88mm x 38mm	5 Years	70g	Yes
ART-PC**	PC Ethernet	88mm x 88mm x 38mm	5 Years	70g	Yes
ART-2PC**	2 Gang PC	88mm x 88mm x 38mm	5 Years	85g	Yes
ART-SAT**	TV Satellite outlet	88mm x 88mm x 28mm	5 Years	85g	Yes
ART-2SAT**	2 Gang Satellite	88mm x 88mm x 28mm	5 Years	90g	Yes
ART-2TVS**	2 Gang TV Coaxial	88mm x 88mm x 28mm	5 Years	105g	Yes
ART-2TLP**	2 Gang Telephone	88mm x 88mm x 28mm	5 Years	85g	Yes
ART-BLK**	Blanking Plate	88mm x 88mm x 10mm	5 Years	60g	Yes
ART-2BLK**	2 Gang Blanking	88mm x 149mm x 10mm	5 Years	90g	Yes
ART-TV+PC**	TV & PC Socket	88mm x 88mmx 38mm	5 Years	95g	Yes
ART-TLP+PC**	Telephone & Ethernet Socket	88mm x 88mm x 38mm	5 Years	95g	Yes
ART-TLP+TV**	Telephone & TV Socket	88 mm x 88mm x 38mm	5 Years	95g	Yes

** For our core colours, when ordering, add the code next to colour: Ice White - **WH** Piano Black - **BK** Platinum Silver - **SI** Champagne Gold - **GO**

For Bespoke / We do Colours, add the code next to colour:

- Copper - **CPR**
- Orange - **OR**
- Strawberry - **SB**
- Pink - **PK**
- Plum - **PL**
- Midnight Blue - **MD**
- Navy - **NV**
- Ocean Blue - **OB**
- Sky - **SK**
- Bright Teal - **BT**
- Dark green - **DG**
- Moss Green - **MG**
- Light Grey - **LG**
- Cool Grey - **CG**
- Warm Grey - **WG**
- Charcoal - **CH**
- Dark Brown - **DB**
- Matt Black – **MBK**
- Brushed Steel – **BS**
- Carbon Fibre - **CF**

PIANO BLACK

Black represents sophistication and elegance. This timeless Piano Black has a beautiful gloss finish will look classic in any room.







Hex #000000
RAL 9005

This colour complements

Black makes everything more elegant or classy.

ICE WHITE

The colour white sets the boundaries of your powerful colour scheme. Representing the cleanliness of your home. For many who choose simplicity over busyness will incorporate white elements, promoting feelings of tranquillity, peace and calmness. Shades of white can be used within many rooms including your main living space, your stylish kitchen or your relaxed dining area.





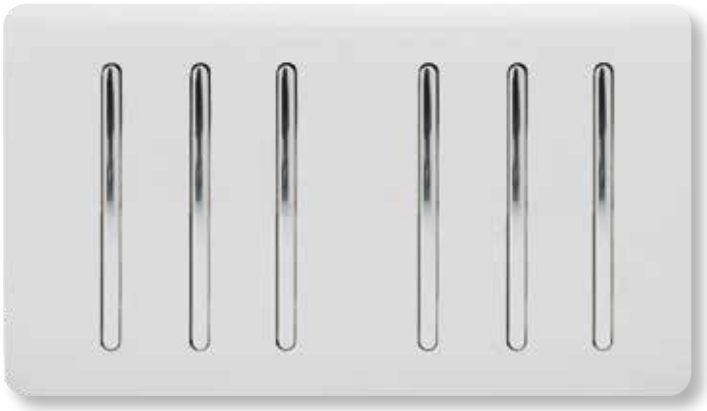

Hex #fffffe
RAL 9010

This colour complements

The colour white sets the boundaries of your powerful colour scheme.

PLATINUM SILVER

In Interior design Silver is most commonly used for its reflective qualities. Silver is loved for being glamorous and sophisticated and best used in modern surroundings. Tones of silver work alongside most other colours, illuminating and reflecting the warmth other shades bring in. When cooler silver undertones are paired with darker tones a modernistic feel will be created.







Hex #a8abab
RAL 7001

This colour complements

Silver is loved for being glamorous and sophisticated and best used in modern surroundings.

CHAMPAGNE GOLD



A decorative colour first and foremost, touches of gold will combine expression and extravagance. The champagne gold range is supremely flexible, a winning combination when paired with similarly sleek black and white shades. Gold hues will also look powerful when paired with dark, rich and deep tones such as plum or navy blue. Is it your turn to host dinner for friends? Be sure to know your champagne gold touch will be topic of conversation.



Hex #bdb298
RAL 1020

This colour complements

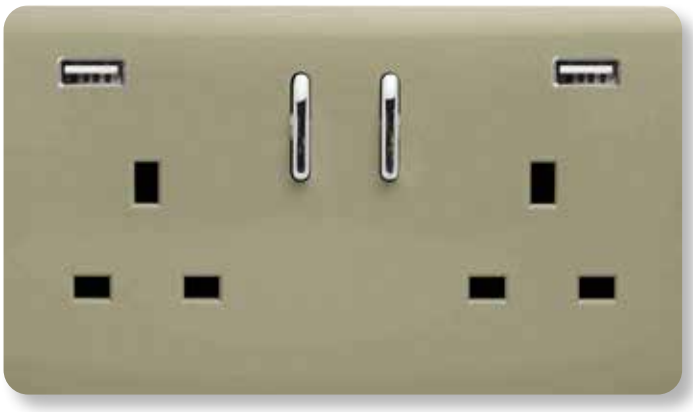

A decorative colour first and foremost, touches of gold will combine expression and extravagance.

LIGHT GREY

It is no secret even to interior novices that light grey has turned a fresh corner in recent times, establishing itself as a must have shade throughout the home. Having a light grey area is perfect for highlighting the other colours around. Interior designers are opting to use a light grey shade to provide a more noticeable alternative to the popular use of white within the living space. Whether your walls have a splash of colour or are retained neutral be confident that your light grey Trendiswitch draw you desired feel together.

Hex#9d9d9c
RAL 7004

This colour complements







Having a light grey area is perfect for highlighting the other colours around.

STRAWBERRY

A lighter red tone draws feelings of creativity from the colour pink, whilst encouraging feelings of ambition, action and willpower from red which are all qualities attributed to this colour. Using the strawberry range within the entrance to home will create a strong first impression. The colour red is a catalyst to energise a room (or the person in it). It has been said that the colour red can act as a reason to bring a room to life. It can also help to motivate and inspire someone.







Hex #c62f3f
RAL 3018

This colour complements

Using the strawberry range within the entrance to home will create a strong first impression.

BRIGHT TEAL

Teal is a combination of blue and green, two colours popular for the properties and feelings they present. Blue positively communicates feelings of tranquillity and calm, whilst green positively captures feelings of peace and balance. Teal is best used as the star of the room, placed against natural grey tones the sea like shade can quickly become a real talking point. Introduce a colour of uniqueness with calming qualities into your home today through your switches and sockets.

Hex #1ca9ad
RAL 5018

This colour complements







Teal is a combination of blue and green, two colours popular for the properties and feelings they present.

PLUM

In interior design, the colour purple is used to encourage a new perspective on your emotions with the Trendi plum shade perfect for introducing a sense of spiritual calm. Shades of purple are often associated with luxury, ambition and nature. Introduce Trendiswitch plum into your home and create your perfectly unique living space today.



Hex #4f2d44
RAL 4007

This colour complements







Shades of purple are often associated with luxury, ambition and nature.

CHARCOAL

The charcoal range by Trendiswitch is bold in colour, being a stylish alternative to black. Incorporate green and brown elements into your interior design to support the use of charcoal, two hues drawn from the colour. Charcoal is often used to add depth to a space, with bright kitchens a trend here to stay incorporate that charcoal tone to add dimension to your living space today.



Hex #535652
RAL 7043

This colour complements





Charcoal is often used to add depth to a space.

ORANGE

In interior design, colour psychology explains that orange expands your thinking and is a colour for laughter and celebration. Being in a room with doses of orange through your switches and sockets can help you to be more creative, to open up your mind and to be more artistic. It has been said that bringing orange into your decor can also help to reduce self-consciousness allowing you to truly be yourself.



Hex #ef6639
RAL 2008

This colour complements





Being in a room with doses of orange through your switches and sockets can help you to be more creative.

DARK GREEN

In interior design, green is currently the most powerful colour being versatile enough to pair with any accent colourful or neutral. Shades of green have a strong affiliation with nature and a fresh start. The perfect colour for a new renovation. Why wouldn't you base your interior palette around a shade that has natural uplifting and revitalisation characteristics within your home?



Hex #105241
RAL 6005

This colour complements





Shades of green have a strong affiliation with nature and a fresh start.

PINK

A colour that can unexpectedly transform a living space, whether used in subtle hints or bold statement splashes. The Trendiswitch pink range naturally combines itself with grey tones, bringing forward feelings of sophistication and elegance. Realise the versatile characteristics of pinks elegance and softness to elevate your use of pink from the bedroom to the main living space today.



Hex #d978a2
RAL 4003

This colour complements





A colour that can unexpectedly transform a living space, whether used in subtle hints or bold statement splashes.

COOL GREY

The Trendiswitch cool grey range works nicely to create a backdrop for stronger colours, taking the edge off them enough to stop them being too overbearing. A cool grey promotes a sense of calmness and relaxation within your interior, making it the perfect addition in making your home feel light and spacious.







Hex #95a1a6
RAL 7000

This colour complements

A cool grey promotes a sense of calmness and relaxation within your interior.

MOSS GREEN

Moss green is a shade that is naturally reassuring and relaxing whilst keeping us tied to the natural world. It is thought incorporating a soft green tone across your wall through your switches and sockets can introduce calming qualities. Whether you're looking to rejuvenate or restore your favourite living space, introduce the feeling of being connected to nature and feel more safe and secure within your relaxation area with the Trendiswitch moss green range.

Hex #909f6d
RAL 6025

This colour complements



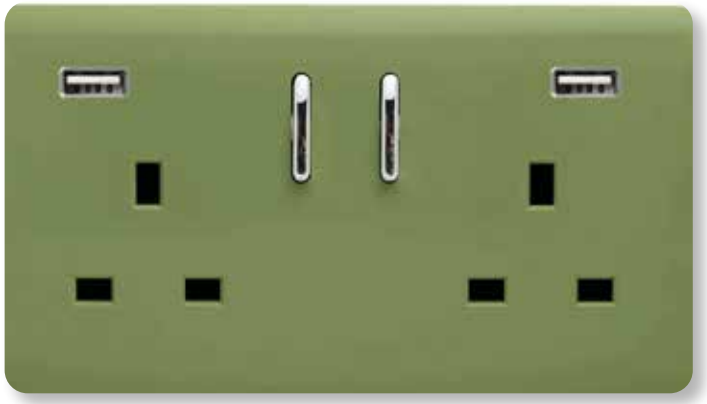



Moss green is a shade that is naturally reassuring and relaxing. A dark green colour with a tint of yellow, like that of moss.

DARK BROWN

Dark brown is said to offer properties of stability, protection, comfort and support. When the Trendiswitch dark brown is used within the home feelings of relaxation and warmth will be established. A colour that can be paired with green hues to create that ultra-nature feel, or paired with metallic gold and copper shades to set a tone of pure sophistication.



Hex #332e29
RAL 8019

This colour complements





A colour that can be paired with green hues to create natural and warm space.

NAVY

The use of navy blue is considered a great alternative to using black, similarly a statement shade but with properties to keep you calm and relaxed in your own space. A shade seen increasingly used within minimalistic interiors, often used as it is strong and vibrant and being able to stimulate the mind and spark creativity. The living room is the perfect place to introduce the contrasting properties of navy and white, paint one wall navy leaving the rest white then simply add your navy switches and sockets to create contrasting perfection within your home.

Hex #1d2536
RAL 5008

This colour complements







The living room is the perfect place introduce the contrasting properties of navy and white.

MIDNIGHT BLUE

In many cases without even being aware midnight blue tones can have a strong influence on our daily lives, with the shade able to inspire us, excite us and even set the tone for your evening of entertainment at home. Midnight blue is a popular colour due to the feelings of trust and commitment it mirrors. Introduce Trendiswitch midnight blue for a calming and serene effect within your living space.

Hex #0f4c65
RAL 5001

This colour complements







The midnight blue hue is considered a popular colour due to the feelings of trust and commitment that it mirrors.

SKY

Sky blue is popularly associated with imagination and inspiration. Light blue hues are delicate in comparison to darker shades offering a sense of gentleness within your living spaces. Elements of sky blue can be used to make a room feel more spacious and is frequently used as an alternative to white for this reason. Throughout the warmer weather introduce a sky faceplate to your switches and sockets to promote a feeling of fresh and cleanliness.

Hex #7d97af
RAL 5014

This colour complements





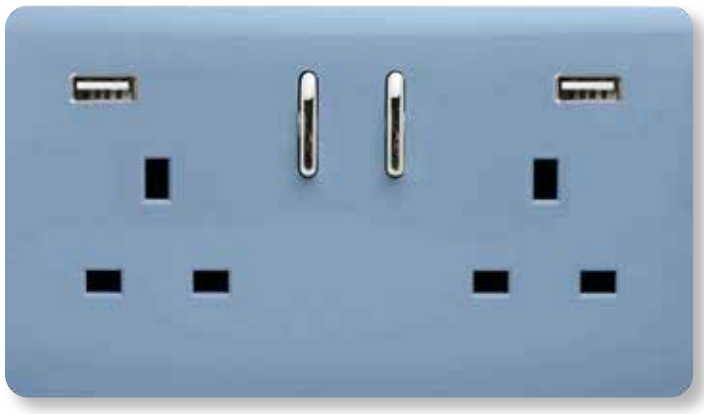

Sky blue is popularly associated with imagination and inspiration.

WARM GREY

Warm grey hues present a certain feeling of safety and security from the outside world, a colour that gives of a unique feeling of cosiness to your interior. For this reason interior designers will suggest that the warm grey shade is perfectly suited to the bedroom space, a place for natural hibernation. An injection of colour will optimistically support the contrasting darker shade of your switches and sockets.







Hex #767f85
RAL 7037

This colour complements

Warm grey hues present a certain feeling of safety and security from the outside world.

COPPER

Launched summer 2021 the Trendiswitch copper range has proven extremely popular within the interior designer profession. The Trendiswitch copper range can act as a main feature against many interior themes as a statement switch or socket. Its ability to juxtapose perfectly against black and white is perfect for smaller accents. Introduce copper switches and sockets into your home to create the perfect modern aesthetic.



Hex #f29772

This colour complements







Considered the perfect contrasting colour for your interior.

OCEAN BLUE

Ocean blue is a colour that encourages peace and tranquillity above everything else, promoting both physical and mental relaxation when enjoying your downtime. The ocean blue range is loved for being an extremely versatile shade whilst often being paired with your favourite tone of grey to create the perfect 'cool' interior. Inject a colour of dreaminess into your home today.

Hex #26647d
RAL 5009

This colour complements

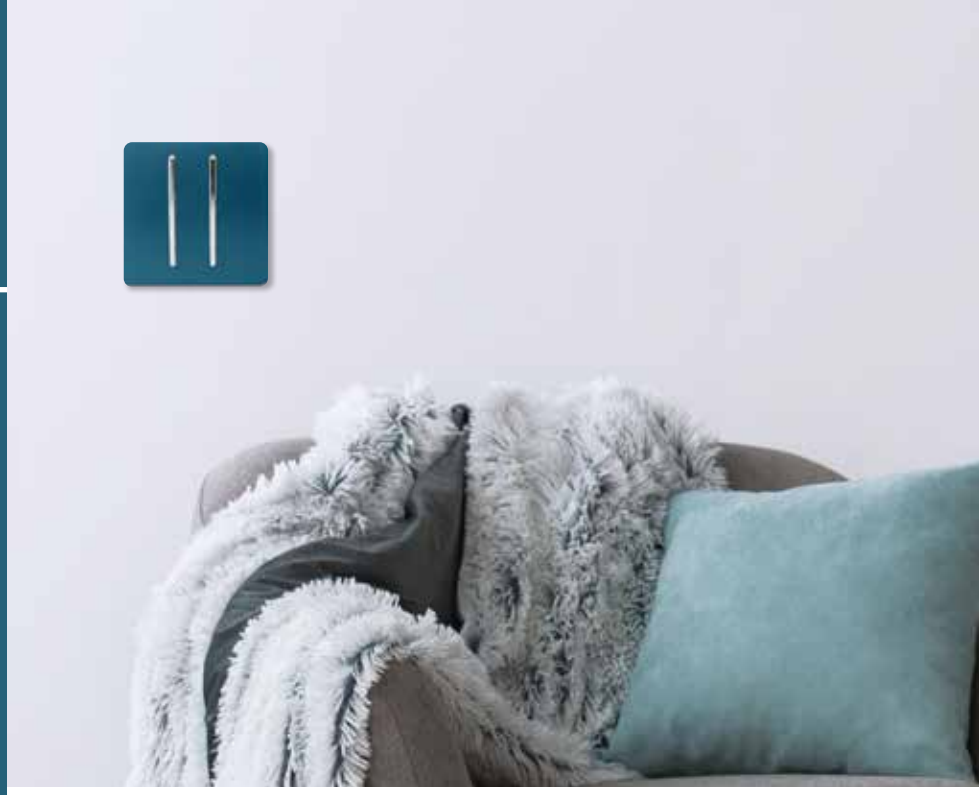



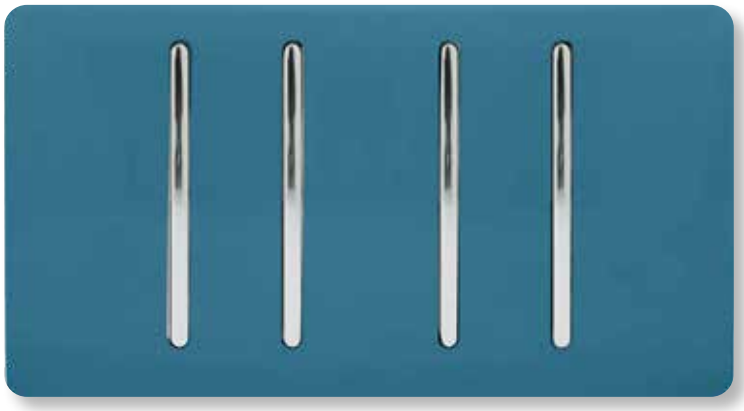

Ocean blue is a colour that encourages peace and tranquillity above everything else.

BRUSHED STEEL

Brushed steel is valued for its role in decoration due to its reflective brightness. The increasingly popular colour will always blend perfectly into your interior due to being close to grey in shade, naturally drawn from white and black. The staple colours to interior design. Stylishly decorate with your favourite kitchenware on display.



Hex #838483





This colour complements



Stylishly decorate with your favourite kitchenware on display.

MATT BLACK

Matt black is very bold in tone, but that is certainly not a bad thing. It is a colour that makes a very powerful and striking mark within the living space. Matt black is considered a modern design choice whilst deemed to work perfectly against traditional interiors too. Every living space is likely to include a black touch so make this staple your matt black light switch or socket by Trendiswitch. A shade with the qualities to add that classy touch to your interior.







Hex #28282B

This colour complements

Matt black is considered a modern design choice whilst deemed to work perfectly against transitional interiors too.

CARBON FIBRE

Carbon fibre also known as graphite fibre. We have created a “Trendi” representation of this popular material that normally consists of fibres composed of carbon atoms bonded together in crystals. However, you can now bring this unique look into your home for a fraction of the cost. Perfect for any car enthusiasts’ space and so much more.

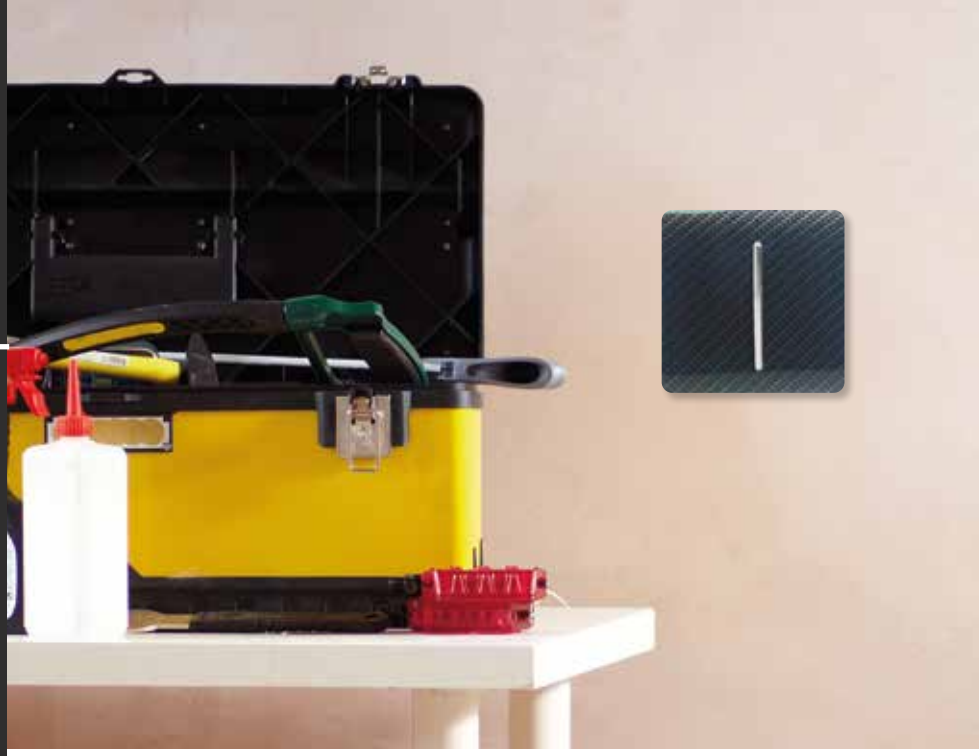

Hex#2e2e2e



This colour complements

Improvement usually means doing something that we have never done before.




trendi


trendi
CE





Notes



Notes



Trendiswitch Limited
PO Box 890, Forest Row, East Sussex, RH19 9LX, United Kingdom

/TrendiSwitch

@Trendiswitch

Tel: +44 (0)203 5899 520 **www.trendiswitch.com** **sales@trendiswitch.com**