Bailey Engineered Access & Lifting

COMPACT HANDLER



CH 2

Compact Handler

ENGINEERED ACCESS & LIFTING

One machine. Multiple jobs.

Attachments slide into the boom tip. The rated load limiter detects which attachment is installed and sets the load parameters itself.



Hook
1,950 lb



Forks
1,950 lb



Glass lifter
1,000 lb



Jib
900 lb



Man basket
500 lb



Winch
1,950 lb

Machine specifications.

Three-section boom, two telescoping. The hook adds a removable fourth stage.

1,950 lb
HOOK CAPACITY

10′ 9″
HOOK HORIZONTAL REACH
BOOM LEVEL, FULLY EXTENDED

20′
MAX HOOK HEIGHT · VERTICAL
BOOM AT 60°, FULLY EXTENDED

60°
MAX BOOM ANGLE
ABOVE HORIZONTAL

24 V
ALL ELECTRIC

1.75 mph
DRIVE SPEED, UP TO

SPECIFICATIONS

Boom	3 sections · 1 fixed, 2 telescoping
Hook horizontal reach	10′ 9″ · boom level, fully extended
Boom angle	−15° to 60° from horizontal
Power	24 V electric · 7 HP motor
Drive	Rear wheel · hydraulic motor
Drive speed	up to 1.75 mph (2.8 km/h)
Steering	Rear wheel · turns ±80° from straight ahead
Brakes	Spring applied · hydraulic release
Weight	4,300 lb

CONTROLS & SAFETY

Rated load limiter
Displays rated and actual load. Stops the lift at rated load.

Progressive function control
Slows drive with steering angle, boom reach and load.

Enhanced stability package
Option. Required for the man basket, and for forks above 12 ft vertical fork height.

Attachment auto-detect
Sets the load parameters for the attachment installed.

Radio remote and walkie handle
Proportional electric joysticks, 2-speed HI/LOW for slow, precise moves.

Hook

1,950 lb RATED CAPACITY

CH 2 · Hook

RAISE & EXTEND

BOOM **+22°**

EXTEND **0.0 ft**

The hook hangs plumb as the boom raises and extends



Hook
up to 1,950 lb

WATCH VIDEO · 0:19

Versatile lifting in tight corners.

HOOK

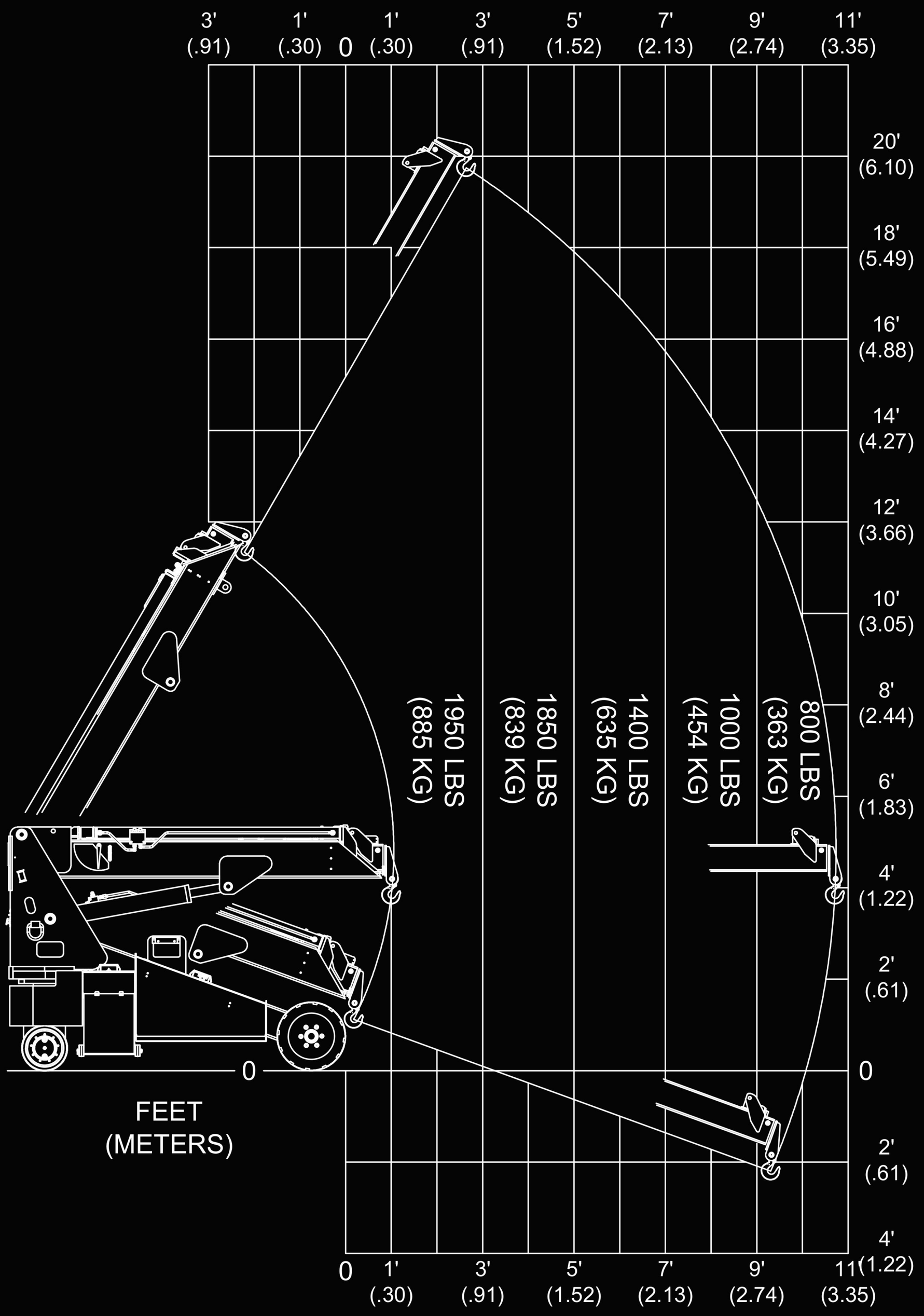

Rated capacity by horizontal reach (across, from the front of the tire) and vertical height (up). The rated load limiter shows the capacity at the current boom position.

Forks

1,950 lb RATED CAPACITY

CH 2 · Forks

AUTO-LEVEL

↑	BOOM	+22°
	EXTEND	0.0 ft
↓	TIP TO BOOM	−22°
	FORKS	0° · LEVEL

The power tip keeps the forks level as the boom moves



WATCH VIDEO · 0:19

Forks
up to 1,950 lb

Stability package required above 12 ft vertical fork height.

FORKS

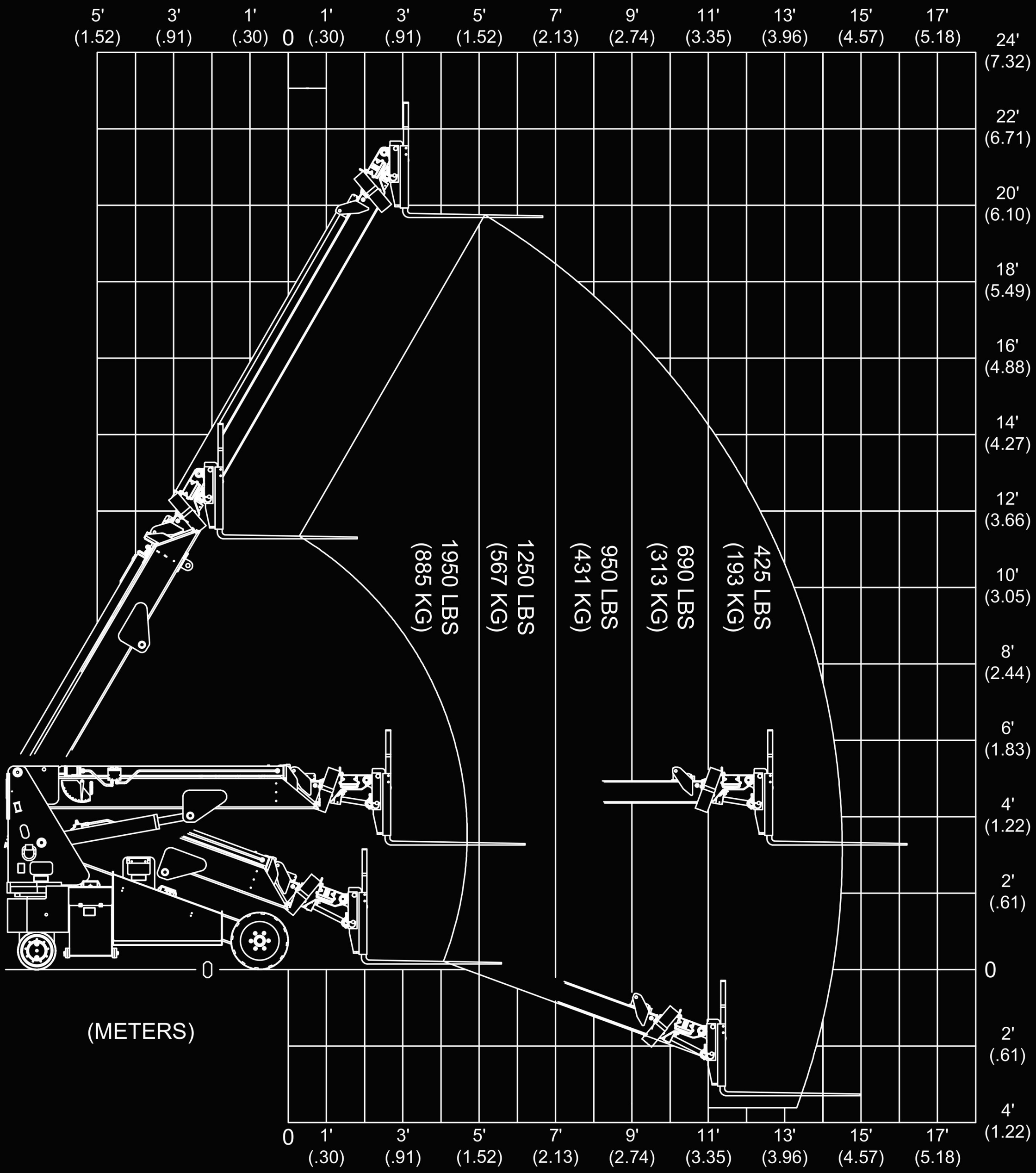

Rated capacity by horizontal reach (across, from the front of the tire) and vertical height (up). The rated load limiter shows the capacity at the current boom position.

For lifts above 12 ft vertical fork height, the stability package must be installed.

Glass lifter

1,000 lb RATED CAPACITY

CH 2 · Glass lifter

AUTO-LEVEL

↑ BOOM	+22°
EXTEND	0.0 ft
↓ TIP TO BOOM	−22°
GLASS	0° · LEVEL

The power tip keeps the glass level as the boom moves



WATCH VIDEO · 1:09

Glass lifter
up to 1,000 lb

3-axis manipulator: tilts the glass 90° up and 90° down, rotates it 90° left and right, and spins it 90° each way (180° total). Free-rotate valves for hand positioning.

GLASS LIFTER

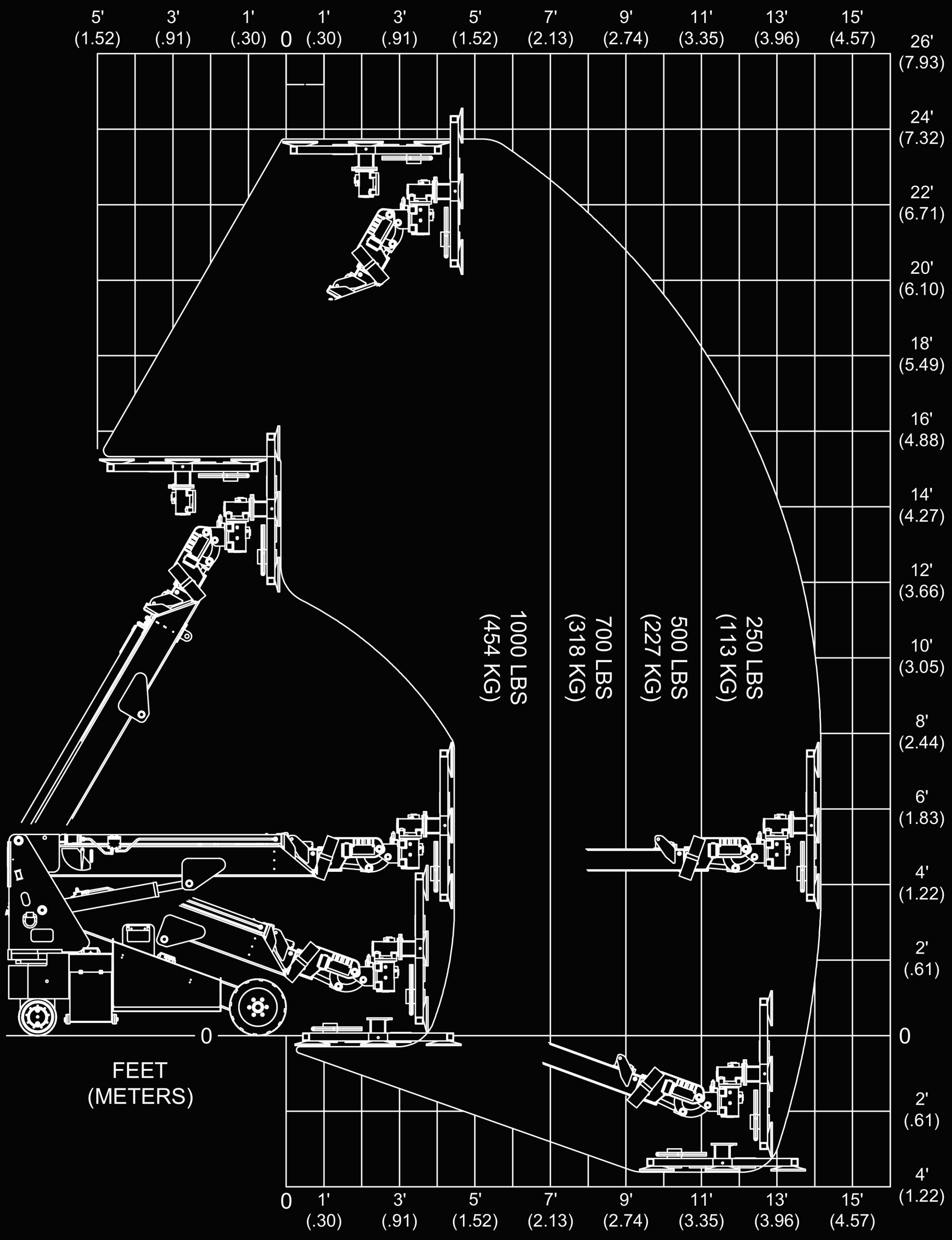

Rated capacity by horizontal reach (across, from the front of the tire) and vertical height (up). The rated load limiter shows the capacity at the current boom position.

Jib

900 lb RATED CAPACITY

CH 2 · Jib

AUTO-LEVEL

↑	BOOM	+22°
	EXTEND	0.0 ft
↓	TIP TO BOOM	−22°
	JIB	0° · LEVEL

The power tip keeps the jib level as the boom moves



WATCH VIDEO · 0:19

Jib
up to 900 lb

Mounts on the powered boom tip.

JIB

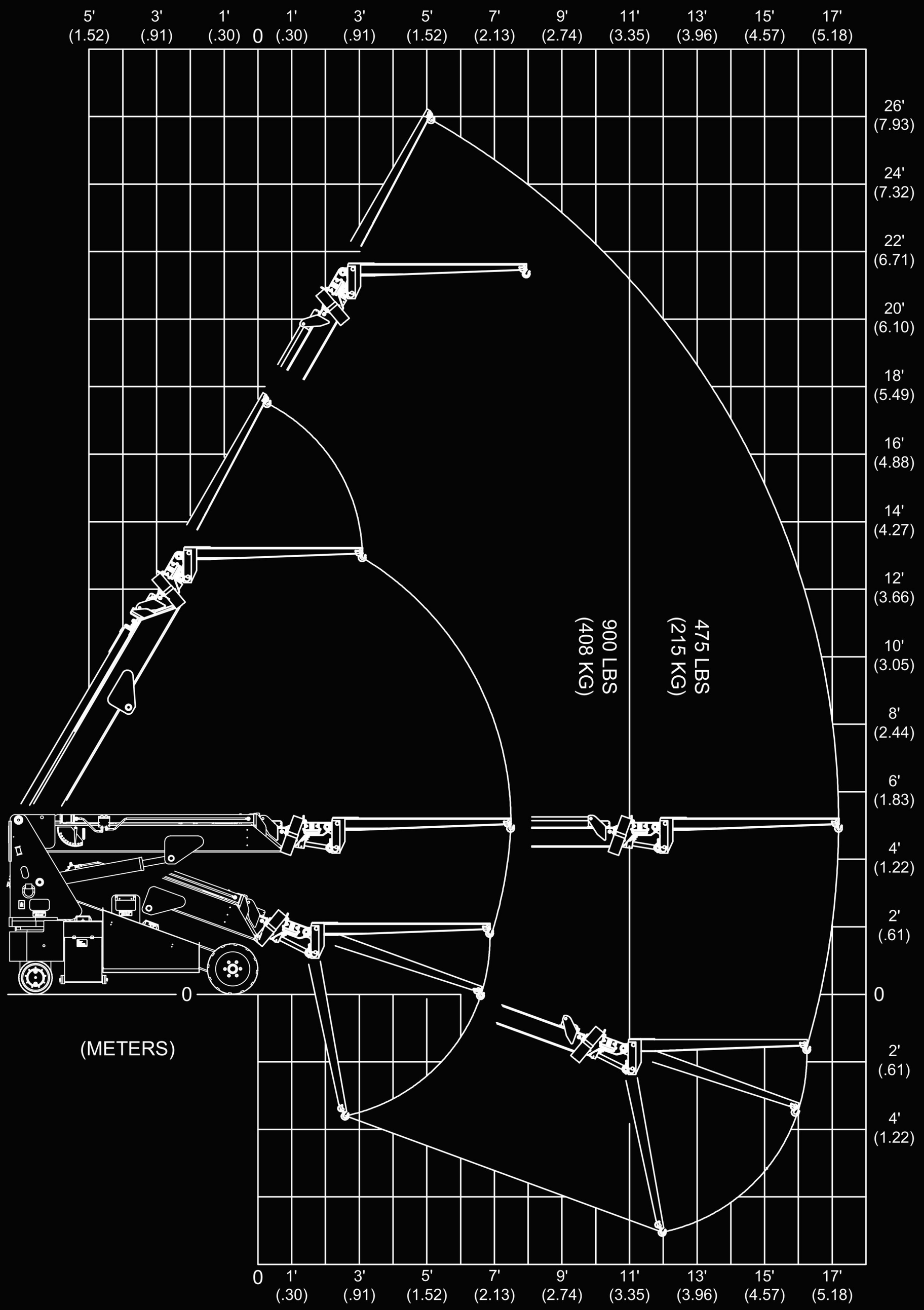

Rated capacity by horizontal reach (across, from the front of the tire) and vertical height (up). The rated load limiter shows the capacity at the current boom position.

Man basket

500 lb RATED CAPACITY

CH 2 · Man basket

AUTO-LEVEL

↑ BOOM	**+22°**
EXTEND	**0.0 ft**
↓ TIP TO BOOM	**–22°**
BASKET	**0° · LEVEL**

Basket stays level · enhanced stability package required



WATCH VIDEO · 0:19

Man basket
500 lb

Enhanced stability package required.

MAN BASKET

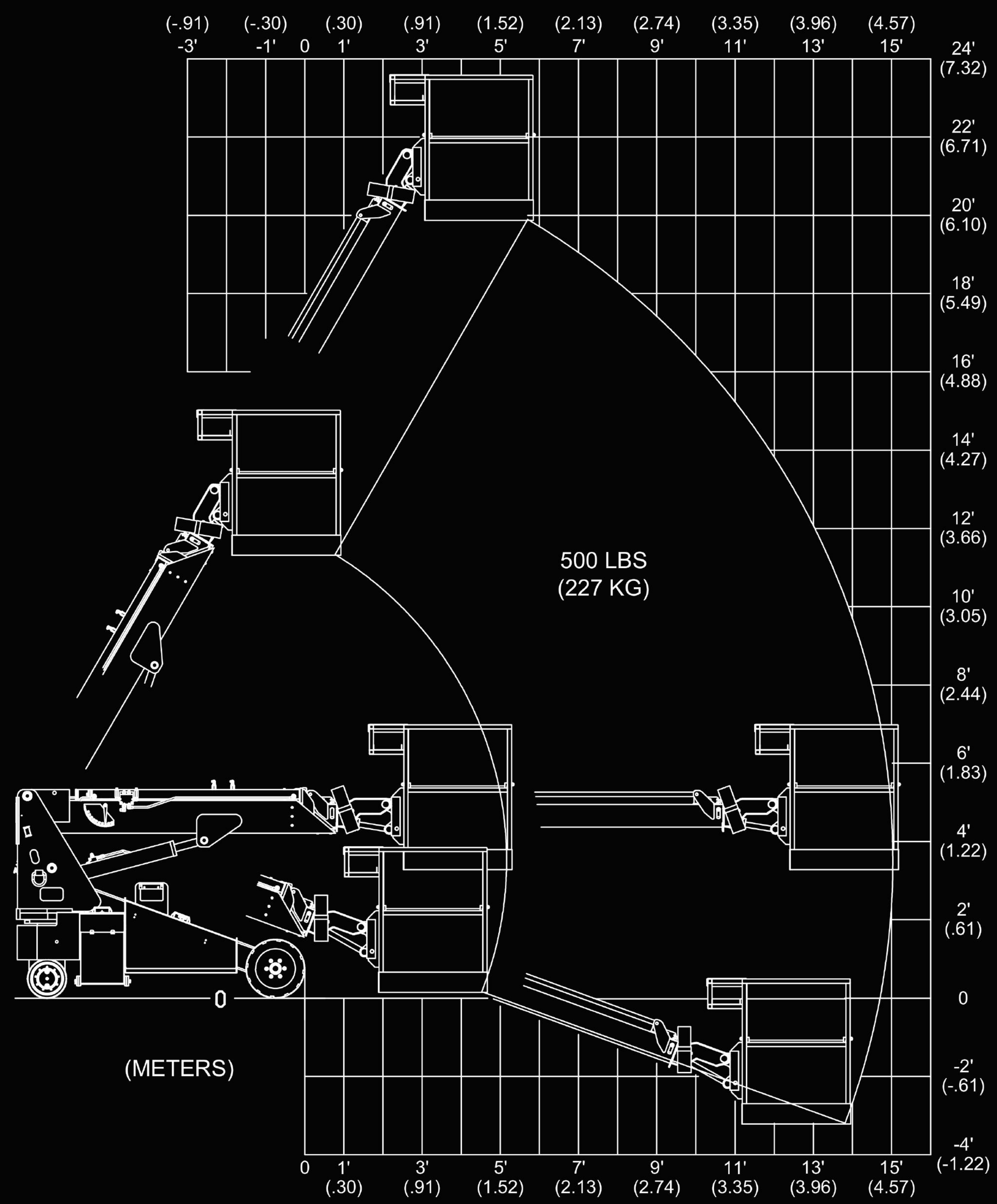

Rated capacity by horizontal reach (across, from the front of the tire) and vertical height (up). The rated load limiter shows the capacity at the current boom position.

The enhanced stability package must be installed.

Winch

1,950 lb RATED CAPACITY

CH 2 · Winch

RAISE · EXTEND · HOIST

↑	BOOM	+22°
	EXTEND	0.0 ft
	ROPE OUT	0.0 ft

The winch pays out and hauls in the wire rope · anti-two-block protection



WATCH VIDEO · 0:27

Winch
up to 1,950 lb

Anti-two-block protection on the hoist.

HOIST WINCH

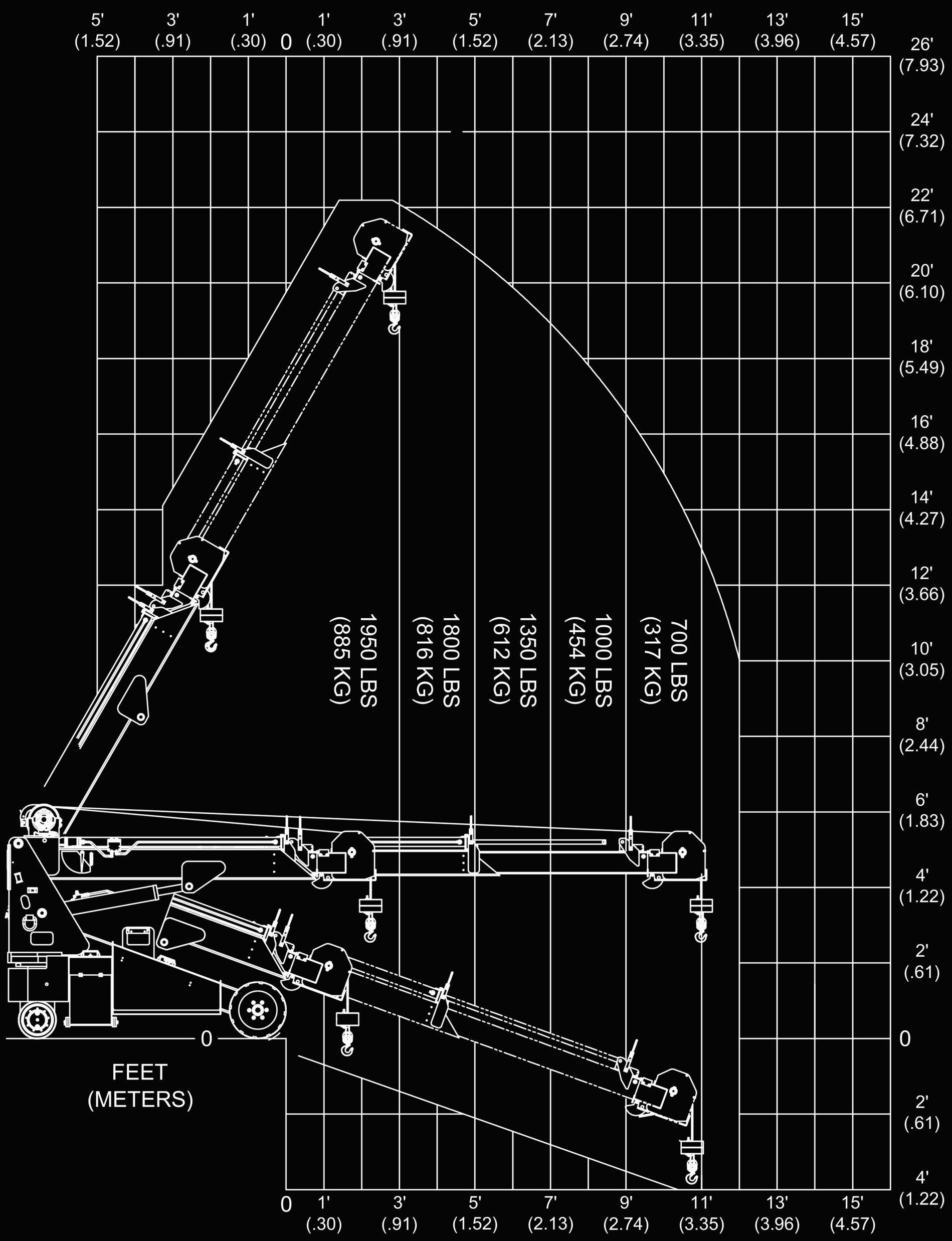

Rated capacity by horizontal reach (across, from the front of the tire) and vertical height (up). The rated load limiter shows the capacity at the current boom position.

Bailey | Engineered Access & Lifting

TRUSTED BY

BOEING · DPR CONSTRUCTION · NASA · LOCKHEED MARTIN · NORTHROP GRUMMAN · Raytheon An RTX Business · U.S. AIR FORCE · AIRBUS



20+ years

Engineered lifting solutions for more than two decades.

Custom built

Built for what standard equipment can't handle.

Mission critical

Aerospace, defense, cleanroom and industrial sites.

Let's get to work.

Tim Cooley

262-744-7893 · tim@baileycranes.com

baileycranes.com

Bailey | Engineered Access & Lifting

SBA U.S. Small Business Administration — SERVICE-DISABLED VETERAN-OWNED CERTIFIED

ISO 9001:2015 REGISTERED MANUFACTURER · MUSKEGO, WISCONSIN

Specifications subject to change