HANDLES INC.



KNURLED

T-BAR PULL HANDLE (Ø20 X 1000MM) TECHNICAL DATA SHEET



KNURLED

T-BAR PULL HANDLE (Ø20 X 1000MM)

Overview:
Knurled T-bar pull handle in brushed stainless steel, satin brass or titanium, sold as a pair.

Base Material:
Stainless Steel

Dimensions:
Length: 1000mm / CTC: 800mm
Projection: 66mm / Bar Ø: 20mm

Finish:

SKU: CH220, CH223, CH222

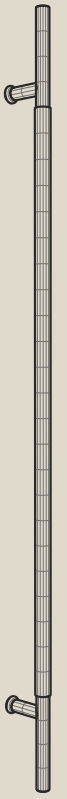

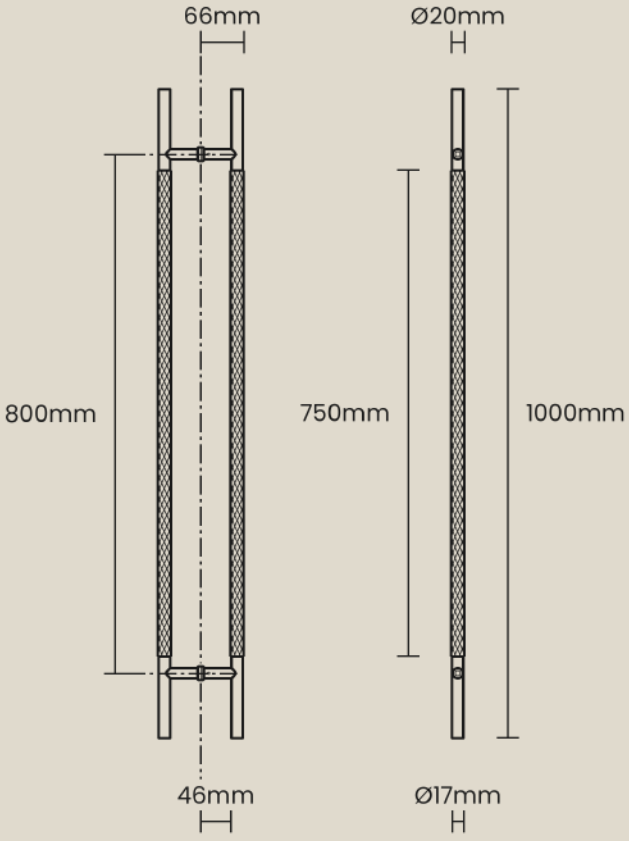

DIMENSIONS