Products for articulated vehicles semi-trailers trailers













Operating Instructions, Repair Manuals and Maintenance Instructions

Quality System
Quality Endorsed Company



You will find these products in this catalogue


1

Ball Bearing Turntables and Slewing rings


2

Fifth Wheel Couplings 2" and Mounting Plates


3

Heavy Duty Fifth Wheel Couplings 3½" 2", and Mounting Plates


4

Slider for Fifth Wheel Coupling


5

2" and 3½" King Pins

JOST

Disclaimer: This document is subject to change without notice. The information presented herein may be updated, amended, or revised at any time.

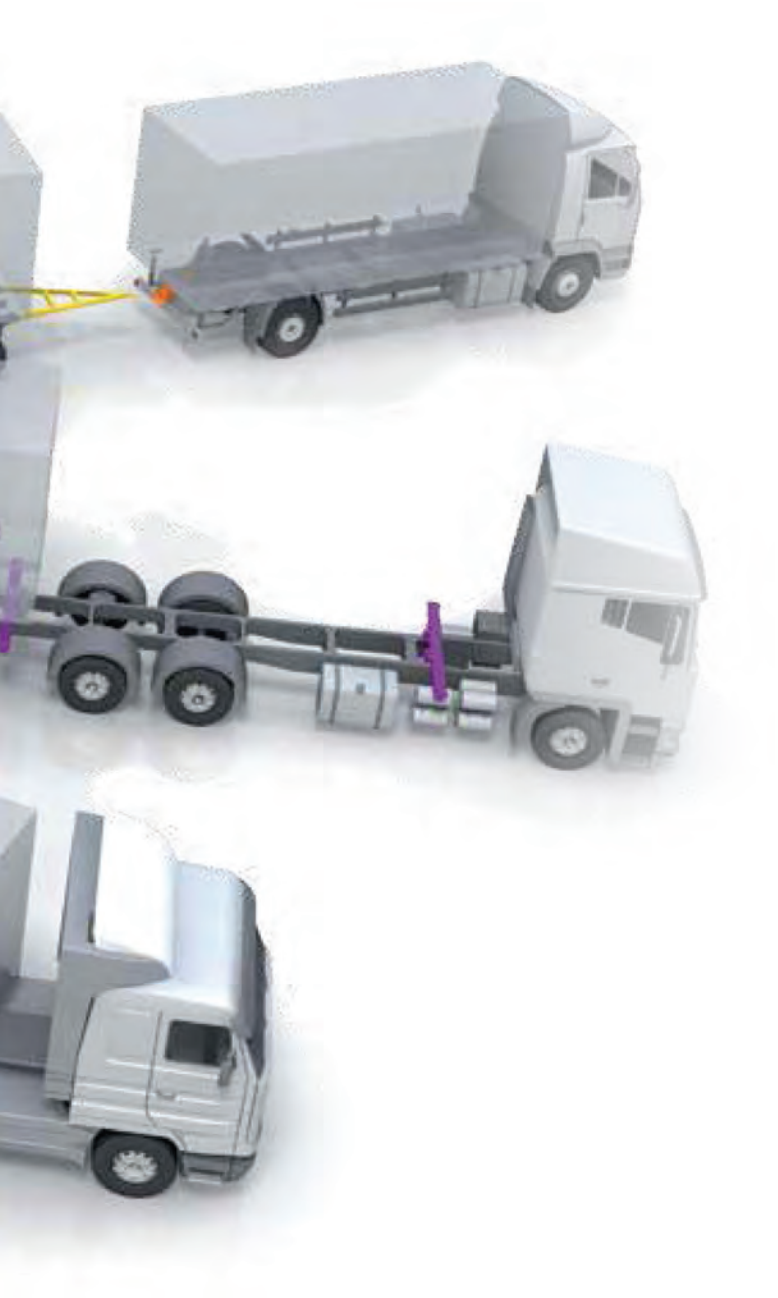

Selected Operating Instructions, Repair Manuals and Maintenance Instructions, which are referred to or appear in this catalogue, are applicable to the genuine product as manufactured/supplied by **JOST** Australia.

Where applicable, each product complies with the requirements of the Australian Design Rules (ADR's) 62/01, and the corresponding Component Registration Number (CRN) is detailed on the **JOST** Australia CRN List at the front of this catalogue.

For any enquires regarding **JOST** CRN's, please contact your local **JOST** Australia branch.

JOST AUSTRALIA PTY LTD

A.B.N. 60 001 081 778

JOST Australia Pty Ltd is a Quality Endorsed Company (QEC Lic. 10166), and complies to AS/NZS ISO 9001 and AS4801 for the following capability:

The registration covers the Quality Management System for the assembly and fitting of equipment for the truck and trailer industry including fifth wheels, landing gear systems, turntables, towing gear, hubodometers, mounting plates and associated replacement parts and accessories; the distribution of hydraulic hoists, pumps, valves, spare parts and accessories to the truck, industrial trailer.

JOST Australia Pty. Ltd.
Toll Free 1 800 811487
www.JOSTaustralia.com.au

Sydney: (02) 9838 8100
Brisbane: (07) 3272 5777
Melbourne: (03) 8368 8222
Perth: (08) 9355 4137
Adelaide (08) 8260 4055

6



Telescopic Landing Gear

7



Automatic Towing Hitches & Tow Eyes

8



Hubodometer and Hub Caps

Contents

Component Registration Numbers (CRN) pages 6–8
Jost D-Rating Guide for Triple Road Trains pages 9–11



Ball Bearing Turntables and Slewing Rings pages 12–25

Ball bearing turntables Series L and N 13–14
Ball bearing turntables Series HE and SO 15–16
Slewing ring Series KDL900/6W 17–18
Slewing ring Series KLK 19–20
Ball Race (Slew Ring) Service and Maintenance Bulletin 21-22
Ball bearing turntables 23-25



Fifth Wheel Couplings 2" and Mounting Plates pages 26–66

Operating and Maintenance Instructions 27–30
Central Lubrication for 2" Fifth Wheels 31
LubeTronic for Fifth Wheels 32-33
JSK36DV1 Pivot Bearing Mount 34–35
JSK37CZ Rubber Mount 36–37
JSK37CX Rubber Mount 38–39
JSK37CXW Rubber Mount 40–41
JSK37E Pivot Bearing Mount 42–43
JSK37EW Pivot Bearing Mount - Low Maintenance 44–45
JSK37CZW Rubber Mounting - Low Maintenance 46-47
JSK42 48-49
JSK37 Sensor Coupling 50–51
JSK37027 Roll Back Application 52–54
LP37E Low profile stabilised ballrace assembly 55–56
LP37CZ Low profile stablised ballrace assembly 57–58
LP37CX Low profile stablised ballrace assembly 59–60
DR37CZ Double row stablised ballrace assembly 61–62
DR37E Double row stabilised ballrace assembly 63–64
DR37CX Double row stabilised ballrace assembly 65-66
JOST Base Plates to Suit Pin & Bush Type Fifthwheels 67
JOST Base Plates to Suit Cusion “C” Type Fifthwheels 68
Easy connect 69



Heavy Duty Fifth Wheel Couplings 3½" and 2" pages 70-99

71-72
Operating and Maintenance Instructions 73-74
JSK38DV90 Rubber mount fifth wheel 75–76
JSK38C1 / JSK38C2 Rubber mount inter changeable fifth wheel 77–78
LP38C1 / LP38C2 low profile stabilised fifth wheel 79-80
DR38C1 / DR38C2 double row ballrace stabilised fifth wheel 81-82
JSK38G1 / JSK38G2 Cardan mount fifth wheel 83–84
JSK39CS and JSK39CW Rubber mount fifth wheel 85–86
LP39CS & LP39CSW Low profile stabilised fifth wheel 87–88
DR39CS & DR39CSW Double row stabilised fifth wheel 89–90
JSK50 Pivot bearing mount 91-92
JSK52 Heavy duty fifth wheel 93-94
JSK54 Heavy duty fifth wheel 95-99
Mounting plates and mounting instructions



Sliders for Fifth Wheel Couplings pages 100–110

101-103
JSKSL Slider Fifth wheels 104-105
JSK37EVM Manual Slider Assembly 106-107
JSK37EVP Air operated slider assembly 108-109
DH200 Dual height fifth wheel 110
Ballrace Slider fifth wheel assembly



2" and 3½" King Pins — pages 111-121

Technical Circular JOST King Pins 112
King Pin 2'' KZ1008 - KZ1012 113
King Pin 2'' KZ1516 114
King Pin 3 1/2'' KZ1016 115
Heavy Duty 3 1/2'' King Pin KZ5216 116
King Pin 3 1/2'' KZ1408 - KZ1412 117
King Pin 3 1/2'' KZ1416 118
King Pin 2'' KZ2816 119
King Pin lock for 2'' King Pin 120
Wear Limit Gauge - King Pin Gauge 121



Telescopic Landing Gear — pages 122–132

Modul landing gear information 123-124
Modul landing gear 125-128
A400 landing gear 129-130
Mounting and maintenance instructions 131-132



Towing Hitches & Tow Eyes — pages 133–159

Towing eyes 133-137
Jost tow eye lock 138
Welding instructions recommended for Rockinger drawbar eyes 139
Couplings and drawbar eyes 140-141
RO400 142–143
RO500 144–145
RO56E 146–147
RO243 148–149
RO283 150–151
RO805 152
RO244 153
Choice of the coupling /calculation 154–155
Rigid mounted pintle hooks 156-158
Pintle Hook Mount 159



Hubodometer and Hub Caps — pages 160–162

Hubodometers 161
Mounting Instructions for Hubodometer 162

Alloy Wheels — pages 163-164

Hydraulics — page 165

Service Tools — page 166

Component Registration Numbers (CRN)

Note: All D-Values have been transcribed directly from the original Component Test Reports.
(Current from 14th April 2003)

JOST Fifthwheels

Product Stock No	CRN & D-Value Specification		
JSK32AV	26278	D-Value: 160 kN	
JSK36DV1	26277	D-Value: 170 kN	
JSK36CV	41444	D-Value: 190 kN	150mm, 170mm, 185mm, 220mm, 250mm & 300mm pedestals
JSK37CZ	41876	D-Value: 190 kN	150mm, 170mm, 185mm, 220mm, 250mm & 300mm pedestal
JSK37E	36821	D-Value: 190 kN	(Same plate construction as JSK37CZ, but with pivot pedestals)
JSK37EW	36821	D-Value: 190 kN	(Greaseless version of JSK37E)
JSKSLE37E	42707	D-Value: 190 kN	
JSK37CZW	41876	D-Value: 190 kN	150mm, 170mm, 185mm, 220mm, 250mm & 300mm pedestals
			(Greaseless version of JSK37CZ)
JSK37CWS	41876	D-Value: 190kN	150mm, 170mm, 185mm, 220mm, 250mm & 300mm pedestals
			(Greaseless Sensor version of JSK37CZ)
JSK37CZS	41876	D-Value: 190kN	150mm, 170mm, 185mm, 220mm, 250mm & 300mm pedestals
			(Greaseable Sensor version of JSK37CZ)
JSK37CX	45374	D-Value: 240kN	150mm, 170mm, 185mm, 220mm, 250mm & 300mm pedestals
JSK37027	38553	D-Value: 200kN	
JSK37070	38553	D-Value: 200kN	
JSK38C1	24329	D-Value: 260 kN	
JSK38C2	42531	D-Value: 216 kN	
JSK38DV	36688	D-Value: 260 kN	
JSK38G1	24327	D-Value: 260 kN	
JSK38G2	42706	D-Value: 216 kN	
JSK39CS	45375	D-Value: 275kN	
JSK39CSW	45375	D-Value: 275kN	
JSK52	46422	D-Value: 400kN	
JSK50	24502	D-Value: 300 kN	
JSK36AV2	24497	D-Value: 162.4 kN	
JSK42ZJ	36130	D-Value: 200 kN	
JSK42WJ	36130	D-Value: 200 kN	
LP36CV	24835	D-Value: 190 kN	
LP37CZ / LP37CW	24836	D-Value: 190 kN	
LP37E / LP37EW	24833	D-Value: 190 kN	
LP37E027	40925	D-Value: 190kN	
LP37CX	46788	D-Value: 240kN	
LP37G240	24831	D-Value: 162.4 kN	
LP38C1	47221	D-Value: 240 kN	
LP38C12	24834	D-Value: 216 kN	
DH200 - Dual Height Fifthwheel	26983	D-Value: 120 kN	(max height: 290mm, min height: 165mm)
DR36CV	24832	D-Value: 190 kN	
DR37CZ / DR37CW	24842	D-Value: 190 kN	
DR37E / DR37EW	24840	D-Value: 190 kN	
DR38C1	24843	D-Value: 260 kN	
DR38C12	41443	D-Value: 216 kN	
LP39CS	47151	D-Value: 240kN	
LP39CSW	47151	D-Value: 240kN	
DR38DV90	36819	D-Value: 260 kN	

DR39CS	45373	D-Value: 275kN	
DR37CX	45372	D-Value: 240kN	
EVM SLIDER	26167	D-Value: 190 kN	For use with JSK36CV150 with EVM Slider
EVM SLIDER	26169	D-Value: 190 kN	For use with JSK37CZ150 with EVM Slider
EVP SLIDER	26168	D-Value: 190 kN	For use with JSK36CV150 with EVP Slider
EVP SLIDER	26170	D-Value: 190 kN	For use with JSK37CZ150 with EVP Slider
EVPLP SLIDER	24836 and 26170	D-Value: 190kN	
JSKSLE SLIDER	42707	D-Value: 190kN	
SO36CV	24844	D-Value: 162.4 kN	
SO37CZ	24845	D-Value: 162.4 kN	
SO37E	24838	D-Value: 162.4 kN	

JOST Kingpins

Product Stock No		CRN & D-Value Specification	
KZ1008, KZ1010, KZ1012, KZ101216		24156	D-Value: 190 kN
KZ091201 (Part of the KZ0908 Assembly)	FEA Approved **	24857	D-Value: 108 kN
KZ1516	FEA Approved **	24344	D-Value: 162.4 kN
KZ1016		24292	D-Value: 400 kN
KZ1408, KZ1410, KZ1412	FEA Approved **	24811	D-Value: 162.4 kN
KZ1416	FEA Approved **	24812	D-Value: 200 kN
KZ1706, KZ1707, KZ1710, KZ1712	FEA Approved **	24856	D-Value: 152 kN
KZ101216		24156	D-Value: 190kN
KP2108		43948	D-Value:190kN
KP2210		43949	D-Value: 190kN
KP2312		43950	D-Value: 190kN
KP3508		43487	D-Value: 260 kN
KP3510		43488	D-Value: 260 kN
KP3512		43489	D-Value: 260 kN
KP3516		42523	D-Value: 260 kN

Buyers Pintle Hooks

Product Stock No	CRN & D-Value Specification		
BDB1394	37264	D-Value: 165 kN	
BPCPH15WMK	37267	D-Value: 75 kN	
BPCPH20WMK	37268	D-Value: 100 kN	
BPCP45AC4 & BPCP45AC6	37266	D-Value: 165 kN	
BPCBH850MM	37265	D-Value: 30 kN	
BPC PH 8 WMK	37270	D-Value: 50 kN	
BPCPH5WMK	37269	D-Value: 35 kN	
BPCPH30	44894	D-Value: 125kN	
BPCPH50	45107	D-Value: 135kN	
BPCRM650M	45999	D-Value: 42kN	WITHOUT THE BALL
BPCRM650M	45999	D-Value: 17kN	USED WITH BALL

*** Finite Element Analysis (FEA) has been approved for Kingpins by the Austrailian Standards Committee (Refer: Supplement 1-2002 to AS 2175-1995) as an alternative to physical testing.*

Rockinger Coupling

Product Stock No	CRN & D-Value Specification		
RO500 Rockinger Coupler	28986	D-Value: 260 kN	
		(At ZERO download)	
RO500B66000B	43546	D-Value: 200kN	WITH 2500 KG DOWN LOAD
RO500B66500B	43545	D-Value: 285 kN	WITH 1000KG DOWN LOAD
ROE57005	49663	D-Value: 314kN	WITH ZERO DOWNLOAD
ROCKINGER 400	43196	D-Value: 130kN	WITH 1000 KG DOWNLOAD
ROCKINGER 243U130	43247	D-Value: 30kN	WITH 350 KG (MAX) DOWNLOAD
RO850B30	49383	D-Value: 50kN	
RO860B40	49384	D-Value: 78.2kN	
RO860B50	49385	D-Value: 98.1kN	

JOST & Rockinger Towing Eyes

Product Stock No		CRN & D-Value Specification	
ROE57374	(Replaces **JOST** ZO46)	41539	D-Value: 120 kN
ROCK57394	(50mm Weld-In) (Replaces **JOST** ZO59)	24529	D-Value: 314 kN
ROE57272	(50mm Weld-In) (Replaces **JOST** ZO58)	41941	D-Value: 191 kN
ROCK57254	(50mm) (Replaces **JOST** ZO60)	29201	D-Value: 191 kN
JOST0063126		41615	D-Value: 125kN
JOST106B2H		41613	D-Value: 200kN
JOST106B2R		41614	D-Value: 140kN
JOST57374		42704	D-Value: 120kN
JOST57272		42293	D-Value: 200kN
JOST57394		42305	D-Value: 280kN
JOST57254		42292	D-Value: 260kN
JOST57254E		42292	D-Value: 260kN

Jost D-Rating Guide for Triple Road Trains
(Both Tandem and Triaxle Dollies)

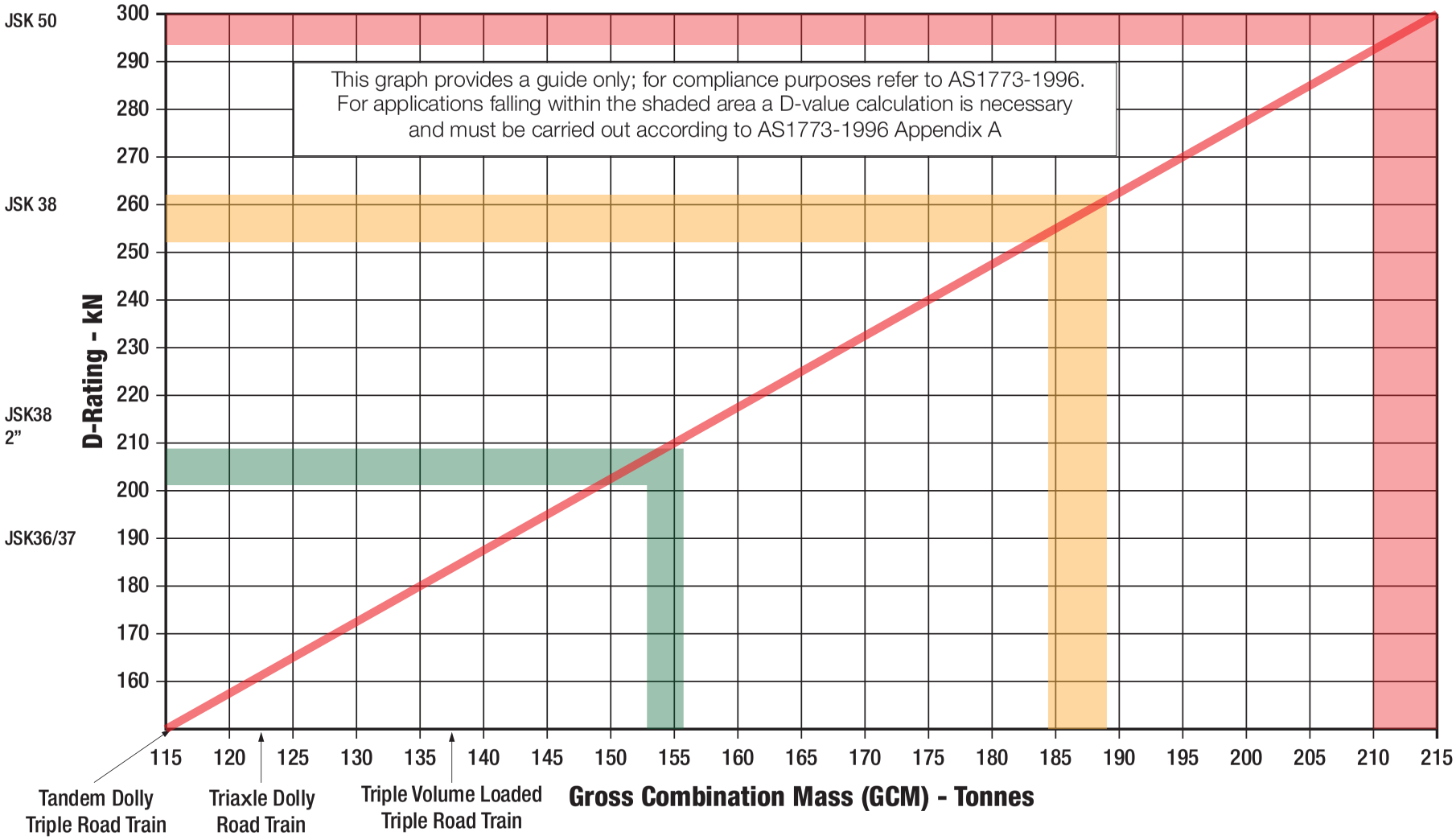

Note: This chart was developed for JOST Australia and is applicable only to JOST products

Tractor Mass (Tonnes)

Coupling D Value (kN)	4.0	4.5	5.0	5.5	6.0	6.5	7.0	7.5	8.0	8.5	9.0	9.5	10.0	10.5	11.0	11.5	12.0	12.5	13.0	13.5	14.0	14.5	15.0
20.0	4.2																						
22.0	5.1	4.5	4.1																				
24.0	6.3	5.4	4.8	4.4	4.1																		
26.0	7.9	6.4	5.6	5.1	4.7	4.5	4.3	4.1															
28.0	10.0	7.8	6.7	5.9	5.4	5.1	4.8	4.6	4.4	4.3	4.2	4.1											
30.0	13.0	9.5	7.9	6.9	6.2	5.8	5.4	5.2	5.0	4.8	4.6	4.5	4.4	4.3	4.2	4.2	4.1	4.0					
32.0	17.7	11.9	9.4	8.0	7.1	6.5	6.1	5.8	5.5	5.3	5.1	5.0	4.8	4.7	4.6	4.6	4.5	4.4	4.4	4.3	4.3	4.2	4.2
34.0	26.0	15.1	11.3	9.4	8.2	7.4	6.9	6.4	6.1	5.9	5.6	5.5	5.3	5.2	5.1	5.0	4.9	4.8	4.7	4.7	4.6	4.6	4.5
36.0	44.4	19.9	13.8	11.0	9.4	8.4	7.7	7.2	6.8	6.5	6.2	6.0	5.8	5.6	5.5	5.4	5.3	5.2	5.1	5.0	5.0	4.9	4.9
38.0		27.8	17.2	13.1	10.9	9.6	8.7	8.0	7.5	7.1	6.8	6.5	6.3	6.1	6.0	5.8	5.7	5.6	5.5	5.4	5.4	5.3	5.2
40.0		43.4	22.1	15.8	12.7	10.9	9.8	8.9	8.3	7.8	7.5	7.1	6.9	6.7	6.5	6.3	6.2	6.1	5.9	5.8	5.8	5.7	5.6
42.0		88.1	29.8	19.3	14.9	12.5	11.0	10.0	9.2	8.6	8.2	7.8	7.5	7.2	7.0	6.8	6.7	6.5	6.4	6.3	6.2	6.1	6.0
44.0			43.6	24.3	17.8	14.5	12.5	11.2	10.2	9.5	8.9	8.5	8.1	7.8	7.6	7.4	7.2	7.0	6.8	6.7	6.6	6.5	6.4
46.0			75.4	31.8	21.5	16.8	14.2	12.5	11.3	10.5	9.8	9.3	8.8	8.5	8.2	7.9	7.7	7.5	7.3	7.2	7.1	6.9	6.8
48.0				44.3	26.5	19.8	16.3	14.1	12.6	11.5	10.7	10.1	9.6	9.2	8.8	8.5	8.3	8.0	7.8	7.7	7.5	7.4	7.3
50.0				69.5	33.9	23.6	18.7	15.9	14.0	12.7	11.8	11.0	10.4	9.9	9.5	9.2	8.9	8.6	8.4	8.2	8.0	7.9	7.7
52.0					45.5	28.7	21.8	18.1	15.7	14.1	12.9	12.0	11.3	10.7	10.2	9.8	9.5	9.2	9.0	8.7	8.5	8.4	8.2
54.0					66.7	35.9	25.8	20.7	17.6	15.6	14.2	13.1	12.2	11.6	11.0	10.6	10.2	9.8	9.5	9.3	9.1	8.9	8.7
56.0					117.5	46.9	30.9	23.9	19.9	17.4	15.6	14.3	13.3	12.5	11.9	11.3	10.9	10.5	10.2	9.9	9.6	9.4	9.2
58.0						65.4	38.1	27.9	22.7	19.4	17.2	15.7	14.5	13.5	12.8	12.2	11.7	11.2	10.8	10.5	10.2	10.0	9.8
60.0						103.6	48.4	33.1	26.0	21.8	19.1	17.2	15.7	14.6	13.8	13.1	12.5	12.0	11.6	11.2	10.9	10.6	10.3
62.0							65.1	40.2	30.1	24.6	21.2	18.9	17.2	15.9	14.9	14.0	13.4	12.8	12.3	11.9	11.5	11.2	10.9
64.0							95.9	50.1	35.4	28.1	23.7	20.8	18.8	17.2	16.0	15.1	14.3	13.6	13.1	12.6	12.2	11.9	11.5
66.0								65.3	42.3	32.3	26.6	23.1	20.6	18.7	17.3	16.2	15.3	14.6	13.9	13.4	13.0	12.6	12.2
68.0								91.5	51.9	37.6	30.2	25.6	22.6	20.4	18.7	17.4	16.4	15.6	14.8	14.2	13.7	13.3	12.9
70.0									66.0	44.5	34.4	28.7	24.9	22.3	20.3	18.8	17.6	16.6	15.8	15.1	14.6	14.0	13.6
72.0									88.9	53.8	39.8	32.3	27.6	24.4	22.1	20.3	18.9	17.8	16.9	16.1	15.4	14.9	14.4
74.0										67.0	46.6	36.6	30.7	26.8	24.0	21.9	20.3	19.0	18.0	17.1	16.4	15.7	15.2
76.0										87.5	55.7	42.0	34.4	29.6	26.2	23.7	21.9	20.4	19.2	18.2	17.3	16.6	16.0
78.0											68.2	48.8	38.8	32.8	28.7	25.8	23.6	21.8	20.5	19.3	18.4	17.6	16.9
80.0											86.9	57.6	44.2	36.5	31.5	28.0	25.5	23.5	21.9	20.6	19.5	18.6	17.9
82.0											117.3	69.6	50.9	41.0	34.8	30.6	27.5	25.2	23.4	21.9	20.7	19.7	18.9
84.0												86.8	59.6	46.4	38.6	33.5	29.9	27.2	25.1	23.4	22.0	20.9	20.0
86.0												113.6	71.1	53.1	43.2	36.9	32.5	29.4	26.9	25.0	23.5	22.2	21.1
88.0													87.1	61.6	48.6	40.8	35.5	31.8	28.9	26.7	25.0	23.5	22.3
90.0													111.1	72.7	55.3	45.4	39.0	34.5	31.2	28.6	26.6	25.0	23.6
92.0														87.8	63.6	50.8	42.9	37.6	33.7	30.7	28.4	26.5	25.0
94.0														109.6	74.3	57.5	47.6	41.0	36.4	33.0	30.4	28.3	26.5
96.0															88.7	65.7	53.0	45.1	39.6	35.6	32.5	30.1	28.2
98.0															108.8	76.1	59.6	49.7	43.1	38.4	34.9	32.1	29.9
100.0																89.7	67.7	55.2	47.2	41.6	37.5	34.3	31.8
102.0																108.5	77.9	61.8	51.9	45.2	40.4	36.7	33.9
104.0																	91.0	69.8	57.5	49.4	43.7	39.4	36.2
106.0																	108.5	79.7	64.0	54.1	47.4	42.4	38.6
108.0																		92.3	71.9	59.7	51.5	45.7	41.4
110.0																		108.9	81.6	66.2	56.3	49.5	44.4
112.0																			93.8	74.0	61.9	53.7	47.8
114.0																			109.5	83.5	68.4	58.5	51.6

Theoretical towing capacity (in tonnes) of the coupling system based on tractor mass (tonnes) and coupling D Value (kN)

Calculation as follows:

D Value (kN) = g . (TxR)/(T+R) or Gravity (9.81ms-2) X (Tractor Mass (t) X Trailer Mass (t))/(Tractor Mass (t) + Trailer Mass (t))

Example of 10t Tractor with a 74kN rated coupling equates to being able to tow a trailer with 30.7 tonne mass (in orange)

Tractor Mass (Tonnes)

Trailer Mass (Tonnes)

Tonne	4.0	4.5	5.0	5.5	6.0	6.5	7.0	7.5	8.0	8.5	9.0	9.5	10.0	10.5	11.0	11.5	12.0	12.5	13.0	13.5	14.0	14.5	15.0
4.0	19.6	20.8	21.8	22.7	23.5	24.3	25.0	25.6	26.2	26.7	27.2	27.6	28.0	28.4	28.8	29.1	29.4	29.7	30.0	30.3	30.5	30.8	31.0
5.0	21.8	23.2	24.5	25.7	26.8	27.7	28.6	29.4	30.2	30.9	31.5	32.1	32.7	33.2	33.7	34.2	34.6	35.0	35.4	35.8	36.1	36.5	36.8
6.0	23.5	25.2	26.8	28.2	29.4	30.6	31.7	32.7	33.6	34.5	35.3	36.1	36.8	37.5	38.1	38.7	39.2	39.8	40.3	40.7	41.2	41.6	42.0
7.0	25.0	26.9	28.6	30.2	31.7	33.1	34.3	35.5	36.6	37.7	38.6	39.5	40.4	41.2	42.0	42.7	43.4	44.0	44.6	45.2	45.8	46.3	46.8
8.0	26.2	28.3	30.2	32.0	33.6	35.2	36.6	38.0	39.2	40.4	41.5	42.6	43.6	44.5	45.4	46.3	47.1	47.9	48.6	49.3	49.9	50.6	51.2
9.0	27.2	29.4	31.5	33.5	35.3	37.0	38.6	40.1	41.5	42.9	44.1	45.3	46.5	47.5	48.6	49.5	50.5	51.3	52.2	53.0	53.7	54.5	55.2
10.0	28.0	30.4	32.7	34.8	36.8	38.6	40.4	42.0	43.6	45.1	46.5	47.8	49.1	50.2	51.4	52.5	53.5	54.5	55.4	56.4	57.2	58.1	58.9
11.0	28.8	31.3	33.7	36.0	38.1	40.1	42.0	43.7	45.4	47.0	48.6	50.0	51.4	52.7	54.0	55.2	56.3	57.4	58.5	59.5	60.4	61.4	62.3
12.0	29.4	32.1	34.6	37.0	39.2	41.4	43.4	45.3	47.1	48.8	50.5	52.0	53.5	54.9	56.3	57.6	58.9	60.1	61.2	62.3	63.4	64.4	65.4
13.0	30.0	32.8	35.4	37.9	40.3	42.5	44.6	46.7	48.6	50.4	52.2	53.8	55.4	57.0	58.5	59.9	61.2	62.5	63.8	65.0	66.1	67.2	68.3
14.0	30.5	33.4	36.1	38.7	41.2	43.5	45.8	47.9	49.9	51.9	53.7	55.5	57.2	58.9	60.4	61.9	63.4	64.8	66.1	67.4	68.7	69.9	71.0
15.0	31.0	34.0	36.8	39.5	42.0	44.5	46.8	49.1	51.2	53.2	55.2	57.1	58.9	60.6	62.3	63.9	65.4	66.9	68.3	69.7	71.0	72.3	73.6
16.0	31.4	34.5	37.4	40.2	42.8	45.3	47.8	50.1	52.3	54.5	56.5	58.5	60.4	62.2	63.9	65.6	67.3	68.8	70.4	71.8	73.2	74.6	75.9
17.0	31.8	34.9	37.9	40.8	43.5	46.1	48.6	51.1	53.4	55.6	57.7	59.8	61.8	63.7	65.5	67.3	69.0	70.7	72.3	73.8	75.3	76.8	78.2
18.0	32.1	35.3	38.4	41.3	44.1	46.8	49.4	51.9	54.3	56.6	58.9	61.0	63.1	65.1	67.0	68.8	70.6	72.4	74.0	75.7	77.3	78.8	80.3
19.0	32.4	35.7	38.8	41.8	44.7	47.5	50.2	52.8	55.2	57.6	59.9	62.1	64.3	66.3	68.3	70.3	72.2	74.0	75.7	77.4	79.1	80.7	82.2
20.0	32.7	36.0	39.2	42.3	45.3	48.1	50.9	53.5	56.1	58.5	60.9	63.2	65.4	67.5	69.6	71.6	73.6	75.5	77.3	79.1	80.8	82.5	84.1
21.0	33.0	36.4	39.6	42.8	45.8	48.7	51.5	54.2	56.8	59.4	61.8	64.2	66.5	68.7	70.8	72.9	74.9	76.9	78.8	80.6	82.4	84.1	85.8
22.0	33.2	36.6	40.0	43.2	46.2	49.2	52.1	54.9	57.6	60.1	62.7	65.1	67.4	69.7	71.9	74.1	76.2	78.2	80.2	82.1	83.9	85.7	87.5
23.0	33.4	36.9	40.3	43.5	46.7	49.7	52.6	55.5	58.2	60.9	63.5	66.0	68.4	70.7	73.0	75.2	77.4	79.4	81.5	83.5	85.4	87.2	89.1
24.0	33.6	37.2	40.6	43.9	47.1	50.2	53.2	56.1	58.9	61.6	64.2	66.8	69.2	71.7	74.0	76.3	78.5	80.6	82.7	84.8	86.7	88.7	90.6
25.0	33.8	37.4	40.9	44.2	47.5	50.6	53.6	56.6	59.5	62.2	64.9	67.5	70.1	72.5	74.9	77.3	79.5	81.8	83.9	86.0	88.0	90.0	92.0
26.0	34.0	37.6	41.1	44.5	47.8	51.0	54.1	57.1	60.0	62.8	65.6	68.3	70.9	73.4	75.8	78.2	80.5	82.8	85.0	87.2	89.3	91.3	93.3
27.0	34.2	37.8	41.4	44.8	48.2	51.4	54.5	57.6	60.5	63.4	66.2	68.9	71.6	74.2	76.7	79.1	81.5	83.8	86.1	88.3	90.4	92.5	94.6
28.0	34.3	38.0	41.6	45.1	48.5	51.8	54.9	58.0	61.0	64.0	66.8	69.6	72.3	74.9	77.5	80.0	82.4	84.8	87.1	89.4	91.6	93.7	95.8
29.0	34.5	38.2	41.8	45.4	48.8	52.1	55.3	58.5	61.5	64.5	67.4	70.2	72.9	75.6	78.2	80.8	83.3	85.7	88.1	90.4	92.6	94.8	97.0
30.0	34.6	38.4	42.0	45.6	49.1	52.4	55.7	58.9	62.0	65.0	67.9	70.8	73.6	76.3	79.0	81.6	84.1	86.6	89.0	91.3	93.6	95.9	98.1
31.0	34.8	38.5	42.2	45.8	49.3	52.7	56.0	59.2	62.4	65.4	68.4	71.3	74.2	76.9	79.6	82.3	84.9	87.4	89.9	92.3	94.6	96.9	99.2
32.0	34.9	38.7	42.4	46.0	49.6	53.0	56.3	59.6	62.8	65.9	68.9	71.9	74.7	77.6	80.3	83.0	85.6	88.2	90.7	93.1	95.5	97.9	100.2
33.0	35.0	38.8	42.6	46.2	49.8	53.3	56.7	60.0	63.2	66.3	69.4	72.4	75.3	78.1	80.9	83.7	86.3	88.9	91.5	94.0	96.4	98.8	101.2
34.0	35.1	39.0	42.8	46.4	50.0	53.5	56.9	60.3	63.5	66.7	69.8	72.8	75.8	78.7	81.5	84.3	87.0	89.7	92.3	94.8	97.3	99.7	102.1
35.0	35.2	39.1	42.9	46.6	50.2	53.8	57.2	60.6	63.9	67.1	70.2	73.3	76.3	79.2	82.1	84.9	87.7	90.4	93.0	95.6	98.1	100.6	103.0
36.0	35.3	39.2	43.1	46.8	50.5	54.0	57.5	60.9	64.2	67.5	70.6	73.7	76.8	79.7	82.7	85.5	88.3	91.0	93.7	96.3	98.9	101.4	103.9
37.0	35.4	39.4	43.2	47.0	50.6	54.2	57.7	61.2	64.5	67.8	71.0	74.2	77.2	80.2	83.2	86.1	88.9	91.7	94.4	97.0	99.6	102.2	104.7
38.0	35.5	39.5	43.3	47.1	50.8	54.5	58.0	61.4	64.8	68.1	71.4	74.6	77.7	80.7	83.7	86.6	89.5	92.3	95.0	97.7	100.4	103.0	105.5
39.0	35.6	39.6	43.5	47.3	51.0	54.7	58.2	61.7	65.1	68.5	71.7	74.9	78.1	81.2	84.2	87.1	90.0	92.9	95.6	98.4	101.1	103.7	106.3
40.0	35.7	39.7	43.6	47.4	51.2	54.9	58.4	62.0	65.4	68.8	72.1	75.3	78.5	81.6	84.6	87.6	90.6	93.4	96.2	99.0	101.7	104.4	107.0

Theoretical D Value (kN) calculations based on tractor and trailer mass (in tonnes)
Calculation as follows:

D Value (kN) = g . (TxR)/(T+R) or Gravity (9.81ms-2) X (Tractor Mass (t) X Trailer Mass (t))/(Tractor Mass (t) + Trailer Mass (t))

Example of 10t Tractor towing 30t Trailer
in green above

D Value = 9.81 X (10x30)/(10+30)
D Value = 9.81 X 300/40
D Value = 73.575 kN
With Compliments from
D Value = 73.6 kN

Ball Bearing Turntables and Slewing rings

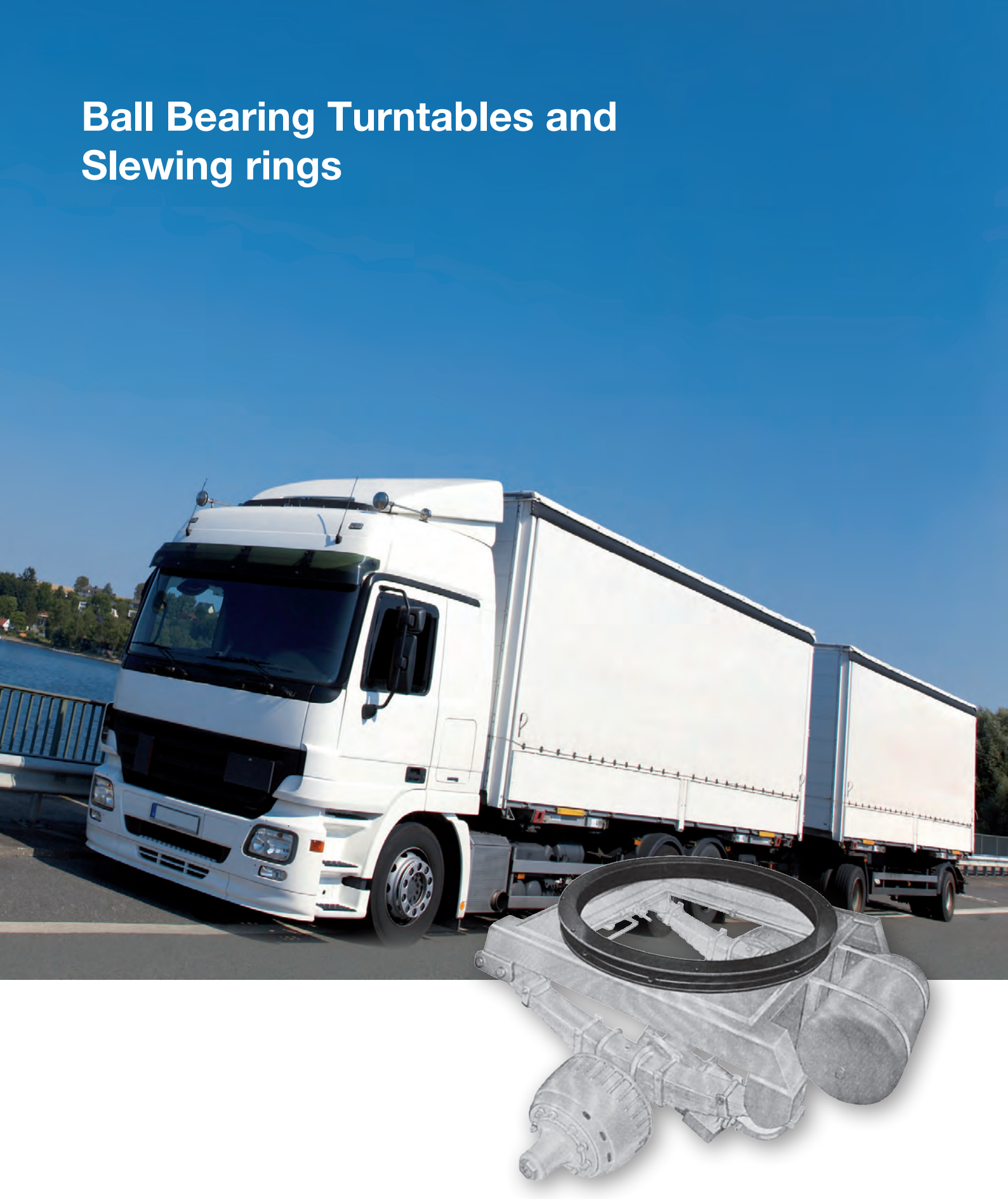

Ball bearing turntables – Series L and N

L-series = for farm carts and trailers with a speed up to 30 km/h (18m.p.h.).

N-series = for heavy farm carts and light truck trailers with a speed above 30 km/h (18 m.p.h.).

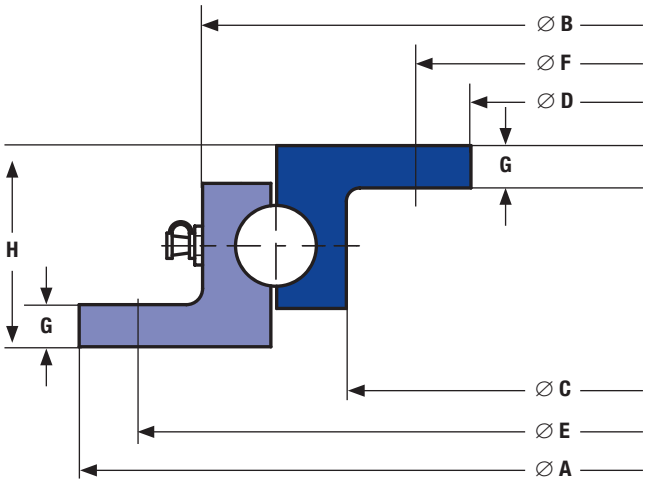

Slewing rings are supplied undrilled and primed in black for corrosion protection. The measurements are subject to our standard tolerances. For the turntables of the N series the load limits are only valid for operation on paved roads and under conditions prevailing in Europe.

The axial load can be exceeded by 30 to 50% on the turntables of the N series if the speed is below 30 km/h (18 m.p.h.).

See reverse for fitting and maintenance instructions.
The right to alter specifications is reserved.

Type	∅ A mm	∅ B mm	∅ C mm	∅ D mm	∅ E mm	∅ F mm	∅ G mm	∅ H mm	Weight approx. kg	Axial Load kN
KLK400L	400	342	292	230	375	260	8	45	11	7,5
KLK500L	500	442	392	330	475	360	8	45	15	9
KLK650L	650	592	542	480	625	510	8	45	20	15
KLK750L	750	692	642	580	725	610	8	45	23	18
KLK850L	850	792	742	680	825	710	8	45	27	25
KLK950L	950	892	842	780	925	810	8	45	30	30
KLK1050L	1050	992	942	880	1025	910	8	45	34	35
KLK500N	500	437	384	315	475	340	8	52	17	18
KLK650N	650	587	534	465	625	490	8	52	23	25
KLK750N	750	687	634	565	725	590	8	52	28	30
KLK850N	850	787	734	665	825	690	8	52	32	35
KLK950N	950	887	834	765	925	790	8	52	36	40
KLK1050N	1050	987	934	865	1025	890	8	52	40	45

Fitting and Maintenance Instructions for L and N series

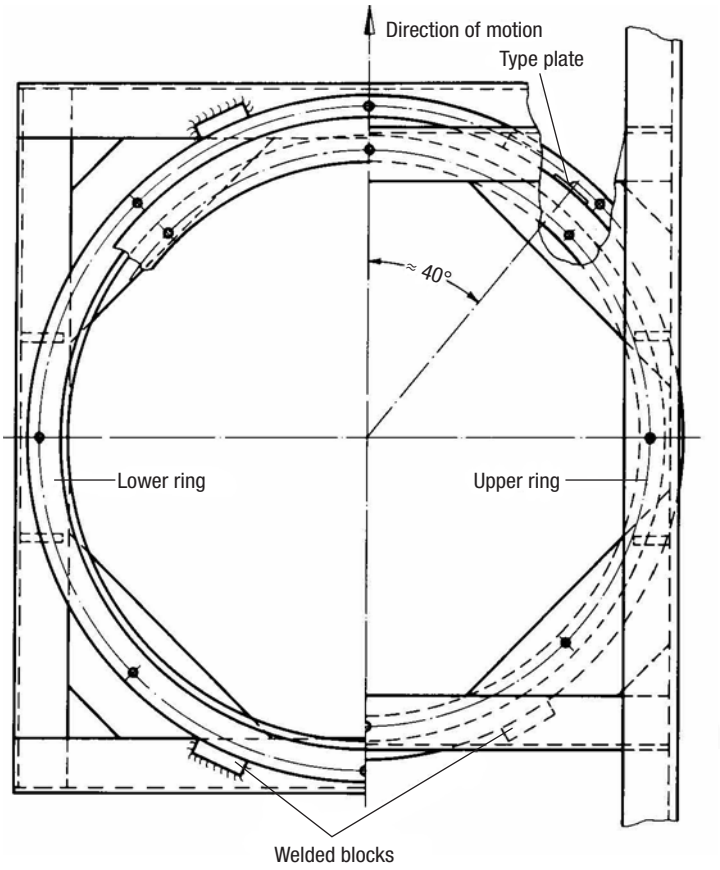

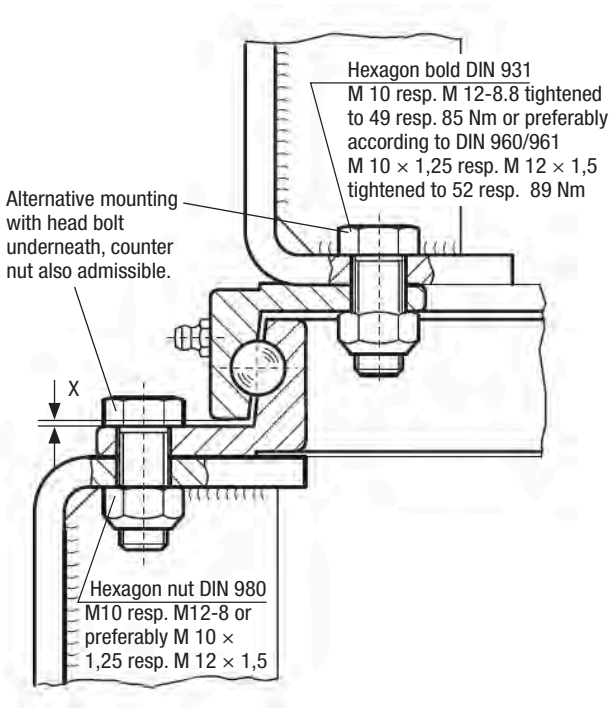

1. The ball bearing turntable must be mounted on a completely flat (max. unevenness 1mm) and horizontally and vertically rigid base with at least 50% of the circumference adequately supported. Particular attention should be paid to the support of the web section area containing the ball bearing races. Any unevenness under the flanges can be corrected with metal strips or by filling in with plastic metal.

2. Each flange must be attached with a minimum of 8 high tensile bolts grade 8.8, preferably M 10 × 1,25 (3/8 – 24) or M 12 × 1,5 (7/16–20) for sizes below 650 mm (25 5/8") dia. 4 to 6 bolts are adequate. In case of operation under adverse conditions, we recommend the use of bolts with enlarged contact surface (such as Tensi Lock or Verbus Ripp), or to increase the number of bolts. The thickness of paint between turntable and frame should not exceed 50mm to guarantee the fit to be friction-tight.

3. To ease the shear load on the mounting bolts at least four blocks should be welded on immediately adjoining each flange. The ball bearing turntable must not be mounted by means of welding.

4. **JOST** turntables are lubricated with a lubricant suitable for the type of operation and the adherent operating conditions before they leave the factory, however, the turntable must be adequately re-lubricated with high quality ball bearing grease (lithium saponified, NLGI class 2) before the trailer is put into operation for the first time. The relubrication should build up a collar of grease in the gap between the 2 rings of the turntable thus preventing ingress of grit and water into the ball races.

5. The ball bearing turntable must be lubricated according to use but at least once a month with a lubricant suitable for the type of operation and the adherent operating condition (lithium saponified, NLGI class 2). While lubricating the A-frame should be turned so that the grease is evenly distributed and a collar of grease is being built up in the gap between the 2 rings. The tightness of the mounting bolts should also be checked.

6. Ball bearing turntables are subject to wear. The limit of wear is reached when there is 2,5 mm axial play. This is the case at the very latest when the air gap X = 1 mm at any point on the circumference of the turntable.

Ball bearing turntables – Series HE and SO

For drawbar trailers and special trailers

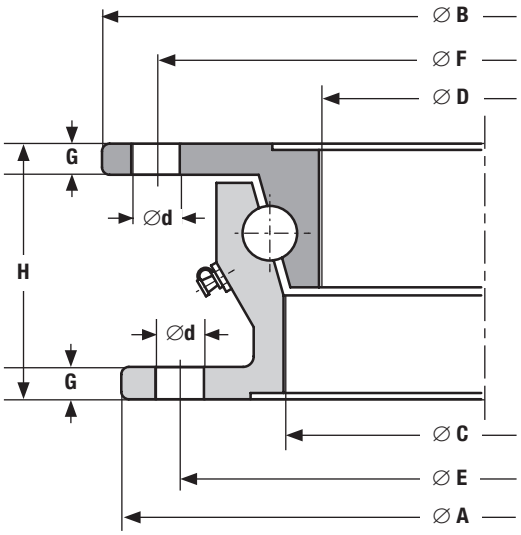

HE
Standard

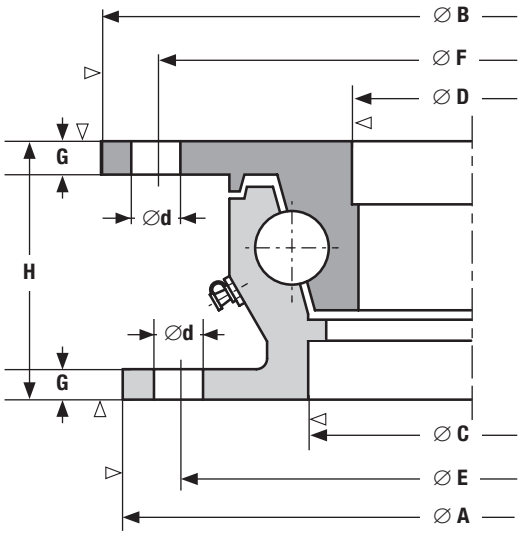

SO
Standard

▽ = shaped profile

Type	∅ A mm	∅ B mm	∅ C mm	∅ D mm	∅ E mm	∅ F mm	G mm	H mm	∅ d mm	Weight approx. kg	Axial load kN
*HE5	880	895	783	762	852	866	9	80	16	43	50
HE181000	1000	1008	886	859	960	974	10	90	–	63	80
SO100024	987	1000	871	844	952	966	10	90	–	72	120
*SO110024	1095	1108	979	952	1060	1074	10	90	18	82	160
KLKHE120022	1200	1211	1086	1059	1160	1174	10	90	18	76	130

Note: SO100024 used in SO assembly
Ball bearing turntables are supplied undrilled.
*drilled and primed in black for corrosion protection.

The measurements are subject to our standard tolerances.

The above axial loads are applicable if the slewing ring is mounted to the front axle of the trailer with three/four axles at speeds of up to 105 km/h (65 mph).

They can be exceeded by 10% for full trailers with two axles.

In case of speeds below 30 km/h (18 mph) the axial loads can be exceeded by 20%.

If required axial loads exceed the data permitted for turntables of series HE/SO, please ask for slewing rings of series KDL900, which allow axial loads up to 250 kN.

In case of use above the steered axle and above the fifth wheel on semi-trailers with rear axle steering please enquire as to the load data giving details of the vehicle.

The load limits are only valid for operation on paved roads and under conditions prevailing in Europe.

See reverse for fitting and maintenance instruction

The right to alter specifications is reserved

Fitting and Maintenance Instructions for HE & SO

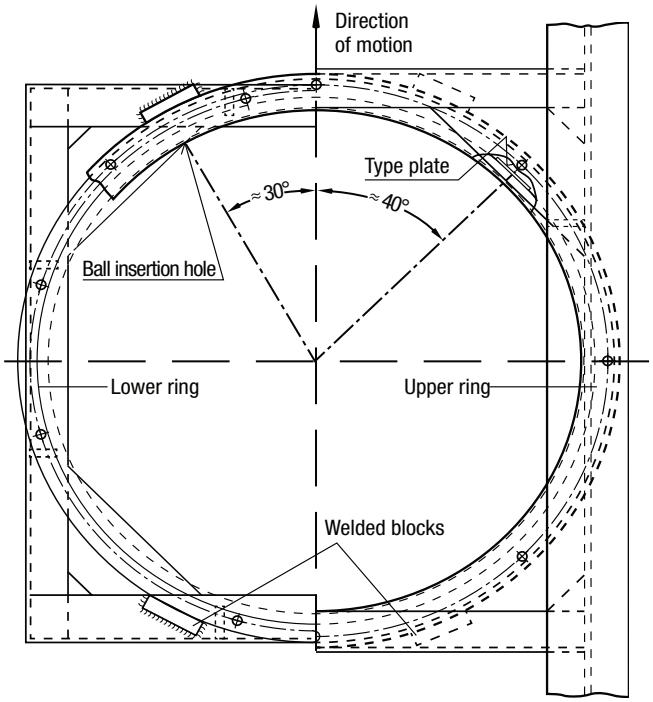

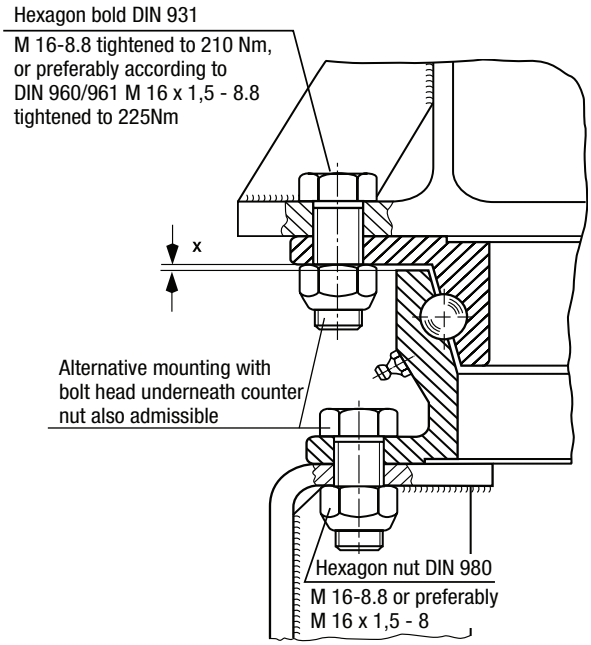

1. The ball bearing turntable must be mounted on a completely flat (max. unevenness 1mm) and horizontally and vertically rigid base with at least 50% of the circumference adequately supported. Particular attention must be paid to the support of the web section area containing the ball bearing races. Any unevenness under the flanges can be corrected with metal strips or by filling in with plastic material.

2. Each flange must be attached with at least 8 high tensile bolts, M 16 x 1,5 of grade 8.8. Do not drill in the area of the type plate ball insertion hole which should be at less than 30° to the direction of travel. In case of operation under adverse conditions, we recommend the use of bolts with enlarged contact surface (such as Tensi Lock or Verbus Ripp), or to increase the number of bolts from 8 to 12 per flange. This applies in particular to type HE130022 The thickness of paint between turntable and frame should not exceed 50 mm to guarantee the fit to be friction-tight.

3. To ease the shear load on the mounting bolts at least four blocks should be welded on immediately adjoining each flange. The ball bearing turntable must not be mounted by means of welding.

4. **JOST** ball bearing turntables are suitably lubricated before they leave the factory, Before the trailer is put into operation for the first time, however, they should be re-lubricated with a high quality lithium saponified turntable grease of NLGI class 2 through all the grease nipples. The re-lubrication should build up a collar of grease in the gap between the 2 rings of the turntable thus preventing ingress of grit and water into the ball race. If a central lubrication system is to be used the quantity of lubrication nipples should be increased (please specify when ordering) and the above mentioned grease specification observed, however NLGI consistency class min 1.

5. The ball bearing turntable must be lubricated according to use but at least once a month with a high quality lithium saponified turntable grease of NLGI class 2. lubricant suitable for the type of operation and the prevailing operating conditions. While lubricating the A-frame should be turned so that the grease is evenly distributed and a collar of grease is being built up in the gap between the 2 rings. The tightness of the mounting bolts should also be checked.

6. Ball bearing turntables are subject to wear. The limit of wear is reached when there is 3,5 mm axial play. This is the case at the very latest when the air gap X = 0 mm at any point on the circumference of the turntables.

Drilling pattern for ball bearing turntables

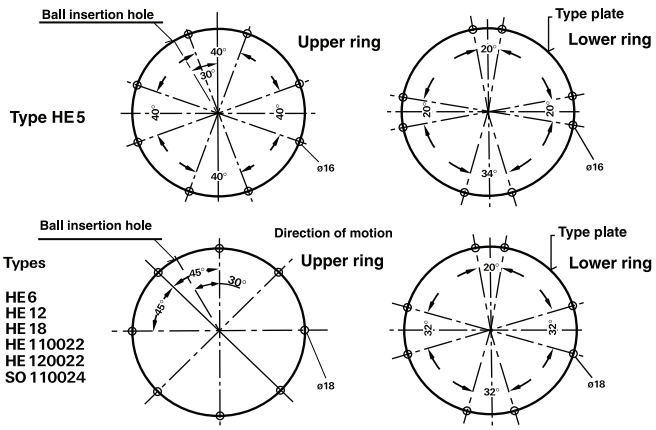

Slewing ring – Series KDL9006W

Low Profile Ballrace Models

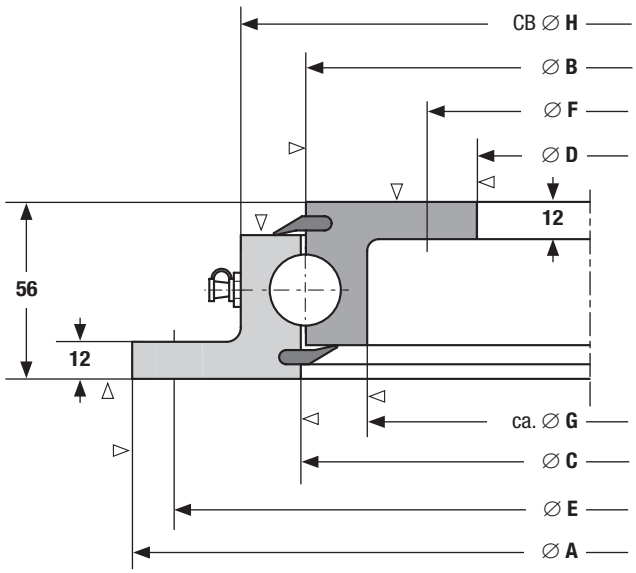

▽ = shaped profile

Model

KDL9006W Supplied Pre-Drilled
Typical applications: **Fridge Vans Stock Crate**
D-Value Rating*: **240kN**

- Slewing rings are supplied primed for corrosion protection.
- Material C45.
- Ball race hardened.
- 8 conical lubrication nipples AM 8 × 1 according to DIN 71412.

*As tested in a JOST assembly

The below axial loads are applicable if the slewing ring is mounted to the front axle of a trailer at speeds of up to 105 km/h (65 m.p.h.). If it is to be used in self steering systems or above a fifth wheel please contact us for the maximum permissible loads by submitting construction data.

Type	∅ A mm	∅ B mm	∅ C mm	∅ D mm	∅ E mm	∅ F mm	∅ G approx. mm	∅ H approx. mm	Weight approx. kg	Axial load kN
KDL9001	520	409	412	302	490	332	371	451	25	40
KDL9002	650	539	542	432	620	462	501	581	32	80
KDL9003	750	639	642	532	720	562	601	681	38	120
KDL9004	850	739	742	632	820	662	701	781	44	150
KDL9005	950	839	842	732	920	762	801	881	50	180
*KDL9006W	1050	939	942	832	1020	862	901	981	56	210
KDL9007	1200	1089	1092	982	1170	1012	1051	1131	65	250

The measurements are subject to our standard tolerances.

Fitting and Maintenance Instructions for Slewing Rings KDL900/6W

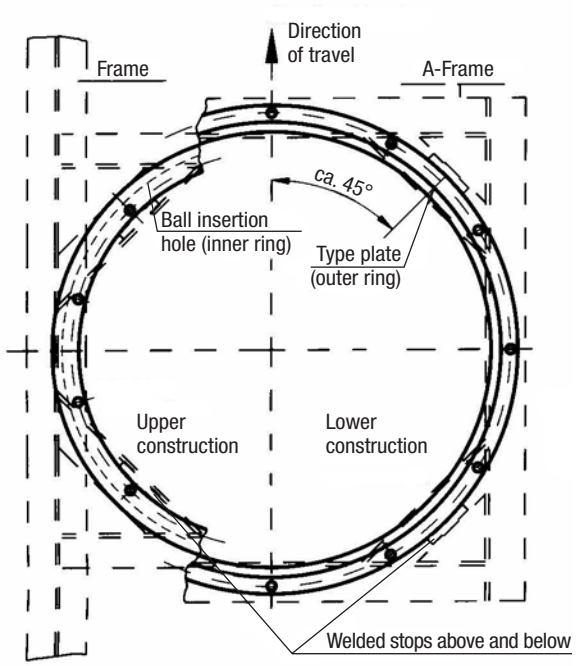

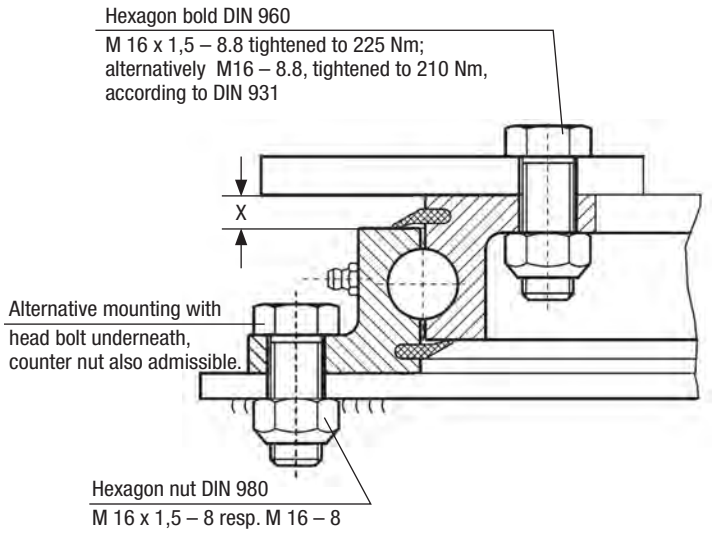

1. The slewing ring must be mounted on a completely flat (max. unevenness 1mm) and rigid base with at least 50% of the circumference adequately supported. Particular attention must be paid to the support of the web section area containing the slewing ring races. Any unevenness under the flanges can be corrected with metal strips or by filling in with plastic metal.

2. Each flange must be attached with at least 12 high tensile bolts M 16 × 1,5 of at least grade 8.8. Do not drill in the area of the ball insertion hole, which should be at less than 45° to the direction of travel. The thickness of paint between slewing ring and mounting should not exceed 50 microns to guarantee the fit to be friction-tight.

3. To ease the shear load on the mounting bolts in the case of horizontal force at least 4 blocks should be welded on immediately adjoining each flange. The slewing ring must not be mounted by means of welding.

4. **JOST** slewing rings are initially lubricated before they leave the factory. Before they are put into operation for the first time however they must be adequately re-lubricated with ball bearing grease (lithium saponified, NLGI class 2). Whilst lubricating the slewing ring should be turned so that the grease is evenly distributed. If a central lubrication system is to be used we recommend increasing the number of grease nipples (please state on order) and using a high quality lithium saponified ball bearing grease of at least NLGI class 1.

5. The slewing ring must be lubricated according to use but at least once every 3 months or 25,000 km, using a high quality ball bearing grease (lithium saponified, NLGI CLASS 2). Whilst lubricating the A-frame should be turned so that the grease is evenly distributed.

   The tightness of the mounting bolts should also be checked at regular service intervals.

6. Slewing rings are subject to wear. The limit of wear is reached when the axial play is 3.5 mm. This is at the latest the case when the distance X < 8 mm at any point on the circumference.

Wear Limits
Radial play - max. 3.0mm
Axial play - max. 2.5mm

Slewing ring - Series KLK

Double Row Ballrace Models

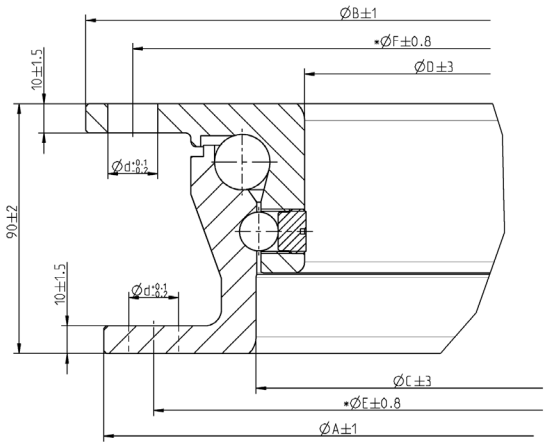

Model

Double Row Ballrace KLK Series
Typical applications: Dairy Tankers, Tri Axle Tippers
D-Value Rating: 275kN

- Ballraces are supplied E-coated.
- 8 lubrication points enable the best possible distribution of grease.
- Lbryrinth seal.
- Supplied drilled/undrilled.

The specified axle loads for KLKDR series relate to use where the slewing ring is mounted on the front axle of a trailer with three axles and fifth wheel steering, travelling at speeds of up to 100kph (65mph). On dual-axle trailers, the specified axle load can be exceeded by 10% of 20% at speeds below 30kph (18mph).

Type	Imposed load (T)	A (mm)	B (mm)	C (mm)	D (mm)	E (mm)	F (mm)	d (mm)	Weight kgs
KLKDR41AS010K	26	987	1000	868	842	952	966	18	73
KLKDR4100010K	26	987	1000	868	842	undrilled	undrilled	N/A	73
KLKDR210010K	26	1095	1108	976	950	1060	1075	N/A	80
KLKDR110020	26	1095	1108	976	950	1060	1074	18	80
KLKDR4200010K	26	1095	1108	976	950	1060	1074	N/A	80
KLKDR4400010K	30	1195	1208	1076	1050	1160	1074	N/A	92

Note: The pre-drilled hole pattern on the KLKDR41AS010K is suited only for a DR assembly replacement.
Other ballraces are undrilled as standard. For any special drilling requirements please contact JOST Australia.
Note: The above ratings are in accordance to ADR requirements.
The measurements are subject to our standard tolerances.

Design and Features

The ball bearing turntables enable the rotation of the pivot support towards the trailer frame. Thanks to the functional design, the axial loads are ideally supported and the thrust and tractive forces which occur when driving are transmitted in an optimal fashion.

The advantages at a glance:

Premium force transmissions for the highest demands

- The extra large support balls transmit the axial loads ove a wide area directly onto the vertical bar of the ring parts
- Horizontal forces in pull or push direction, as well as the moment load resulting from braking and centrifugal forces, are supported by the interplay of the two ball rows
- Lifting forces are transmitted by the smaller radial ball
- Optional fastening using splined bolts, making additional welding of thrust plates unnecessary

Durable construction with very little wear

- The use of high-strength steel ensures the greatest possible surface quality
- Cold-twisting of tracks by shrinking the ball gearing turnable reduces wear to a minimum and increases lifespans significantly
- A robust labyrinth seal protects the tracks from dirt, even in extreme conditions
- The practiculary large grease reservior resulting from the free space between the tracks guarantees smooth running thanks to opium lubrication.
- 8 lubrication points enable the best possible distribution of grease within the tracks with just minimal rotation (+/- 20°) during lubrication.
- Optionally available with pre-assembled lubrication block to ensure ideal access to the lubrication points or as preparation for connection to a central lubrication system.

Note: D-values may vary when used in conjunction with additional JOST products that have been tested and carry a CRN number. Contact your local JOST branch for further details.

Fitting and Maintenance Instructions for Slewing Ring KLKDR

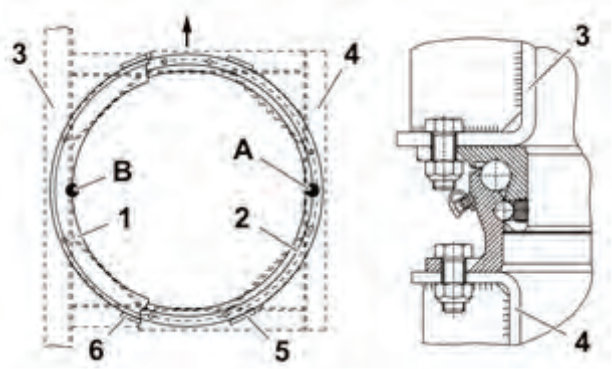

1. Upper ring
2. Lower ring
3. Chassis
4. A-frame
5. Thrust plates bottom
6. Thrust plates top

A. Position of the type plate

B. Position of the ball earing filling hole

1. Standard mounting.

The ball bearing turntable must be fitted on a flat (max. offset 1mm) support construction that provides torsional, longitudinal and lateral rigidity. To ensure there is an adequate transfer of force, at least 50% of the flange surfaces must be supported with weight-bearing structures. The bearing zone must be distributed evenly in and lateral to the direction of travel and be designed so that the ball bearing turntable is supported in the area of its vertical profile bars, i.e the ball race-ways. Larger planarity deviations can be compensated with shim panels. With undrilled turntables, the following must be noted with drilling the fastening holes.

- That no drill chips or cutting fluid gets into the raceway.
- That no holes are drilled in the vicinity (+/- 15mm) of the ball insertion hole or in the vicinity of the welds.
- That the type plate is placed at 90 degrees to the right of the vehicle and the ball insertion hole is placed at 90 degrees to the left of the vehicle to remove the smaller cross-sections from the area under maximum stress.
- The lubricating nipples are easily accessible.
- Free motion of the swivel movement is ensured.

2. Assembly

Series	Screws of quality class 8.8	Torque[1)]
DR	Min. 8 hexagon screws per ring section	
	DIN EN ISO 8765/8676 (DIN 960/961) M16 x 1.5	225 Nm
	Alternatively DIN EN 24014 (DIN 931) M16	210 Nm

[1)] Setting value, tighten the screw connection with torque wrench DIN EN ISO 6789, class A or B.

Series	Nuts of quality class 8
DR	DIN EN ISO 7042 (DIN 980)

Thrust plates

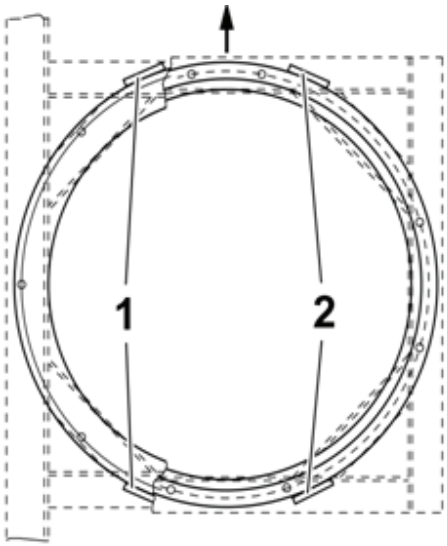

Special fastening

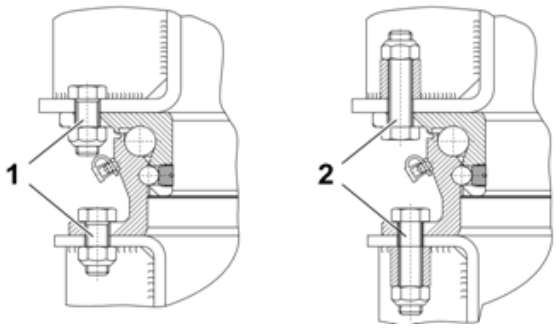

Notes on fastening

Screws of strength class 8.8 must be used for fastening. The screw connections must be secured using state of the art methods to prevent them coming loose.
Do not secure the ball-bearing turntable by welding.
In general, the layer thickness of the paint build-up must be no more than 170 µm per component in the screws grip area so that a perfect friction lock is guaranteed without settling.

The values shown are guide values for a coefficient of friction µtot. = 0.14. Further information is available in VDI 2230.
Tighten screws with a suitable tool diagonally. In case of fastening with a low number of screws or small screw size, at least the same overall stability must be achieved.

In more arduous operating conditions, we recommend installing screws with a spacer sleeve or increasing the number of screws in order to maintain the correct pre-tensioning force.
With different screw connections, as shown in position (1) and (2), free movement of the turntable must be absolutely guaranteed, especially in the area of the lubricating nipples and the type plate.

Special fastening with JOST splined bolts (fastening without thrust plates)

When used on single axle bogie steering systems at axle loads of up to 10t, the standard hole patterns can be used as per the JOST product data sheet in combination with splined bolts for attachment to the vehicle without the use of thrust plates.If the axle load of the bogie is greater than 10t, we recommend using at least 12 securing points per ring, distributed as evenly as possible, with splined bolts.In order to ensure that the fitting of the turntable or slewing ring is under as little strain as possible, a positional accuracy for the hole pattern of 0.6mm and a drilling diameter of 18 +/-0.1, should be observed.More detailed information can be found in our installation instructions for JOST splined bolts.

Thrust plates

To relieve the thrust force on screws subject to horizontal forces, the fitted ball bearing turntable must be attached to the flanges with four pre-welded thrust plates and there must be no play between the components. Use the welding methods set out by the trailer's manufacturer for this purpose. In cases of special fastenings with JOST splined bolts there are no trust plates required, if the requirements specified in 'special fastening' are met.

Coating

The JOST DR series has a permanent cathode dip coating. The CDC offers the ideal surface sealing method and therefore excellent protection against corrosion. Thanks to the evenly thin coating, it may be painted over at any time.

Standard Mounting

Fastening set KLE0000500 (16 screws M16 x 1.5 x 55 - 8.8, 16 nuts M16 x 1.5 – 10 and 8 thrust plates.

Special fastening with JOST splined bolts

Min. 8 JOST splined bolts M16 x 55-10.9 per ring section and matching JOST nuts M16-10.9, tightening torque 300Nm.
Fastening set KLE0000300 (16 splined bolts and nuts)
Fastening set KLE0000400 (24 splined bolts and nuts)

Standard ball bearing turntables

Standard ball bearing turntables are supplied with light basic lubrication. Before commissioning, the turntable must be given a thorough re-lubrication over all lubricating nipples with a high quality rolling bearing grease (lithium soap, NGLI consistency class 2), with a closed bead of grease sealing the bearing clearances against the penetration of dirt and spray water. We recommend the use of JOST high performance lubricant (SKE005670000). Where a central lubricating system is used, a high quality rolling bearing (lithium soap, NLGI consistency class min. 1) should be used. At least 6 lubricating nipples should be connected.

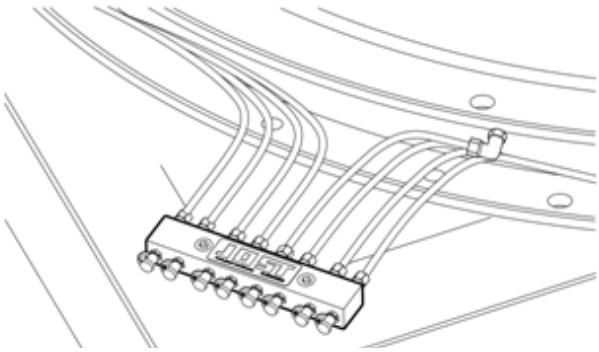

Maintenance

The ball bearing turntable must be lubricated at least every 8,000 to 10,000km, or once a month, with a high quality rolling bearing grease (lithium soap, NLGI consistency class2).
This is done by swivelling the bogie backwards and forwards until as closed a bead of grease as possible comes out from the entire length of the bearing clearances or sealing lips.
We recommend the use of JOST high performance lubricant (SKE005670000).

- If the ball bearing turntable is used in forced steering systems, the servicing instructions of the manufacturer must be observed.
- The screw connections must be checked as part of the vehicle inspections, but no later than 50,000km, to ensure they are tightened to the prescribed tightening torque.
- Check for wear.
- Ball bearing turntables and their fastening elements, must be checked for excessive corrosion, damage or cracks.

To check for wear

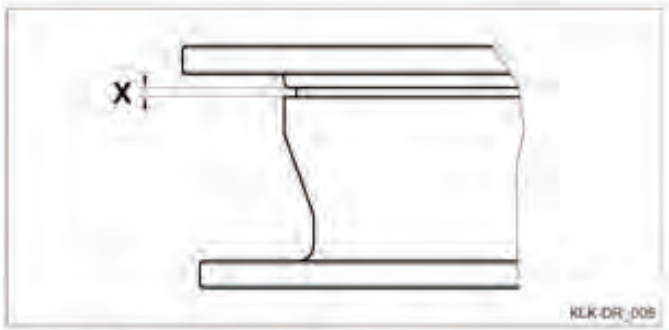

Series	Maximum axial play	Minimum air gap X
DR	3.5 mm	0.0 mm

Safety information for maintenance

- Only use the specified lubricating grease for servicing work.
- The servicing work should only be completed by trained personnel.

Safety information for installation

- Do not change the installation area defined by the trailer's manufacturer.
- The assembly work may only be completed by authorised specialists.
- Instructions from the trailer's manufacturer must be observed e.g. the type of fastening and support construction.
- The installation guidelines provided by the trailer's manufacturer must be complied with.

Advice

Technical modifications reserved. The latest information can be found at www.jostaustralia.com.au or www.jost-world.com

Ball Race (Slew Ring) Service and Maintenance Bulletin

Note: JOST ball races are initially lubricated before they leave the factory. Before they are put into operation for the first time however they must be adequately re-lubricated with ball bearing grease.

Recommended grease types

JOST ball races – Lithium Saponfied, NLGI class 2. (Use class 1 grease if a central lubrication system is to being used)

BPW Double Row – BPW special long life grease ECO-Li 91 Lithium Complex Grease.

The grease must not be mixed with other calcium base or sodium base lubricants.

Ball races should be lubricated at least every 25,000klm or every 3 months, or sooner depending on the application. Under extreme or arduous operating conditions greasing may be required weekly. The ball race should be rotated during greasing to ensure that the grease is distributed evenly.

The tightness of the mounting bolts should also be checked at regular service intervals.

Ball races are subject to wear. It is recommended that the ball race be replaced when the wear limits are reached.

Jost KDL	900/6 Radial Play max 3.0mm – Axial Play max 3.5mm (< 01.2010)
Jost KDL	900/6W Radial Play max 3.0mm – Axial Play max 3.5mm (> 01.2010)
	Refer to Figure 1: (Y New Ball Race 11mm) (X Measurement =7.5mm has reached wear limit)
BPWDK9014	Radial Play max 2.0mm – Axial Play max 3.0mm (< 06.2012)
Jost KLK DR Series	Radial Play max 2.0mm – Axial Play max 3.0mm (> 06.2012)
	Refer to Figure 2: (Y New Ball Race 3mm) (X Measurement = 0mm has reached wear limit)

Note: X and Y measurement pictured below refer to axial movement

KDL900 Series

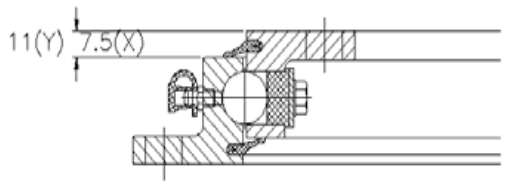

KLK DR & DK9014 Series

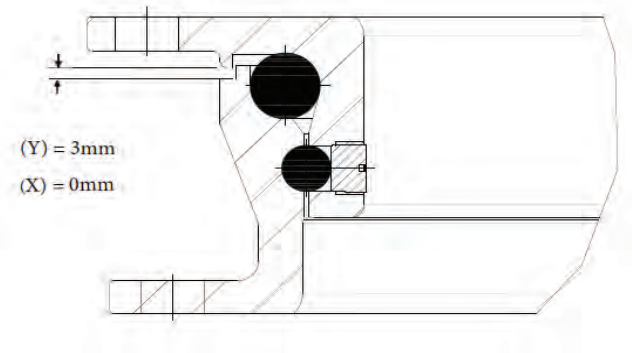

JOST ball bearing turntables
Innovative technology, proven quality

Ball bearing turntables and slewing rings are parts for fitting onto trailers and agricultural vehicles to connect the A-frame to the trailer chassis so it can swivel. They are the products which started the success story of JOST in 1952. Today, they are used on all the world's roads. And not only that: They are also used in agriculture, at airports and railway stations, in mining and in a wide range of special applications, such as in TRIDEC forced steering. The ball bearing turntables are subject to constant further development, so that they impress with their innovative benefits and proven quality time and again.

E-coating

- Premium corrosion protection
- Additional top coat on request

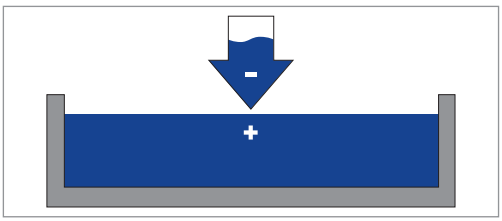

Verified safety

- Tested in accordance with ECE R55
- Environmental management in accordance with ISO 14001
- Quality management in accordance with ISO/TS 16949

Weight advantage

- Up to 10 kg lighter than comparable products

Splined bolt

- Assembly kit with special screws, making use of additional welded thrust plates unnecessary
  Item number KLE0000300 (16 pieces)
  Item number KLE0000400 (24 pieces)



Mounting kit KLE0000500

Item	Description	per kit
01	Hexagon screw M16x1,5x55	16
02	Hexagon nut M16x1,5	16
03	Stop block	8

Central lubrication manifold

- Makes lubrication easier
- Makes connection to central lubrication system easier Item number KLE0000200



High performance lubricant

- JOST high performance lubricant for initial greasing or follow-up lubrication in a practical refill set
  Item number SKE005670000

Low maintenance

- Low maintenance version for HE and KDL available

Product overview: Ball bearing turntables

Ball bearing turntables KLKHE and SO



E-coated
Standard or low maintenance (HE series)
Drilled or undrilled
Lubrication manifold (optional)
Splined bolts (optional)

Ball bearing turntables KLKL and N



- E-coated
- Undrilled
- L series: Agricultural trailers and transportation devices up to 30 km/h
- N series: Heavy agricultural trailers and light truck trailers over 30 km/h

Slewing ring KDL900



E-coated
Low maintenance
Drilled or undrilled
Hardened bearings
Lubrication manifold (optional)
Splined bolts (optional)

Ball bearing turntables KLKND



- E-coated
- Drilled or undrilled
- Lubrication manifold (optional)

Customer-specific drilling patterns

- Even in small batch sizes

Axial load

Series

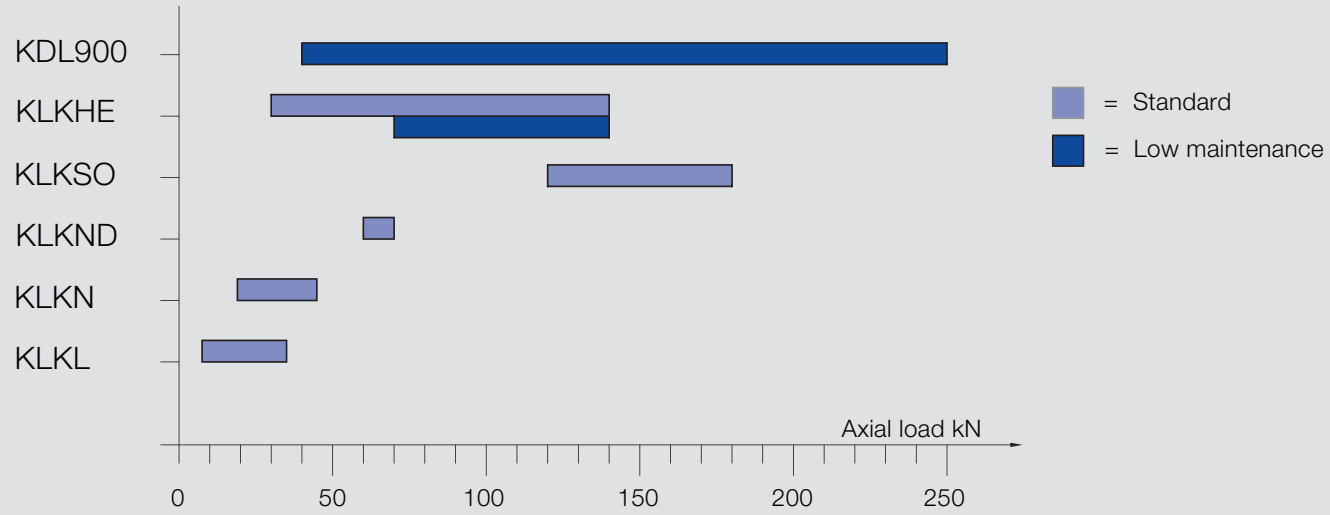

The application of ball bearing turntables and slewing rings depends on the permissible axial load. JOST ball bearing turntables and slewing rings cover an axial load range of between 7.5 and 250 kN.

All load data for the KDL, HE, SO, ND, L and N series apply for operation in pivot support steering systems on paved roads and under the transport conditions common in Central Europe.

Maintenance

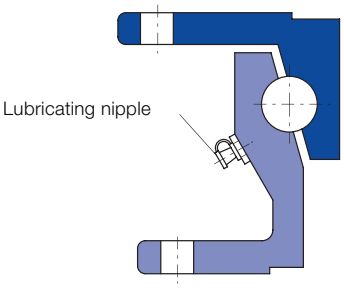

Standard

JOST standard ball bearing turntables are supplied with a thin base coating of lubricant. Before it is used for the first time the ball bearing turntable must be lubricated thoroughly. See JOST installation and operating instructions.

Connection to the central vehicle lubrication system is possible (grease is essential, rather than oil).

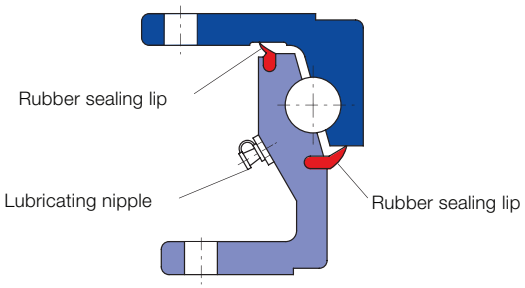

Low maintenance

The low-maintenance versions of ball bearing turntables and slewing rings mean they do not have to be maintained for up to three years or 300,000 km. After this period they must be serviced in the same way as standard turntables. The low-maintenance models are distinguished by a green type plate and by the letter “W” at the end of the item number. Maintenance conditions differ when fitted to steered semi-trailers or in the case of heavy conditions of use. The maximum storage period for maintenance-free ball bearing turntables and slewing rings is three years.

Fifth Wheel Couplings 2" and Mounting Plates





Refer to Jost website www.jostaustralia.com.au for further details and instructional videos.

Operating and Maintenance Instructions for JOST grease type fifthwheels

STOP
DRIVERS ensure that you get a ✓ when coupling!

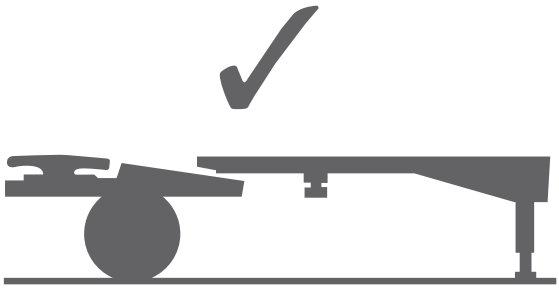

Diagram 1

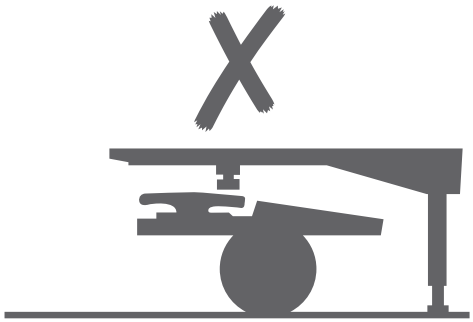

Diagram 2

Failure to ensure that trailer rubbing plate is set **below** the fifthwheel plate when coupling up could result in loss of your trailer or damage to your truck or trailer.

Regardless of whether you have air or spring suspension, ALWAYS follow the coupling CODE to ensure the king pin is securely engaged with the fifthwheel. This following coupling CODE is issued by **JOST** Australia Pty Ltd.

The Coupling Code

The fifthwheel must be angled down to the rear of the truck and the mechanism in the pre-set position.

Ensure that the trailer rubbing plate is below the height of the fifthwheel plate (refer Diagrams 1 and 2).

Reverse the truck slowly under the trailer, aligning the king pin with the centre of the fifthwheel.

Continue reversing until the mechanism locks and secures the king pin.

Pull forward against the trailer brakes to ensure engagement of the king pin in the fifthwheel.

Visually check to see that there is no gap between the fifthwheel plate and trailer rubbing plate and that the king pin is secured correctly within the fifthwheel mechanism.

Finally, ensure that the automatic secondary locking device is engaged (as per Diagram 3). If it is not engaged, the whole coupling up procedure must be repeated.

Note: Pending the fifthwheel model, coupling code may vary.

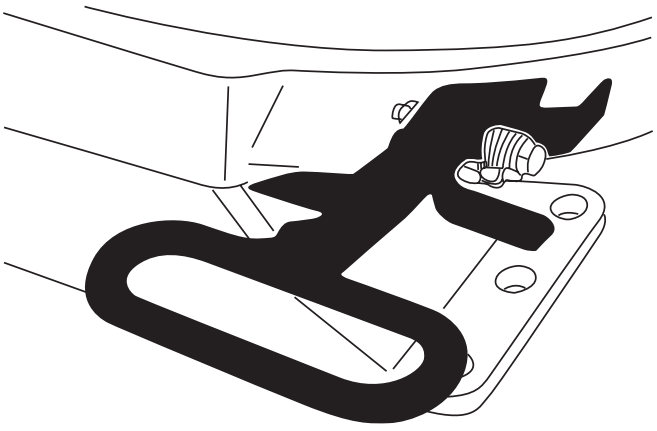

Diagram 3

Failure to read, understand and follow the important information contained above may result in a hazardous condition or cause a hazardous condition to develop.

Operating and Maintenance Instructions for JOST greaseless fifthwheels

STOP
DRIVERS ensure that you get a ✓ when coupling!

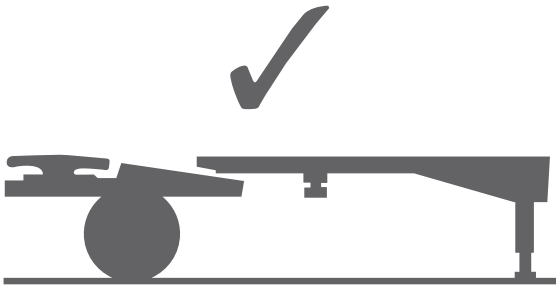

Diagram 1

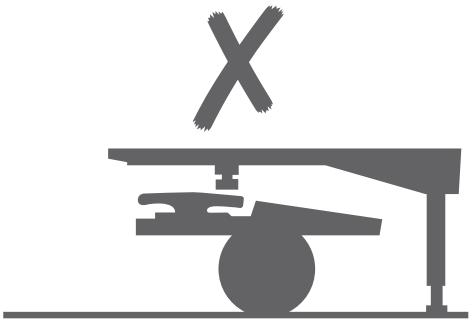

Diagram 2

Failure to ensure that the trailer rubbing plate is set level with the fifthwheel plate when coupling up, could result in loss of your trailer or damage to your truck or trailer.

Regardless of whether you have air or spring suspension, ALWAYS follow the coupling CODE to ensure the king pin is securely engaged with the fifthwheel. This following coupling CODE is issued by **JOST** Australia Pty Ltd.

The Coupling Code

The fifthwheel must be angled down to the rear of the truck and the mechanism in the pre-set position.

Ensure that the trailer rubbing plate is level with the height of the fifthwheel plate (refer Diagrams 1 and 2).

Reverse the truck slowly under the trailer, aligning the king pin with the centre of the fifthwheel.

Continue reversing until the mechanism locks and secures the king pin.

Pull forward against the trailer brakes to ensure engagement of the king pin in the fifthwheel.

Visually check to see that there is no gap between the fifthwheel plate and the trailer rubbing plate and that the king pin is secured correctly within the fifthwheel mechanism.

Finally, ensure that the automatic secondary locking device is engaged (as per Diagram 3). If it is not engaged, the whole coupling up procedure must be repeated.

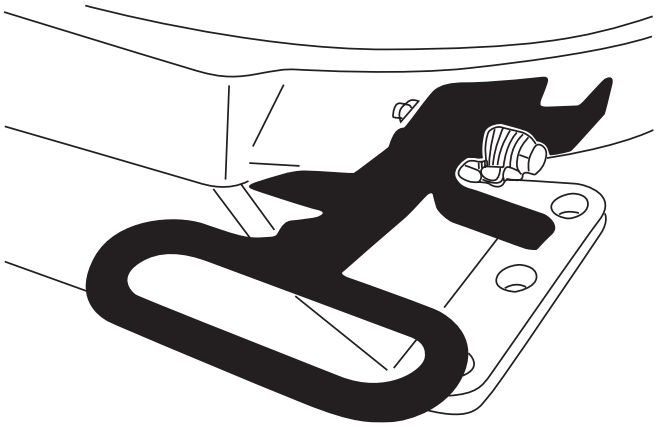

Diagram 3

Failure to read, understand and follow the important information contained above may result in a hazardous condition or cause a hazardous condition to develop.

Locking device

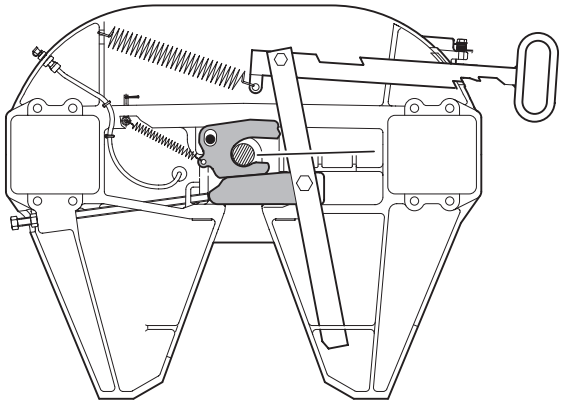

Locked with spring latch closed

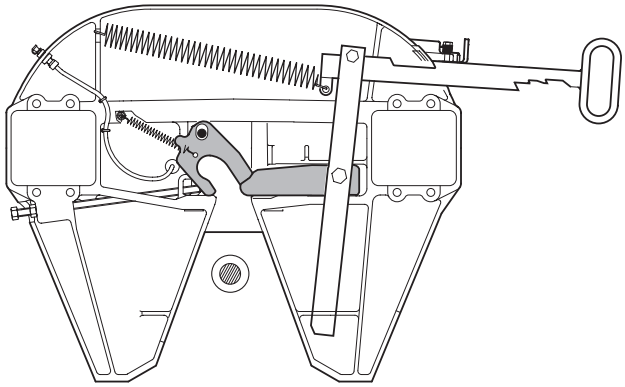

Set for coupling

- Automatic setting to couple up
- Fully adjustable wear
- Easy maintenance

Type of mounting

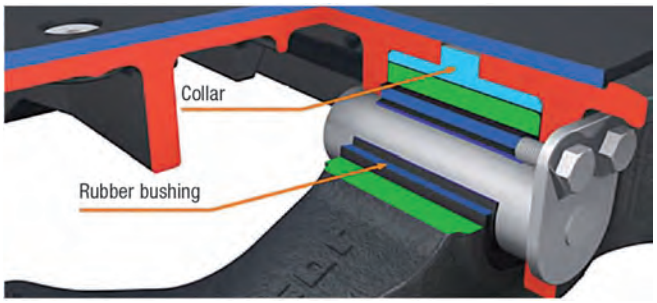

E = Pivot bearing mounting
Slack and maintenance free.
Oil and grease resistant

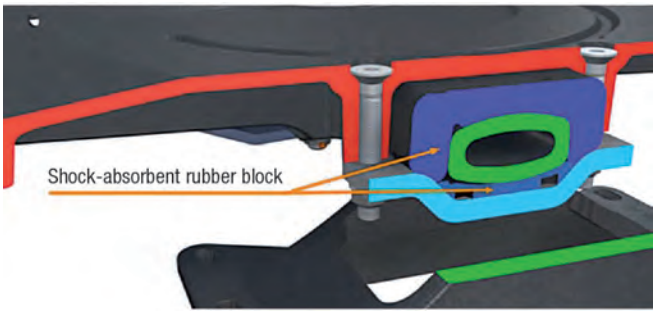

C = Rubber mounting
Shock absorbing by large rubber pads.
Slack and maintenance free.
Oil and grease resistant

Low Maintenance Fifth Wheel Couplings JSK37

Selection criteria, maintenance, mounting instructions and user information for the top plate liner

Coupling Code

The fifth wheel must be angled down to the rear of the truck and the mechanism in the present condition. Ensure that the trailer rubbing plate is level with the height of the fifth wheel plate. Reverse the truck slowly under the trailer aligning the king pin with the centre of the fifth wheel.

Continue reversing until the mechanism locks and secures the king pin. Pull forward against the trailer brakes to ensure engagement of the king pin in the coupling.

Visually check to see that there is no gap between the fifth wheel plate and the trailer rubbing plate and that the king pin is secured correctly within the fifth wheel mechanism.

Ensure lock catch is secured in the locked position.

Selection Criteria

The main characteristics of the **JOST** low maintenance fifth wheel coupling JSK37 are there excellent sliding properties (equivalent to a well lubricated fifth wheel) and their long life.

The fifth wheel was designed in particular for articulated vehicles with high mileage which are rarely uncoupled and run for long periods between services, e.g. tankers and tilts.

This high quality, low maintenance fifth wheel will offer you a long life span if you

- Couple up carefully: the fifth wheel should be at the same height as the skid plate
  (air suspension vehicles are advantageous)
- Make sure that the skid plate resp. guide rails to the skid plate are the correct size.
  They should have no sharp edges, steps or welding seams in the coupling up area.
- Ensure a flat, smooth surface of the skid plate and contact area.
- Grease the skid plate lightly to protect it from corrosion. The liner is not adversely affected by grease.

if these points are not observed the liner may be damaged.

Articulated vehicles with more complex load requirements (e.g. on building sites) and/or semi-trailers with rigid chassis (e.g. tankers) are liable to increase wear on the liner.

The liner is bolted onto the fifth wheel and can be easily replaced.

Maintenance of the Locking Mechanism

Lubrication of the liner is not necessary.

The fifthwheel has only one lubrication point for the lock jaw.



Uncouple at the latest every 50,000 Km or six months, depending on usage. Clean the fifth wheel with liner and the skid plate. Check the liner for damage and wear. Lubricate the lock jaw and king pin with high pressure grease (EP) with MoS_2 or graphite additive (e.g. L21M,Esso universal grease M or Shell Retinax AM).

The grease nipple on the edge of the fifth wheel plate is for lubricating the lock jaw and king pin between service.



The life expectancy of the lock jaw and king pin depend on effective lubrication before being put into service and after every cleaning operation.

For further information please refer to the **JOST** repair instruction booklet.

Central Lubrication for 2” Fifth Wheels

Models JSK37 Series

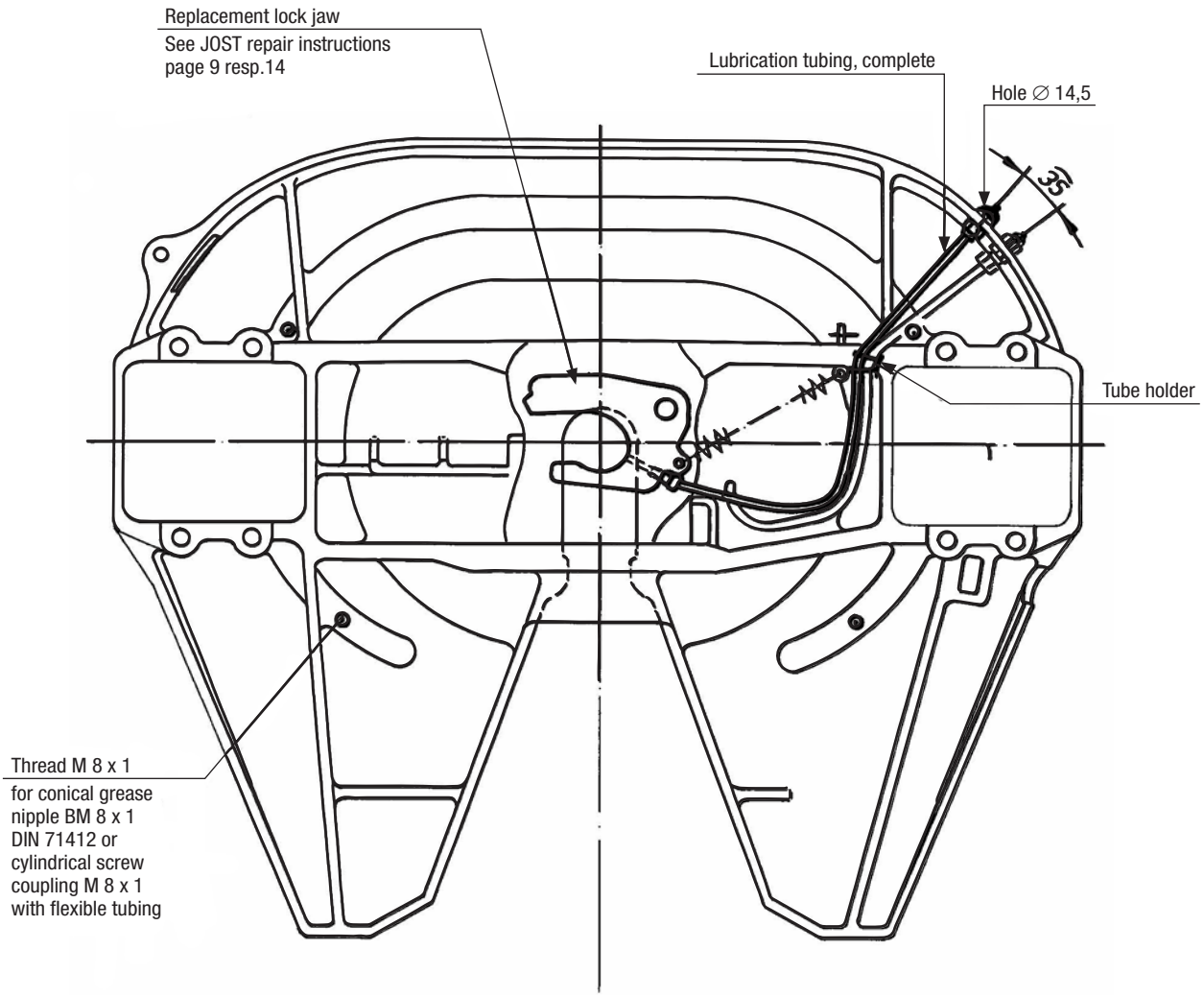

The drawing shows JSK37 C-Z

The fifth wheels JSK37CZ and JSK37E Series are supplied with additional lubrication for the lock jaw and the king pin.

In order to connect the fifth wheels to the central lubrication system of the prime mover it is necessary to replace the 4 grease nipples under the fifth wheel plate and the 2 at the side with suitable screw couplings and connect them to flexible tubing, which is in turn joined up to a distributor unit compatible with the respective central lubrication system.

As a lubricant we recommend grease or liquid grease. Fifth wheels with central lubrication should be thoroughly cleaned and inspected for wear, damage and correct functioning at least once a year, or at the latest after 50,000 km, and repaired if necessary. Before coupling up again the fifth wheel and the king pin should be manually lubricated with high pressure grease (EP) with MoS_2 or graphite additive.

LubeTronic

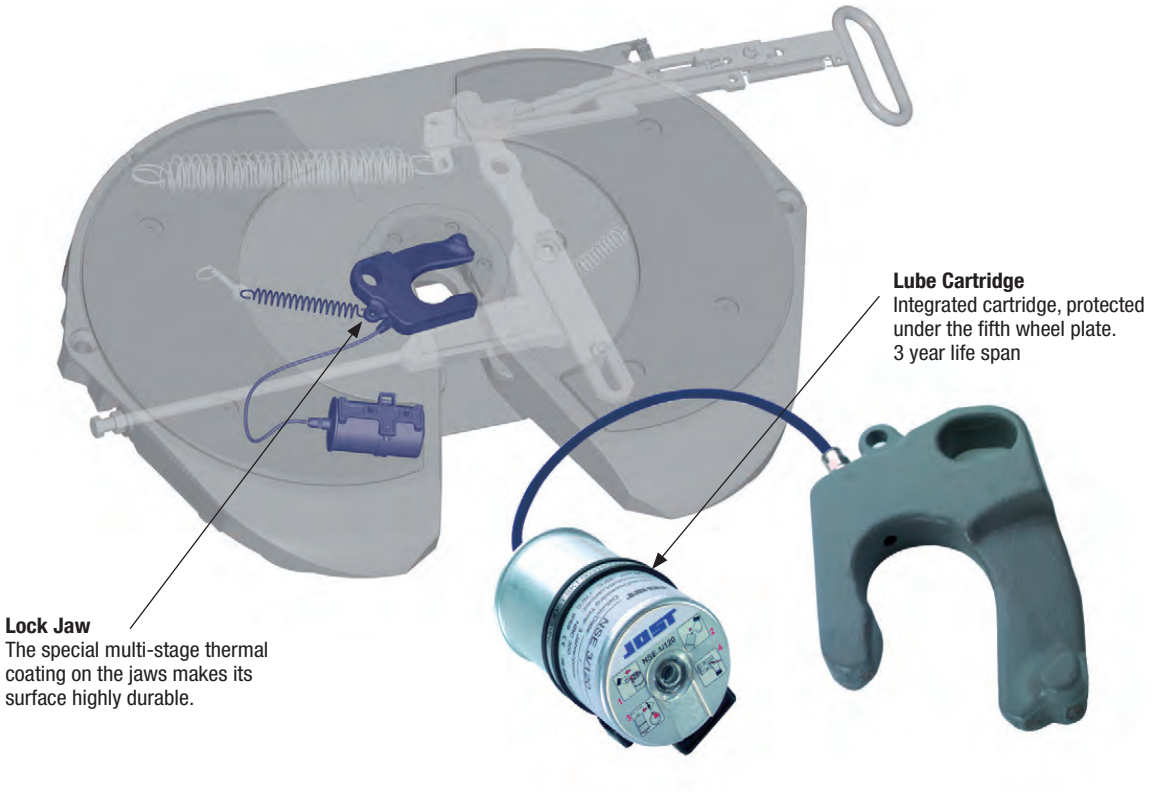

Lubrication of the wheel coupling

Guaranteed safe and automatic for 3 years

JOST, the market leader in the area of couplings for trucks and trailers, remains on it's innovative course. The new development LubeTronic saves time and money and simplifies the day-to-day life of drivers and freight forwarding companies.

Always lubricates safely

- The special coating on the lock jaw makes the surface extremely durable. This allows the lock jaw to be operated with a minimal amount of lubricant.
- Excellant emargency running properties allow the coating to handle short-term operating even without lubricant.
- Outstanding lubricant qualities thanks to novel lubricants from high-performance grease and continuous lubrication.
- Temperature range: -20°C to +70°C
- Electronic dose dispensing reduces both costs and enviromental impact
- Completely sealed and immersion tested (IP 68)

Simple maintenance

- LubeTronic is easy to mount
- Self-regulating system with electronic monitoring signal on the cartridge
- Guaranteed 3 year life span
- Maintenance time savings
- Potential upgrading of all low-maintenance couplings
- Very light and compact
- With shockproof metal bracket
- Not recommended for usage in the construction industry
- Repair kit (complete) with cartridge:
  Order No. SKE004070000

LubeTronic

Less Maintenance - Greater Safety

JOST, the market leader in the area of couplings for trucks and trailers, remains on it's innovative course. The new development LubeTronic saves time and money and simplifies the day-to-day life of drivers and freight forwarding companies.

The lock of the fifth wheel holds the king pin firmly in place; it used to be one of the last maintenance-intensive elements in the system. LubeTronic allows this system to run practically maintenance-free for three whole years. The grease is discharged in a electronically controlled manner; the lock and king pin are always optimally lubricated. **JOST** guarantees automatic and safe operation of the LubeTronic for three years. The lubrication cartridges discharges it's lubricant in a constant, uniform manner over a wide temperature range from -20 to +70 degrees Celsius and the entire system has been underwater-tested according to IP 68.

Simple Assembly - Significant Action

The LubeTronic retrofit kit includes a specially coated lock, which, together with the electronically regulated lubrication cartridge, is a system patented by **JOST**. The coating makes the surface of the lock particularly resistive and durable, so that even minimal quantities of the lubricating grease are sufficient. This is efficient and eco-friendly at the same time. The coating is so efficient that it even allows running without lubricant for short periods, although this is not recommended!

The lock holds the king pin and with it, the entire support system, coupled firmly with the traction engine. So far, regular lubrication by hand or by means of an expensive central lubrication was required, because the lock and king pin wear quickly without lubrication and have to be replaced. The traditional lubrication aids - which are mostly lubricating cartridges operated with overpressure - discharge grease smoothly and uniformly only within a narrow temperature range. All the maintenance procedures for the fifth wheel, which are not only uncomfortable and time-consuming, but above all, relevant for safety, are rendered redundant by LubeTronic.



JSK36 DV1 Pivot Bearing Mount

Pressed Steel



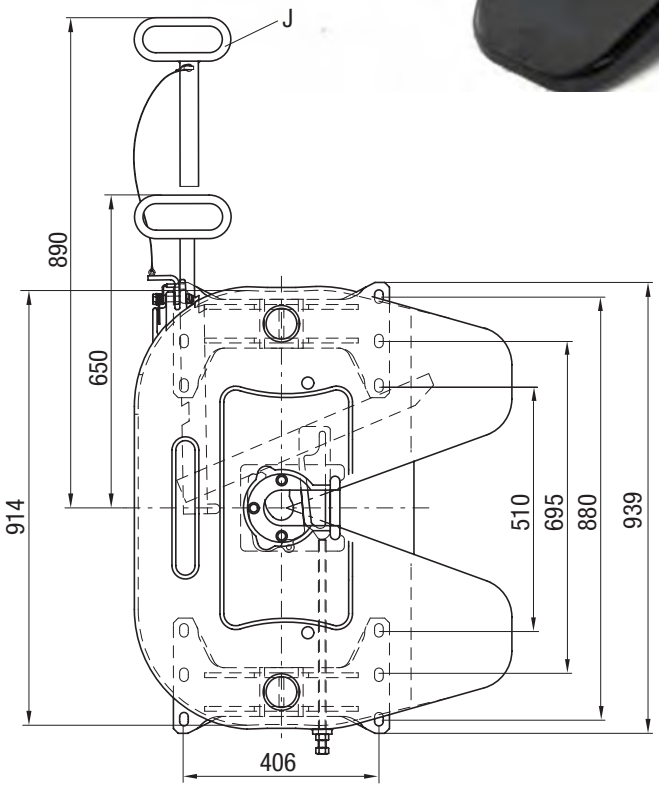

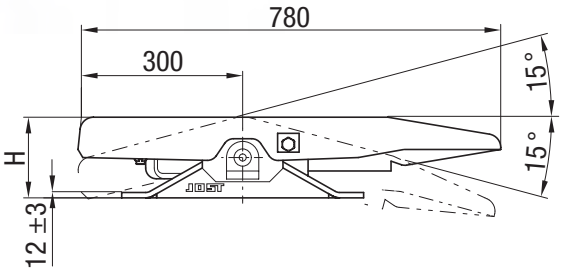

Rubber cushioned pivot bearings

Application: **General Freight**
Tipper work

For use with single trailers and B Double (not Road Train)

D-value	152 kN
Approval Number	E1 55R-01 0301
Weight approx. (for 150mm height)	136 kg (bolt on feet)

Available with Fabricated-weld on Pedestals upon request.

Mounting must be carried out in accordance with our instructions.

Type	Overall Height mm	Imposed Load On Tractor kg	D-Value kN	Weight Approx. kg	Pedestal Style
JSK36DV1130	130	20000	152	112	Weld on
JSK36DV1150	150	20000	152	115	Weld on / Bolt on
JSK36DV1170	170	20000	152	118	Weld on / Bolt on
JSK36DV1185	185	20000	152	118	Weld on / Bolt on
JSK36DV1195	195	20000	152	120	Weld on
JSK36DV1205	205	20000	152	122	Weld on
JSK36DV1215	215	20000	152	125	Weld on
JSK36DV1235	235	20000	152	125	Weld on
JSK36DV1255	255	20000	152	127	Weld on

The right to alter specifications is reserved.

Spare parts for type JSK36DV1

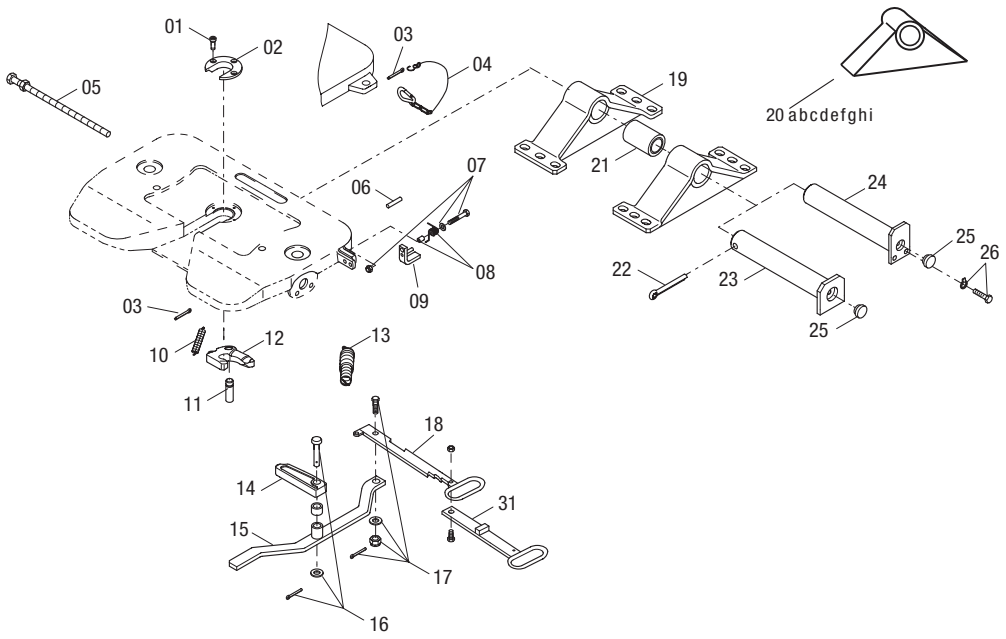

Item	Designation	Order No.	Quantity per JSK
01	Socket head bolt	SK212107	3
02	Wearing ring	SK210519	1
03	Split pin	SK1974	1
04	Spring hook	SK1436	1
05	Adjusting screw	SK270044	1
		SK290551	1
06	Clamping pin	000.003.027	1
07	Hexagon bolt, compl.	SK352103	1
08	Spring noose, compl.	SK292130	1
09	Latch, compl.	SK312152	1
10	Tension spring	SK847	1
11	Pivot	SK210667	1
12	Lock Jaw	SK1489	1
13	Double tension spring	SK310520	1
14	Locking bar	SK290506	1
15	Lever	SK210725	1
16	Bar bolt, compl.	SK292102	1
17	Head bolt	SK1513	1
18	Handle	SK2905111	1

Item	Designation	Order No.	Quantity per JSK
19a	Bolt on Pedestals 150	SK290442	1
19b	Bolt on Pedestals 170	SK290441E	1
19c	Bolt on Pedestals 185	SK929440	1
20a	Fabricated Pedestals 130	SK2920130	1
20b	Fabricated Pedestals 150	SK2920150	1
20c	Fabricated Pedestals 170	SK2920170	1
20d	Fabricated Pedestals 185	SK2920185	1
20e	Fabricated Pedestals 195	SK2920195	1
20f	Fabricated Pedestals 205	SK2920205	1
20g	Fabricated Pedestals 215	SK2920215	1
20h	Fabricated Pedestals 235	SK2920235	1
20i	Fabricated Pedestals 255	SK2920255	1
21	Rubber bushing, compl.	SK290520E	2
22	Split pin	SK292104	2
23	Pivet pin with 22 + 25	SK292124	2
24	Pivet pin	SK290553	2
24a	Pivet pin with 25	SK290499	2
25	Plug	JS 110112	2
26	Hexagon bolts, compl.	SK2921038	2

Repair and Retrofit Kits

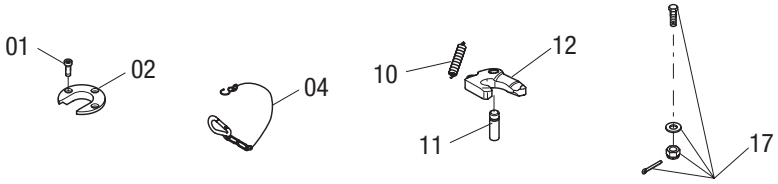

Item	Designation	Order No.
01, 02, 10, 11, 12	Repair kit for lock	SK322150
01, 02	Repair kit for lock	SK212151
10, 11, 12	Repair kit for lock	SK322152
01, 02, 04, 10, 11, 12, 17	Repair kit for lock	SK312150

Item	Designation	Order No.
01, 02, 10, 11, 12, 17	Repair kit for lock	SK312151
07, 08, 09	Repair kit for lock	SK312152

JSK37CZ Rubber Mount

With Wear Ring & External Jaw Lubrication



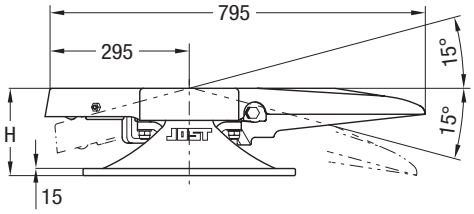

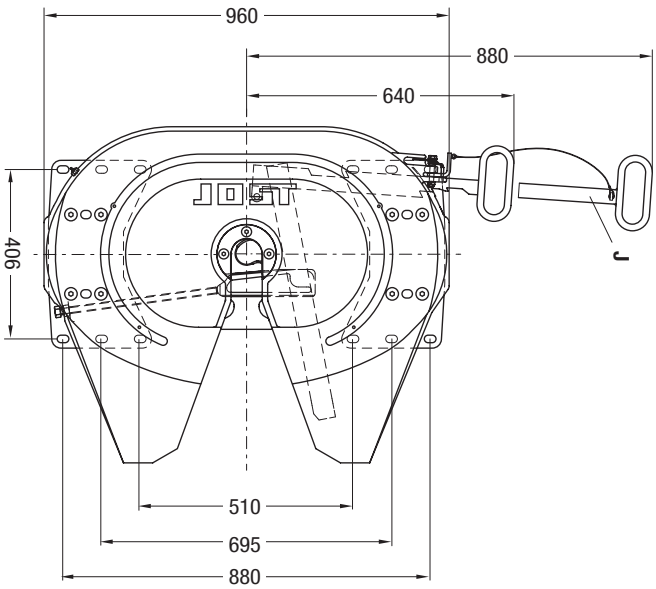

Applications: **Tanker**
General freight
Fridge van
B-double
Road train

The fifth wheel comes standard with bolt on/weld on feet.

The fifth wheel coupling can be linked to the central lubrication system of the prime mover.

Lock jaw and wear ring can be replaced without difficulty in a few minutes with the fifth wheel still in position.

Shock absorbing large rubber pads. Oil and grease resistant.

Mounting must be carried out in accordance with our instructions.

Type	Overall Height mm	Imposed Load kg	D-Value kN	Weight Approx. kg	Approval Number
JSK37CZ/150	150	20000	190	144.5	CTA-041876
JSK37CZ/170	170	20000	190	146.5	
JSK37CZ/185	185	20000	190	148.5	
JSK37CZ/220	220	20000	190	155.5	
JSK37CZ/250	250	20000	190	160.5	
*JSK37CZ/300	300	20000	190	176.5	

* Note 300mm non weldable pedestals

The right to alter specifications is reserved.

Spare parts for type JSK37CZ

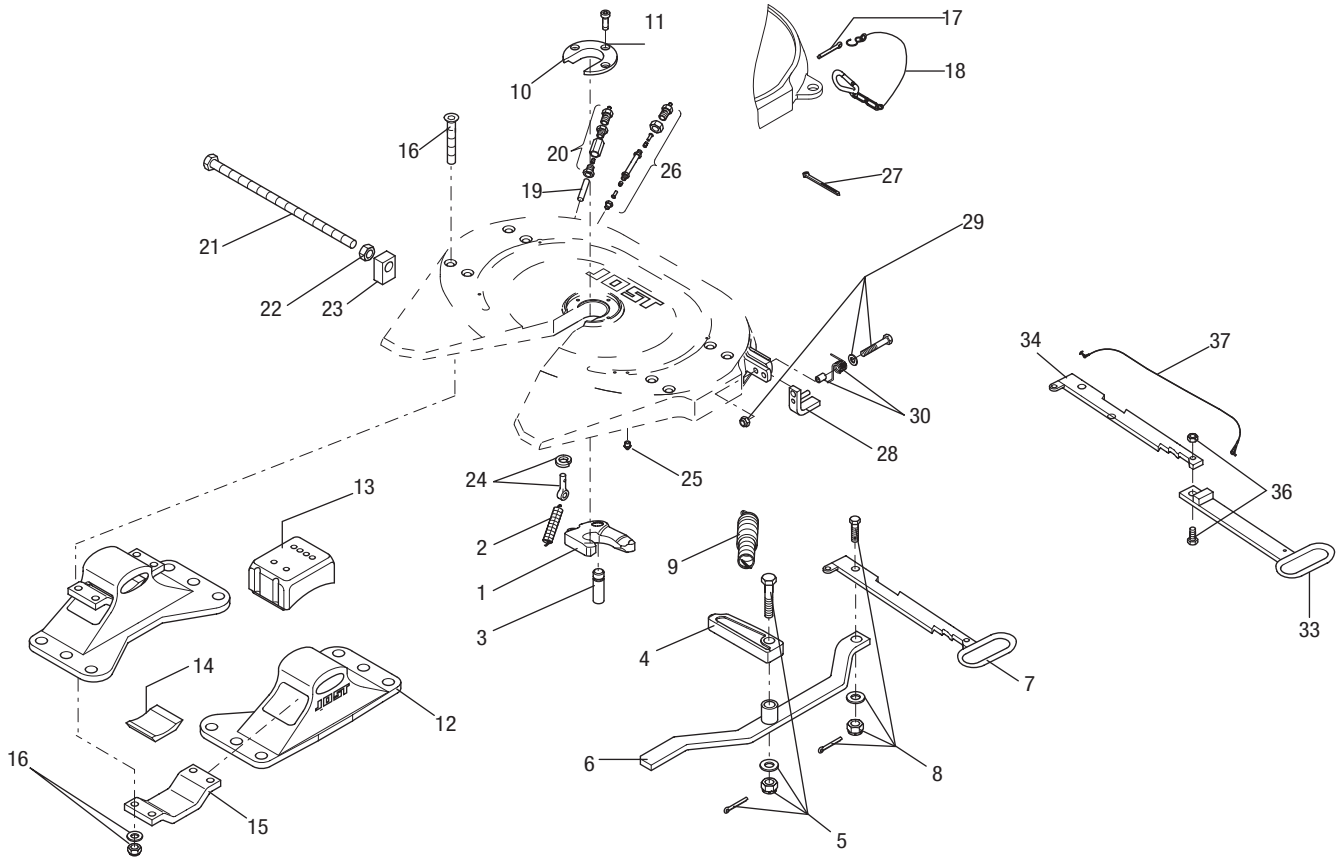

Fig.	Description	Part No.
01	Lock jaw	SK1489Z
02	Lock jaw spring	SK847
03	Pivot for lock jaw, compl.	SK210667
04	Locking bar	SK320506
05	Locking bar bolt, compl.	SK322101
06	Lever	SK310518
07	Operating handle	SK310515
08	Socket head bolt	SK1513
09	Double tension spring	SK310520
10	Wearing ring	SK210519
11	Head bolt	SK212107
12b	Pedestal (150 mm) Bolt on\Weld on	SK210402X
12c	Pedestal (170 mm) Bolt on\Weld on	SK210421X
12a	Pedestal (185 mm) Bolt on\Weld on	SK210401X
12d	Pedestal (220 mm) Bolt on\Weld on	SK210418X
12e	Pedestal (250 mm) Bolt on\Weld on	SK210414X
12f	Pedestal (300 mm) Non Weldable	SK210420
13	Upper rubber cushion	SK1259
14	Lower rubber cushion	SK210525
15	Mounting bracket	SK1372

Fig.	Description	Part No.
16	Socket head bolt, compl. with nut	SK212115
17	Split pin	SK1974
18	Spring hook Pre 1996	SK1436
19	Lubrication fitting steel	SK1989
20	Grease nipple compl	SK1976
21	Adjusting screw	SK310505
22	Hexagon nut	SK212178
23	Guide piece	SK320507
24	Eye bolt comp.	SK212204
25	Grease nipple	SK312111
26	Lubrication tubing nylon	SK310802
27	Tubing clamp	SK312113
28	Spring latch 1996 onwards	SK312152
29	Bolt for spring latch	SK352103
30	Spring for latch	SK312159
33	Handle Extension	SK3105113
34	Internal Operating Handle	SK3105115
35	Head Bolt	SK1513
36	Extended Handle Bolt	SK242150
37	Cable Extension	SK352102

Repair Kits

Fig.	Repair Kits	Part No.
01, 02, 03, 10, 11	Repair kit for locking device	SK322150Z
01, 02, 03, 26	Repair kit for locking device	SK322152Z
01, 02, 03, 08, 10, 11, 18,	Repair kit for locking device	SK312150
13, 14, 16	Repair kit for rubber bearing	SK212169Z
28, 29, 30	Repair kit for spring latch	SK312152 Kit
33, 36, 37	Repair kit for extended handle	SK3121063

JSK37 CX Rubber Mount

With Wear Ring & External Jaw Lubrication



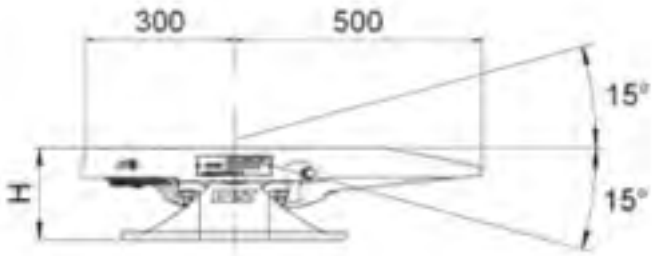

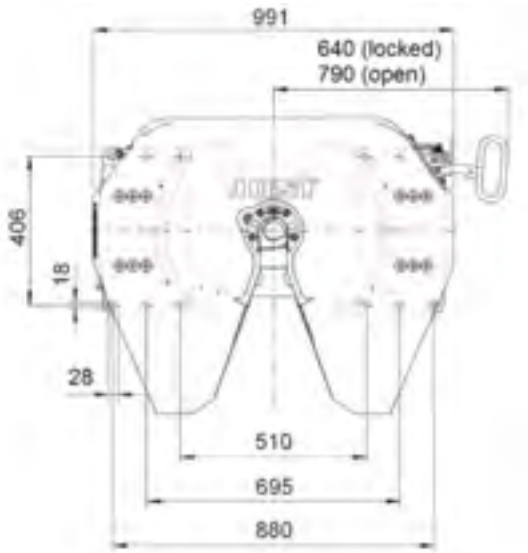

Applications: **Stock crate**
Fridge van
Tanker
B-double
Road train

Sturdier fifth wheel coupling plate, with central relief to avoid load concentration on the coupling system.
A heavy-duty fifth wheel coupling for operation in arduous conditions.
Pedestals fixed by 6 bolts. Hole areas have been reinforced.

Lock jaw and wear ring can be replaced without difficulty in a few minutes with the fifth wheel still in position.
Mounting must be carried out in accordance with our mounting instruction.

Type	Overall Height mm	Imposed Load kg	D-Value kN	Weight Approx. kg	Approval Number
JSK37CX/150	150	24000	240	162	CTA-045374
JSK37CX/170	170	24000	240	168	
JSK37CX/185	185	24000	240	170	
JSK37CX/220	220	24000	240	179	
JSK37CX/250	250	24000	240	182	
*JSK37CX/300	300	24000	240	190	

* Note 300mm non weldable pedestals

Spare parts for type JSK37CX

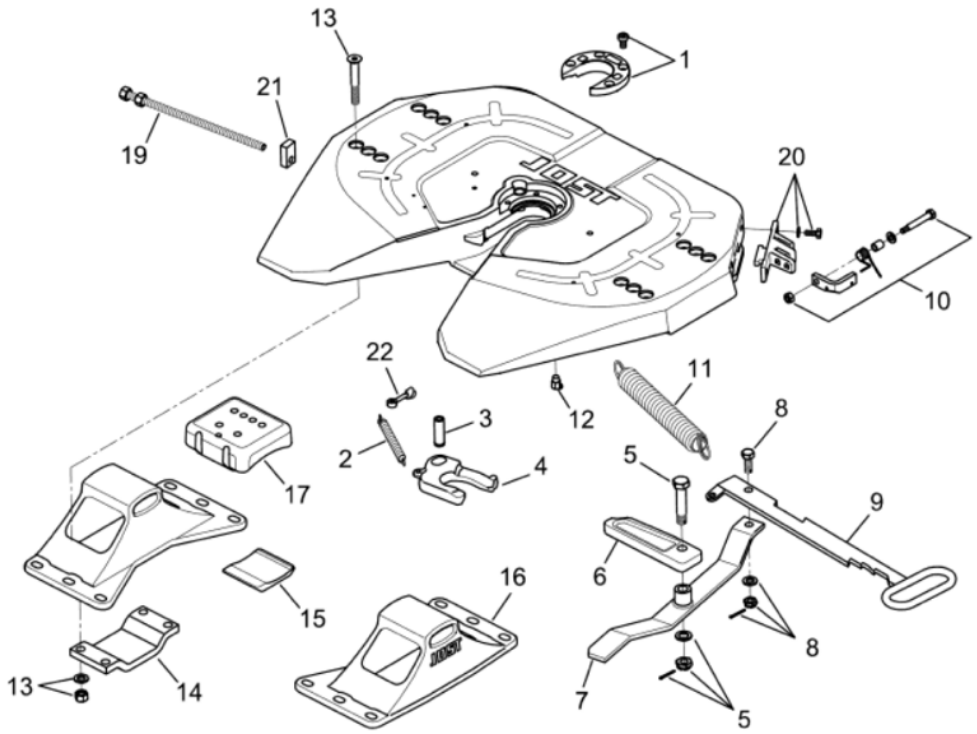

Fig.	Description	Code
01	Wearing ring and bolts	QR00269J00
02	Lock jaw spring	SK847
03	Pivot	SK210667
04	Locking jaw	SK1489Z
05	Bolt (complete)	SK322101
06	Locking bolt	SK320506
07	Lever with bushing	SK310518
08	Head bolt	SK1513
09	Lever handle	SK310515
10	Latch kit	SK312152KIT
11	Double tension spring	SK310520
12	Fitting	SK312111
13	Complete countersunk bolt	SK212115

Fig.	Description	Code
14	Mounting bracket	QR00215J01
15	Lower rubber cushion	SK21025
16a	Pedestal (150mm)	SK210402X
16b	Pedestal (170mm)	SK210421X
16c	Pedestal (185mm)	SK210401X
16d	Pedestal (220mm)	SK210418X
16e	Pedestal (250mm)	SK210414X
16f	Pedestal (300mm)	SK210420
17	Upper Rubber Cushion	SK1259
19	Adjustment screw	AD01148B80
20	Guide latch complete security	QR00270J00
21	Guide with thread	SK320507
22	Pin with eyelet	SK212204

Repair Kits

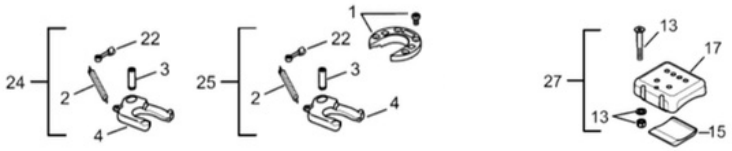

Fig.	Repair Kits	Part No.
24	Locking latch kit - items 2, 3, 4, 22	SK322152Z
25	Kit locking claw - items 1, 2, 3, 4, 22	SK322150CX
27	Base plate fastening kit - items 13, 15, 17 (with 4 screws)	SK212169CX

JSK37 CXW Rubber Mount

With Wear Ring & External Jaw Lubrication

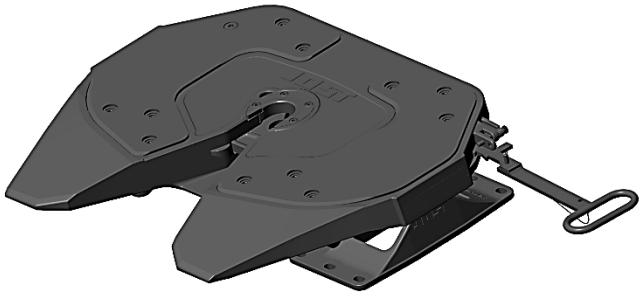

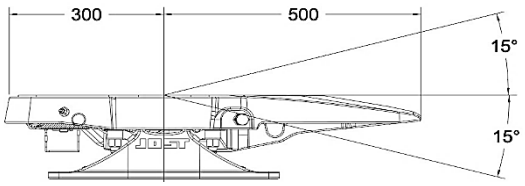

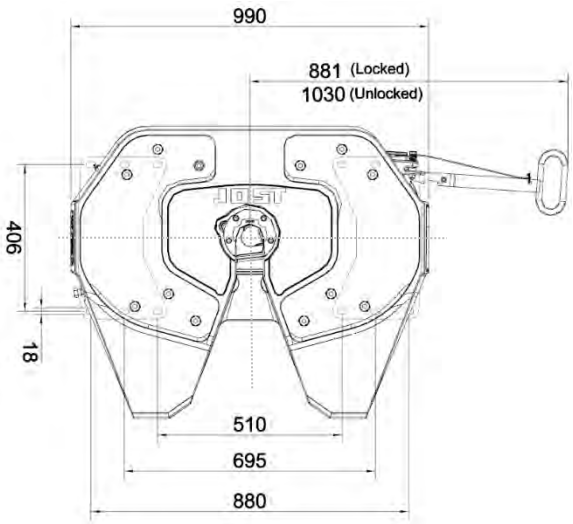

Applications: **Stock crate**
Fridge van
Tanker
B-double
Road train

Sturdier fifth wheel coupling plate, with central relief to avoid load concentration on the coupling system.
A heavy-duty fifth wheel coupling for operation in arduous conditions.
Pedestals fixed by 6 bolts. Hole areas have been reinforced.

Lock jaw and wear ring can be replaced without difficulty in a few minutes with the fifth wheel still in position.
Mounting must be carried out in accordance with our mounting instruction.

Type	Overall Height mm	Imposed Load kg	D-Value kN	Weight Approx. kg	Approval Number
JSK37CX/150	150	24000	240	162	CTA-045374
JSK37CX/170	170	24000	240	168	CTA-045374
JSK37CX/185	185	24000	240	170	CTA-045374
JSK37CX/220	220	24000	240	179	CTA-045374

Spare parts for type JSK37CXW

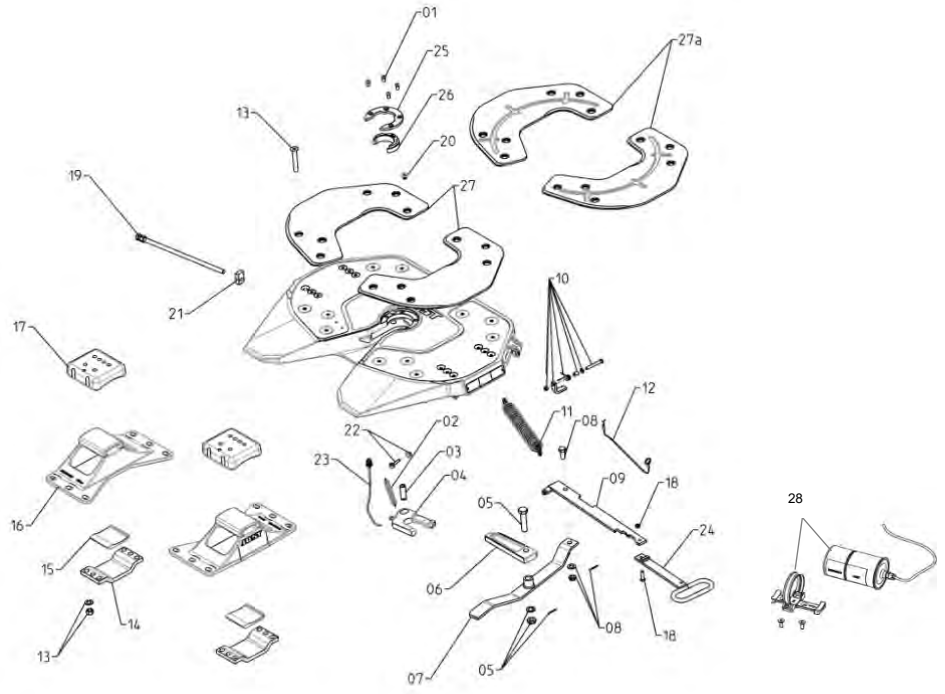

Fig.	Description	Code
01	Wearing bolts	SK312155
02	Lock jaw spring	SK847
03	Pivot	SK210667
04	Locking Jaw	SK1489Z
05	Lock bar bolt (complete)	SK322101
06	Lock bar	SK320506
07	Lever with bushing	SK310518
08	Lever Bolt	SK1513
09	Internal operating handle	SK3105115
10	Latch kit	SK312152-K1
11	Double tension spring	SK310520
12	Latch cord, complete	SK352102
13	Countersunk bolt complete	SK212115
14	Mounting Bracket	QR00215J01
15	Lower rubber cushion	SK210525
16a	Pedestal (150mm) Bolt on (P)/ weldable (W)	SKC-150-P/W

Fig.	Description	Code
16b	Pedestal(170mm) Bolt on(P) & weldable (W)	SKC-170-W
16c	Pedestal (185mm) Bolt on (P)/ weldable (W)	SKC-185-P/W
16d	Pedestal (220mm) Bolt on (P)/ weldable (W)	SKC-220-P/W
17	Upper rubber cushion	SK1259
18	Extended handle bolt	SK242150
19	Adjustment screw	AD01148B80
20	Insert Screw	SKT001006000
21	Guide with thread	SK320507
22	Pin with eyelet	SK212204
23	Greaseline lock jaw	SK310802
24	Extended Handle	SK3105113
25	Wear Ring	SK310593
26	Wear Ring Insert	SK310592
27	Insert Pad kit	SK3106007CX
27a	Insert Pad (Steel) kit	SK9000
28	Lubetronic grease cartridge (Optional)	SKE003110310

Repair Kits

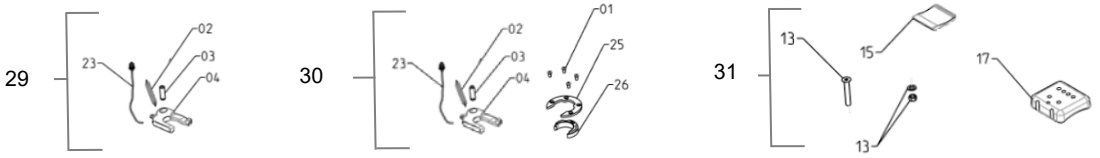

Fig.	Repair Kits	Part No.
29	Repair kit - locking Mechanism JSK37 - items 2, 3, 4, 23	SK322152Z
30	Repair Kit - locking Mechanism Heavy duty - items 1, 2, 3, 4, 23, 25, 26	SK322150CXW
31	Repair Kit – Pedestal Bush Heavy Duty - items 13, 15, 17 (with 12 bolts, nuts & washers)	SK212169CX

JSK37E Pivot bearing

With Wear Ring & External Jaw Lubrication



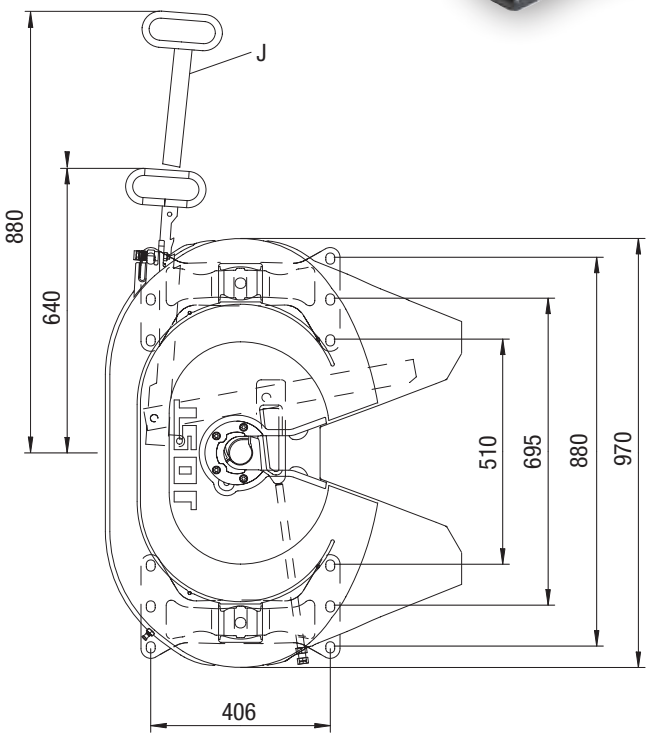

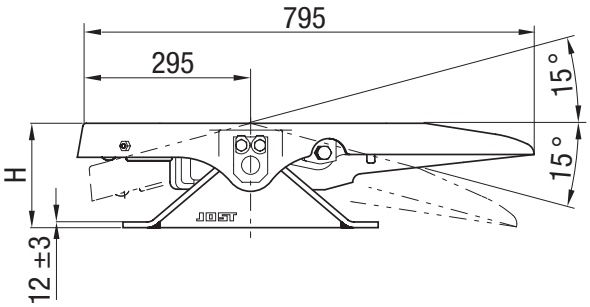

Applications: **Highway Work**
Tipper Work

Lock jaw and wear ring can be replaced without difficulty in a few minutes with the fifth wheel still in position.

Available with extended operating handle (240mm) on demand.

Mounting must be carried out in accordance with our instructions.

Mounting hole pattern in accordance with DIN standard 74081 and ISO standard 3842. Suitable for all types of rear axle steering systems.

The right to alter specifications is reserved.

Type	Overall height mm	Imposed Load kg	D-value kN	Pedestal style	Approval Number
Cast Pedestals 6 inch (155.8mm)	155.8	20000	190	Weld on	CTA-036821
Cast Pedestals 7 inch (181.2mm)	181.2	20000	190	Weld on	CTA-036821
Cast Pedestals 8 inch (206.6mm)	206.6	20000	190	Weld on	CTA-036821
Cast Pedestals 9 inch (232.0mm)	232.0	20000	190	Weld on	CTA-036821
JSK37E150MM	150.0	20000	190	Bolt on	CTA-036821
JSK37E170MM	170.0	20000	190	Bolt on	CTA-036821
JSK37E185MM	185.0	20000	190	Bolt on	CTA-036821

Spare parts for JSK37E

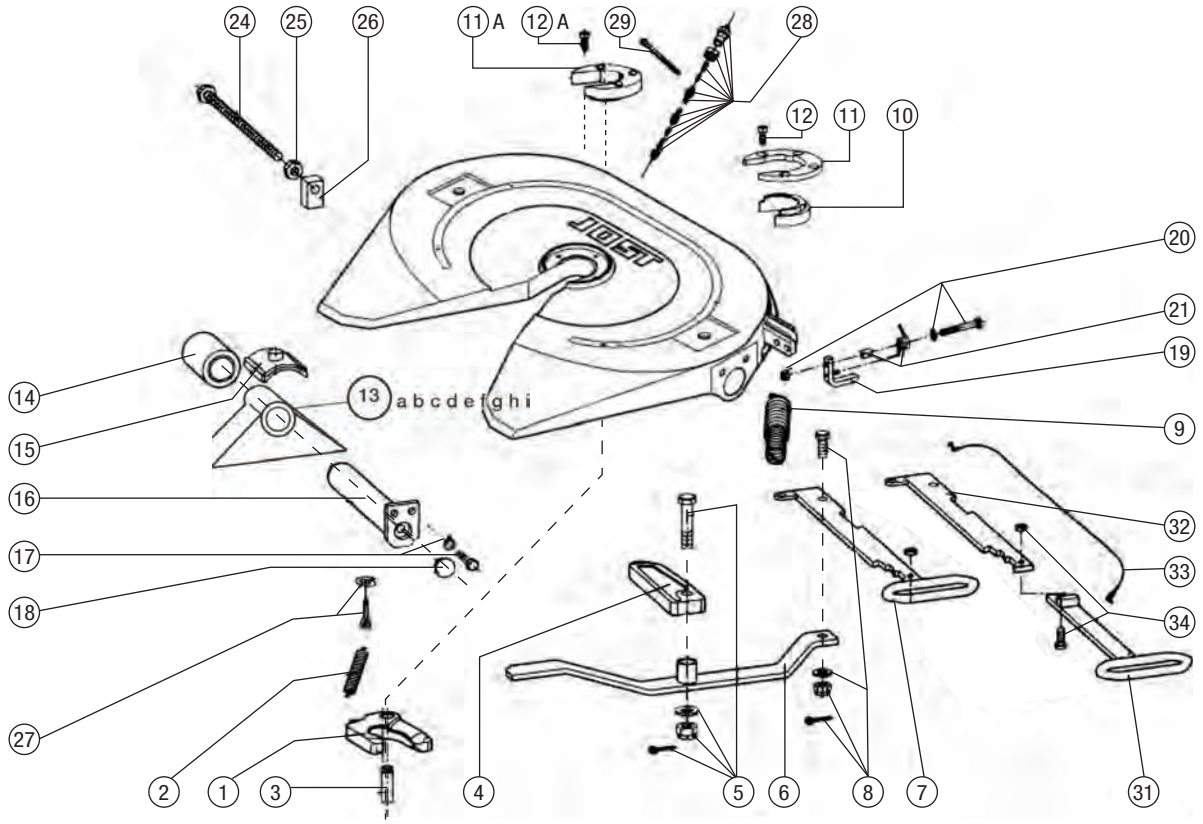

Fig.	Description	Part No.
01	Jaw	SK1489Z
02	Jaw Spring	SK847
03	Jaw Pivot	SK210667
04	Locking Bar	SK320506
05	Lock Bar Bolt	SK322101
06	Release Lever	SK310518
07	Operating Handle	SK310515
08	Head Bolt	SK1513
09	Double Tension Spring	SK310520
10	Wearing Ring Insert	SK310592
11	Wearing Ring Fixture	SK310593
11a	Wearing Ring Fixture	SK210519
12	Socket Head Bolt	SK312155
12a	Socket Head Bolt	SK212107
13a	Cast Pedestals 6 inch (155.8mm)	SKE-6IN-W
13b	Cast Pedestals 7 inch (181.2mm)	SKE-7IN-W
13c	Cast Pedestals 8 inch (206.6mm)	SKE-8IN-W
13d	Cast Pedestals 9 inch (232.0mm)	SKE-9IN-W
13e	Bolt on Pedestals 150mm	SK2904/42
13f	Bolt on Pedestals 170mm	SK2904/41E
13g	Bolt on Pedestals 185mm	SK2904/40

Fig.	Description	Part No.
14	Rubber bushing for bolt on feet	SK290595
14a	Poly Bush	SK290520
15	Collar	SK310595
16	Swivel Pin	SK310405
17	Swivel Pin Bolt	SK312128
18	Swivel Pin Plug	JS 110112
19	Spring Latch 1996 onwards	SK312152
20	Bolt for Spring Latch	SK352103
21	Spring for Latch	SK312159
24	Adjusting Screw	SK310597
25	Hex Nut	SK212178
26	Guide Piece	SK320507
27	Eye Bolt Complete	SK212204
28	Grease Line Complete	SK310802
31	Handle Extension	SK3105113
32	Internal Operating Handle	SK3105115
33	Cable Extension	SK352102
34	Extended Handle Bolt	SK242150

Repair Kits

Fig.	Repair Kits	Part No.
01, 02, 03	Repair kit for locking device	SK322152Z
14, 15, 16, 17, 18	Repair kit	SK3121061

Fig.	Repair Kits	Part No.
01, 02, 03, 08, 10, 12, 28	Repair kit for locking device	SK3121060Z
10, 11, 12	Repair kit for wearing ring	SK310594
22, 23, 24	Repair kit for spring latch	SK312152 Kit

JSK37EW Pivot Bearing - Low Maintenance



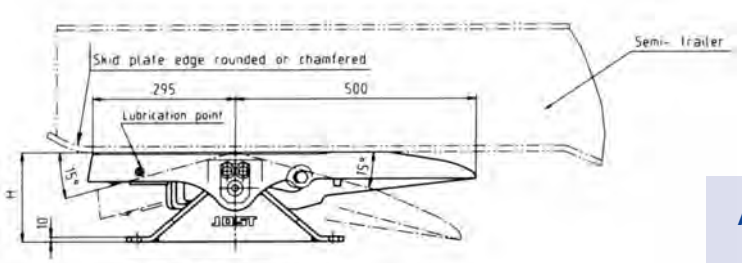

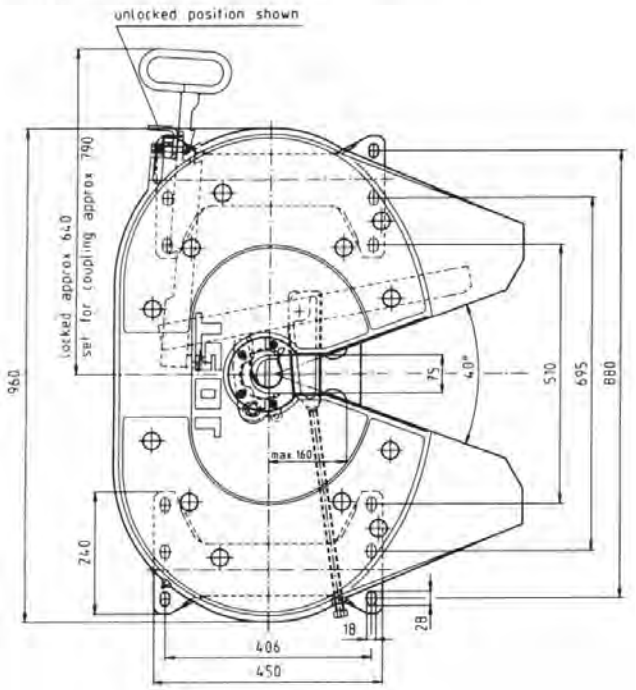

Applications: **Highway work**
Tipper Work

Low maintenance fifth wheel coupling:

- maintenance free top plate
- maintenance free rubber cushioned pivot bearings
- maintenance free wear ring
- only one remaining grease point the lock jaw (little grease required)

Lock jaw and wear ring can be replaced without difficulty in a few minutes with the fifth wheel still in position.

Available with extended operating handle (240mm) on demand.

Mounting must be carried out in accordance with our instructions.

Mounting hole pattern in accordance with DIN standard 74081 and ISO standard 3842. Suitable for all types of rear axle

The right to alter specifications is reserved.

Type	Pedestal Style	Overall height mm	Imposed Load kg	D-value Kn	Approval Number
Cast Pedestals 6 inch (155.8mm)	Weld on	141.3	20000	190	CTA-036821
Cast Pedestals 7 inch (181.2mm)	Weld on	16.7	20000	190	CTA-036821
Cast Pedestals 8 inch (206.6mm)	Weld on	192.1	20000	190	CTA-036821
Cast Pedestals 9 inch (232.0mm)	Weld on	217.5	20000	190	CTA-036821
JSK37E150MM	Bolt on	150.0	20000	190	CTA-036821
JSK37E170MM	Bolt on	170.0	20000	190	CTA-036821
JSK37E185MM	Bolt on	185.0	20000	190	CTA-036821

Spare parts for JSK37EW

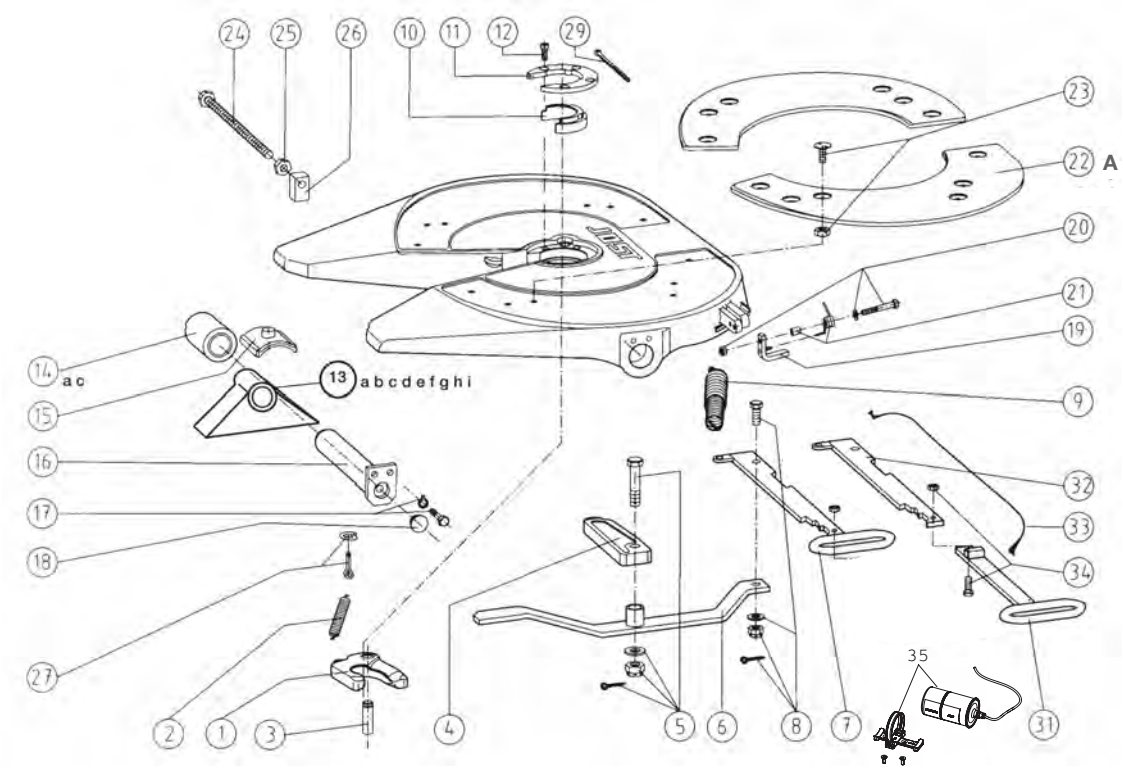

Fig.	Description	Part No.
01	Lock jaw	SK1489Z
02	Lock jaw spring	SK847
03	Pivot for lock jaw, compl.	SK210667
04	Locking bar	SK320506
05	Locking bar bolt, compl.	SK322101
06	Lever	SK310518
07	Operating handle (standard)	SK310515
08	Head bolt	SK1513
09	Double tension spring	SK310520
10	Wearing ring insert	SK310592
11	Wearing ring fixture	SK310593
12	Socket head bolt	SK312155
13a	Cast Pedestals 6 inch (155.8mm)	SKE-6IN-W
13b	Cast Pedestals 7 inch (181.2mm)	SKE-7IN-W
13c	Cast Pedestals 8 inch (206.6mm)	SKE-8IN-W
13d	Cast Pedestals 9 inch (232.0mm)	SKE-9IN-W
13e	Bolt on Pedestals 150mm	SK2904/42
13f	Bolt on Pedestals 170mm	SK2904/41E
13g	Bolt on Pedestals 185mm	SK2904/40

Fig.	Description	Part No.
14a	Rubber bushing for bolt on feet	SK290520E
15	Collar	SK310595
16	Swivel pin	SK310405
17	Socket head bolt, compl.	SK312128
18	Plug	JS110112
19	Latch	SK312152
20	Bolt for spring latch	SK352103
21	Spring noose with spacer	SK312159
22	Top plate liner, right hand	SK3105/130L
22	Top plate liner, left hand	SK3105/130R
23	Hexalobular bolt (new style)	SKT 001006000
24	Adjusting screw	SK310597
25	Hexagon nut	SK212178
26	Guide piece	SK320507
27	Eye bolt, compl.	SK212204
28	Lubrication tubing, compl.	SK310802
29	Tubing clamp	SK312113
31	Extended handle, grip	SK3105113
32	Extended handle, lower part	SK3105115
33	Latch cord, compl.	SK352102
34	Socket head bolt, compl.	SK242150
35	Lubetronic grease cartridge	SKE003110310

Repair Kits

Fig.	Repair Kits	Part No.
1, 2, 3	Repair kit for locking device	SK322152Z
10, 11, 12	Repair kit for wearing ring	SK310494
19, 20, 21	Repair kit for spring latch	SK312152 Kit

Fig.	Repair Kits	Part No.
22a	Steel Inserts 6 bolt LH	SK4001L
22	Steel Inserts (6 bolt) kit	SK4000
33,34	Handle extension, compl.	SK3121063

JSK37CZW
Rubber Mounting - Low Maintenance



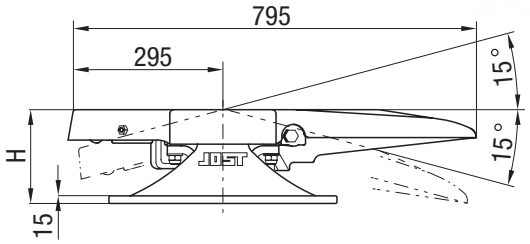

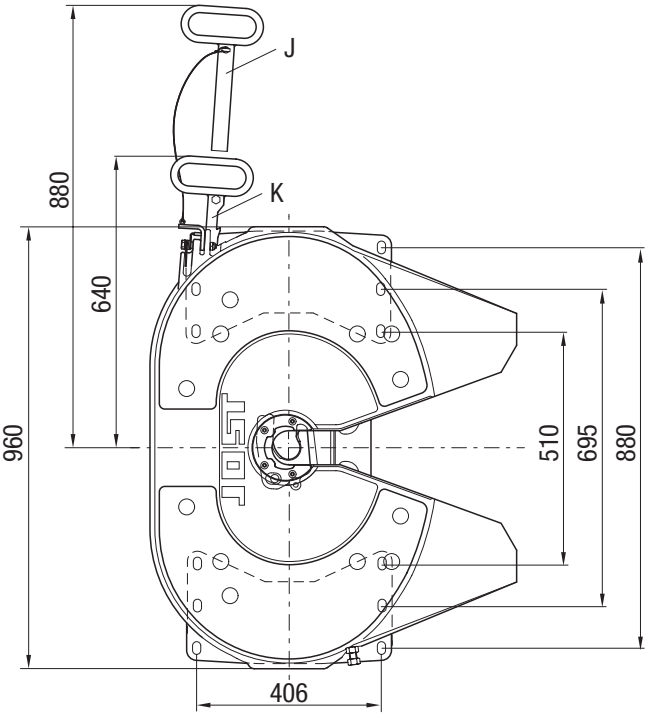

Applications: **Tanker**
General freight
Stock crate
Fridge van
B-double
Road train

Low maintenance fifth wheel coupling:

- maintenance free top plate
- maintenance free rubber cushioned pivot bearings
- maintenance free wearing ring
- only one remaining grease point the lock jaw (little grease required)

Lock jaw and wearing ring can be replaced without difficulty in a few minutes with the fifth wheel still in position.

Available with extended operating handle (240mm) on demand.

Mounting must be carried out in accordance with our instructions.

Mounting hole pattern in accordance with DIN standard 74081 and ISO standard 3842.

Type	Overall height mm	Imposed Load kg	D-value Kn	Weight approx kg.	Approval Number
JSK37C150W	150	20000	190	136	CTA-041876
JSK37C170W	170	20000	190	139	
JSK37C185W	185	20000	190	141	
JSK37C220W	220	20000	190	143	
JSK37C250W	250	20000	190	145	
*JSK37C300W	300	20000	190	161	

* Note 300mm non weldable pedestals

The right to alter specifications is reserved.

Spare parts for JSK37CZW

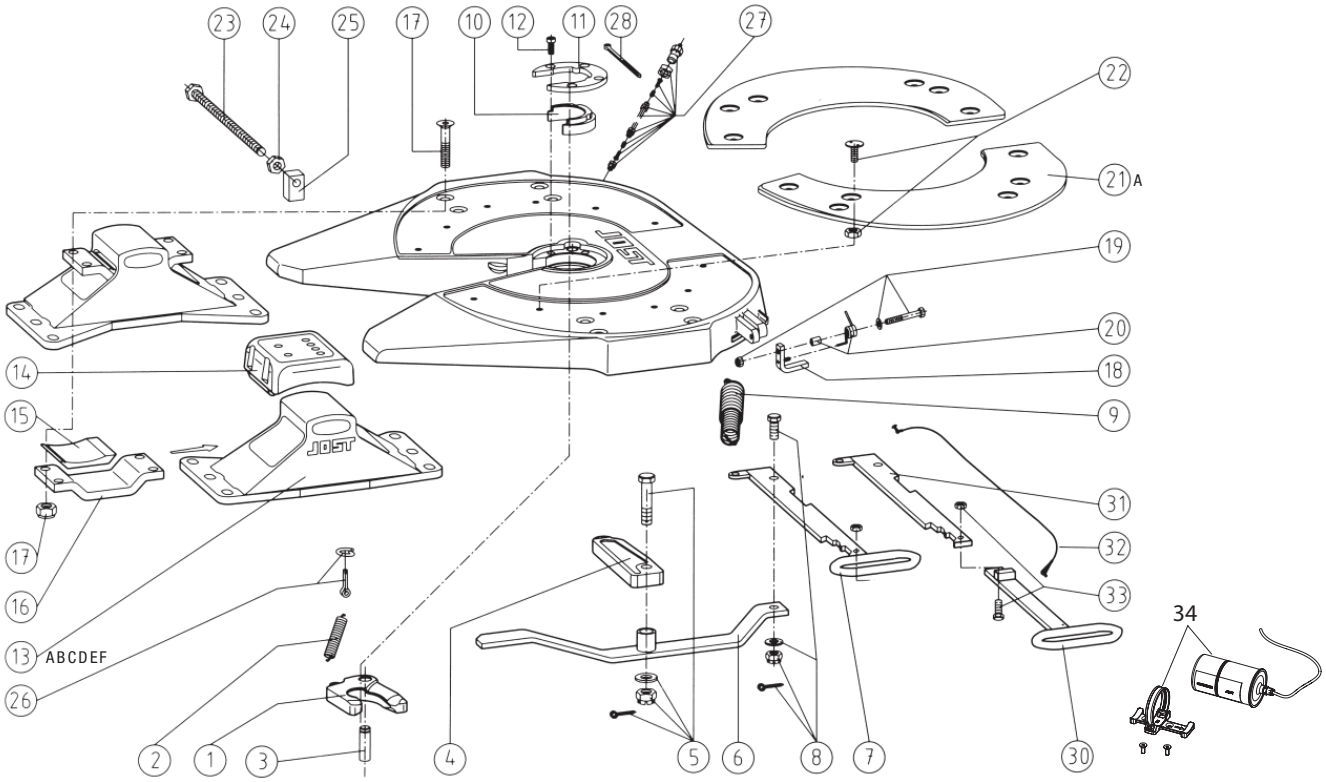

Fig.	Description	Part No.
01	Lock jaw	SK1489Z
02	Lock jaw spring	SK847
03	Pivot for lock jaw, compl.	SK210667
04	Locking bar	SK320506
05	Locking bar bolt, compl.	SK322101
06	Lever	SK310518
07	Operating handle (standard)	SK310515
08	Head bolt	SK1513
09	Double tension spring	SK310520
10	Wear ring insert	SK310592
11	Wear ring	SK310593
12	Socket head bolt	SK312155
13a	Pedestal (150mm) bolt on\weldable	SK210402X
13b	Pedestal (170mm) bolt on\weldable	SK210421X
13c	Pedestal (185mm) bolt on\weldable	SK210401X
13d	Pedestal (220mm) bolt on\weldable	SK210418X
13e	Pedestal (250mm) bolt on\weldable	SK210414X
13f	Pedestal (300mm) bolt on	SK210420
14	Upper rubber cushion	SK1259
15	Lower rubber cushion	SK210525

Fig.	Description	Part No.
16	Mounting bracket	SK1372
17	Countersunk bolt, compl.	SK212115
18	Latch	SK312152
19	Bolt for spring latch	SK352103
20	Spring noose with spacer	SK312159
21	Top plate liner, right hand (new style)	SK3105/130L
21	Top plate liner, left hand (new style)	SK3105/130R
22	Hexalobular bolt (new style bolt only)	SKT 001006000
23	Adjusting screw	SK310597
24	Hexagon nut	SK212178
25	Guide piece	SK320507
26	Eye bolt, compl.	SK212204
27	Lubrication tubing, compl.	SK310802
28	Tubing clamp	SK312113
30	Extended handle, grip	SK3105113
31	Extended handle, lower part	SK3105115
32	Latch cord, compl.	SK352102
33	Socket head bolt, compl.	SK242150
34	Lubetronic grease cartridge	SKE003110310

Repair Kits

Fig.	Repair Kits	Part No.
01, 02, 03	Repair kit for locking device	SK322152Z
10, 11, 12	Repair kit for wearing ring	SK310594
14, 15, 17	Repair kit for bearing	SK212169Z
18, 19, 20	Repair kit for spring latch	SK312152
19, 20, 21	Repair kit for spring latch	Kit SK312159
21, 22	Repair kit for top plate liner (6 bolt)	SK3106007

Fig.	Repair Kits	Part No.
21, 22a	Steel Inserts Kit 8mm (6 bolt)	SK4000
22	Steel Inserts 6 bolt LH	SK4001L
22	Steel Inserts 6 bolt RH	SK4001R
30, 32, 33	Handle extension, compl.	SK3121063
18, 19, 20	Repair kit for spring latch	SK312152 Kit

The right to alter specifications is reserved

JSK42

Technical Specification

The fifth wheel coupling complies with the following directives/ standards: 94/20/ EC - Class G50, DIN 74081, ISO 3842. Suitable for mounting 2” king pins (50) as per 94/20/EC, DIN 74085, ISO 337 and steering wedges as per 94/20/EC, DIN 74085, AS/NZS 4968-1:2003.



Technical Data

D value (kN)	Imposed load U (t)	Approval Number
200	20	CTA-036130

Selection Table

Order No.	H (mm)	Standard or Greaseless
JSK42WJ150	150	G
JSK42WJ185	185	G
JSK42WJ225	225	G
JSK42WJ250	250	G
JSK42ZJ150	150	S
JSK42ZJ185	185	S
JSK42ZJ225	225	S
JSK42ZJ250	250	S

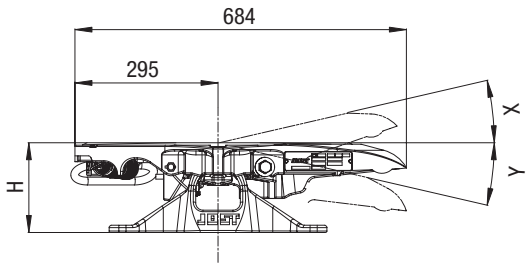

Plate mounting

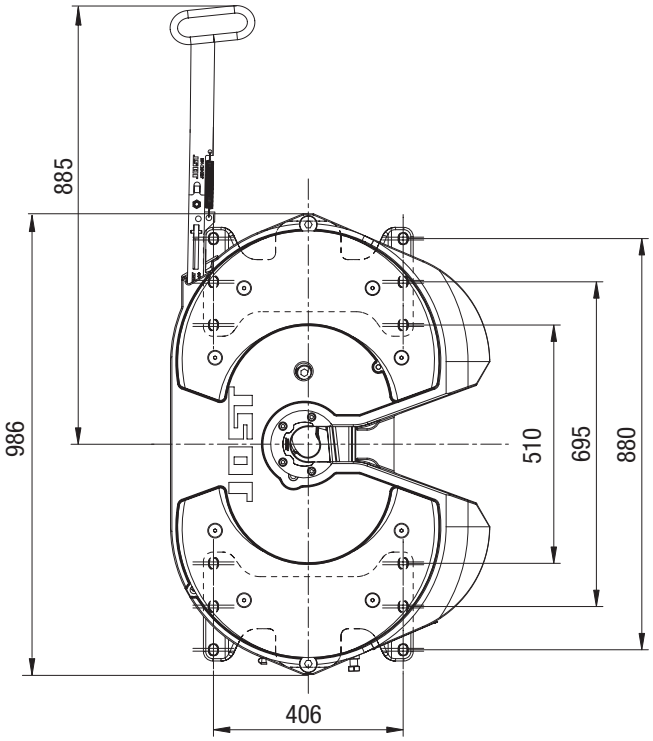

Spare parts for JSK42

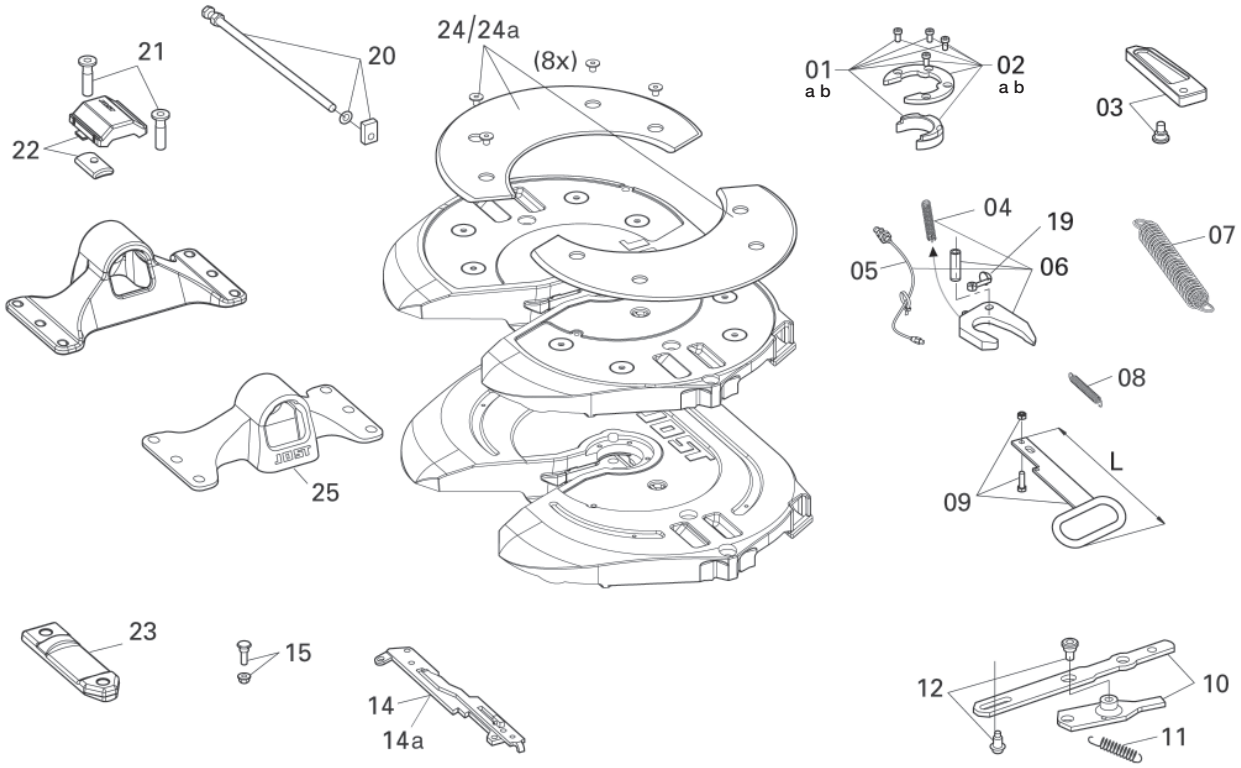

Item	Designation	Order No.	Quantity per JSK
01a	Wearing part with mounting bolt kit	SKE001740020	1
01b	Wear ring insert	SK310592	1
02a	Mounting ring kit	SK310594	1
02b	Wear ring	SK310593	1
03	Locking bar with mounting bolt	SKE001009720	1
04	Tension spring	SK847	1
05	Lubrication tube, compl. with cable tie	SK310802	1
06	Lock jaw	SK322152 Z	1
07	Double tension spring	SK310520	1
08	Locking spring	SKE001440000	1
09	Short handle, c/w 08	SKE001390020	1
09	Long handle, c/w 08	SKE001390120	1
10	Lever kit	SKE001380020	1
11	Lever spring	SKE001009800	1

Item	Designation	Order No.	Quantity per JSK
12	Lever bolts	SKE001750020	1
14	Lever, compl.	SKE001620020	1
14a	Sensor locking bar lever kit	SKE001360300	1
15	Lever bolt	SKE001650020	1
19	Eye bolt, compl.	SK212204	1
20	Adjusting screw with guide	SKE500740220	1
21	Bolt	SKE001011400	4
22	Collar, compl.	SKE001370020	2
23	Bridge	SKE001530220	2
24	Skid plate with bolts, compl.	SKE100702010	1
24a	Steel inserts	SKE6000	1
25	Pedestal H 150	SKE001005620	2
25	Pedestal H 185	SKE001005720	2
25	Pedestal H 225	SKE001005820	2
25	Pedestal H 250	SKE001005920	2

Repair and retrofit kits

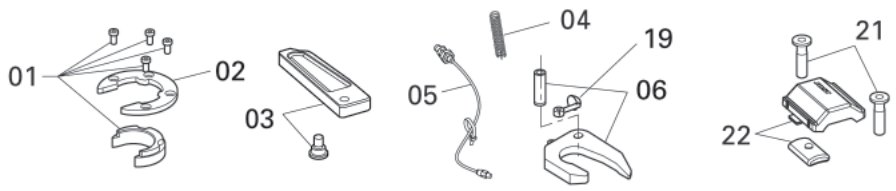

Item	Designation	Order No.
01, 02, 03, 04, 05, 06, 19	Lock compl.	SKE001640020
21, 22	Collar compl.	SKE001370020
24a	Steel Inserts	SKE6000

JSK37 Sensor Coupling



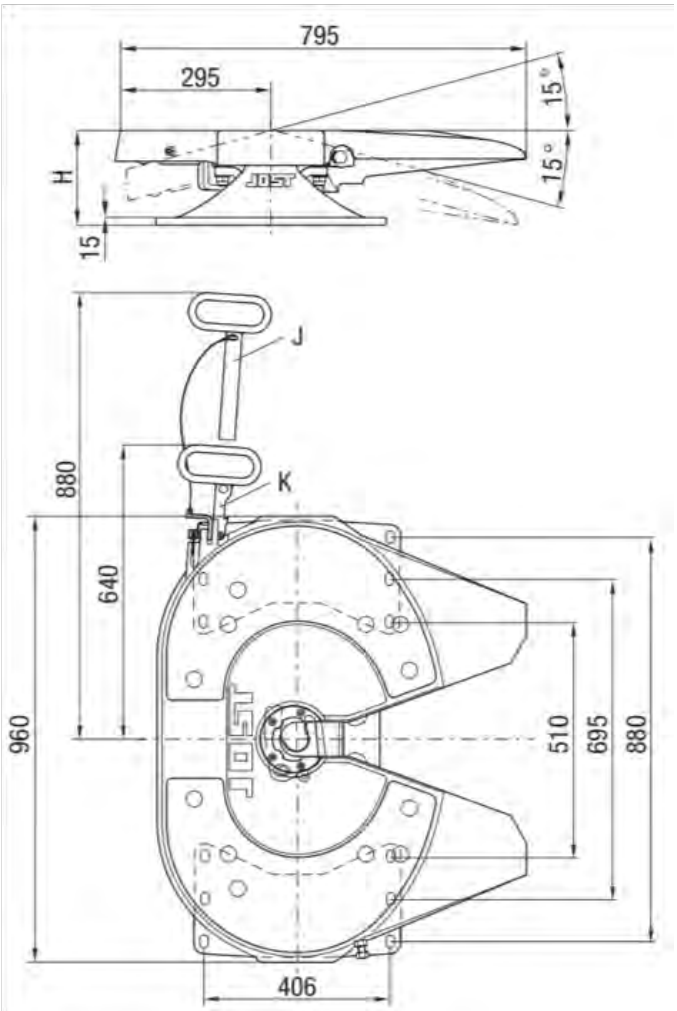

Features

- Safety solution with remote dash display
- Road-Train rated – 190kN
- JSK37C 3 point sensor with dash display
- Connections sensor, king pin sensor and coupling height sensor.
- Integrated dash display available (truck specific)
- Extended handle for easy operation
- Optional lubetronic technology.
- Greaseable and greaseless options available





Sensor Coupling

A = sensor for connection status
B = sensor for king pin
C = sensor for coupling height



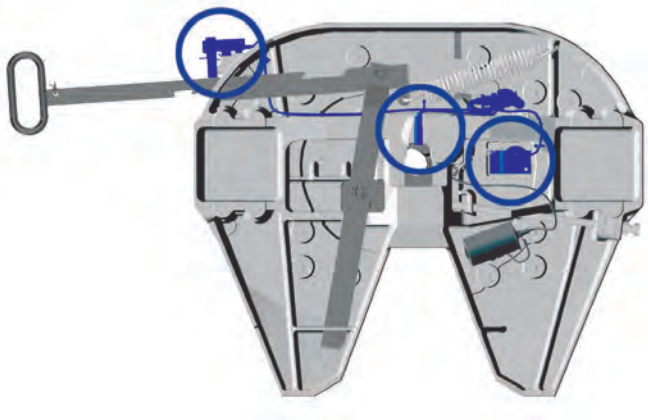

Cast coupling JSK37

Advantages at a glance

- Sensors provide best possible safety during the coupling process
- Increased safety even in poor visibility
- A remote display processes the signal and displays it in the driver's cab

Technical Features

- A sensor permanently monitors the connection status
- A second sensor controls the position of the king pin
- An additional third sensor monitors the contact locking position and displays it in the driver's cab.
- The sensors are located in protected zones on non-moving parts
- Electromagnetical compatibility according to highest standards
- Also suitable for use in the transport of dangerous goods (ADR)

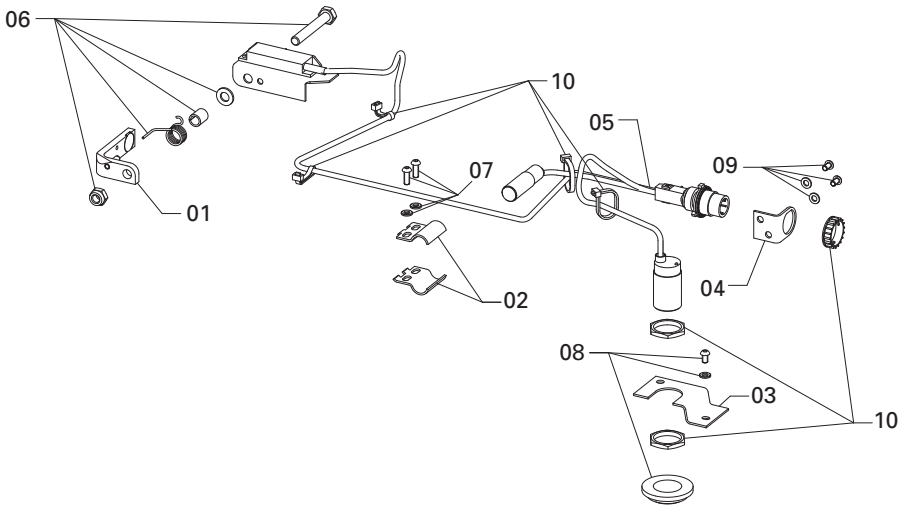

Fig.	Description	Remark	Part No.	Quantity
01	Latch plate with locking magnet	with 06	SKE2905104	1
02	Latch plate with locking magnet	with 07	SK2905130	1
03	Retaining plate for trailer sensor	with 08	SKE003220100	1
04	Retaining plate for trailer sensor	with 09	SKE 004650000	1
05	3-sensor cable harness with retaining plate for locking sensor - JSK37	with 06, 07, 08, 09, 10	SKE002040500	1
	Sensor display with 3 sensors - 24V	oZ	SKE501620200	1
	Sensor display with 3 sensors - 12V	oZ	SKE501620500	1
	Extension cable, standard quality	oZ	SKE002110100	1
	Extension cable, ADR quality	oZ	SKE002110200	1

Refer to JSK37CZ and JSK37CZW for parts breakdown.

JSK37027 Roll Back Application



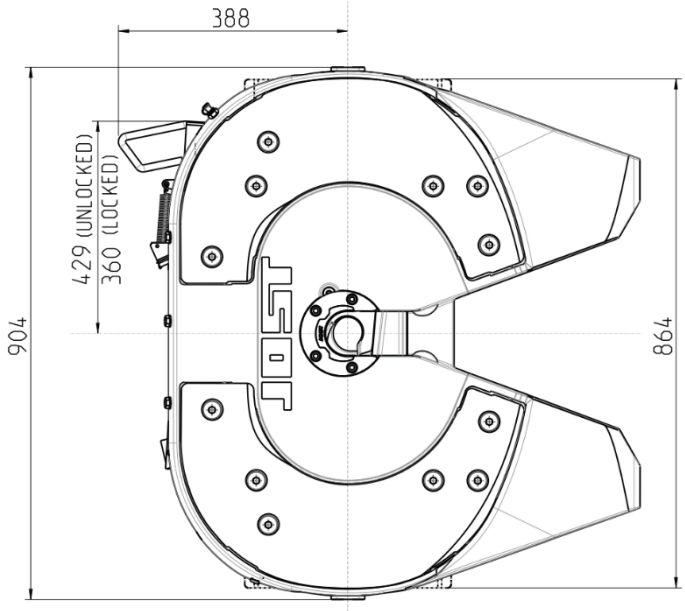

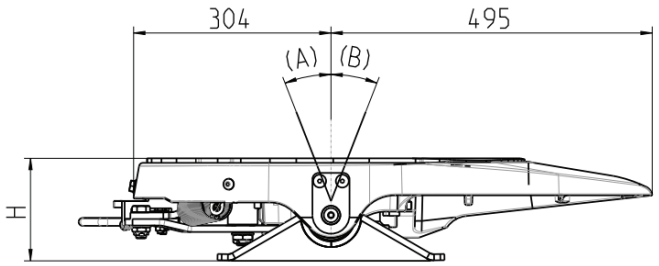

Applications: **Fridge van**
Roll back application
Tipper Work

Low maintenance fifth wheel coupling:

- maintenance free top plate
- maintenance free rubber cushioned pivot bearings
- maintenance free wear ring
- only one remaining grease point the lock jaw (little grease required)

Lock jaw and wear ring can be replaced without difficulty in a few minutes with the fifth wheel still in position.

Mounting must be carried out in accordance with our instructions.

Type	Overall height (H) mm	Imposed Load on tractor kg	D-value kN	Weight approx. kg	Approval Number
JSK370-xxxx-W6	156	20000	190	123	CTA-038553
JSK370-xxxx-W7	181	20000	190	128	CTA-038553
JSK370-xxxx-W8	206	20000	190	128	CTA-038553
JSK370-xxxx W9	232	20000	190	130	CTA-038553

Spare parts for JSK37027 - Manual Release

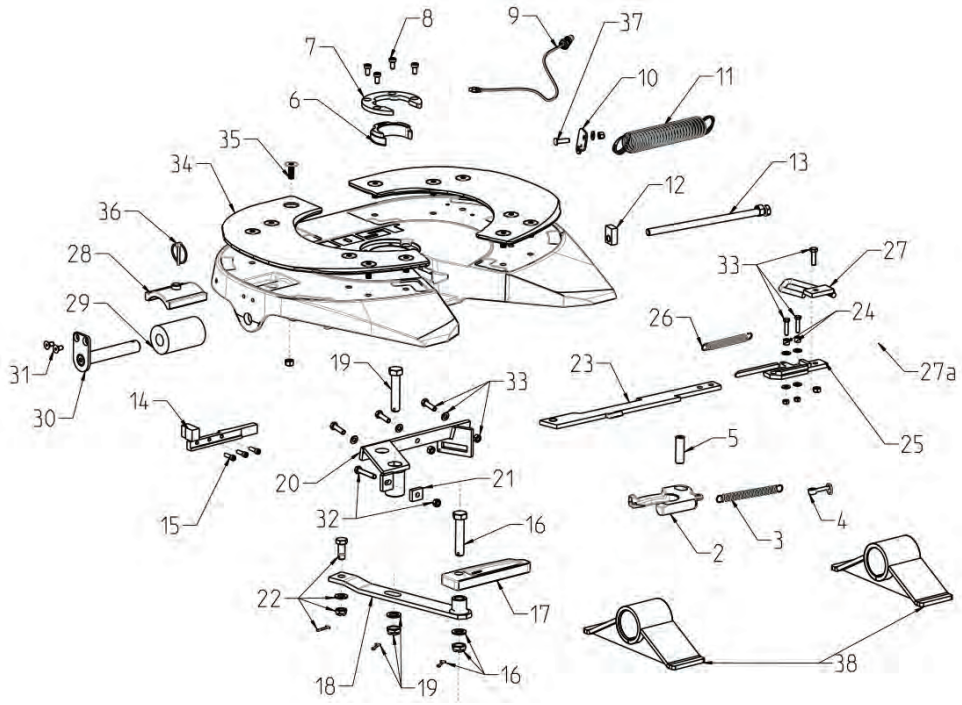

Fig.	Description	Part No.
02	Lock jaw	SK1489LZ
03	Lock jaw spring	SK847
04	Eye bolt with ring	SK212204
05	Lock jaw pivot	SK7210667
06	Wear ring insert	SK310592
07	Wear ring	SK7310593
08	Wear ring bolts	SK7312155
09	Greaseline	SK310802
10	Handle guide and spring retainer	SK7901632
11	Double tension spring	SK210511
12	Adjuster bolt guide piece	SK7320507
13	Adjuster bolt	SK7901005
14	Lock bar retaining guide	SK7901622
15	Bolt UNC 5/16 X 3/4	JSB-UNC.312X1CS
16	Lock bar bolt	SK322101
17	Lock bar, JSK37	SK320506
18	Rollback lever	SK7020230
19	Lock bar bolt	SK322101
20	Rollback handle guide watch	SK7020210
21	Square washer	SK7020220

Fig.	Description	Part No.
22	Lever Bolt	SK1513
23	Rollback Internal Handle	SK7020240
24	Rollback guide bushing	SK7020260
25	Rollback Handle mechanism	SK7020250100
26	Handle spring	SK847
27	Rollback standard handle	SK702025A200
27a	Rollback extended handle	SK702025B200
28	Pedestal collar	SK7310595-1
29	Pedestal bush	SK7290521
30	Pedestal pin	SK7310405-1
31	Bolt UNC3/8X3/4 Flathead CSK	JSB.UNC.375x.75FH
32	Hex bolt, M10 x 60mm	JSB-M10X60HEX-ZP
33	Hex bolt, M10 x 35mm	JSB-M10X35HEX-ZP
34a	Repair kit - Teflon insert kit	SK3106027
34b	Repair kit - Steel insert kit	SK5000
35	Insert bolt	SK3121027
36	Lynch pin	NI-6X40MM LP
37	JSB-UNC.375X1.25BH	JSB-UNC3/8X1-1/4BH
38	SKE-6IN-W	6 Inch, Weldable Peds
38a	SKE-7IN-W	7 Inch, Weldable Peds
38b	SKE-8IN-W	
38c	SKE-9IN-W	9 Inch, Weldable Peds

Repair Kits

Fig.	Repair Kits	Part No.
24, 25, 26, 27, 33	Repair kit – Mechanism with standard handle	SK7020204
27, 33	Repair kit - standard handle	SK7020205
27a, 33	Repair kit - extended handle	SK7020206
2, 3, 4, 5, 6, 7, 8,9	Repair kit - Locking mechanism	SK7322150Z
28, 29, 30, 31, 36	Repair kit - Pedestal collar, bolt, lynch pin	SK7501402/-1/-2/-3/-4

Spare parts for JSK37027 - Pneumatic Air Release

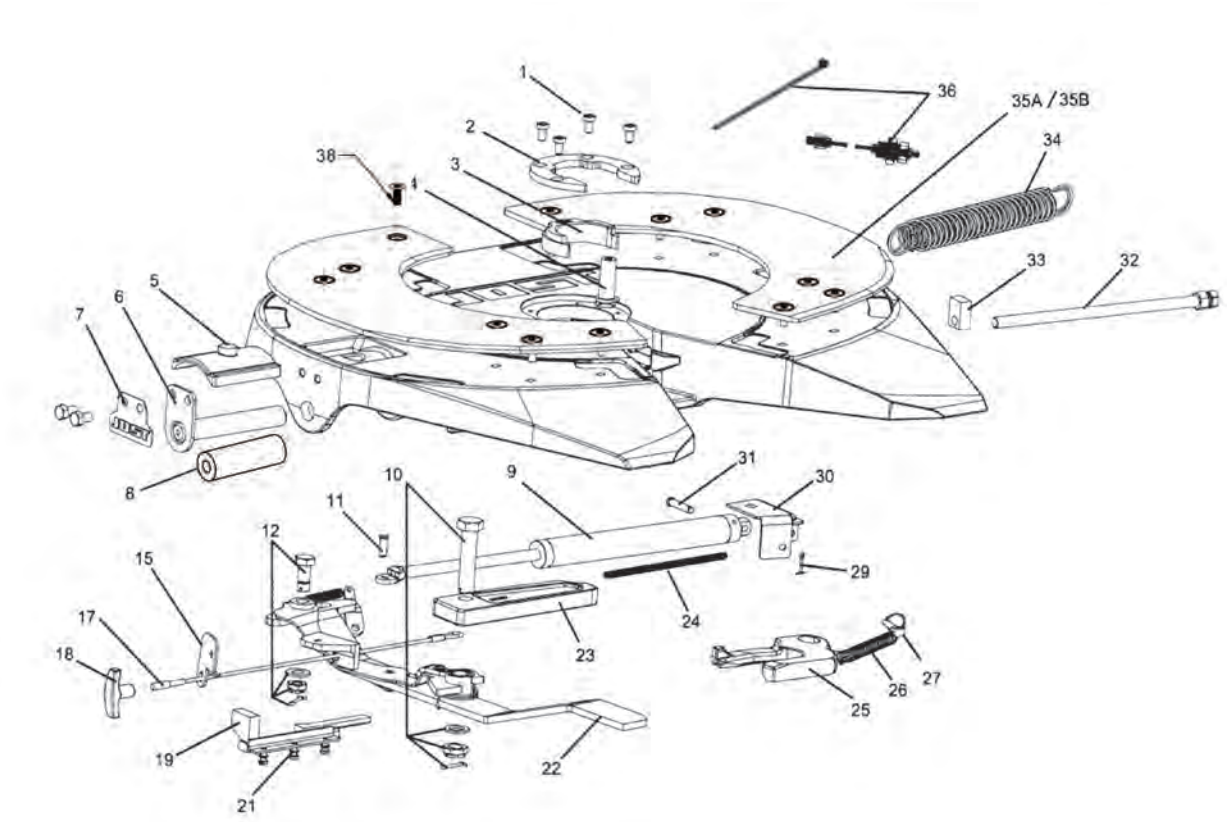

Fig.	Description	Part No.
01	Wear ring bolt	SK7312155
02	Wear ring	SK310593
03	Wear ring insert	SK310592
04	Pivot pin for lock jaw	SK7210667
05	Composite Pedestal Collar	SK7310595-1
06	Pedestal Swivel Pin	SK7310405-2
07	Lock Tab	SK3104046-1
08	Bush	SK290521
09	Air cylinder	SK7902013
10	Locking bar bolt assembly	SK7322101
11	Air cylinder slip pin ⅜" dia. × ¾" lg	SK7010501
12	Pivot bolt assembly	SK71513
15	Handle guide	SK7901632
17	Pull cable assembly	SK7901646
18	T handle air release	SK7101200
19	Lock/unlock plate weldment	SK7901622

Fig.	Description	Part No.
21	¼" split lock washer	SK7030305
22	Release arm assembly	SK7901637
23	Locking bar	SK320506
24	Cable spring	SK7100504
25	Lock jaw	SK1489LZ
26	Lock jaw spring	SK847
27	Eyebolt with ring	SK212204
29	⅛" dia × 1" lg cotter pin	SK7010103
30	Cylinder mount bracket	SK7902008
31	⅜" dia × 1⅜" clevis pin	SK7010201
32	Adjustment screw with hex nut	SK7901005
33	Guide piece	SK7320507
34	Double tension spring	SK310520
35A	Teflon insert kit	SK3106027
35B	Steel insert kit	SK5000
36	Lubricating kit	SK310802
38	Insert bolt	SK3121027

Repair Kits

Fig.	Repair Kits	Part No.
0136	Repair kit for complete topplate	SK7501315
0104, 2528, 36, 37	Repair kit for cushion and lock jaw	SK7322150Z
5, 6, 7, 8 & Bolts	Repair kit includes both sides	SK7501402-1
35A	Teflon insert kit	SK3106027
35B	Steel insert kit	SK5000
25, 26, 27	Repair kit for lock jaw	SK7295301

LP37E Cast Top
Stabilised Fifth Wheel Assembly 2"



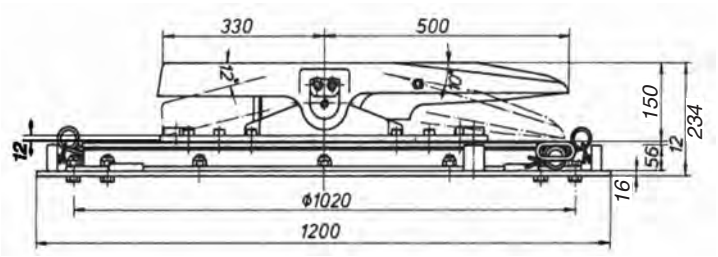

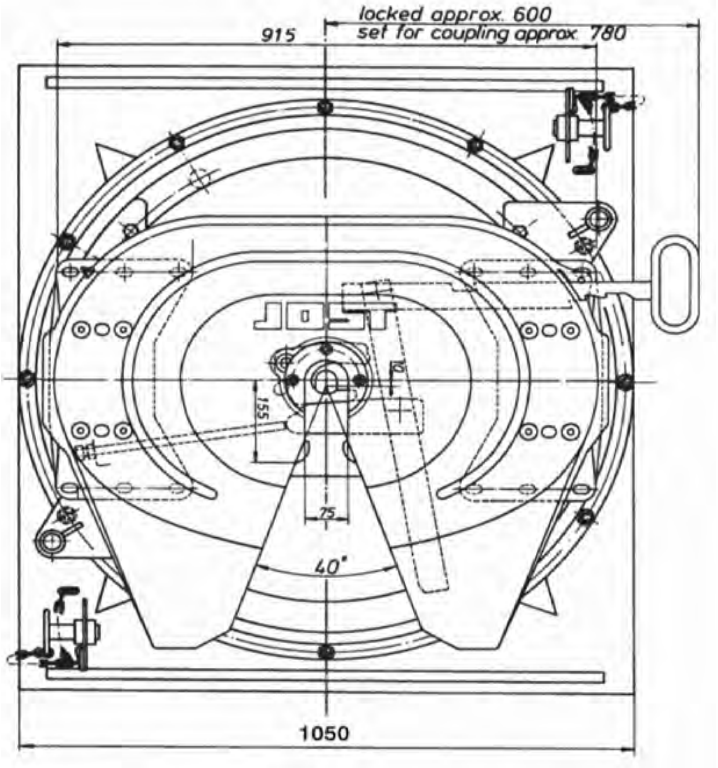

Application: **Highway work**
Tipper work

also available with:

16mm Base Plate	LP37E 16 mm
20mm Base Plate	LP37E 20 mm

*Note thicker base plate determines extra weight
**Note other heights available on request

D-Value	190 kN
Overall height	234 mm
Imposed load	20000 kgs
Weight approx. (for 16mm base plate)	356 kgs
Approval Number	JSK37E - CTA-036821 LP Subassembly - CTA-047151

Twin lockouts.
Flush bolt heads on mounting plate in chassis mounting zone. Wear ring easily removed from above on JSK37E fifth wheel. Mounting must be carried out in accordance with our instructions.

Spare parts for LP37E Cast Top

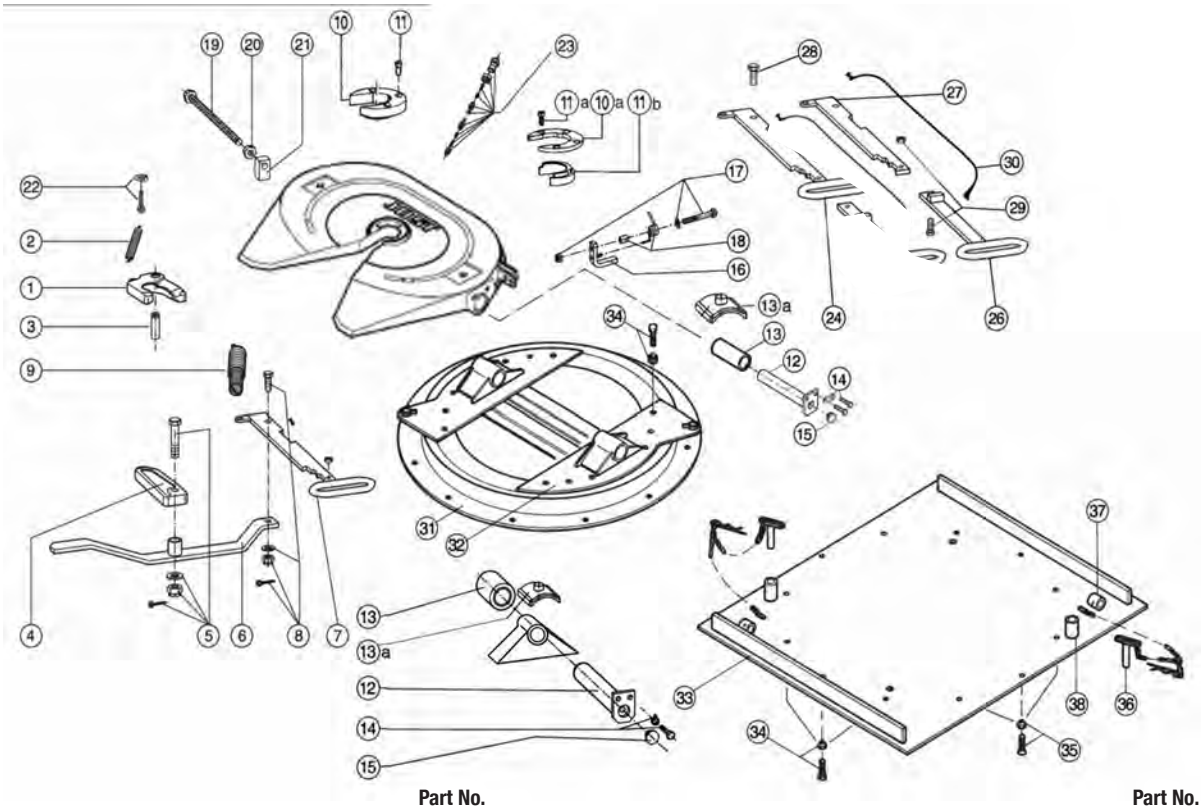

Fig.	Description	Part No. LP37 E
01	Jaw	SK1489Z
02	Jaw Spring	SK847
03	Jaw Pivot	SK210667
04	Locking Bar	SK320506
05	Lock Bar Bolt	SK322101
06	Release Lever	SK310518
07	Operating Handle	SK310515
08	Head Bolt	SK1513
09	Double Tension Spring	SK310520
10	Wear Ring Fixture	SK210519
10a	Wear Ring Fixture	SK310593
11	Wear Ring Bolt	SK212107
11b	Wear Ring Insert	SK310592
11a	Wear Ring Bolt	SK312155
12	Swivel Pin	SK310405
13	Pedestal Bush	SK290520
13a	Collar	SK3105/95
14	Swivel Pin Bolt	SK312128
15	Swivel Pin Plug	JS110112
16	Spring Latch	SK312152
17	Bolt for Spring Latch	SK352103
18	Spring for Latch	SK312159

Fig.	Description	Part No. LP37 E
19	Adjusting Screw	SK310597
20	Hex Nut	SK212178
21	Guide Piece	SK320507
22	Eye Bolt Complete	SK212204
23	Grease Line Complete	SK310802
24	Operating Handle	SK310515
26	Handle Extension	SK3105113
27	Internal Operating Handle	SK3105115
28	Head Bolt	SK1513
29	Extended Handle Bolt	SK242150
30	Cable Extension	SK352102
31	Ball bearing	KDL9006W
32	Half Moon c/w 130mm or 150mm Ped.	SK370402
33a	Base plate (12mm) incl. 56, 57, 58	SK370612
33b	Base plate (16mm) incl. 56, 57, 58	SK370616
33c	Base plate (20mm) incl. 56, 57, 58	SK370620
34	Hex. bolt compl.	SK372104
35	Countersunk bolt compl.	SK372105
36	Lock out pin compl. with chain (old style)	SK370610
36a	Lock out pin compl. with R clip (new style)	SK370609
37	Tube park	SK370604
38	Tube lock out (old style)	SK370605
38a	Tube lock out (new style)	SK370504

Repair Kits

Fig.	Repair Kits	Part No.
01, 02, 03	Repair kit for locking device	SK322152Z
12, 13, 13a, 14, 15	Repair kit for locking device	SK3121061
01, 02, 03, 08, 11, 23, 28	Repair kit for locking device	SK3121060Z
10, 11a, 11b	Repair kit for wear ring	SK310594

LP37CZ Cast Top
Low Profile Stabilised Fifth Wheel Assembly 2"



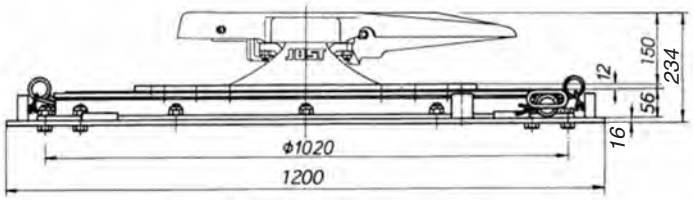

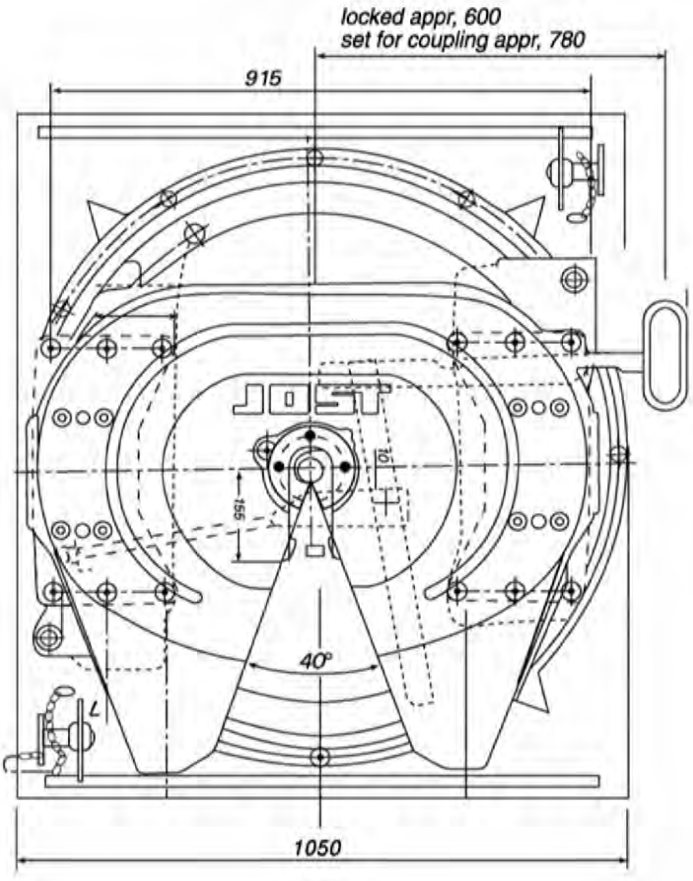

Application: **Stock crate**
Fridge van
General freight
Tankers

also available with:

16mm Base Plate	LP37CZ 16mm
20mm Base Plate	LP37CZ 20mm

Narrow chassis width available ie European spec

*Note: thicker base plate determines extra weight and height.

**Note: other heights are available on request

D-Value	190 kN
Overall height	234 mm
Imposed load	20000 kgs
Gross comb. weight	135000 kgs
Weight approx. (for 12mm base plate)	367 kgs
Approval Number	JSK37CZ - CTA-041876 LP Subassembly - CTA-047151

Twin lockouts.

Flush bolt heads on mounting plate in chassis mounting zone. Cast type unit equipped with external king pin grease point for additional lubrication to the jaw. Wear ring easily removed from above on JSK37CZ fifth wheel. Mounting must be carried out in accordance with our instructions.

Spare parts LP37CZ Cast Top

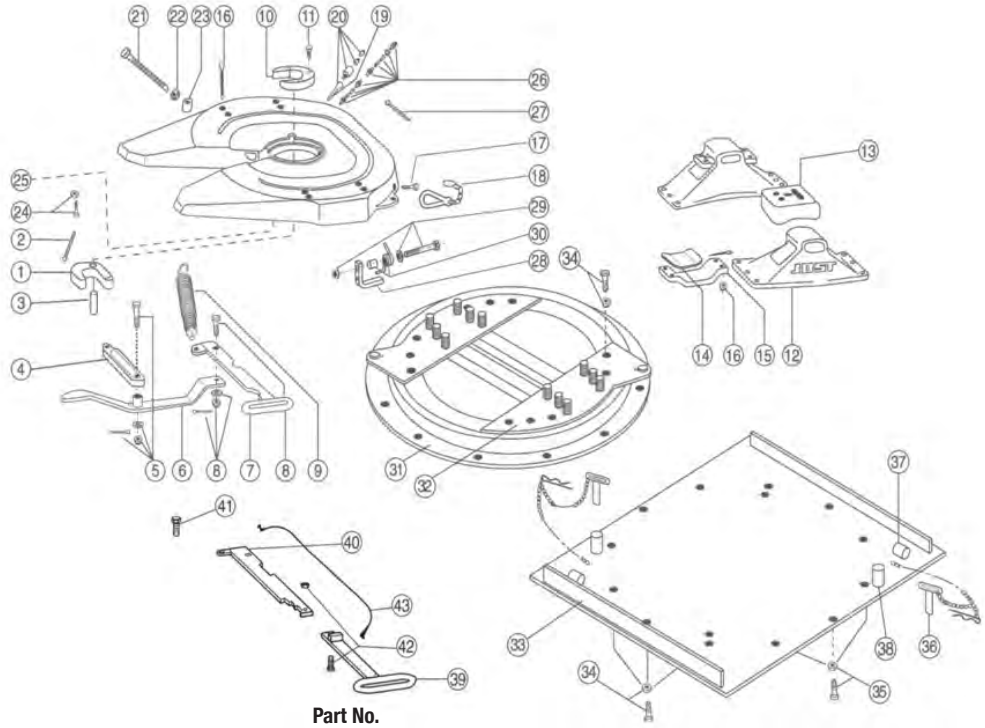

Fig.	Description	Part No. LP37 CZ
01	Lock jaw	SK1489Z
02	Lock jaw spring	SK847
03	Pivot for lock jaw, compl.	SK210667
04	Locking bar	SK320506
05	Locking bar bolt, compl.	SK322101
06	Lever	SK310518
07	Operating handle	SK310515
08	Head bolt	SK1513
09	Double tension spring	SK310520
10	Wearing ring	SK210519
11	Socket head bolt	SK212107
12	Pedestal (185mm)	SK210401X
	Pedestal (170mm)	SK210421X
	Pedestal (150mm)	SK210402X
13	Upper rubber cushion	SK1259
14	Lower rubber cushion	SK210525
15	Mounting bracket	SK1372
16	Socket head bolt, compl.	SK212115
17	Split pin	SK1974
18	Spring hook pre 1995	SK1436
18b	Wedge	SK1436V
19	Lubrication fitting	SK1989
20	Grease nipple compl	SK1976
21	Adjusting Screw	SK310505
22	Hexagon nut	SK212178

Fig.	Description	Part No. LP37 CZ
23	Guide piece	SK320507
24	Eye bolt compl.	SK212204
25	Grease nipple	SK312111
26	Lubrication tubing with Fig. 27	SK310802
27	Tubing clamp	SK312113
28	Spring Latch 1996 onwards	SK312152
29	Bolt for Spring Latch	SK3521/03
30	Spring for Latch	SK3121/59
31	Ball bearing	KDL9006W
32	Half moon compl.	SK370629
33a	Base plate (12mm) incl. 36, 37, 38	SK370612
33b	Base plate (16mm) incl. 36, 37, 38	SK370616
33c	Base plate (20mm) incl. 36, 37, 38	SK370620
34	Hex. bolt compl.	SK372104
35	Countersunk bolt compl.	SK372105
36	Lock out pin compl. with chain (old style)	SK370610
36a	Lock out pin compl. with R clip (new style)	SK370609
37	Tube park old style	SK370604
38	Tube lock out (old style)	SK370605
38a	Tube lock out (new style)	SK370504
39	Handle Extension	SK3105113
40	Internal Operating Handle	SK3105115
41	Head Bolt	SK1513
42	Extended Handle Bolt	SK242150
43	Cable Extension	SK352102

Repair Kits

Fig.	Repair Kits	Part No.
01, 02, 03, 10, 11, 26	Repair kit for locking device	SK322150Z
01, 02, 03, 26	Repair kit for locking device	SK322152Z
01, 02, 03, 08, 10, 11, 18, 26	Repair kit for locking device	SK312150Z
13, 14, 16	Repair kit for rubber bearing	SK212169Z
28, 29, 30	Kit for latch	SK312152 KIT

LP37CX Cast Top
Low Profile Stabilised Fifth Wheel Assembly 2"



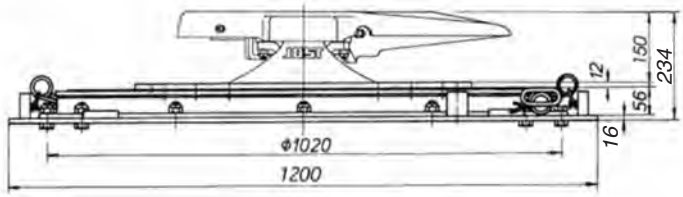

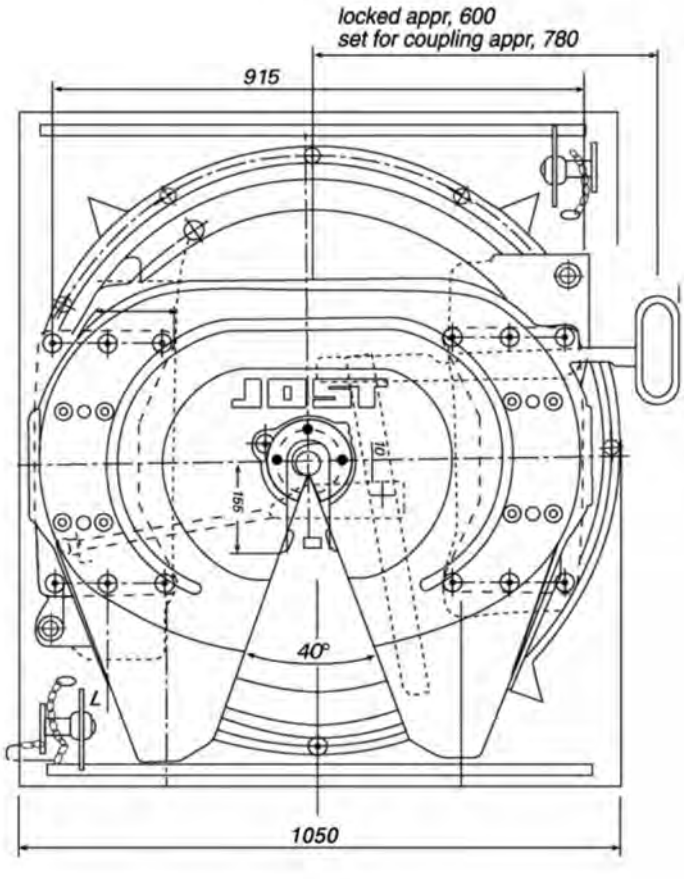

Application: **General freight**
Tankers
Fridge van
Stock crate

also available with:

16mm Base Plate	LP37CX 16mm
20mm Base Plate	LP37CX 20mm

Narrow chassis width available ie. European spec

*Note thicker base plate determines extra weight and height.

**Note: other heights are available on request

D-value	240kN
Overall height	234mm
Imposed load	24000 kgs
Weight approx. (for 12mm base plate)	367 kgs
Approval Number	JSK37CX - CTA-045374 LP Subassembly - CTA-047151

Twin lockouts.

Flush bolt heads on mounting plate in chassis mounting zone. Cast type unit equipped with external king pin grease point for additional lubrication to the jaw.

Wearing easily removed from above on JSK37CX fifth wheel.

Mounting must be carried out in accordance with our instructions.

Spare parts for LP37CX Cast Top

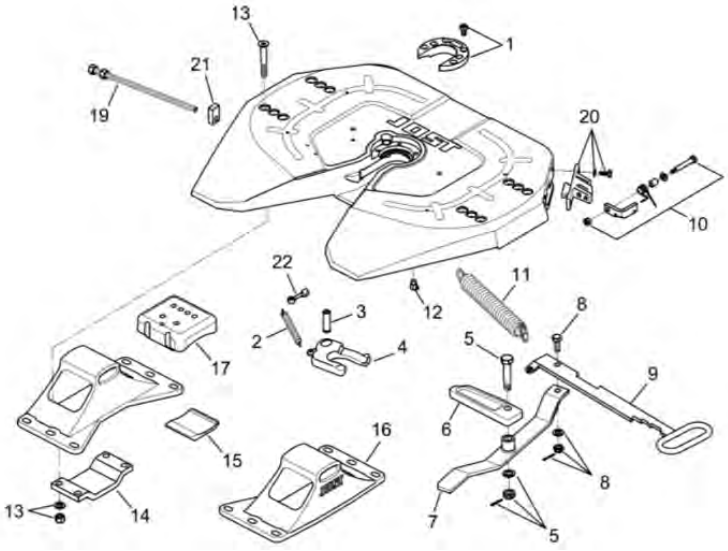

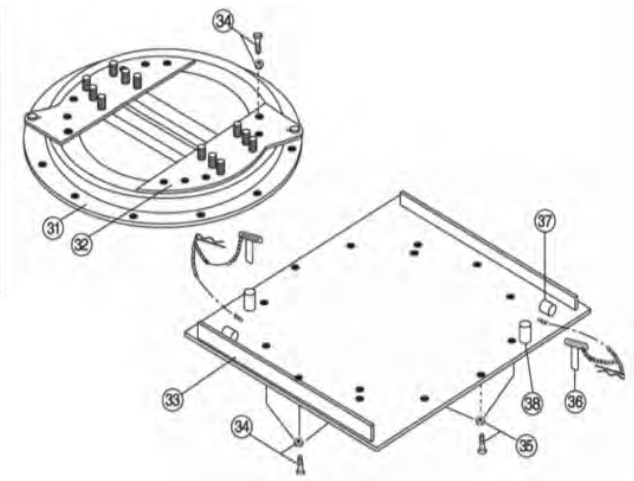

Fig.	Description	Code
01	Wearing ring and bolts	QR00269J00
02	Lock jaw spring	SK847
03	Pivot	SK210667
04	Locking jaw	SK1489Z
05	Bolt (complete)	SK322101
06	Lock bar	SK320506
07	Lever with bushing	SK310518
08	Head bolt	SK1513
09	Lever handle	SK3105/15
10	Latch kit	SK312152KIT
11	Double tension spring	SK3105/20
12	Fitting	SK312111
13	Complete countersunk bolt	SK212115
14	Mounting bracket	QR00215J01
15	Lower rubber cushion	SK21025
16	Pedestal (150mm)	SK210402X
16a	Pedestal (170mm)	SK210421X
16b	Pedestal (185mm)	SK210401X
16c	Pedestal (220mm)	SK210418X
16d	Pedestal (250mm)	SK210414X
16e	Pedestal (300mm)	SK210420

Fig.	Description	Code
17	Upper Rubber Cushion	SK1259
19	Adjustment screw	AD01148B80
20	Guide latch complete security	QR00270J00
21	Guide with thread	SK320507
22	Pin with eyelet	SK212204
31	Ball bearing	KDL9006W
32	Half mon complete	SK370629
33a	Base plate (12mm) inc 36, 37, 38	SK370612
33b	Base plate (16mm) inc 36, 37, 38	SK370616
33c	Base plate (20mm) inc 36, 37, 38	SK370620
34	Hex bolt complete	SK372104
35	Countersunk bolt complete	SK372105
36	Lock out pin compl with chain (old style)	SK370610
36a	Lock out pin compl with R clip (new style)	SK370609
37	Tube park (old style)	SK370604
38	Tube lock out (old style)	SK370605
38a	Tube lock out (new style)	SK370504

Repair Kits

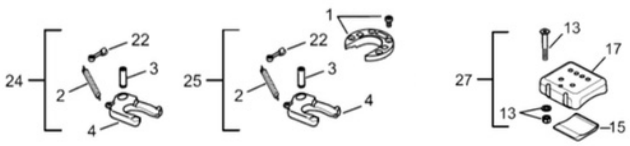

Fig.	Repair Kits	Part No.
24	Locking latch kit - items 2, 3, 4, 22	SK322152Z
25	Kit locking claw - items 1, 2, 3, 4, 22	SK322150CX
27	Base plate fastening kit - items 13, 15, 17 (with 4 screws)	SK212169CX

DR37CZ CAST TOP
Double Row Stabilised Fifth Wheel Assembly



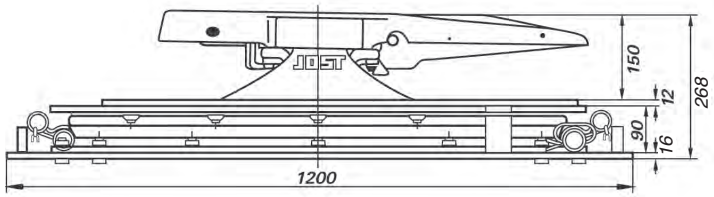

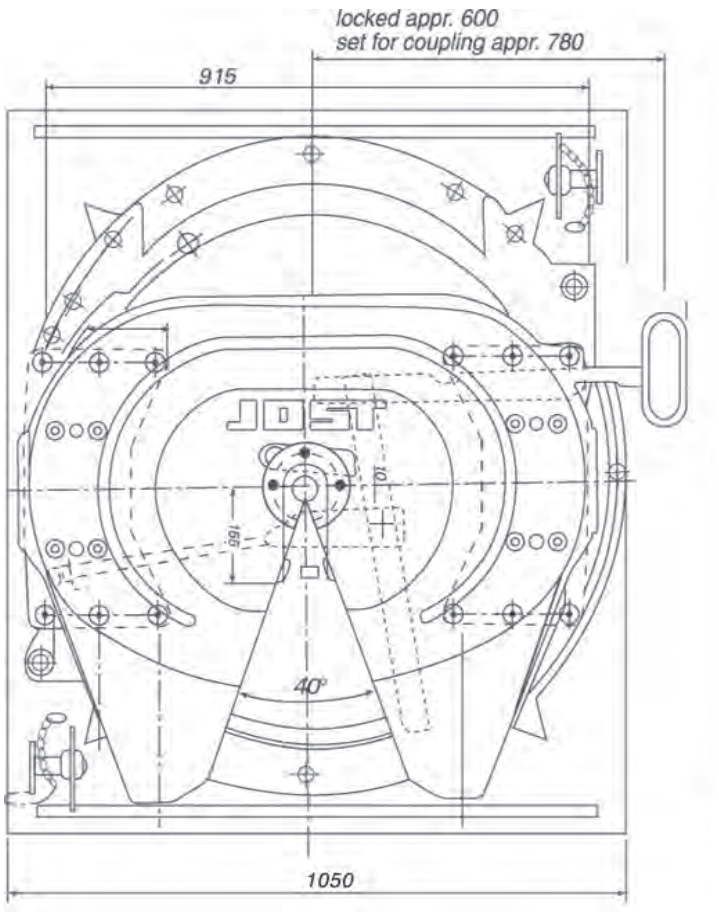

Application: **General Freight Tankers**

also available with:

16mm Base Plate	DR37CZ 16mm
20mm Base Plate	DR37CZ 20mm

*Note thicker base plate determines extra weight and height.

Overall height	268 mm
Imposed load	20000 kgs
Gross comb. weight	135000 kgs
Weight approx. (12mm Base)	405 kgs
D-Valve	190 kN
Approval Number	JSK37CZ - CTA-041876 DR Subassembly - CTA-060153

Twin lockouts.

Flush bolt heads on mounting plate in chassis mounting zone. Cast type unit equipped with external king pin grease point for additional lubrication to the jaw.

Wearing ring easily removed from above on JSK37CZ fifth wheel.

Spare parts for DR37CZ Cast Top

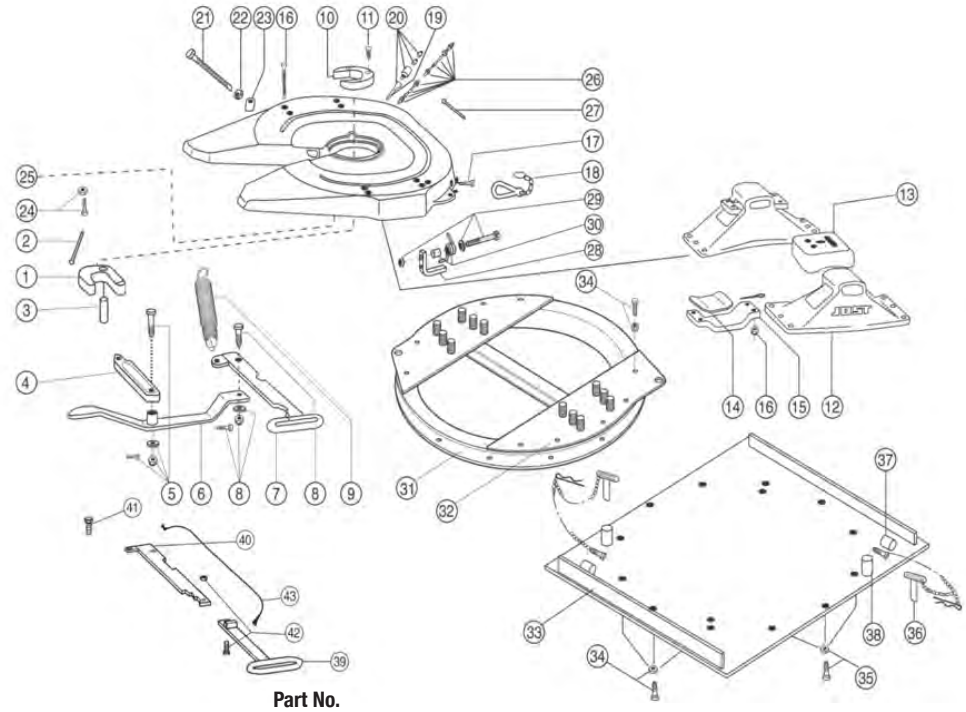

Fig.	Description	Part No. DR 37 CZ
01	Lock jaw	SK1489Z
02	Lock jaw spring	SK847
03	Pivot for lock jaw, compl.	SK210667
04	Locking bar	SK320506
05	Locking bar bolt, compl.	SK322101
06	Lever	SK310518
07	Operating handle	SK310515
08	Head bolt	SK1513
09	Double tension spring	SK310520
10	Wearing ring	SK210519
11	Socket head bolt	SK212107
12	Pedestal (185mm)	SK210401X
	Pedestal (170mm)	SK210421X
	Pedestal (150mm)	SK210402X
13	Upper rubber cushion	SK1259
14	Lower rubber cushion	SK210525
15	Mounting bracket	SK1372
16	Socket head bolt, compl.	SK212115
17	Split pin	SK1974
18	Spring hook	SK1436
19	Lubrication fitting	SK1989
20	Grease nipple compl	SK1976
21	Adjusting Screw	SK310505
22	Hexagon nut	SK212178

Fig.	Description	Part No. DR 37 CZ
23	Guide piece	SK320507
24	Eye bolt compl.	SK212204
25	Grease nipple	SK312111
26	Tubing compl.	SK3353008
27	Tubing clamp	SK312113
28	Spring Latch 1996 onwards	SK312152
29	Bolt for Spring Latch	SK3521/03
30	Spring for Latch	SK3121/59
31	Ball bearing	KLKDR41AS010K
32	Half moon compl.	SK370640
33a	Base plate (12mm) incl. 36, 37, 38	SK370630
33b	Base plate (16mm) incl. 36, 37, 38	SK370631
33c	Base plate (20mm) incl. 36, 37, 38	SK370632
34	Hex. bolt compl.	SK372104
35	Countersunk bolt compl.	SK372105
36	Lock out pin compl. with chain (old style)	SK370509
36a	Lock out pin compl. with R clip (new style)	SK370514
37	Tube park (old style)	SK370604
38	Tube lock out (old style)	SK370510
38a	Lockout tube (new style)	SK370515
39	Handle Extension	SK3105113
40	Internal Operating Handle	SK3105115
41	Head Bolt	SK1513
42	Extended Handle Bolt	SK242150
43	Cable Extension	SK352102

Repair Kits

Fig.	Repair Kits	Part No.
01, 02, 03, 10, 11	Repair kit for locking device	SK322150Z
01, 02, 03	Repair kit for locking device	SK322152Z
01, 02, 03, 08, 10, 11, 18	Repair kit for locking device	SK312150Z
13, 14, 16	Repair kit for rubber bearing	SK212169Z
28, 29, 30	Latch Kit	SK312152 KIT

DR37E Cast Top
Stabilised Fifth Wheel Assembly 2"



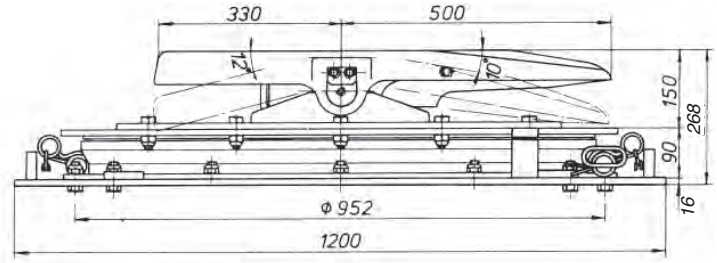

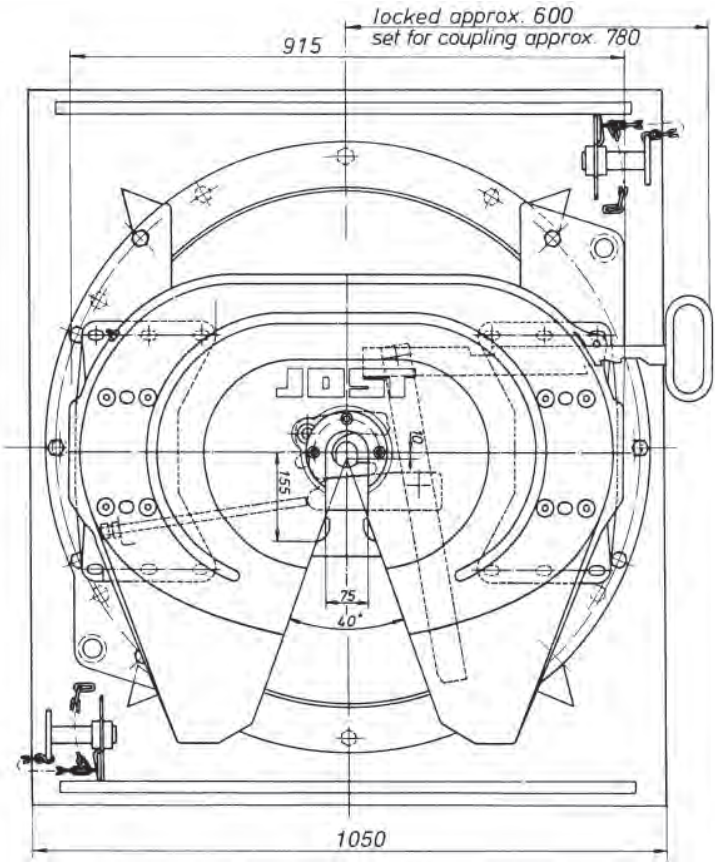

Application: **Highway work**
Tipper work

also available with:

16mm Base Plate	DR37E 16mm
20mm Base Plate	DR37E 20mm

*Note thicker base plate determines extra weight
**Note only available on weld on feet

D-Value	190 kN
Overall height	268 mm
Imposed load	20000 kgs
Gross comb. weight	135000 kgs
Weight approx. (for 12mm base plate)	394 kgs
Complies with ADR 62, 63	
Approval Number	JSK37E - CTA-036821 DR Subassembly - CTA-060153

Twin lockouts.

Flush bolt heads on mounting plate in chassis mounting zone. Wearing ring easily removed from above on JSK37E fifth wheel.

Spare parts for DR37E Cast Top

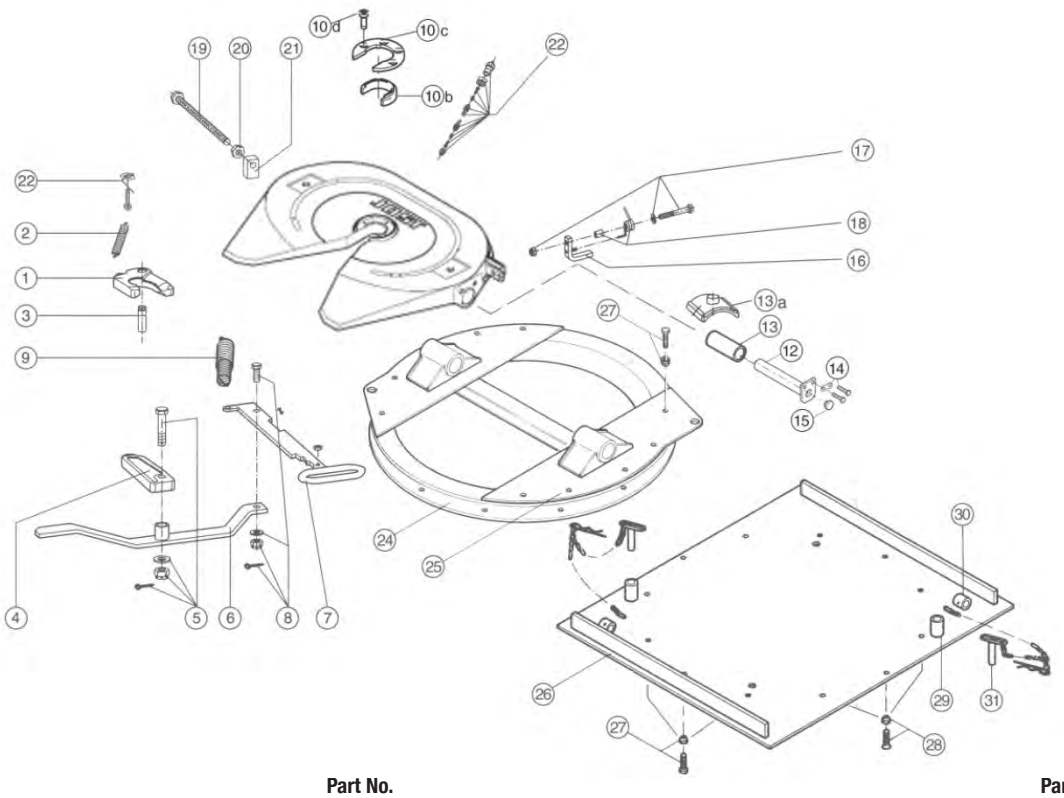

Fig.	Description	Part No. DR 37 E
01	Jaw	SK1489Z
02	Jaw Spring	SK847
03	Jaw Pivot	SK210667
04	Locking Bar	SK320506
05	Lock Bar Bolt	SK322101
06	Release Lever	SK310518
07	Operating Handle	SK310515
08	Head Bolt	SK1513
09	Double Tension Spring	SK310520
10a	Wear Ring Three Bolt	SK210519
10b	Wear Ring Four Bolt	SK310592
10c	Wear Ring Insert	SK310593
10d	Wear Ring Bolt	SK312155
11	Wear Ring Bolt	SK212107
12	Swivel Pin	SK310405
13	Pedestal Bush	SK290520
13a	Collar	SK310595
14	Swivel Pin Bolt	SK312128

Fig.	Description	Part No. DR 37 E
15	Swivel Pin Plug	JS 110112
16	Spring Latch	SK312152
17	Bolt for Spring Latch	SK352103
18	Spring for Latch	SK312159
19	Adjusting Screw	SK310597
20	Hex Nut	SK212178
21	Guide Piece	SK320507
22	Eye Bolt Complete	SK212204
23	Grease Line Complete	SK310802
24	Ball bearing	KLKDR41AS010K
25	Half moon cw 130mm Ped.	SK370511
26a	Base plate (12mm) incl. 56, 57, 58	SK370630
26b	Base plate (16mm) incl. 56, 57, 58	SK370631
26c	Base plate (20mm) incl. 56, 57, 58	SK370632
27	Hex. bolt compl.	SK372104
28	Countersunk bolt compl.	SK372105
29	Tube lock out (old style)	SK370510
29a	Tube lock out (new style)	SK370515
30	Tube park	SK370604
31	Lock out pin compl. with chain	SK370509
31a	Lock out pin compl. with R clip (new style)	SK370514

Repair Kits

Fig.	Repair Kits	Part No.
01, 02, 03	Repair kit for locking device	SK322152Z
12, 13, 13a, 14, 15	Repair kit for locking device	SK3121061
01, 02, 03, 08, 11, 23, 28	Repair kit for locking device	SK3121060Z
10b, 10c, 10d	Repair kit for wear ring	SK310594
16, 17, 18	Repair kit Latch	SK312152 KIT

DR37CX Cast Top
Double Row Stabilised Fifth Wheel Assembly



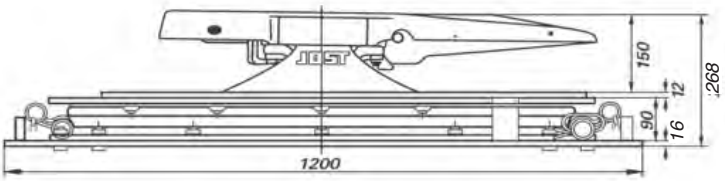

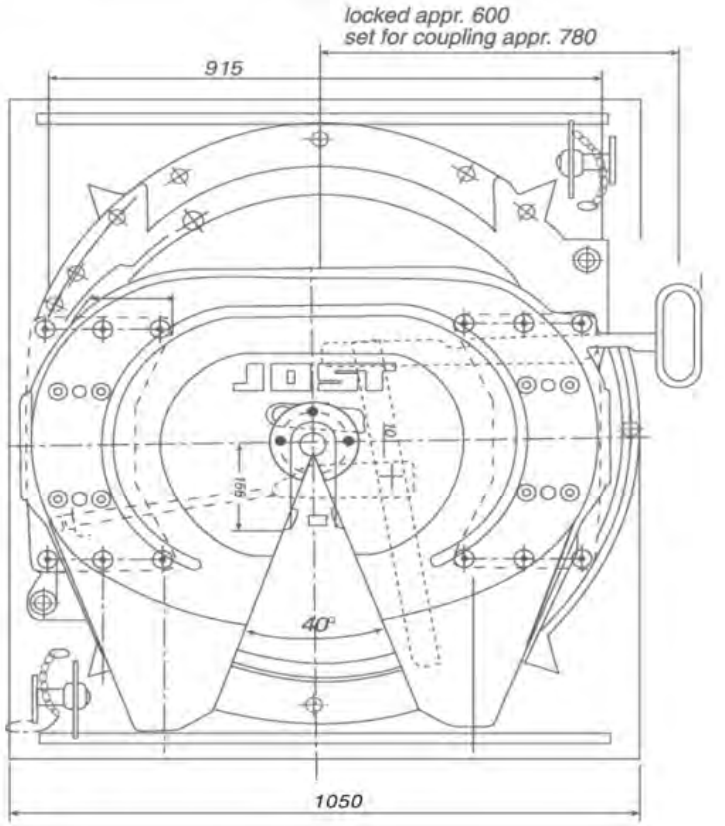

Application: **General freight**
Tankers
Fridge van
Stock crate

also available with:

16mm Base Plate	DR37CX 16mm
20mm Base Plate	DR37CX 20mm

*Note thicker base plate determines extra weight

Overall height	268 mm
Imposed load	24000 kgs
Weight approx. (for 12mm base plate)	405 kgs
D-Valve	240kN
Approval Number	JSK37CX - CTA-045374 DR Subassembly - CTA 060153

Twin lockouts.

Flush bolt heads on mounting plate in chassis mounting zone. Cast type unit equipped with external king pin grease point for additional lubrication to the jaw.

Wearing ring easily removed from above on JSK37CX fifth wheel.

Spare parts for DR37CX Cast Top

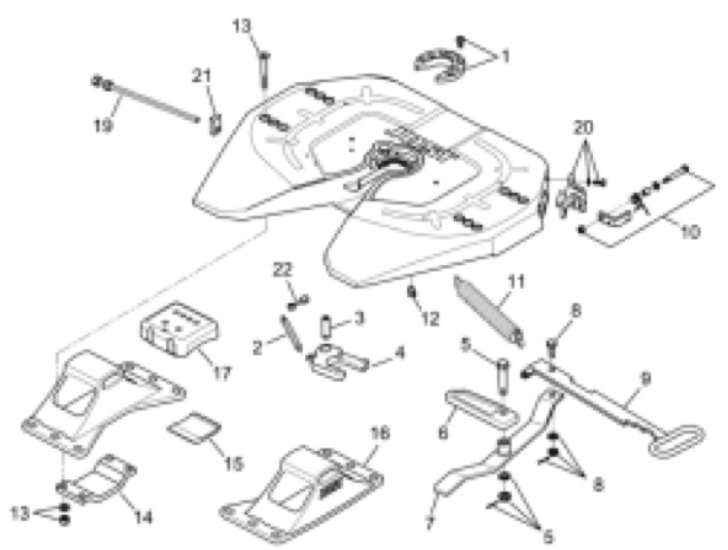

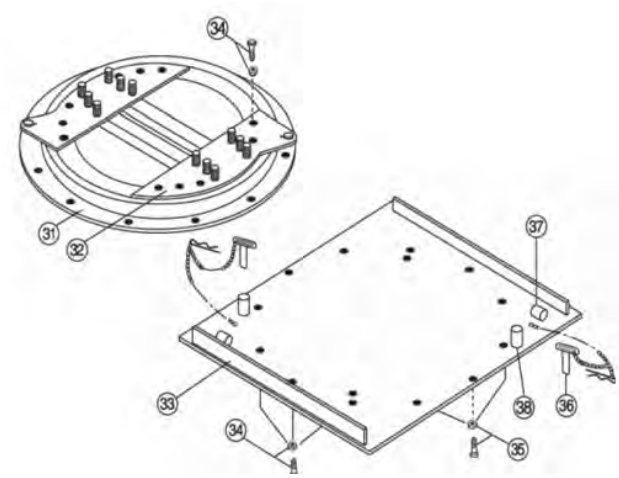

Fig.	Description	Code
01	Wearing ring and bolts	QR00269J00
02	Lock jaw spring	SK847
03	Pivot	SK210667
04	Locking	SK1489Z
05	Bolt (complete)	SK322101
06	Locking bolt	SK320506
07	Lever with bushing	SK310518
08	Head bolt	SK1513
09	Lever handle	SK3105/15
10	Latch kit	SK312152KIT
11	Double tension spring	SK3105/20
12	Fitting	SK312111
13	Complete countersunk bolt	SK212115
14	Mounting bracket	QR00215J01
15	Lower rubber cushion	SK21025
16	Pedestal (150mm)	SK210402X
16a	Pedestal (170mm)	SK210421X
16b	Pedestal (185mm)	SK210401X
16c	Pedestal (220mm)	SK210418X
16d	Pedestal (250mm)	SK210414X
16e	Pedestal (300mm)	SK210420

Fig.	Description	Code
17	Upper Rubber Cushion	SK1259
19	Adjustment screw	AD01148B80
20	Guide latch complete security	QR00270J00
21	Guide with thread	SK320507
22	Pin with eyelet	SK212204
31	Ball bearing	KLKDR41AS010K
32	Half mon complete	SK370640
33a	Base plate (12mm) inc 36, 37, 38	SK370630
33b	Base plate (16mm) inc 36, 37, 38	SK370631
33c	Base plate (20mm) inc 36, 37, 38	SK370632
34	Hex bolt complete	SK372104
35	Countersunk bolt complete	SK372105
36	Lock out pin compl with chain (old style)	SK370509
36a	Lock out pin compl with R clip (new style)	SK370514
37	Tube park (old style)	SK370604
38	Tube lock out (old style)	SK370510
38a	Tube lock out (new style)	SK370515

Repair Kits

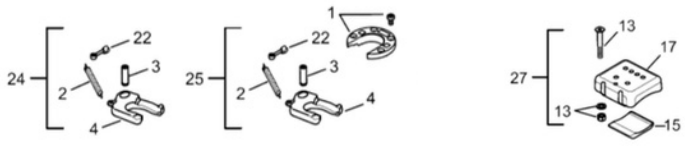

Fig.	Repair Kits	Part No.
24	Locking latch kit - items 2, 3, 4 e 22	SK322152Z
25	Kit locking claw - items 1, 2, 3, 4 e 22	SK322150CX
27	Base plate fastening kit - items 13, 15 e 17 (with 4 screws)	SK212169CX

JOST Base Plates to Suit Pin & Bush Type Fifthwheels

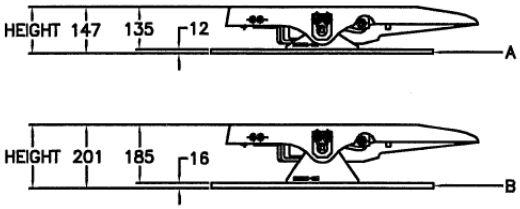

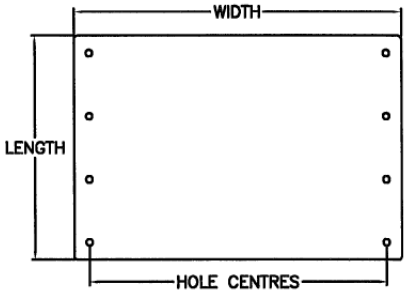

Part number	Style	Height (mm)	Length (mm)	Width (mm)	D-Value	Imposed load	Weight	Hole centre options	Notes
MP0115E TYPE	A	147	710	960/1050	190	20	74/80	880/953/Undrilled	135mm Pedestals, with 12mm Plate
MP0118/146MM	B	153	710	960/1050	190	20	94/102	880/953/Undrilled	135mm Pedestals, with 16mm Plate
MP0118/166MM	B	166	710	960/1050	190	20	96/104	880/953/Undrilled	150mm Pedestals, with 16mm Plate
MP0118/186MM	B	186	710	960/1050	190	20	101/109	880/953/Undrilled	170mm Pedestals, with 16mm Plate
MP0118/201MM	B	201	710	960/1050	190	20	101/109	880/953/Undrilled	185mm Pedestals, with 16mm Plate
MP0118/211MM	B	211	710	960/1050	190	20	102/110	880/953/Undrilled	195mm Pedestals, with 16mm Plate
MP0118/221MM	B	221	710	960/1050	190	20	104/112	880/953/Undrilled	205mm Pedestals, with 16mm Plate
MP0118/231MM	B	231	710	960/1050	190	20	105/113	880/953/Undrilled	215mm Pedestals, with 16mm Plate
MP0118/251MM	B	251	710	960/1050	190	20	107/115	880/953/Undrilled	235mm Pedestals, with 16mm Plate
MP0118/271MM	B	271	710	960/1050	190	20	110/118	880/953/Undrilled	255mm Pedestals, with 16mm Plate

Note: Height is measured with fifthwheel and pedestals assembled together, refer example above.
(Example, 16mm plate with 185 mm Pedestals= 201 mm overall)

If using a 37-027 narrow spec fifthwheel, 15 mm is to be added to the overall height. Other base plate options available. Custom styles and drilling available. For further information please contact your local **JOST** branch

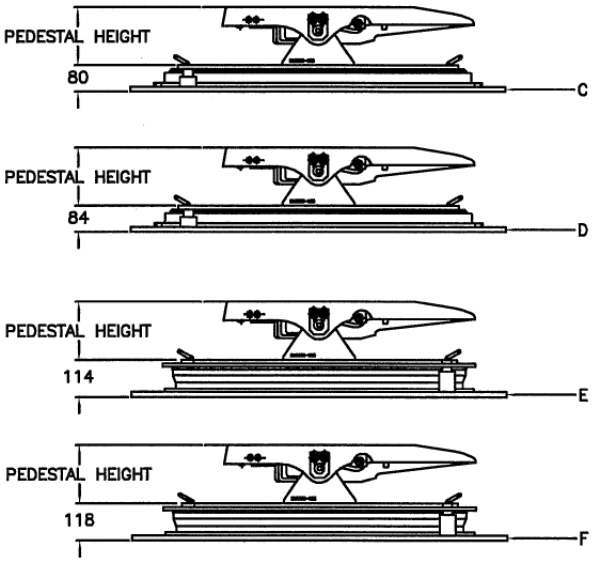

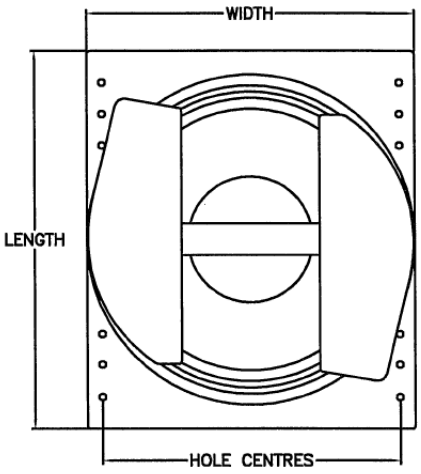

Part Number	Style	Height (mm)	Length (mm)	Width (mm)	D-Value	Imposed Load	Weight	Hole Centres	Notes
LP36AV2LT12	C	80 + Peds	1200	1050	190	20	235	Undrilled	Low Profile Single Row–Wide Chassis
LP36AV2LT16	D	84 + Peds	1200	1050	190	20	275	Undrilled	Low Profile Single Row–Wide Chassis
LP36AV2LT16 (KEN)	D	84 + Peds	1200	1050	190	20	275	953	Low Profile Single Row–Wide Chassis
DR36AV2LT12	E	114 + Peds	1200	1050	190	20	288	Undrilled	Heavy Duty Double Row–Wide Chassis
DR36AV2LT16	F	118 + Peds	1200	1050	190	20	295	Undrilled	Heavy Duty Double Row–Wide Chassis
DR36AV2LT16 (KEN)	F	118 + Peds	1200	1050	190	20	295	953	Heavy Duty Double Row–Wide Chassis
LP36AV216LTINV	D	84 + Peds	1200	960	190	20	261	Undrilled	Inverted B/Race for Narrow Chassis
LP36AV216LTINV	D	84 + Peds	1200	960	190	20	261	880	Inverted B/Race for Narrow Chassis
LP37027LT16	D	84 + Peds	1200	1050	200	20	265	Undrilled	Low Profile Single Row–Wide Chassis

JOST Base Plates to Suit Cushion "C" Type Fifthwheels

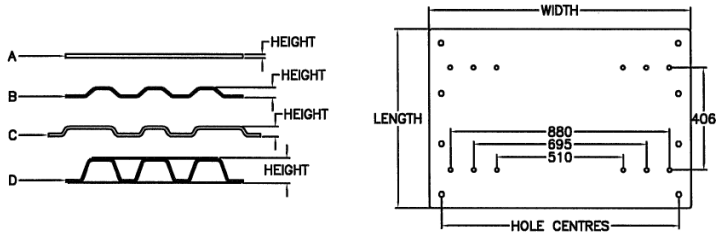

Part number	Style	Height (mm)	Length (mm)	Width (mm)	D-Value	Imposed load	Weight	Hole centre options	Notes
MP0115	A	12	710	1050	160	20	72	Undrilled	Standard Chassis Width "C" Type
MP0118	A	16	710	1050	260	36	94	Undrilled	Standard Chassis Width "C" Type
MP0118ACTROS	A	16	700	960	260	36	B6	Undrilled	Narrow Chassis Width "C" Type
MP0118KEN/IH	A	16	710	1050	260	36	94	953	Standard Chassis Width "C" Type
MPD118SCANIA	A	16	700	960	260	36	86	880	Narrow Chassis Width "C" Type
MP0118/42	A	16	710	1050	260	36	94	953	Suit JSK42–Standard Chassis Width
MP0118/JSK38	A	16	710	1050	260	36	90	953	Cutout to Suit JSK38/160
MP0119/KEN/IH	A	20	710	1050	260	36	120	953	Standard Chassis Width "C" Type
MP0119SCANIA	A	20	700	960	260	36	115	880	Narrow Chassis Width "C" Type
MP2101	B	22	710	960	190	20	44	880	Narrow Chassis Width "C" Type
MP2103/350	B	22	710	1050	190	20	48	UnDrilled	Standard Chassis Width "C" Type
MP2103/350KEN	B	22	710	1050	190	20	48	953	Standard Chassis Width "C" Type
MP0120	A	25	800	1050	300	50	165	Undrilled	Suit JSK50 Wide Chassis
MP0120KWORTH	A	25	800	1050	300	50	16S	953	Suit JSK50 Wide Chassis
MP4111/350	B	40	700	1050	190*	20*	48	Undrilled	Standard Chassis Width "C" Type
MP4111/350KEN	B	40	700	1050	190*	20*	4B	953	Standard Chassis Width "C" Type
MP4111/350SCA	B	40	700	960	190*	20*	45	880	Narrow Chassis Width "C" Type
MP4126	C	40	850	1050	260	36	B1	Undrilled	Standard Chassis Width "C" Type
MP5111SCANIA	B	5o	700	960	190*	20*	54	880	Narrow Chassis Width "C" Type
MP5111/KEN	B	5o	700	1050	190*	20*	57	953	Standard Chassis Width "C" Type
MPA6503	D	65	710	1050	190*	20*	75	Undrilled	Standard Chassis Width "C" Type
MPA6503KEN	D	65	710	1050	190*	20*	78	953	Standard Chassis Width "C" Type
MP1101	D	100	765	970	190*	20*	79	Undrilled	Narrow Chassis Width "C" Type
MP1103	D	100	710	1050	190*	20*	85	Undrilled	Standard Chassis Width "C" Type

* D-value and imposed load rating reduced if combination height exceeds 300 mm

Other base plate options available. Custom styles and drilling available. For further information please contact your local **JOST** branch

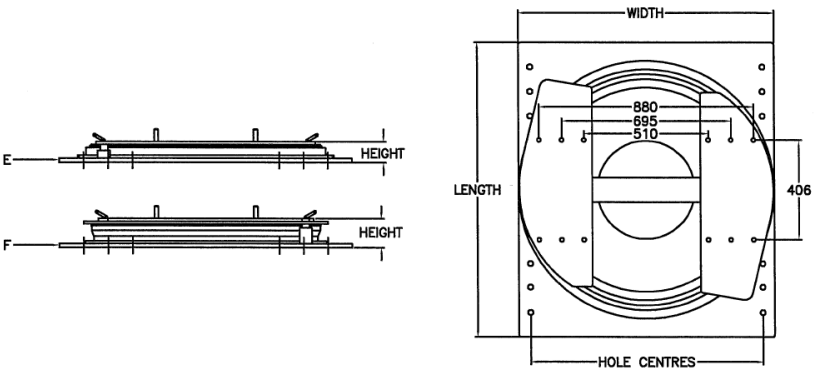

Part Number	Style	Height (mm)	Length (mm)	Width (mm)	D-Value	Imposed Load	Weight	Hole Centres	Notes
LP36CVLT12	E	80	1200	1050	190	20	235	Undrilled	Low Profile Single Row–Wide Chassis
LP36CVLT16	E	84	1200	1050	240	24	275	Undrilled	Low Profile Single Row–Wide Chassis
LP36CVLT16 (KEN)	E	84	1200	1050	240	24	275	953	Low Profile Single Row–Wide Chassis
DR36CVLT12	F	114	1200	1050	190	20	255	Undrilled	Heavy Duty Double Row–Wide Chassis
DR36CVLT16	F	118	1200	1050	260	36	295	Undrilled	Heavy Duty Double Row–Wide Chassis
DR36CVLT16 (KEN)	F	118	1200	1050	260	36	295	953	Heavy Duty Double Row–Wide Chassis
LP36CVLTSCANIAV8	E	84	1000	960	240	24	258	880	Inverted B/Race Suits Scania V8
LPCV16LTINVSCA	E	84	1200	960	240	24	261	Undrilled	Inverted B/Race For Narrow Chassis
LPCV16LTINVSCA	E	84	1200	960	240	24	261	880	Inverted B/Race For Narrow Chassis
DRCV16/LTSCAN	F	118	1200	1000	260	36	286	880	Heavy Duty Double Row–Narrow Chassis
DR36CVLTSCANV8	F	118	1100	1000	260	36	280	880	Heavy Duty Double Row–Narrow Chassis

Easy Connect

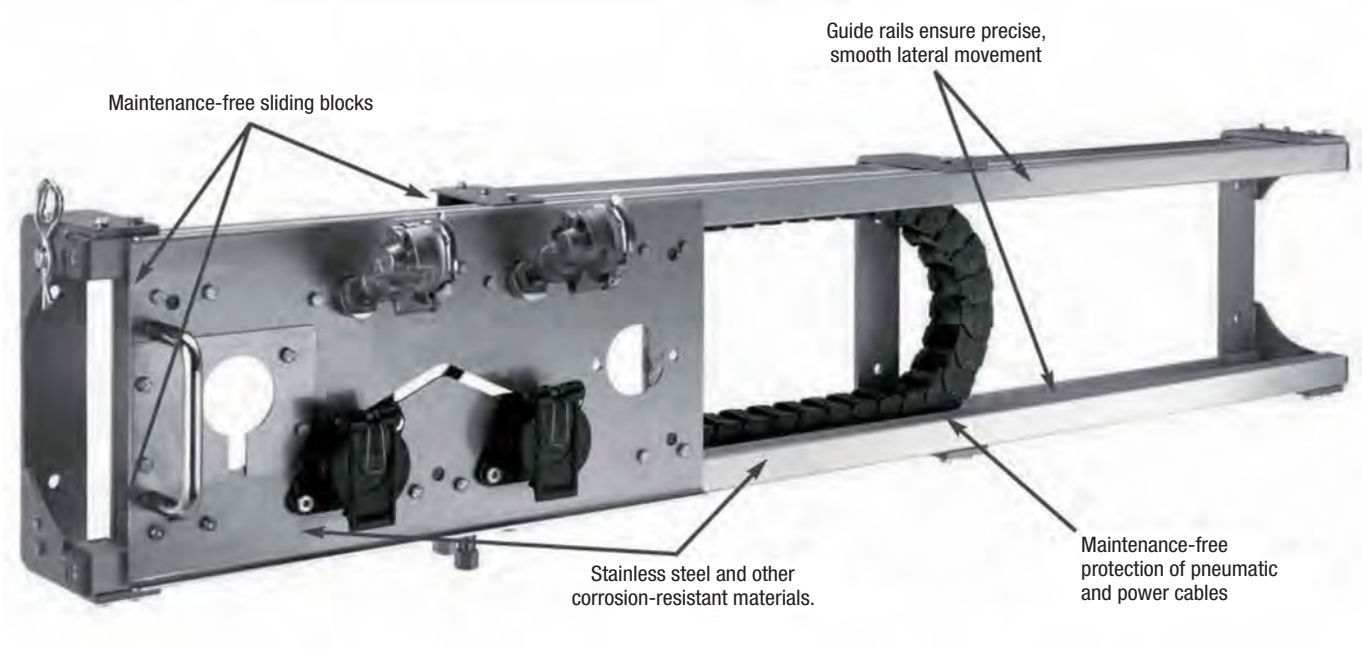

Fast, simple, secure

Coupling and uncoupling without the need to raise or lower the unit

- Fast and easy attachment and disconnection of pneumatic and power cables.
- Access from side of vehicle to alleviate OH & S issues
- Easy Connect is universal and directly fits most trailer models
- Prevents damage to spiral connections (suzies, see illustration below)

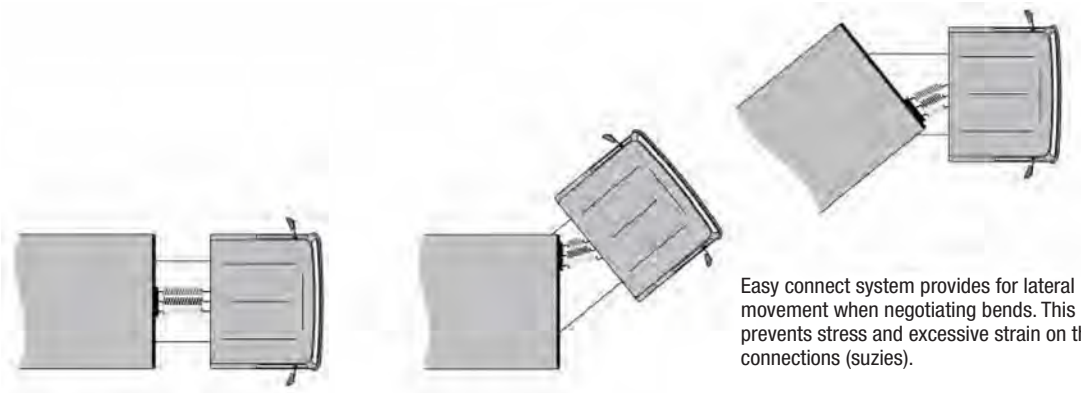

Easy connect system provides for lateral movement when negotiating bends. This prevents stress and excessive strain on the spiral connections (suzies).

Part No: SKE0105000000

Heavy Duty Fifth Wheel Couplings
3½" and 2"





Locking Device

locked

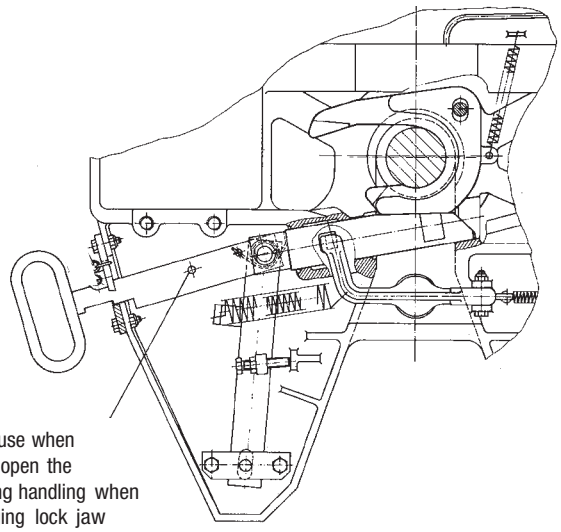

hole to use when locking open the operating handling when exchanging lock jaw

set for coupling

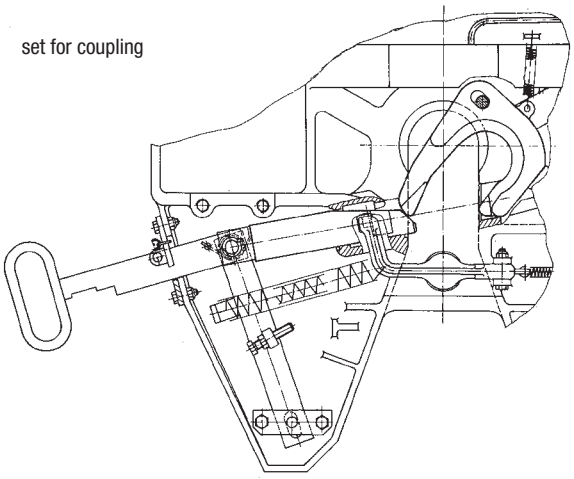

Type of Mounting

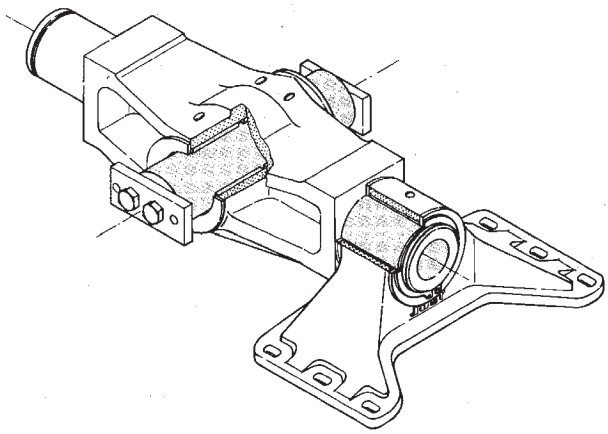

JSK38G cardan mounting

- wear resistant bushes
- lateral movement up to a max. of 7° for off road operation.
- lateral movement can be limited to approx. 0° for highway operation.

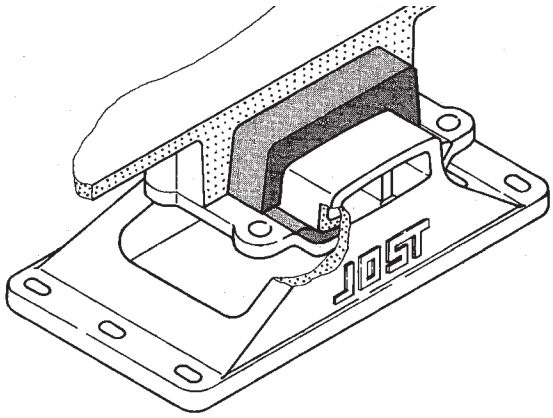

JSK38C, JSK39C, JSK38DV
Rubber mounting

- shock absorbing by large rubber pads slack and maintenance free
- Oil and grease resistant

Operating and Maintenance Instructions for JOST Fifth Wheel Couplings

Types JSK38C, JSK38DV, JSK38G, JSK39C, JSK50 and JSK52

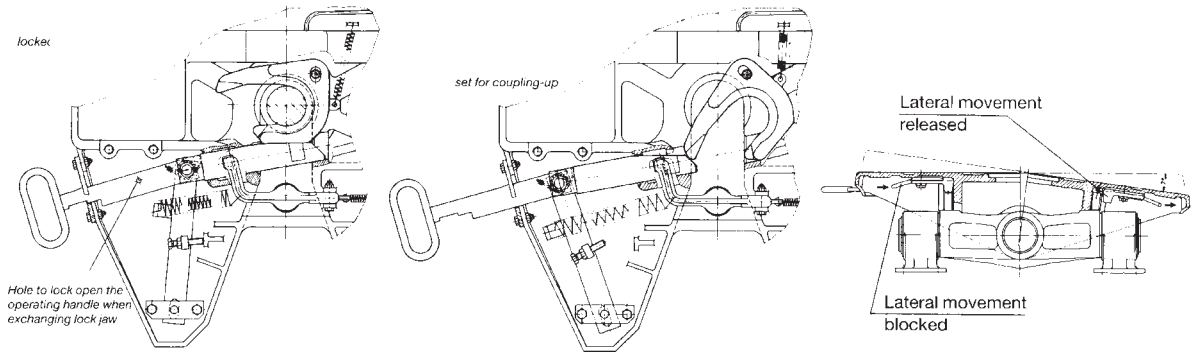

Operating instructions

The outfit should be parked on a flat and even road surface.

Coupling-up:

1. The fifth wheel must be in the reset position, i.e. the end of the operating handle standing out approx. 300 mm otherwise: Raise secondary safety latch' **(A)** and move handle forward to unlock **(B)**. Pull handle to end position **(C).**



2. Skid plate of semi trailer should be approx. 50 mm lower than the top of the fifth wheel.
IMPORTANT: Loss of pressure in the air suspension of the trailer can alter the height of the king pin.

3. Reverse tractor - the mechanism locks automatically.



4. Check that the skid plate is resting on the fifth wheel plate with no gap between the two.

5. Ensure secondary safety latch is engaged.
IMPORTANT: The secondary safety latch in the secured position ensures the locking mechanism is closed. If secondary safety latch is in raised position, the coupling-up procedure must be repeated.



Un-coupling:

1. Raise secondary safety latch **(A)**. Move handle forward to unlock **(B)**. Pull handle to end position **(C)**.

2. Drive tractor away. The fifth wheel mechanism will automatically assume the coupling-up position **(D)**.



Lateral movement on type JSK38G

The lateral movement should only be engaged for off-road use. On the road, and especially at higher speeds, it must be blocked for safety reasons.

To set the lateral movement:
For normal road Use:

1. Release the hex bolts (2 each side - width over flats 19 mm).
2. Push both blocks into the end of the oblong hole.
3. Re-tighten hex bolts (torque 80 Nm).

For off-road use:

1. Release the hex bolts (2 each side - width over flats 19 mm).
2. Pull both blocks out to the end of the oblong hole.
3. Re-tighten the hex bolts (torque 80 Nm).

Maintenance instructions:

1. Uncouple semi-trailer at least once a week, certainly after more than 5000 km. Clean semi-trailer skid plate and fifth wheel plate. Lubricate fifth wheel plate, locking mechanism, fifth wheel throat and king pin, with heavy duty grease. We recommend the use of high pressure grease (EP) with MoS2 or graphite additive, for example BP L21, M, BP HTEP 1, BP LS 2, Esso universal grease M, Shell Retinax AM. Check operating handle and release lever pivots for free movement - clean and lubricate.

2. The bearings of the lock lever (item 28) and of the pedestals of the JSK38 G-1 and the pivot bearing of the JSK50 are to be regreased through grease nipples provided at each maintenance interval. The rubber cushions of the JSK38 C-1 are maintenance free. According to operating conditions we recommend checking parts for wear at 50,000 and 100,000 km distance driven.

JSK38DV90 - Rubber Bearing

A heavy duty fifth wheel coupling for operation under arduous conditions.



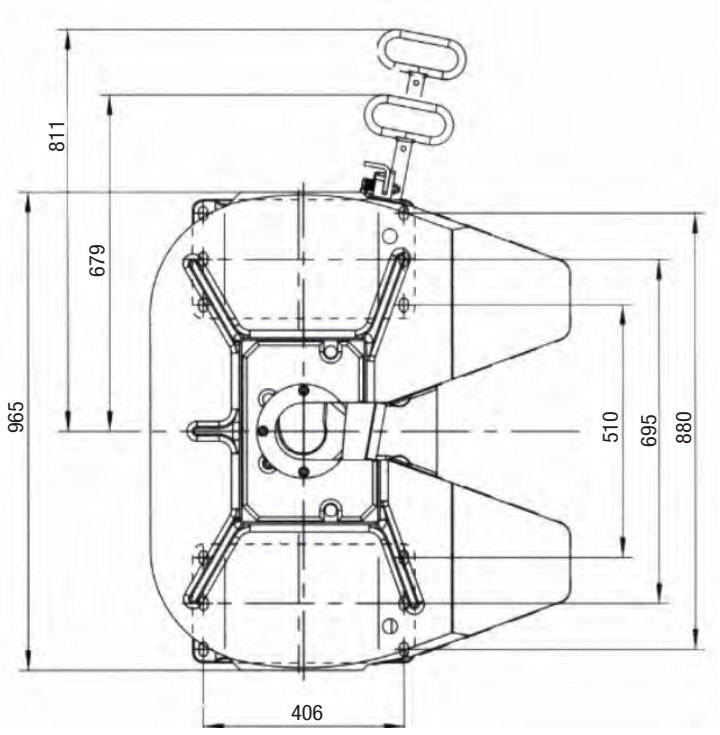

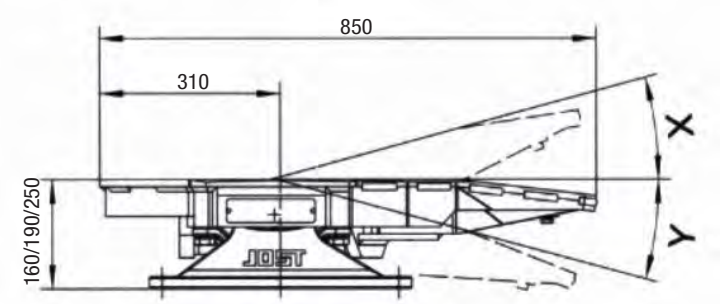

Increased load (up to 28,000kg). With rubber bearing (model “C”): rubber cushions are shock- absorbent and maintenance-free.

Technical specification:

Rubber bearing

The fifth wheel coupling complies with the directives/standards as per 94/20/EC - Class S, DIN 74084 and ISO 3842. Suitable for 3,5" (90) king pins as per 94/20/EC, DIN 74083 and ISO 4086. Fitted on a mounting plate.

Imposed weight	28,000 kg
D-value	260 kN
Weight	204 kg
CRN	36688

Spare parts for fifth wheel couplings Type JSK38DV90

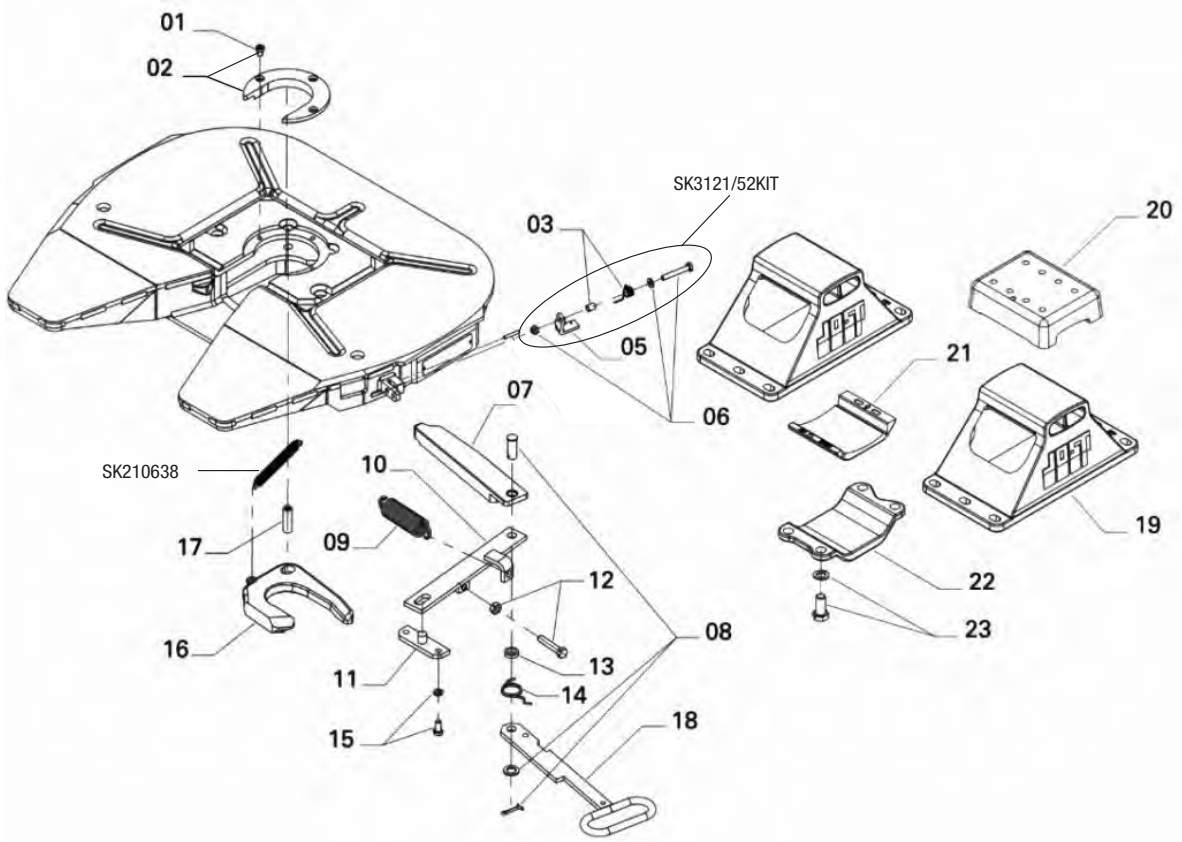

Fig.	Description	Part No.
01	Socket head bolt	SK242108
02	Wearig ring, complete	SK242156
03	Spring noose, complete	SK312159
04	Jaw tension spring	SK210638
05	Latch kit, complete	SK312152 KIT
06	Hexagon bolt, complete	SK352103
07	Locking bar	SKE003750000
08	Bar bolt, complete	SKE003760001
09	Double tension spring	SK240523
10	Lever	SK240504
11	Bearing	SK240515
12	Hexagon bolt, complete	SK242152
13	Washer	SK240519
14	Spring noose	SK240509
15	Hexagon bolt, complete	SK244153
16	Lock jaw	SK240514Z
17	Pivot	SK240518
18	Handle	SKE003740000

Fig.	Description	Part No.
19a	Pedestal 160mm	SK240405
19b	Pedestal 190mm	SK240401
19c	Pedestal 250mm	SK240404
20	Rubber cushion, upper	SK2006
21	Rubber cushion, lower	SK2007
22	Bridge	SK2005
23	Hexagon bolt, complete	SK242155

Repair Kits

Fig.	Repair Kits	Part No.
01, 02, 04, 09, 16, 17	Repair kit for lock 3.5"	SK242176
20, 21, 23	Repair kit for bearing	SK242178
05, 03, 06	Repair kit for latch, complete	SK312152 KIT

JSK38C1 / JSK38C2" - Rubber Mounting
Interchangeable fifth wheel



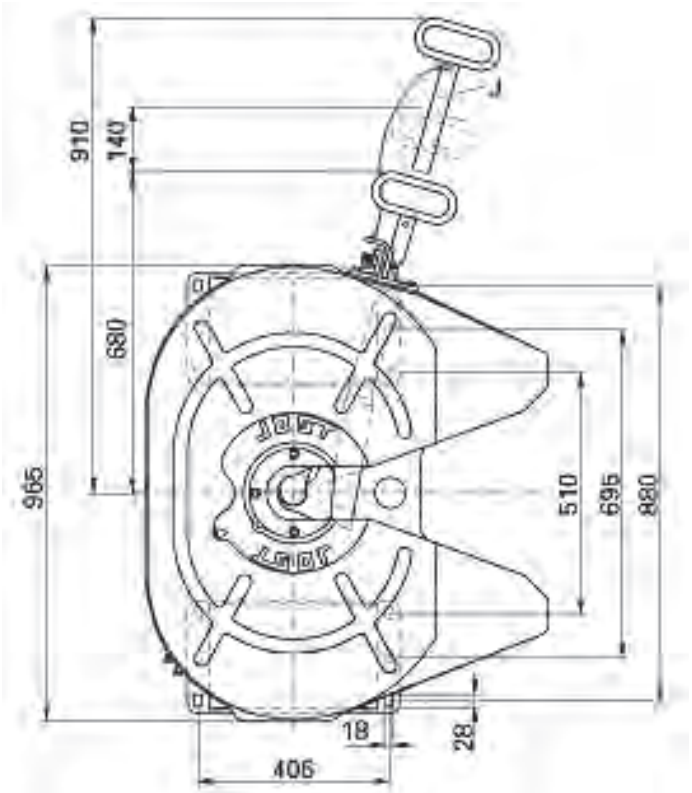

A heavy duty fifth wheel coupling for operation under arduous conditions.

The well known **JOST** locking device together with the maintenance free rubber cushions ensures a high degree of stability and safety on the road.

This fifth wheel is available for use with 3½" and 2" king pins.

The conversion of a 3½" or 2" locking mechanism or vice versa can easily be carried out with standard tools, without removing the fifth wheel coupling from the truck.

THREE HEIGHT OPTIONS

160 mm optional	(Bolt on/weldable feet)
190 mm optional	(Bolt on/weldable feet)
250 mm optional	(Bolt on only)

Type	King pin	Imposed load	D-value	Weight	Approval Number
JSK38C1	3½"	36 000kg	260kN	190kg	E1 55R-01 0471
JSK38C2"	2"	28 000kg	170kN	190kg	E1 55R-01 0472

Mounting must be carried out in accordance with our instructions.

The right to alter specifications is reserved.

Spare parts for Type JSK38C1 / Type JSK38C2"

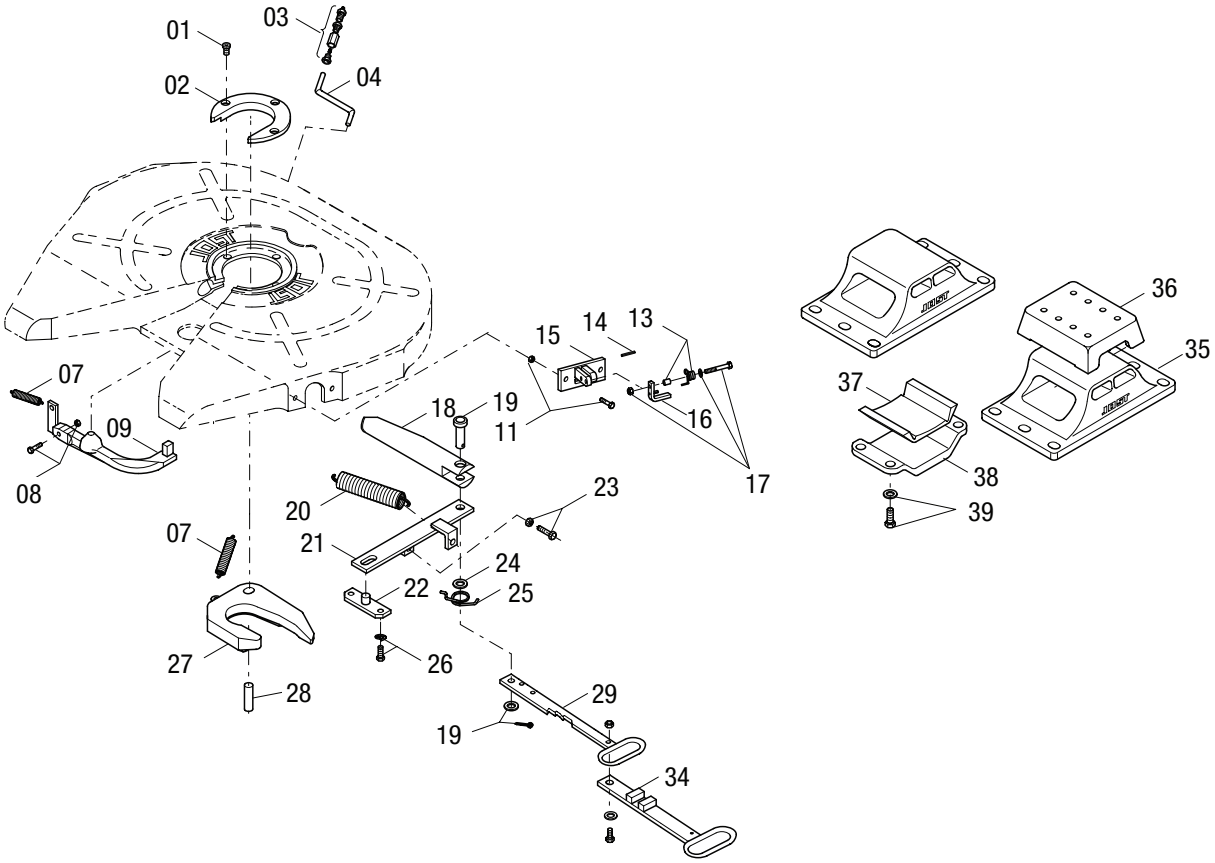

Fig.	Description	Part No.
01	Socket head bolt	SK242108
02	Wearing ring 3½", compl. with 01	SK242156
02	Wearing ring 2", compl. with 01	SK242157
03	Nut and bolt	SK1989
04	Lubrication tube	SK220512
07	Tension spring	SK210638
08	Hexagon bolt, compl.	SK242151
09	Latch	SK240527
11	Hexagon bolt, compl.	SK242150
13	Spring noose with spacer	SK312159
15	Latch holder, compl. with 14	SK2405084
16	Latch, compl. incl. 13,14,17	SK312152 KIT
17	Hexagon bolt, compl.	SK352103
18	Locking bar	SK240501
19	Bar bolt, compl.	SK212225
20	Double tension spring	SK240523
21	Lever	SK240504SA
22	Bearing	SK240515

Fig.	Description	Part No.
23	Hexagon bolt, compl.	SK242152
24	Washer	SK240519
25	Spring noose	SK240509
26	Hexagon bolt, compl.	SK242153
27	Lock jaw 3½"	SK240514
27	Lock jaw 2"	SK240513
27a	Lock jaw, 3½" (Greaseable)	SK240514Z
27a	Lock jaw, 2" (Greaseable)	SK240513Z
28	Pivot	SK240518
29	Handle (standard version)	SK2405066
34	Handle, extended	SK2405066 EXT
35a	Pedestal 160mm	SK240405
35b	Pedestal 190mm	SK240401
35c	Pedestal 250mm	SK240404
36	Rubber cushion, upper	SK2006
37	Rubber cushion, lower	SK2007
38	Bridge	SK2005
39	Hexagon bolt, compl.	SK242155

Repair and Conversion Kits

Fig.	Repair Kits	Part No.
01, 02, 07, 20, 27,28	Repair kit for lock 3½"	SK242176
01, 02, 07, 20, 27,28	Repair kit for lock 2"	SK242177
36, 37, 39	Repair kit for bearing	SK242178
	Conversion Kits	
01, 02, 07, 27	Conversion kit from 3½" to 2" lock	SK242198
01, 02, 07, 27	Conversion kit 2" to 3½"	SK242199

LP38C116016, LP38C119016 Cast Top
LP38C216016, LP38C219016 Cast Top
Low profile stabilised fifth wheel assembly



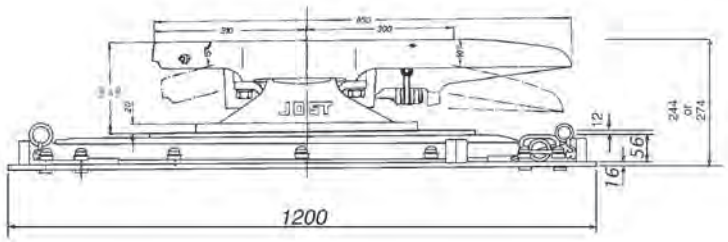

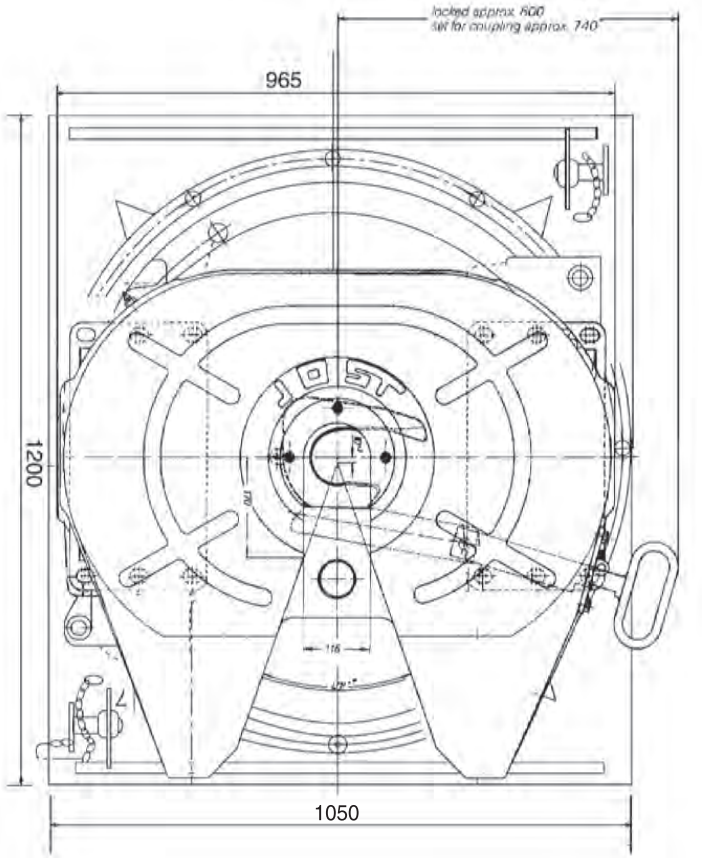

Heavy duty Applications: **Stock crate**
Fridge van
General freight
Tankers

Standard with	16 mm base plate
optional:	20 mm base plate
	LP38C 20mm

*Note thicker base plate determines extra weight and height.

D-Value	
JSK38C1W	240 kN
JSK38C2W	170 kN
Overall height	
(with 190 mm Feet)	274 mm
(with 160 mm Feet)	244 mm
Imposed load	20000 kgs
Weight approx.	444 kgs
(for 16 mm base plate)	

Approval Number	
JSK38C1	ECE E1 55R-01 0471
JSK38C2	ECE E1 55R-01 0472
LP Subassembly	CTA-047151

Twin lockouts.

Flush bolt heads on mounting plate in chassis mounting zone. Cast type unit equipped with JSK38 fifth wheel extra heavy duty unit. Jaws sizes can be changed from 50 mm or 90 mm diameter. Mounting must be carried out in accordance with our instructions.

Spare parts for LP38C Cast Top

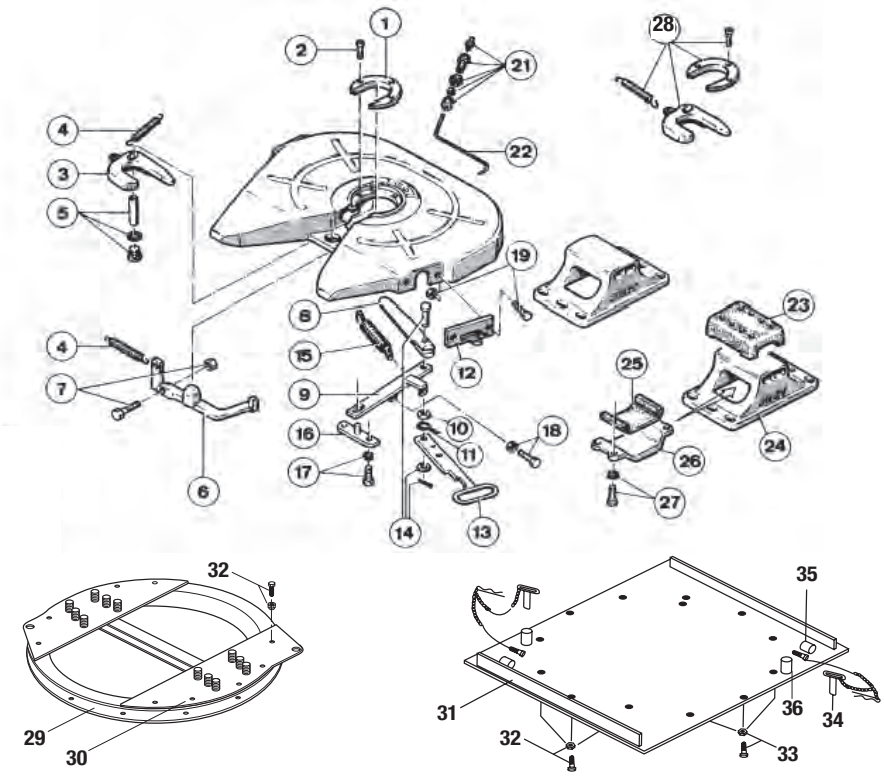

Fig.	Description	Part No.
01	Wearing ring 3½" compl. with item 2	SK242156
01	Wearing ring 2" compl. with item 2	SK242157
02	Socket head bolt	SK242108
03	Lock jaw 3½"	SK240514
03	Lock jaw 2"	SK240513
04	Lock jaw spring	SK210601
05	Bolt complete	SK242154
06	Stopper	SK240527
07	Hexagon head bolt	SK242151
08	Locking bar	SK240501
09	Lever	SK240504
10	Disc	SK240519
11	Spring loop	SK240509
12	Support bracket	SK2405084
13	Operating handle	SK240502
14	Locking bar bolt	SK212114
15	Double tension spring	SK240523
16	Support	SK240515
17	Hexagon head bolt complete	SK242153
18	Hexagon head bolt complete	SK242152
19	Hexagon head bolt complete	SK242150
20	Spring hook complete	SK1436

Fig.	Description	Part No.
21	Grease nipple complete	SK1976
22	Grease tube	SK220512
23	Upper rubber cushion	SK2006
24a	Pedestal 160 mm Bolt on/weldable	SK240405
24b	Pedestal 190 mm Bolt on/weldable	SK240401
24c	Pedestal 250 mm Bolt on/weldable	SK240404
25	Lower rubber cushion	SK2007
26	Mounting bracket	SK2005
26a	For use with 160mm pedestals	SK20051
27	Hexagon head bolt	SK242155
29	Ball bearing	KDL 9006W
30	Half moon compl.	SK370629
31	Base plate (16mm) incl. 34, 36	SK370616
31b	Base plate (20mm) incl. 34, 36	SK370620
32	Hex. bolt compl.	SK372104
33	Countersunk bolt compl.	SK372105
34	lock out pin compl. old style	SK370610
34a	Lock out pin, new style	SK370609
35	Tube park old style	SK370604
36	Tube lock out	SK370605
36b	Tube lock out, new style	SK370504

Repair and Conversion Kits

Fig.	Repair Kits	Part No.
01, 03, 04, 05, 15, 20	Repair kit for locking device 3½"	SK242176
01, 03, 04, 05, 15, 20	Repair kit for locking device 2"	SK242177
23, 25, 27	Repair kit for rubber bearing	SK242178
	Conversion Kits	
28a	Kit to convert 3½" to 2" locking mechanism	SK242198
28b	Kit to convert 2" to 3½" locking mechanism	SK242199

DR38C116016, DR38C119016 Cast Top
DR38C216016, DR38C219016 Cast Top
Double Row stabilised fifth wheel assembly

with mounting pattern according to DIN standard 74081 and 74084



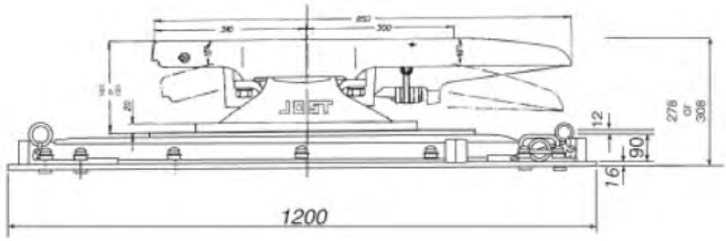

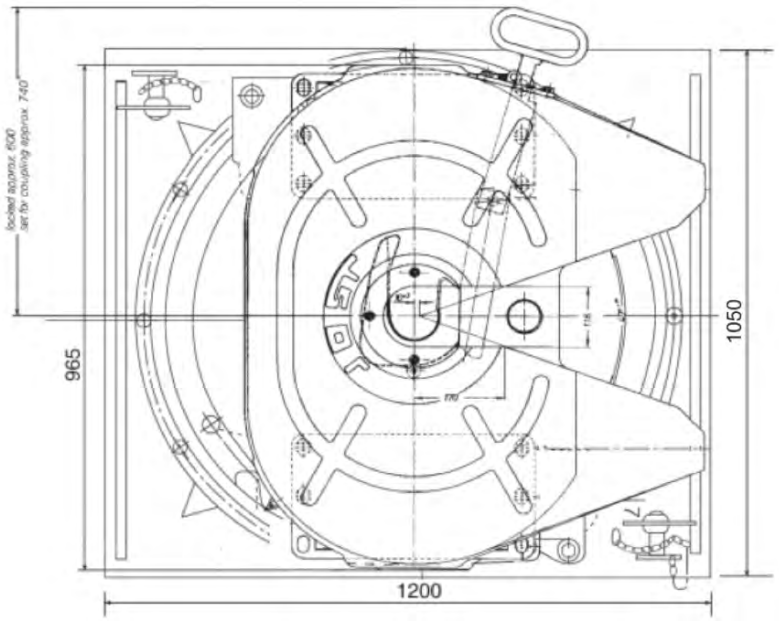

Heavy duty Applications: **Stock crate**
Fridge van
General freight
Tankers

Standard with	16 mm base plate
optional:	20 mm base plate
	DR38C 20mm

*Note thicker base plate determines extra weight and height.

D-Value	
JSK38C1W	260 kN
JSK38C2W	170 kN
Overall height	
(with 190 mm Feet)	308 mm
(with 160 mm Feet)	278 mm
Imposed load	20000 kgs
Weight approx.	472 kgs
(for 16mm base plate)	
Approval Number	
JSK38C1	ECE E1 55R-01 0471
JSK38C2	ECE E1 55R-01 0472
DR Subassembly	CTA-060153

Twin lockouts.

Flush bolt heads on mounting plate in chassis mounting zone. Cast type unit equipped with JSK38 fifth wheel extra heavy duty unit . Jaws sizes can be changed from 50 mm or 90 mm diameter. Mounting must be carried out in accordance with our instructions.

Mounting must be carried out in accordance with our instructions.

The right to alter specifications is reserved.

Spare parts for DR38C1, DR38C2, DR38C1160, DR38C2160

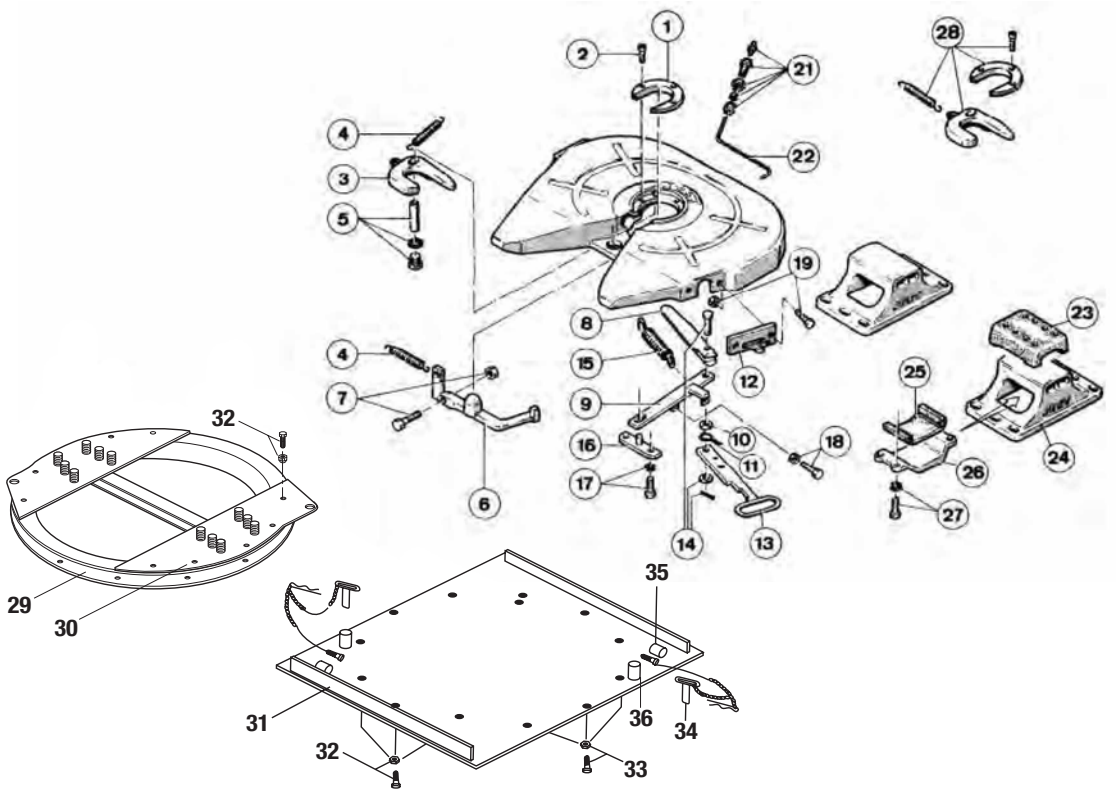

Fig.	Description	Part No.
01	Wearing ring 3½" compl. with item 2	SK242156
01	Wearing ring 2" compl. with item 2	SK242157
02	Socket head bolt	SK242108
03	Lock jaw 3½"	SK240514
03	Lock jaw 2"	SK240513
04	Lock jaw spring	SK210601
05	Bolt complete	SK242154
06	Stopper	SK240527
07	Hexagon head bolt	SK242151
08	Locking bar	SK240501
09	Lever	SK240504
10	Disc	SK240519
11	Spring loop	SK240509
12	Support bracket	SK2405084
13	Operating handle	SK240502
14	Locking bar bolt	SK212114
15	Double tension spring	SK240523
16	Support	SK240515
17	Hexagon head bolt complete	SK242153
18	Hexagon head bolt complete	SK242152
19	Hexagon head bolt complete	SK242150

Fig.	Description	Part No.
21	Grease nipple complete	SK1976
22	Grease tube	SK220512
23	Upper rubber cushion	SK2006
24a	Pedestal 160 mm Bolt on/weldable	SK240405
24b	Pedestal 190 mm Bolt on/weldable	SK240401
24c	Pedestal 250 mm Bolt on/weldable	SK240404
25	Lower rubber cushion	SK2007
26	Mounting bracket	SK2005
26a	For use with 160mm pedestals	SK20051
27	Hexagon head bolt	SK242155
29	Ball bearing	KLKDR4100010K
30	Half moon compl.	SK370440
31	Base plate (16mm) incl.56,57,58	SK370631
31b	Base plate (20mm) incl.56,57,58	SK370632
32	Hex. bolt compl.	SK372104
33	Countersunk bolts compl	SK372105
34	Lock out pin, old style	SK370509
34a	Lock out pin, new style	SK370514
35	Tube park	SK370604
36	Tube lock out, old style	SK370510
36a	Tube lock out, new style	SK370515

Repair and Conversion Kits

Fig.	Repair Kits	Part No.
01, 03, 04, 05, 15	Repair kit for locking device 3½"	SK242176
01, 03, 04, 05, 15	Repair kit for locking device 2"	SK242177
23, 25, 27	Repair kit for rubber bearing	SK242178
	Conversion Kits	
28a	Kit to convert 3½" to 2" locking mechanism	SK242198
28b	Kit to convert 2" to 3½" locking mechanism	SK242199

JSK38G1 / JSK38G2" – Cardan Mounting

with mounting pattern according to DIN 74 081 and 74 084



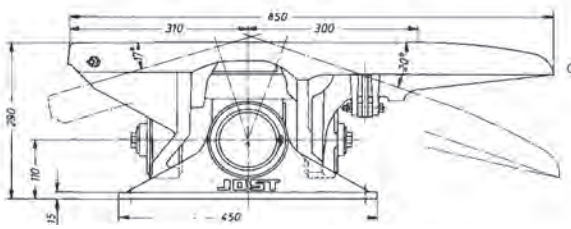

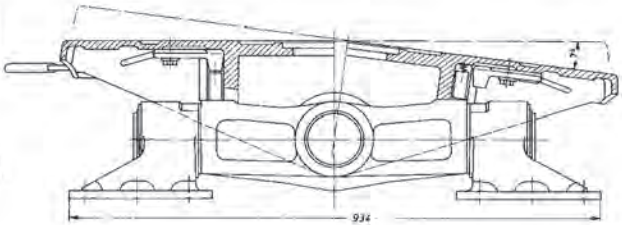

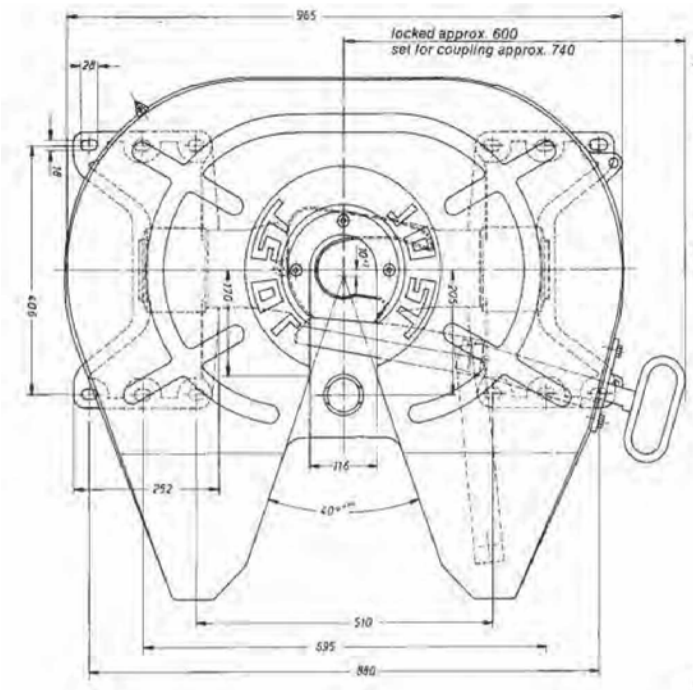

A heavy duty fifth wheel coupling for operation under arduous conditions.

The well known **JOST** locking device together with the maintenance free cardan mounting ensures a high degree of stability and safety on the road and off road.

The lateral movement of 7° can be reduced to 0° for normal road operation.

This fifth wheel is available for use with 3½" & 2" king pins.

The conversion of 2" & 3½" locking mechanism or vice versa can easily be carried out with standard tools, without removing the fifth wheel coupling from the tractive unit. Suitable for all types of rear axle steering systems.

Type	King pin	Imposed load	D–value	Weight	Approval Number
JSK38G1	3½"	36 000kg	260kN	265kg	ECE E1 55R-01 0336
JSK38G2"	2"	28 000kg	170kN	265kg	ECE E1 55R-01 0443

The right to alter specifications is reserved.

Spare parts for Type JSK38G1 / Type JSK38G2"

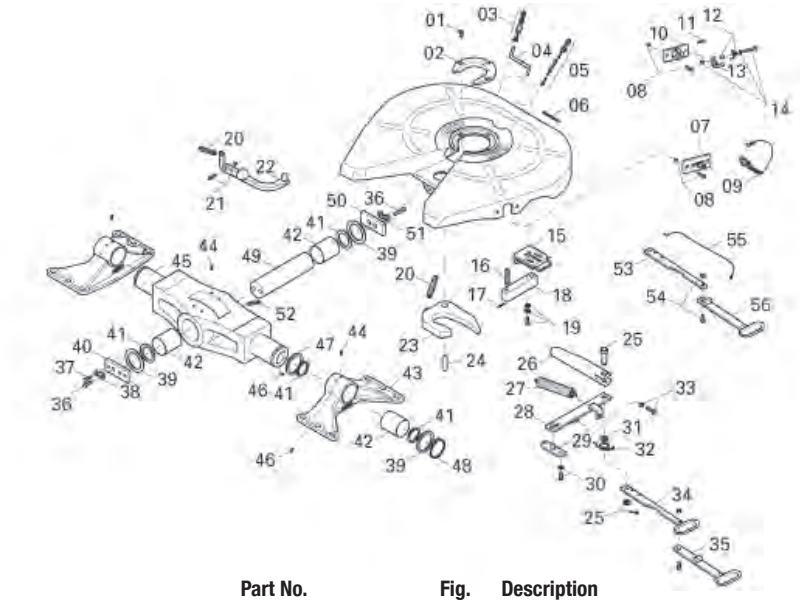

Fig.	Description	Part No.
01	Socket head cap screw	SK242108
02	Wearing ring 3½" compl. with item 1	SK242156
02	Wearing ring 2" compl. with item 1	SK242157
03	Grease nipple compl.	SK1976
04	Grease tube	SK1989
05	Schmierleitung, compl. with item 6	SK240802
06	Tubing clamp	SK312113
07	Guide plate up to series 70	SK240522
08	Hexagon head bolt comp.	SK242150
09	Spring hook/chain up to series 70	SK1436V
10	Latch plate compl. with 11 from series 72	SK2405084
11	Split pin	000.003.027
12	Spring compl. with spacer from series 72	SK292130
13	Latch compl. from series 72	SK312152
14	Bolt compl. form series 72	SK352103
15	Cover plate	SK250622
16	Thrust spring	SK250615
17	Clamping sleeve	SK252110
18	Block	SK250635
19	Hexagon bolt	SK252150
20	Lock jaw spring	SK210601
21	Hexagon head bolt compl.	SK242151
22	Pin	SK240527
23	Lock jaw 3½"	SK240514
23	Lock jaw 2"	SK240513
24	Pivot bolt	SK240518
25	Pivot bolt compl.	SK212114
26	Locking bar	SK240501
27	Double tension spring	SK240523
28	Lever	SK240504

Fig.	Description	Part No.
29	Support	SK240515
30	Hexagon head bolt compl.	SK242153
31	Disc	SK240519
32	Spring loop	SK240509
33	Hexagon head bolt compl.	SK242152
34	Operating handle	SK240566
35	Handle	SK2405066
36	Hexagon bolt	SK2034
37	Hexagon bolt	SK252118
38	Security plate	SK250421
39	Distance ring	SK250414
40	Plate	SK250418
41	Seal	SK252107
42	Bush	SK250416
43	Pedestal with 42, 44, 46	SK252152
44	Dowel pin	SK1533
45	Lock lever compl.	SK252151
46	Grease nipple	SK252104
47	Distance plate	SK11921
48	Circlip	SK1435
49	Pivot	SK250417
50	Lock	SK250419
51	Security plate	SK250420
52	Grease nipple	SK252157
53	Extended handle lower part	SK2405067
54	Hexagon bolt	SK242150
55	Latch cord compl.	SK352102
56	Extended handle grip	SK3105113

Repair and Conversion Kits

Fig.	Repair Kits	Part No.
01, 02, 05, 09, 20, 23, 24, 27	Repair kit for locking device 3½"	SK242176
01, 02, 05, 09, 20, 23, 24, 27	Repair kit for locking device 2"	SK242177
35, 54, 55	Handle extension	SK3121063
	Conversion kits	
01, 02, 20,23	Conversion from 3½" pin to 2" pin	SK242198
01, 02, 20,23	Conversion from 2" pin to 3½" pin	SK242199

JSK39CS & JSK39CSW – Rubber Mounting Fifth Wheel coupling with wear steel top plate

Suitable for 3½" king pins. Greaseless option available



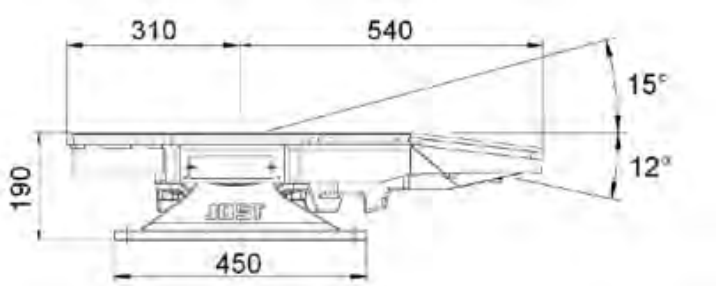

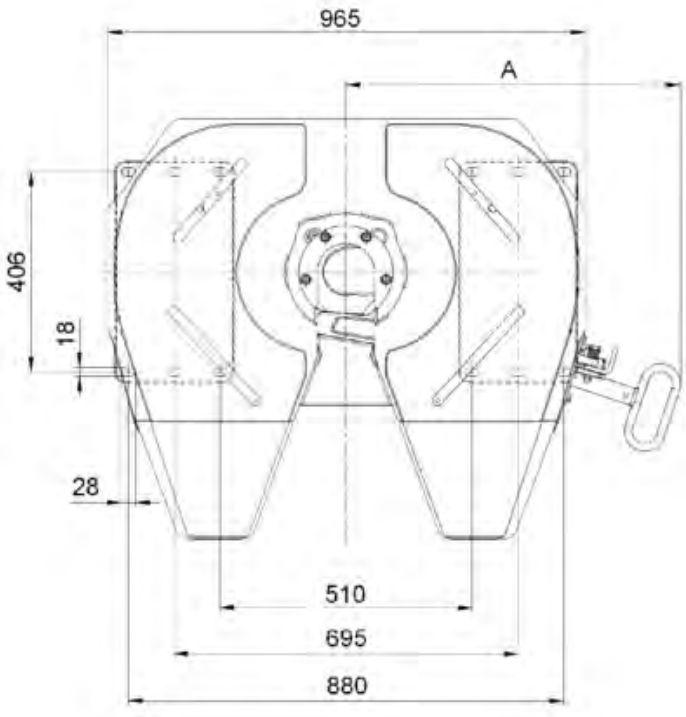

Heavy duty Applications:
Mining
Stock crate
Fridge van
Forestry
Off road

Suitable for 3½" king pins

D-Value	275 kN
Overall height	190 mm
	160 mm
	250 mm
Imposed load	26000 kgs
Weight approx.	232 kgs
Approval Number	CTA-045375

In accordance with the standards:
ISO3842, DIN 74081

Features

A heavy duty fifth wheel coupling for operation under arduous conditions.

Removable wear plates, bolted to the top plate, allowing an easier and cheaper maintenance. Also available in greaseless. Manual adjustment for the locking mechanism to extend the life cycle.

Rubber cushions pad mount. High reliability in the locking mechanism.

Mounting must be carried out in accordance with our instructions.

The right to alter specifications is reserved.

Spare parts for JSK39CS & JSK39CSW

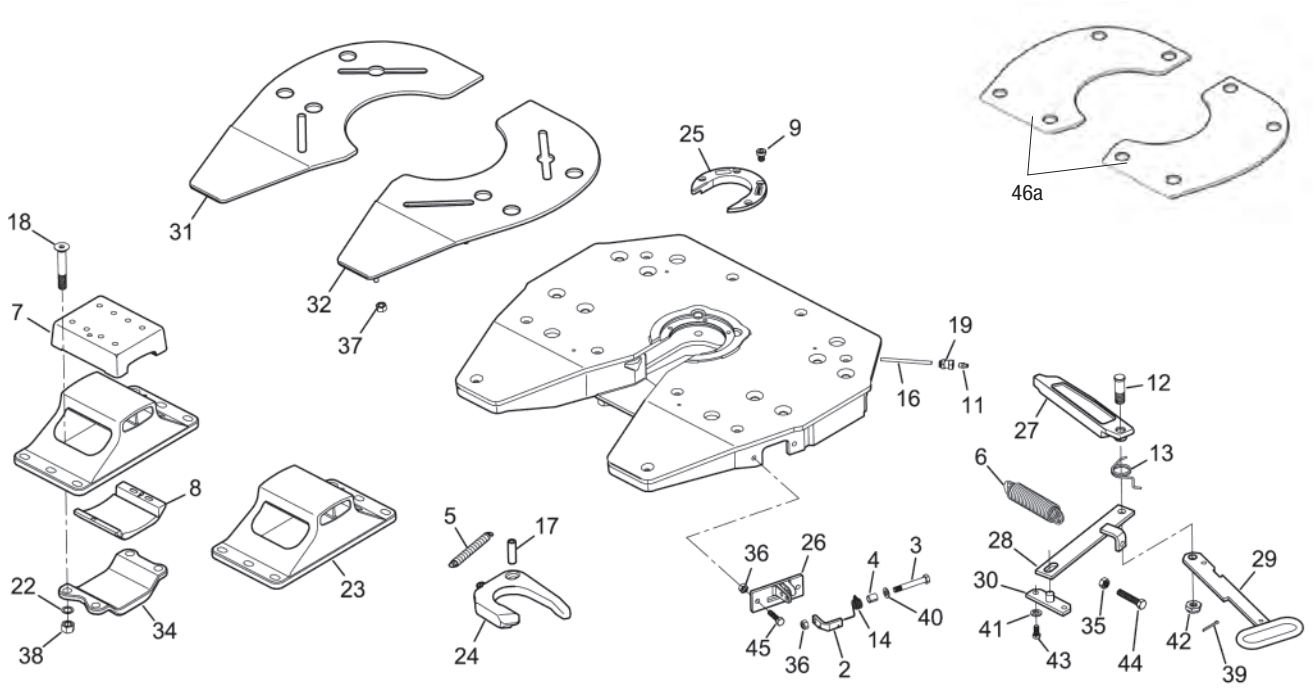

Items	Description	Note	Code
02	Latch		SK312152
03	Latch Bolt	M10 × 1.5 × 70	SK352103
04	Spring and spacer		SK312159
05	Jaw spring		SK210638
06	Spring double		SK240523
07	Upper rubber cushion		SK2006
08	Lower rubber cushion		SK2007
09	Socket head bolt	M12 × 15	SK242108
11	Fitting		AD00896J80
12	PINO Bar		AD01096J80
13	Spring noose		AD01097J00
16	Tube nylon 6mm		AD01105J00
17	Bolt		AD01126J80
18	Screw	M20 × 2 × 125	AD01141B81
19	Input Connector		AD01154J00
22	Safety washer		AD01196J00
23	Pedestal 190mm		SK240401
23b	Pedestal 160mm		SK240405

Items	Description	Note	Code
23c	Pedestal 250mm		SK240404
24	Jaw 3 ½"		SK240514Z
25	Wear Ring		QR00166J01
26	Latch holder		SK2405084
27	Lock Bar		QR00187J01
28	Lever		QR00188J01
29	Handle		QR00190J01
30	Bearing		SK240515
31	Wear plate	Left	QR00195J01
32	Wear plate	right	QR00197J01
34	Bridge		SK2005
37	Hex Nut	M12	ST03006B80
38	Hex Nut	M20	ST03007B81
42	Castellated nut	M20	ST12002J80
43	Hex Bolt, complete	M12 × 25	SK242153
44	Hex Bolt, complete	M14 × 70	SK242152
45	Hex Bolt, complete	M10 × 40	SK242150
46	Replacement insert kit		QR00248J00
46a	Replacement greaseless insert kit		SK3106039CS

Repair Kits

Items	Repair Kits	Code
09, 05, 06, 17, 24, 25	Repair kit for lock 3.5"	QR00245J00
07, 08, 18, 22, 38	Repair kit for bearing	SK242180
02, 03, 04	Repair kit for spring latch	SK312152 KIT
25, 09	Wear Ring, compl. with 09	QR00244J00

LP39CS & 39CSW
Low Profile Stabilised Fifth Wheel Assembly

Suitable for 3½" king pins. Greaseless option available



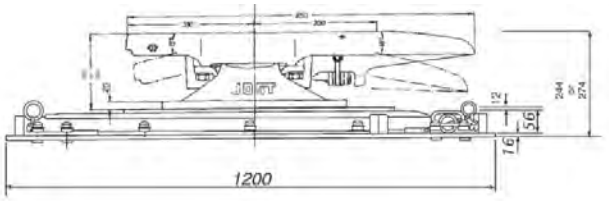

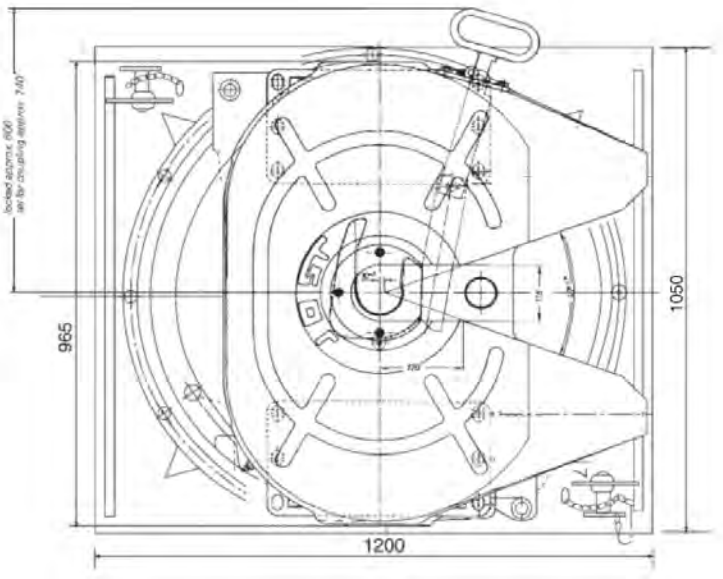

Heavy duty Applications: **Stock crate**
Fridge van
General freight
Tankers

Standard with	16 mm base plate
optional:	20 mm base plate
	LP39C 20mm

*Note thicker base plate determines extra weight and height.

D-Value	
JSK39CS, CSW	240 kN
Imposed load	24000 kgs
Weight approx.	425 kgs
(for 16mm base plate)	
Approval Number	JSK39CS / CSW
	CTA-045375
	LP Subassembly
	CTA-047151

Twin lockouts.

Flush bolt heads on mounting plate in chassis mounting zone. Cast type unit equipped with JSK39 CS fifth wheel extra heavy duty unit. Mounting must be carried out in accordance with our instructions.

Spare parts for LP39CS & LP39CS

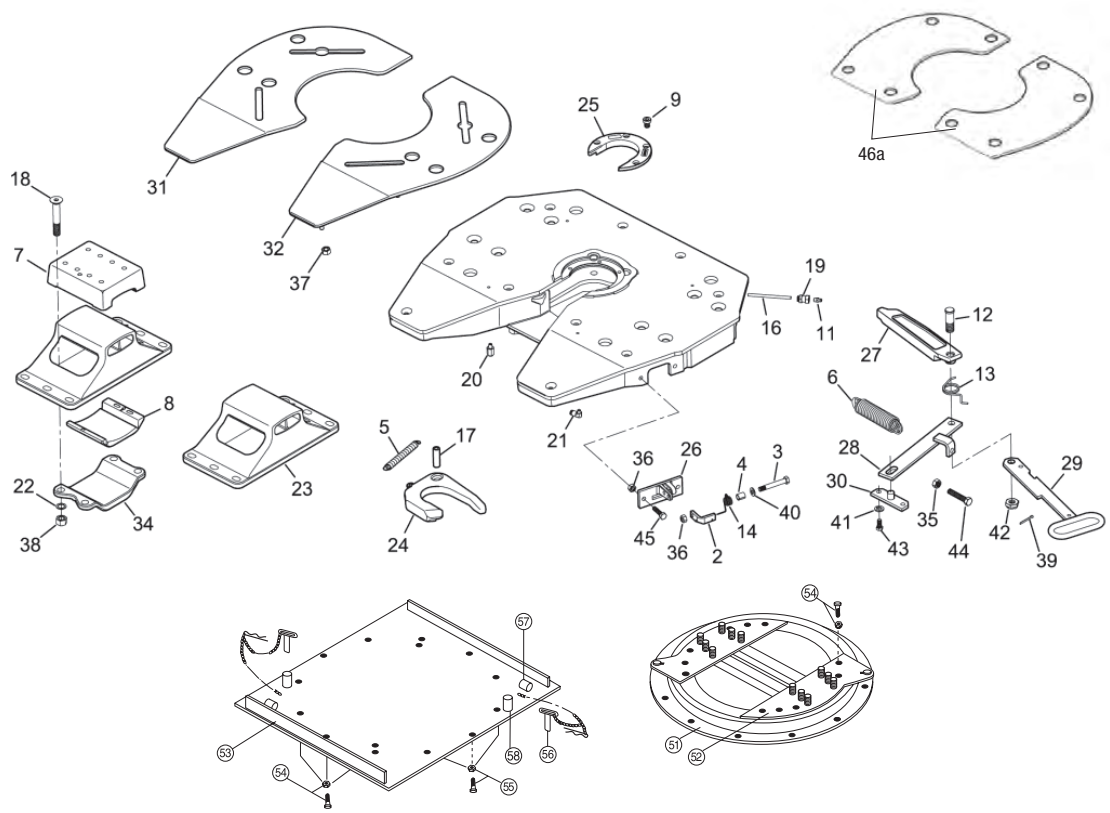

Items	Description	Note	Code
02	Latch		SK312152
03	Latch Bolt	M10 × 1.5 × 70	SK352103
04	Spring and spacer		SK312159
05	Jaw spring		SK210638
06	Spring double		SK240523
07	Upper rubber cushion		SK2006
08	Lower rubber cushion		SK2007
09	Socket head bolt	M12 × 15	SK242108
11	Fitting		AD00896J80
12	PINO Bar		AD01096J80
13	Spring noose		AD01097J00
16	Tube nylon 6mm		AD01105J00
17	Pivot		AD01126J80
18	Screw	M20 × 2 × 125	AD01141B81
19	Input Connector		AD01154J00
22	Safety washer		AD01196J00
23	Pedestal 190mm		SK240401
23b	Pedestal 160mm		SK240405
23c	Pedestal 250mm		SK240404
24	Jaw 3½"		SK240514Z
24	Jaw 3½" (greaseable)		SK240514
25	Wear Ring		QR00166J01
26	Latch holder		SK2405084
27	Lock Bar		QR00187J01
28	Lever		QR00188J01

Items	Description	Note	Code
29	Handle		QR00190J01
30	Bearing		SK240515
31	Wear plate	Left	QR00195J01
32	Wear plate	right	QR00197J01
34	Bridge		SK2005
37	Hex Nut	M12	ST03006B80
38	Hex Nut	M20	ST03007B81
42	Castellated nut	M20	ST12002J80
43	Hex Bolt, complete	M12 × 25	SK242153
44	Hex Bolt, complete	M14 × 70	SK242152
45	Hex Bolt, complete	M10 × 40	SK242150
46	Replacement insert kit		QR00248J00
46a	Replacement greaseless insert kit		SK3106039CS
51	Ball bearing		KDL9006W
52	Half moon compl.		SK370629
53	Base plate (16mm) incl. 34, 36		SK370616
53a	Base plate (20mm) incl. 34, 36		SK370620
54	Hex. bolt compl.		SK372104
55	Countersunk bolt compl.		SK372105
56	Lock out pin, old style		SK370610
56a	Lock out pin, new style		SK370609
57	Tube park		SK370604
58	Tube lock out, old style		SK370605
58a	Tube lock out, new style		SK370504

Repair Kits

Items	Repair Kits	Code
05, 06, 09, 17, 24, 25	Repair kit for lock 3.5"	QR00245J00
07, 08, 18, 22, 38	Repair kit for bearing	SK242180
02, 03, 04	Repair kit for spring latch	SK312152 KIT
09, 25	Wearing Ring, compl. with 09	QR00244J00

DR39CS and DR39CSW
Double Row Stabilised Fifth Wheel Assembly

Suitable for 3½" king pins. Greaseless option available



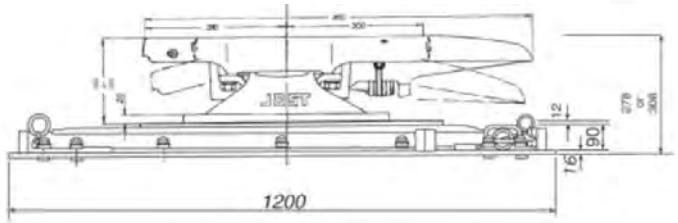

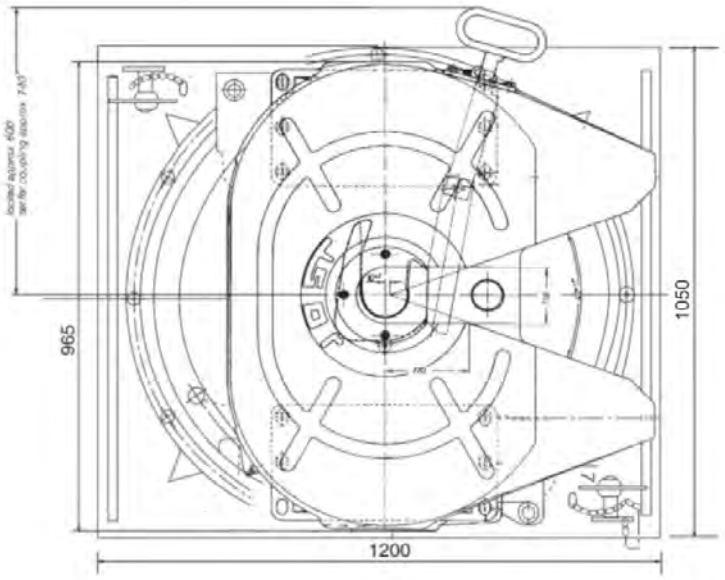

Heavy duty Applications: **Stock crate**
Fridge van
General freight
Tankers

Standard with	16 mm base plate
optional:	20 mm base plate
	DR39C 20mm

*Note thicker base plate determines extra weight and height.

D-Value	
JSK39 CS & CSW	275 kN
Imposed load	26000 kgs
Weight approx.	485 kgs
(for 16mm base plate)	
Approval Number	JSK39CS / CSW
	CTA-045375
	DR Subassembly
	CTA-060153

Twin lockouts.

Flush bolt heads on mounting plate in chassis mounting zone. Cast type unit equipped with JSK39 CS fifth wheel extra heavy duty unit. Mounting must be carried out in accordance with our instructions.

Mounting must be carried out in accordance with our instructions.

Spare parts for DR39CS & DR39CSW

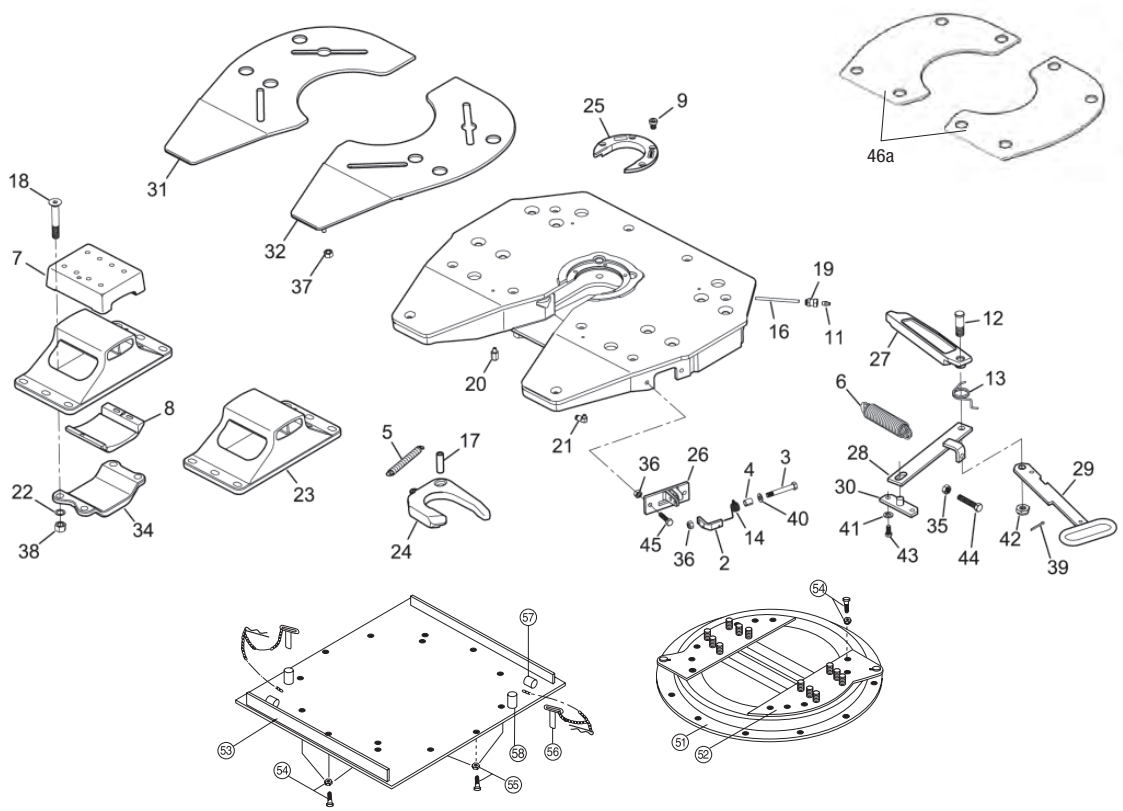

Items	Description	Note	Code
02	Latch		SK312152
03	Latch Bolt	M10 × 1.5 × 70	SK352103
04	Spring and spacer		SK312159
05	Jaw spring		SK210638
06	Spring double		SK240523
07	Upper rubber cushion		SK2006
08	Lower rubber cushion		SK2007
09	Socket head bolt	M12 × 15	SK242108
11	Fitting		AD00896J80
12	PINO Bar		AD01096J80
13	Spring noose		AD01097J00
16	Tube nylon 6mm		AD01105J00
17	Pivot		AD01126J80
18	Screw	M20 × 2 × 125	AD01141B81
19	Input Connector		AD01154J00
22	Safety washer		AD01196J00
23	Pedestal 190mm	190mm	SK240401
23b	Pedestal 160mm		SK240405
23c	Pedestal 250mm		SK240404
24	Jaw 3½"		SK240514Z
24a	Jaw 3½" (greaseable)		SK240514
25	Wear Ring		QR00166J01
26	Latch holder		SK2405084
27	Lock Bar		QR00187J01
28	Lever		QR00188J01

Items	Description	Note	Code
29	Handle		QR00190J01
30	Bearing		SK240515
31	Wear plate	Left	QR00195J01
32	Wear plate	Right	QR00197J01
34	Bridge		SK2005
37	Hex Nut	M12	ST03006B80
38	Hex Nut	M20	ST03007B81
42	Castellated nut	M20	ST12002J80
43	Hex Bolt, complete	M12 × 25	SK242153
44	Hex Bolt, complete	M14 × 70	SK242152
45	Hex Bolt, complete	M10 × 40	SK242150
46	Replacement insert kit		QR00248J00
46a	Replacement greaseless insert kit		SK3106039CS
51	Ball bearing		KLKDR4100010K
52	Half moon compl.		SK370640
53	Base plate (16mm) incl. 34, 36		SK370631
53a	Base plate (20mm) incl. 34, 36		SK370632
54	Hex. bolt compl.		SK372104
55	Countersunk bolt compl.		SK372105
56	Lock out pin, old style		SK370509
56a	Lock out pin, new style		SK370414
57	Tube park		SK370604
58	Tube lock out, old style		SK370510
58a	Tube lock out, new style		SK370515

Repair Kits

Items	Repair Kits	Code
05, 06, 09, 17, 24, 25	Repair kit for lock 3.5"	QR00245J00
07, 08, 18, 22, 38	Repair kit for bearing	SK242180
02, 03, 04	Repair kit for spring latch	SK312152 KIT
09, 25	Wearing Ring, compl. with 09	QR00244J00

Pivot Bearing – JSK50

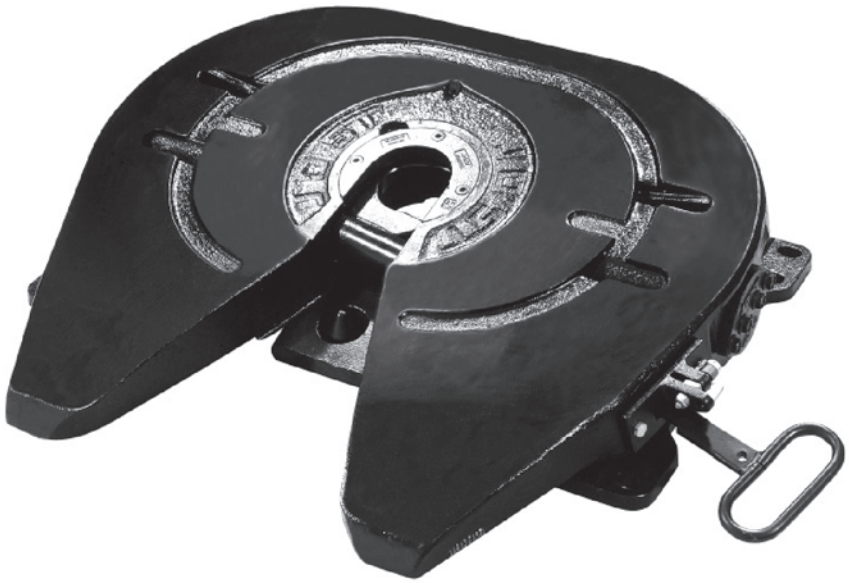

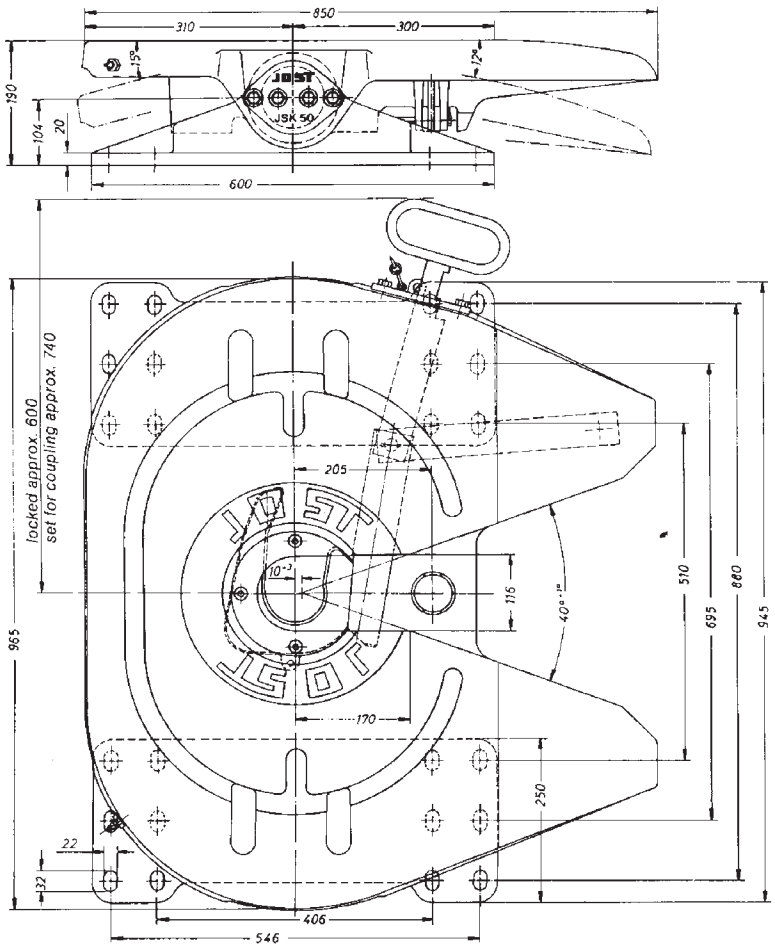

A heavy duty fifth wheel for arduous conditions D rating 300 kN imposed load up, to 50,000 kg.

Suitable for all types of rear axle steering systems.

Weight: 290 Kg.

Bolt on type Pedestals

Approval Number - ECE E1 55R-01 2504

Mounting must be carried out in accordance with our instructions.

Spare parts for Type JSK50

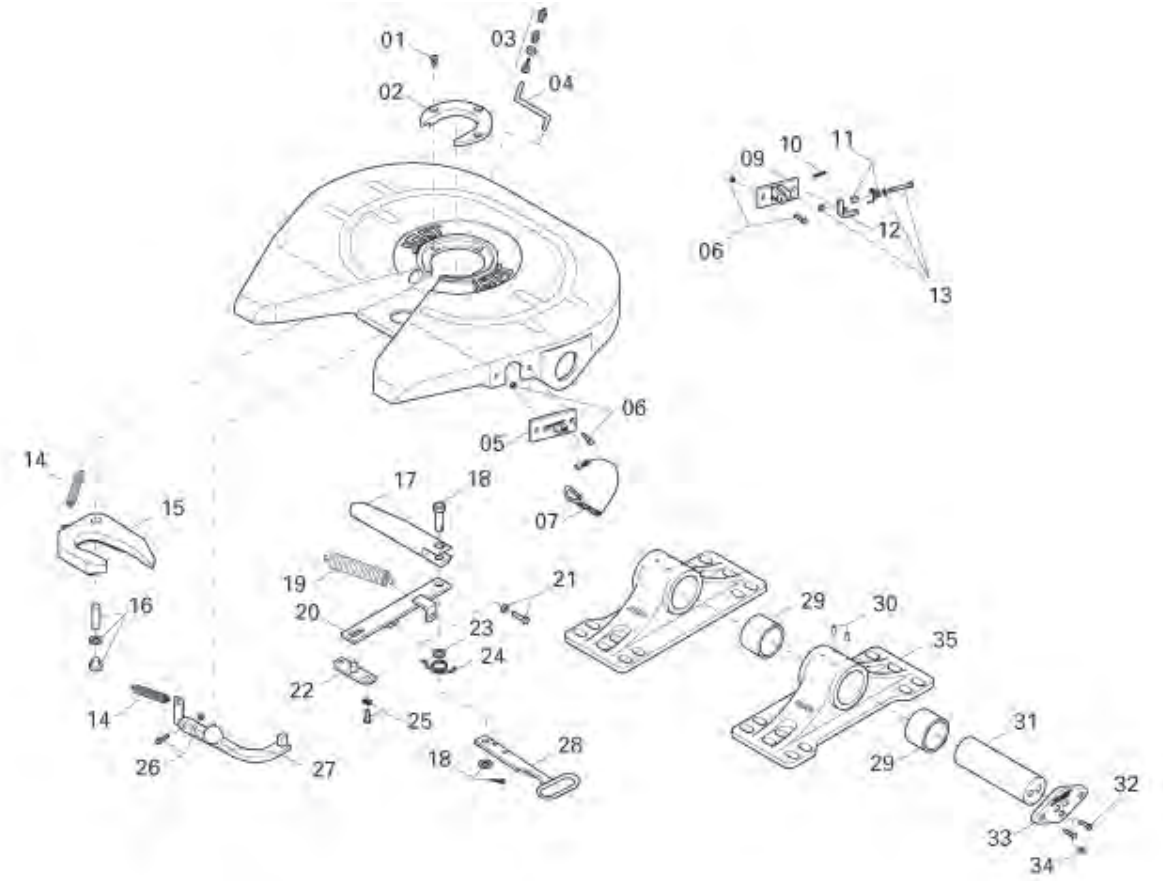

Fig.	Description	Part No.
01	Socket head bolt	SK242108
02	Wearing ring 3½", compl. with 1	SK242156
03	Nut and bolt	SK1976
04	Lubrication tube	SK1989003
05	Guide plate	SK240522
06	Hexagon bolt, complete	SK242150
07	Spring hook, complete	SK1436
09	Latch holder, compl. with 10	SK2405084
10	Clamping pin	000.003.027
11	Spring noose with spacer	SK292130
12	Latch, complete	SK312152
13	Hexagon bolt, complete	SK352103
14	Tension spring	SK210638
15	Lock jaw 3½"	SK240514
15a	Lock jaw 3½" to suit grease nipple	SK240514Z
16	Bolt, complete	SK242154
17	Locking bolt	SK240501
18	Bar bolt, complete	SK212114

Fig.	Description	Part No.
19	Double tension spring	SK240523
20	Lever	SK240504
21	Hexagon bolt, complete	SK242152
22	Bearing	SK240515
23	Washer	SK240519
24	Spring noose	SK240509
25	Hexagon bolt, complete	SK242153
26	Hexagon bolt, complete	SK242151
27	Latch	SK240527
28	Handle	SK2405066
29	Bearing bushing	SK280503
30	Cylindrical notched pin	SK1533
31	Pivot pin	SK280501
32	Locking bolt	SK252105
33	Plate	SK280502
34	Grease nipple	SK252104
35	Pedestal, compl. with 29 + 30	SK282151

Repair and Conversion Kits

Fig.	Repair Kits	Part No.
1, 2, 5, 7, 12, 20, 27, 28	Repair kit for lock 3½"	SK242176
	Conversion Kits	
31, 32, 34	Handle extension retrofit kit, complete	SK282151

JSK52 – Heavy Duty Fifth Wheel Coupling 3½" for extreme applications



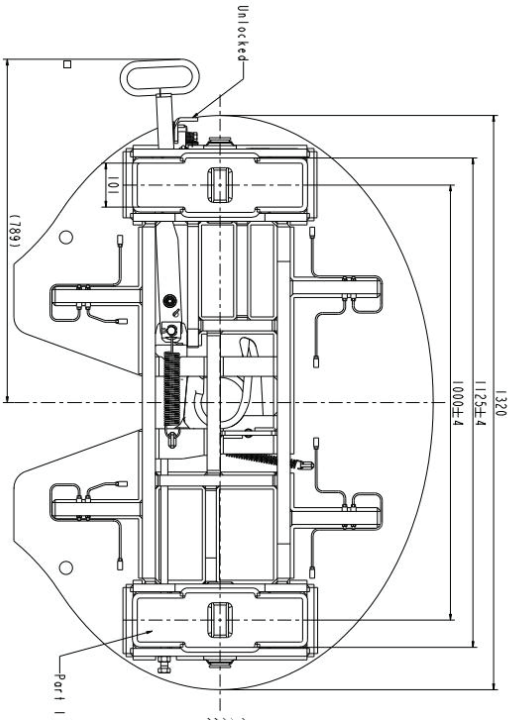

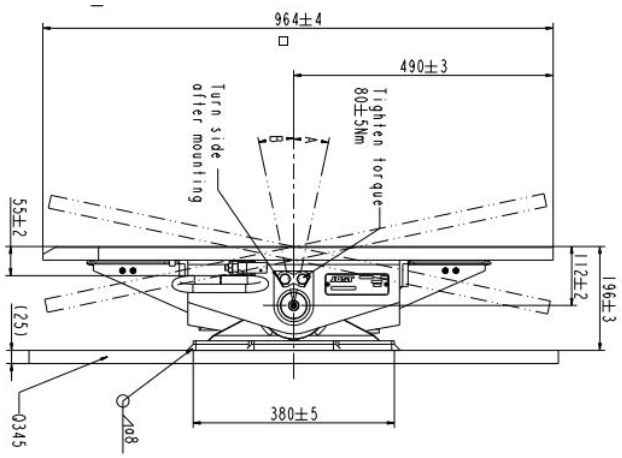

A heavy duty fifth wheel coupling for operation under arduous conditions.

Increased load (up to 75,000kg).

With pivot bearing weld on pedestals.

Technical specification:

Pin and bush

The fifth wheel coupling complies with the directives/ standards as per 94/20/EC – Class S, DIN 74084 and ISO 3842. Suitable for 3.5" (90) king pins as per 94/20/EC, DIN 74083 and ISO 4086. Fitted on a mounting plate.

Imposed weight	75,000 kg
D–value	400 kN
Weight	450 kg
Approval Number	CTA-046422

Spare parts for Type JSK52

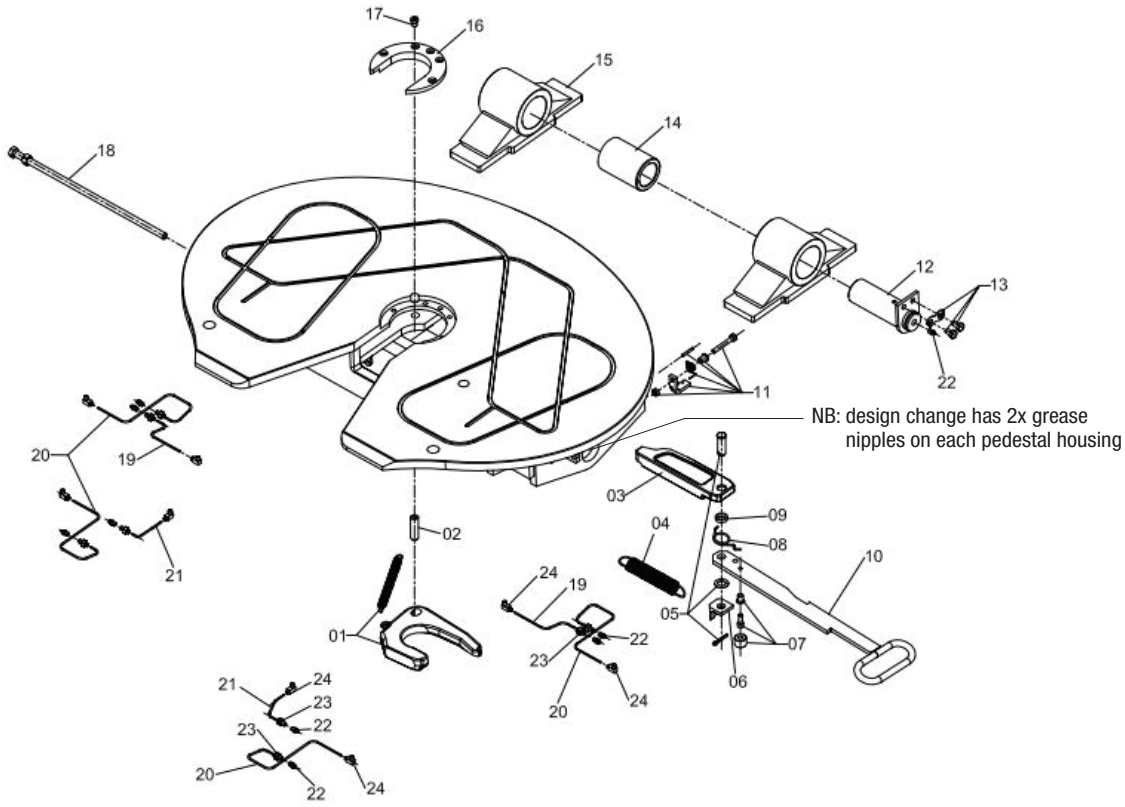

Fig.	Description	Part No.
1	Jaw, complete	SK8301005
2	Lock bolt	SK8301307
3	Locking bar	SK8301209
4	Double tension spring	SK8301210
5	Bar bolt	SK8301006
6	Spring pulling plate	SK8101206
7	Bolt	SK8301007
8	Torsion spring	SK240509
9	Spacer	SK8101305
10	Pull handle	SK8301213
11	Latch mechanism	SK8301008
12	Pivot pin	SK8301205
13	Hex head screw & retaining sheet	000.001.148 & SK3104/046
14	Rubber bushing	SK8301204

Fig.	Description	Part No.
15	Pedestal 196mm	SK8301216
16	Wear ring Socket	SK8301223
17	Head bolt	SK242108
18	Adjusting screw	SK8301301
19	Oil pipe 1	SK8301220
20	Oil pipe 2	SK8301221
21	Oil pipe 3	SK8301222
22	Oil nipple	SK8301308
23	Oil pipe joint	SK8301310
24	90 oil pipe joint	SK8301309

JSK54 – Heavy Duty Fifth Wheel Coupling 4" for extreme applications

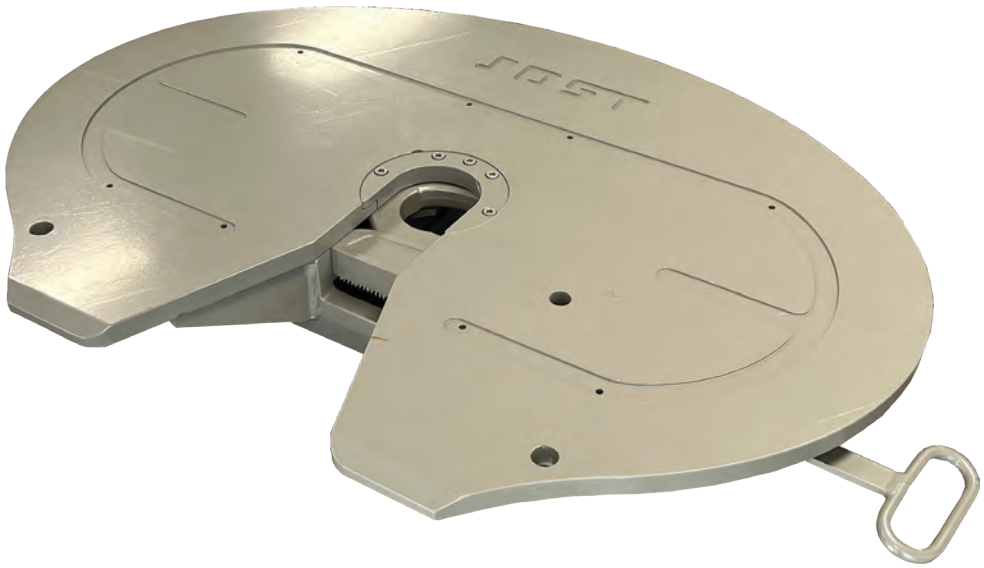

Extreme heavy duty fifth wheel coupling for use in offroad applications.

4'' fifth wheel.

Compatible with 4'' / 100mm king pins.

Imposed load 80t.

GCM rating 385T *combination specific.

Technical specification:

D–value	550 kN
Weight	490 kg

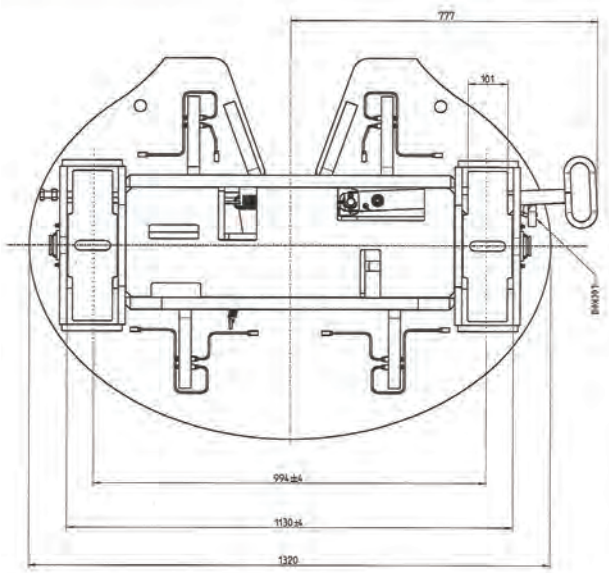

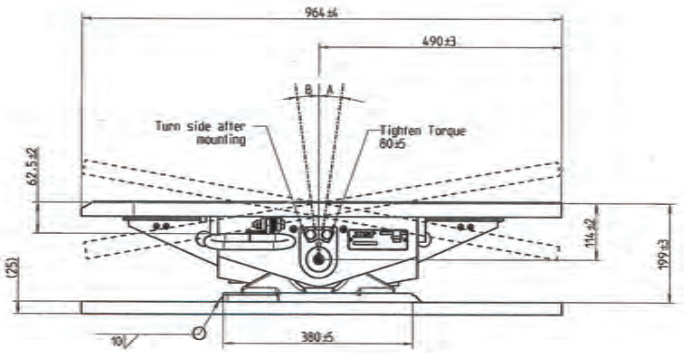

JSK54 Assembled View

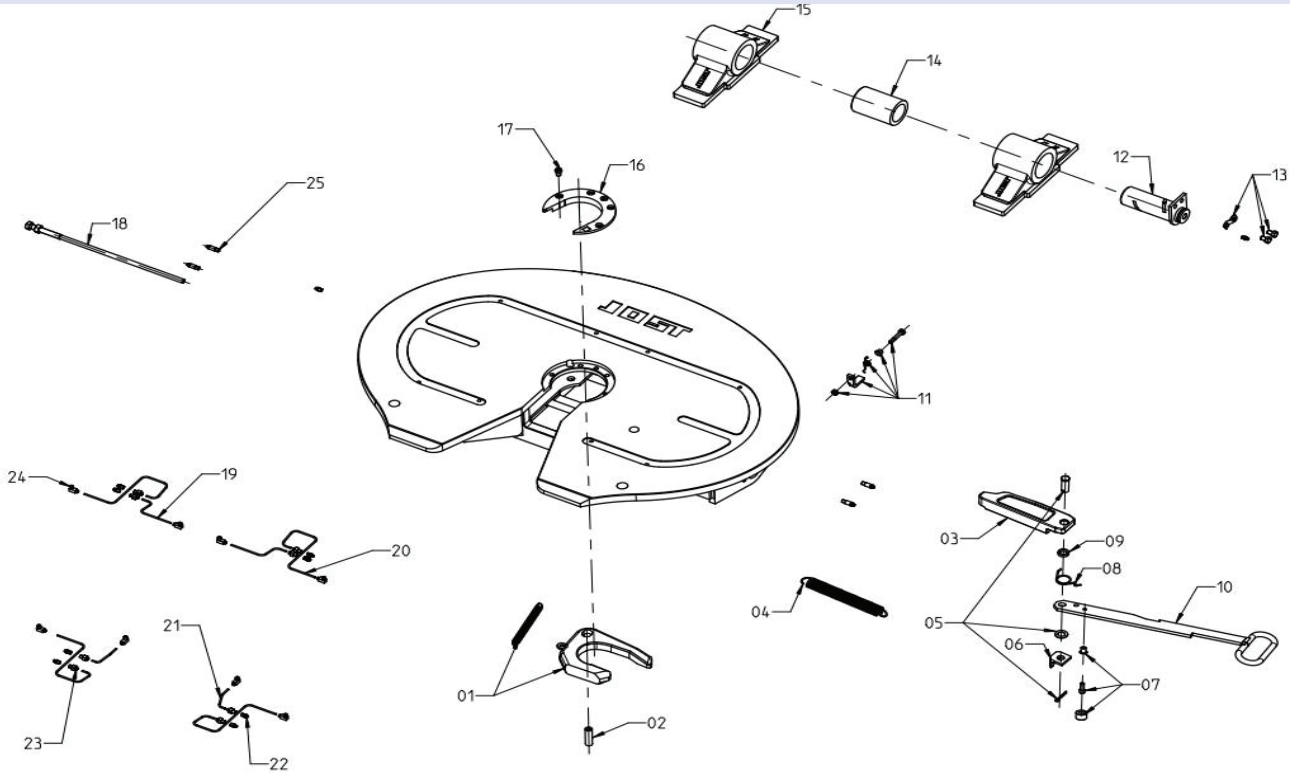

No.	Description	Remark	Order No.	Quantity /set
1	Lock jaw	4" (100)	SK8303-005	1
2	Pivot		SK8303-307	1
3	Lock bar		SK8303-209	1
4	Double tension spring		SK8301-210-01	1
5	Bar bolt		SK8301-006	1
6	Fixing loop		SK8101-206	1
7	Bolt		SK8301-007	1
8	Spring		SK2405-009	1
9	Washer		SK8101-305	1
10	Pull handle		SK8303-213	1
11	Latch mechanism		SK8301-008	1
12	Swivel pin with stop		SK8301-205	2
13	Hexagon head screw + retaining sheet		SK2921-038	2
14	Bushing		SK8301-204	2

No.	Description	Remark	Order No.	Quantity /set
15	Pedestal (196mm)		SK8301-224	2
16	Wearing ring	4" (100)	SK8303-223	1
17	Socket head cap screw		SK2421-008-02	5
18	Adjusting screw with hexagon nut		SK8301-301	1
19	Oil pipe 1		SK8301-220	2
20	Oil pipe 2		SK8301-221	4
21	Oil pipe 3		SK8301-222	2
22	Oil nipple		SK8301-308	10
23	Oil pipe joint		SK8301-310	8
24	90 oil pipe joint		SK8301-309	8
25	Oil nipple-long		SK8301-308-01	4

Mounting Plates
Mounting height 16mm and 20mm

For fifth wheel couplings with mounting pattern according to DIN 74084, for example JSK38C1 and JSK38G1

MP0118

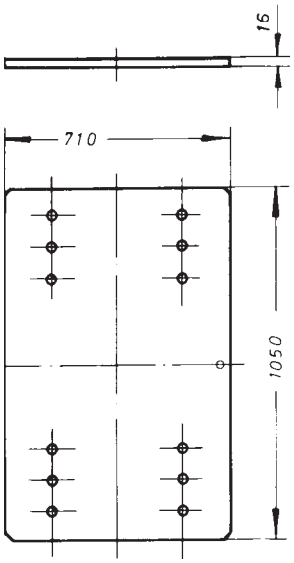

Weight approx. 94kg

Drilling pattern according to
DIN standard 74084 and ISO 3842

MP0118/JSK38

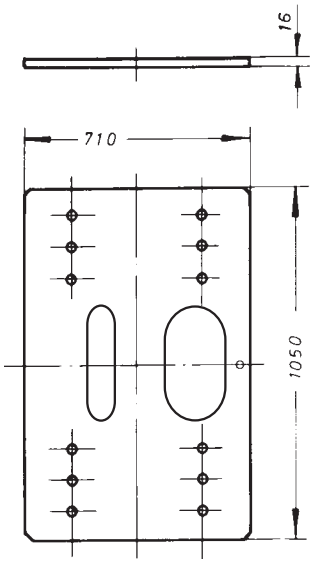

(use for JSK38 with
160mm pedestals)
Weight approx. 90kg

Drilling pattern according to
DIN standard 74084 and ISO 3842

MP0119

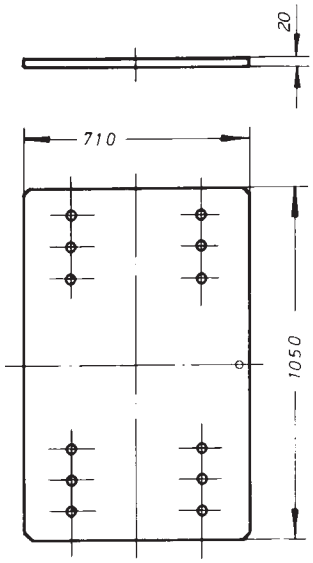

Weight approx. 120kg

Drilling pattern according to
DIN standard 74084 and ISO 3842

The mounting plates are suitable for all types of semi-trailers with rear axle steering systems.

Suitable for fifth wheel couplings up to 290 mm mounting height.

Imposed load	36000 kgs
D-Value	260 kN

For fifth wheel couplings with **JOST** mounting pattern according to **JOST** standard type JSK38C and JSK38G.

The right to alter specifications is reserved.

Mounting example

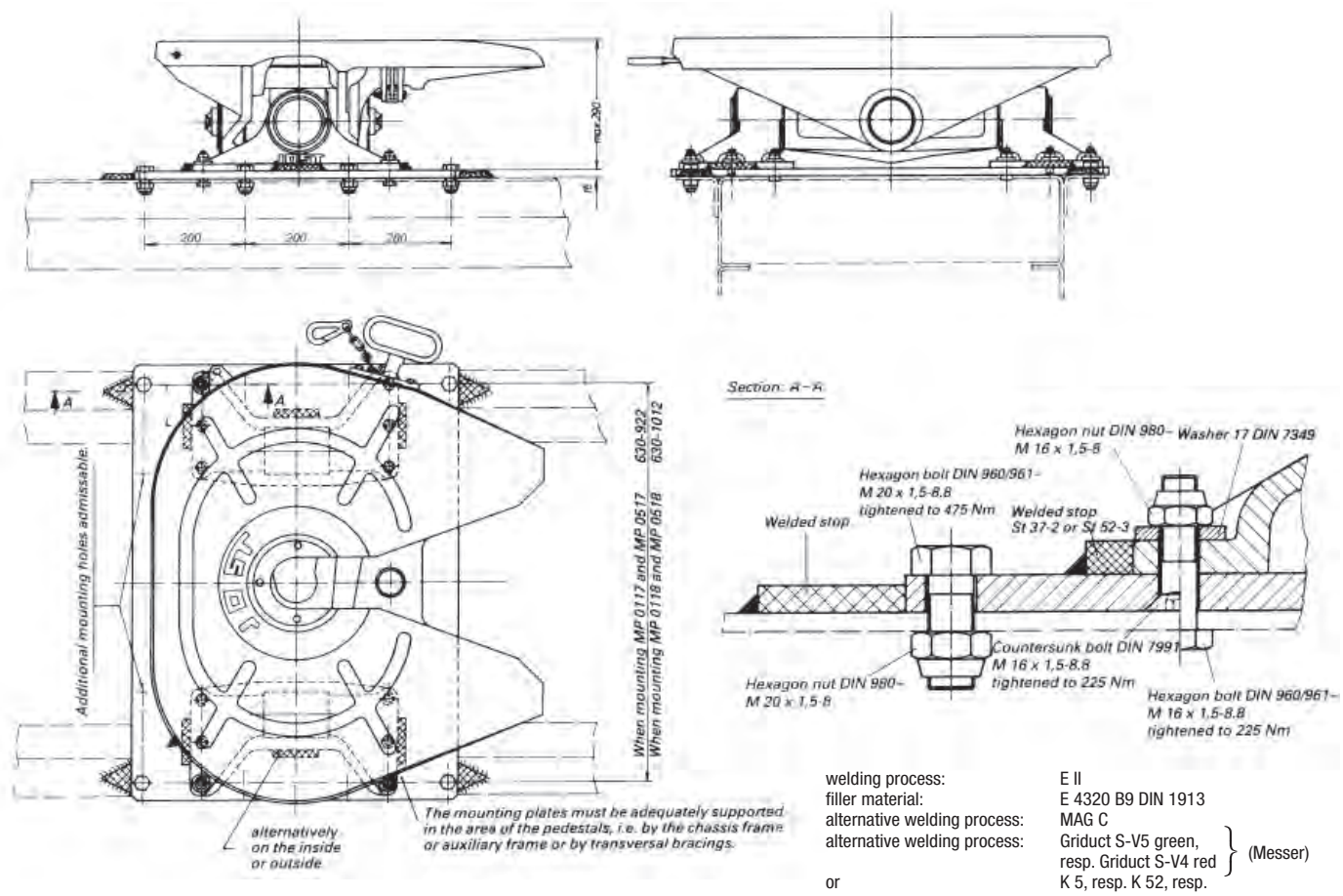

welding process:	E II
filler material:	E 4320 B9 DIN 1913
alternative welding process:	MAG C
alternative welding process:	Griduct S-V5 green, resp. Griduct S-V4 red } (Messer)
or	K 5, resp. K 52, resp. K 56 (Westf. Union)
or	E MK 7, resp. E Mk 6 (Bohler)

Mounting instructions

When mounting the fifth wheel according to DIN 74084 on to a **JOST** mounting plate use 12 bolts M 16, preferably M 16 × 1,5 grade at least 8.8, respectively M 20, preferably M 20 × 1,5 for JSK38C1 and JSK38G1.

To fix the mounting plate on to the vehicle chassis at least 6 bolts M 16 × 1,5, preferably M 16 × 1,5, grade at least 8.8 respectively 4 × 20, preferably M 20 × 1,5 are required on each side.

To ease the shear load on the mounting bolts stop blocks should be welded to both sides of the pedestals and to the front and rear of the mounting plate. The fifth wheel plate must be able to move freely and must touch neither the mounting plate nor the chassis or subframe.

The mounting instructions of the truck manufacturers and—if applicable—existing legal regulations must be adhered to. The bolts must be checked for tightness.

JOST 'Mounting instructions for 2" fifth wheel couplings' must be strictly adhered to. Fit fifth wheel in accordance to AS/NZS 4968.2:2003 "Installation of fifth wheel and turntable assemblies".

Mounting Height 40mm

For fifth wheel couplings with mounting pattern according to DIN 74084, for example JSK38C1 and JSK38G1

MP4126

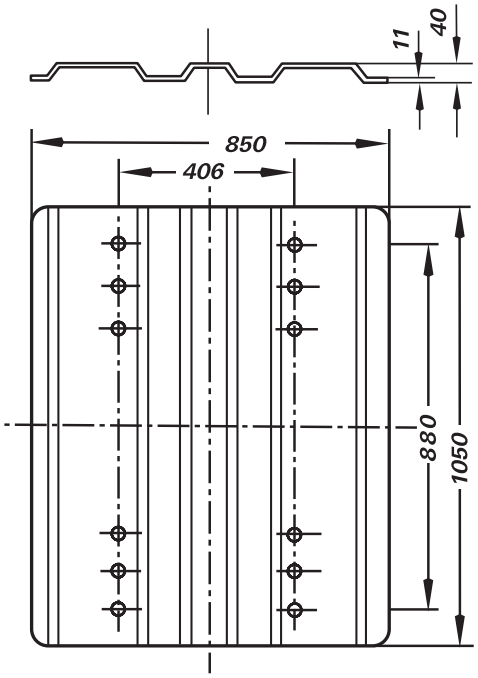

Weight approx. 81kg

Drilling pattern according to
DIN standard 74084 and ISO 3842

The mounting plates are suitable for all types of semi-trailers with rear axle steering systems.

Suitable for fifth wheel couplings up to 290 mm mounting height.

Imposed load	36000 kg
D-value	260 kN

For fifth wheel couplings with **JOST** mounting pattern according to **JOST** standard type JSK38C and JSK38G

Mounting example – MP4126

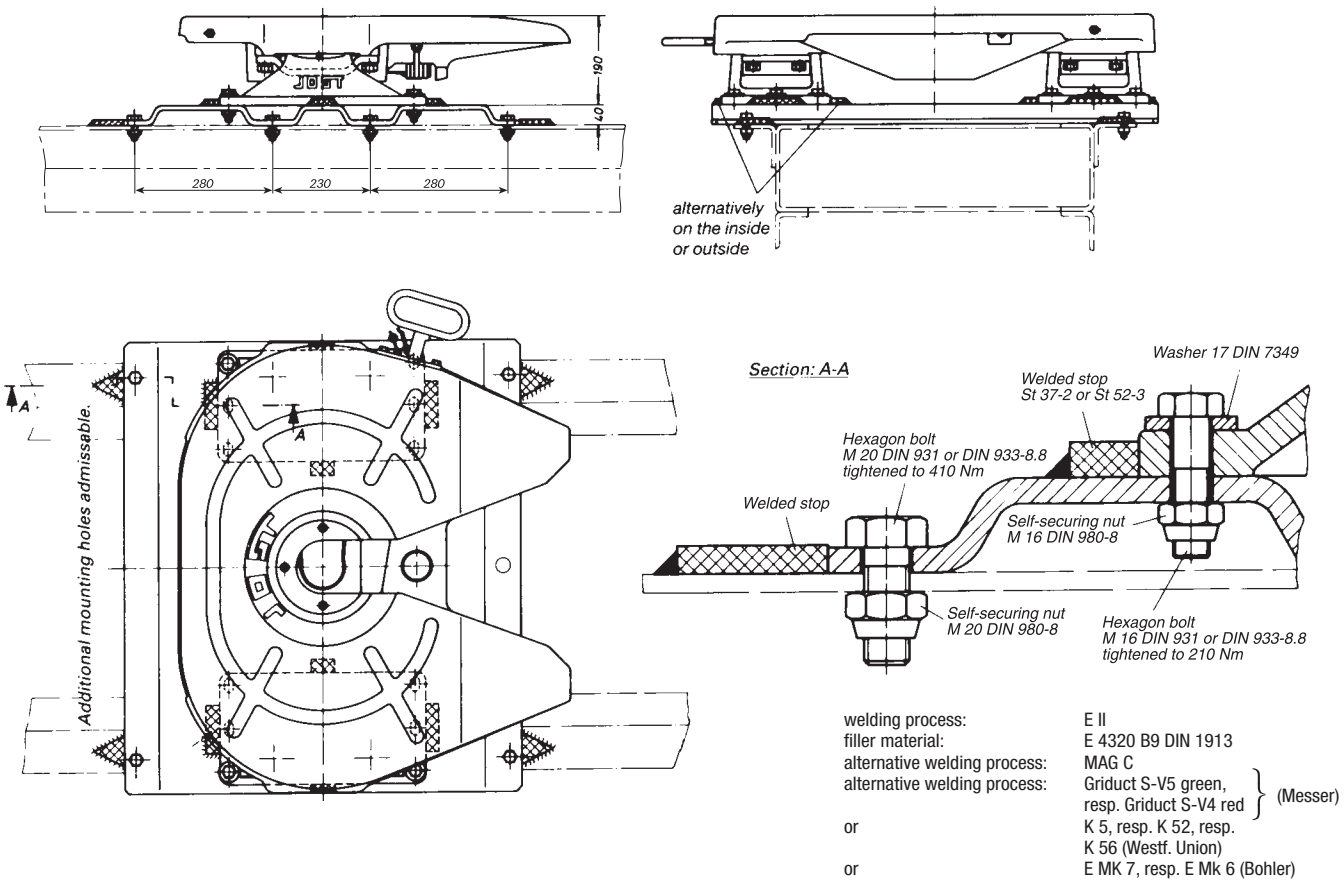

welding process:	E II
filler material:	E 4320 B9 DIN 1913
alternative welding process:	MAG C
alternative welding process:	Griduct S-V5 green, resp. Griduct S-V4 red } (Messer)
or	K 5, resp. K 52, resp. K 56 (Westf. Union)
or	E MK 7, resp. E Mk 6 (Bohler)

Mounting instructions

When mounting the fifth wheel according to DIN standard 74084 onto a **JOST** mounting plate use 12 bolts M 16 preferably M 16 × 1,5 grade at least 8.8 respectively M 20 preferably M 20 × 1,5 for JSK38C and JSK38G.

To fix the mounting plate on to the vehicle chassis at least 6 bolts M 16, preferably M 16 × 1,5, grade at least 8.8 respectively 4 × M 20, preferably M 20 × 1,5 are required on each side.

To ease the shear load on the mounting bolts stop blocks should be welded to both sides of the pedestals and to the front and rear of the mounting plate.

The fifth wheel plate must be able to move freely and must touch neither the mounting plate nor the chassis or subframe.

The mounting instructions of the truck manufacturers and—if applicable—existing legal regulations must be adhered to. The bolts must be checked for tightness.

JOST 'Mounting instructions for 2" fifth wheel couplings" must be strictly adhered to. Fit fifth wheel in accordance to AS/NZS 4968.2:2003 "Installation of fifth wheel and turntable assemblies".

The right to alter specifications is reserved

Mounting Plate Summary for Heavy Duty Fifth Wheel Couplings up to 36000kg Imposed Load

JSK 38C Height Variations – Type MP0118

Imposed load 36000 kg
D-value 260 kN

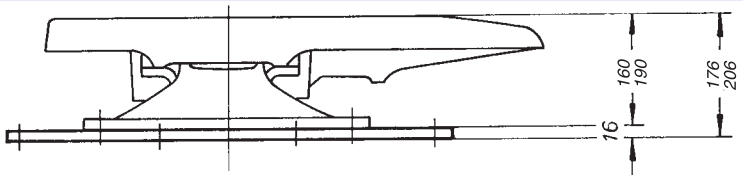

Type MP0119

Imposed load 36000 kg
D-value 260 kN

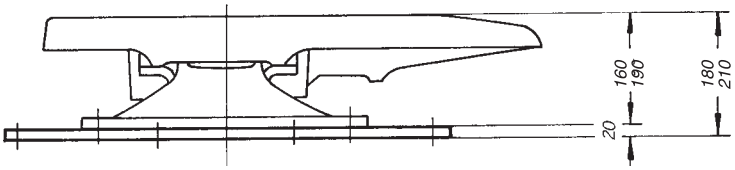

Type MP4126

Imposed load 36000 kg
D-value 260 kN

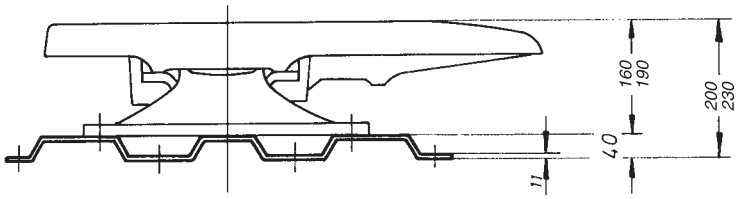

JSK38GI height variations – Type MP0118

Imposed load 36000 kg
D-value 260 kN

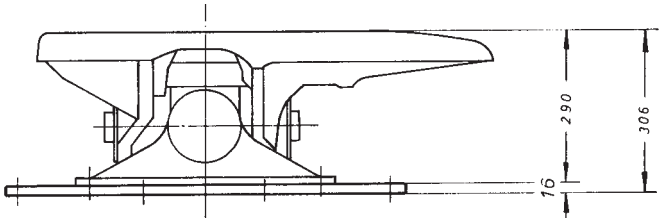

Type MP0119

Imposed load 36000 kg
D-value 260 kN

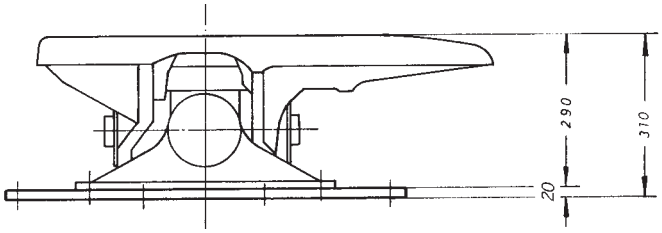

Type MP4126

Imposed load 36000 kg
D-value 260 kN

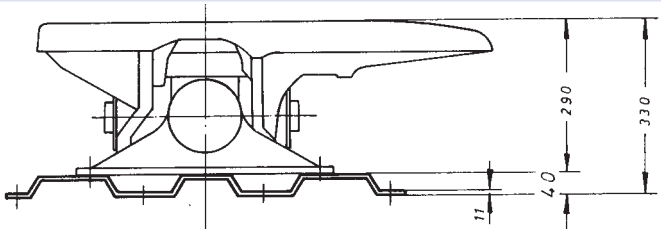

The right to alter specifications is reserved.

Sliders for Fifth Wheel Couplings

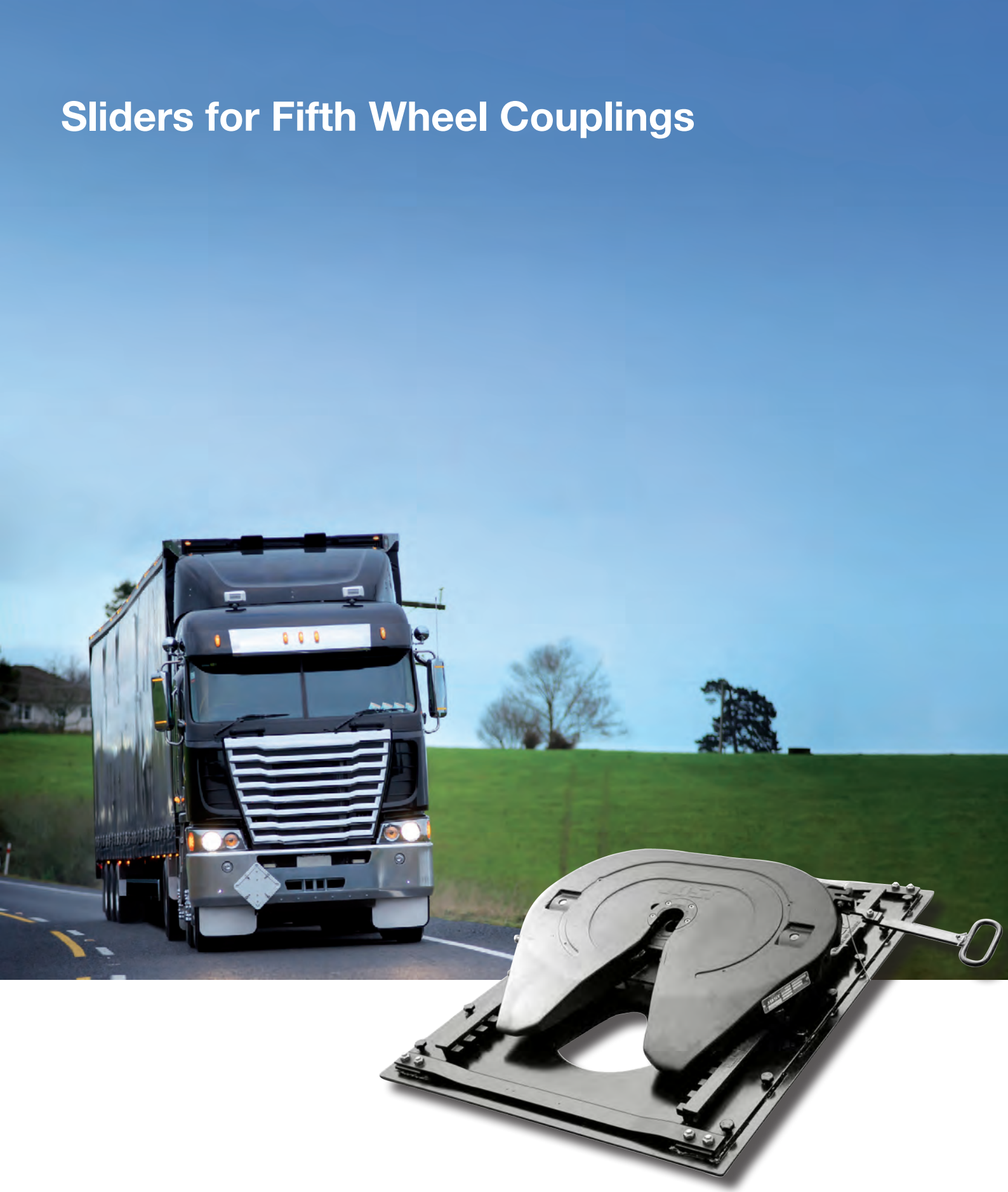

JSKSL Slider Fifthwheel

Standard and XXL



Multi-purpose

- Fifth wheel coupling position freely adjustable in 50mm steps
  - optimum shaft load and load distribution
  - total traction length setting
- Various heights available on request
- Can be attached to all standard vehicle types
- Equipped with the tried and tested fifth wheel couplings JSK37E, JSK37EW

Easy Mounting and operation

- All standard customer hole patterns available ex works
- Easy to mount with a hexagonal bolt
- Base plate to suit European or North American spec chassis

Lightweight, compact and robust

- 25% lighter than its predecessors
- Greater degree of travel with smaller external dimensions
- Cathodic electrophoretic painting for optimum anti corrosion

Top safety standards

- Self-locking mechanism, protected against accidental opening
- Elbow lever principle for greater locking force
- Fourfold, interlocking lock between the carriage and slider frame
- Forged gear tooth rows
- Cast pedestals

JSKSL – Technical Specifications

Standard

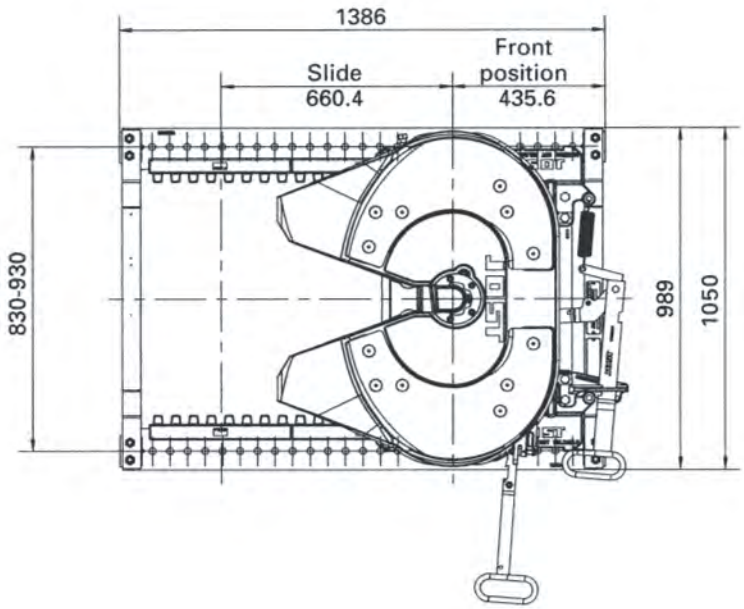

XXL

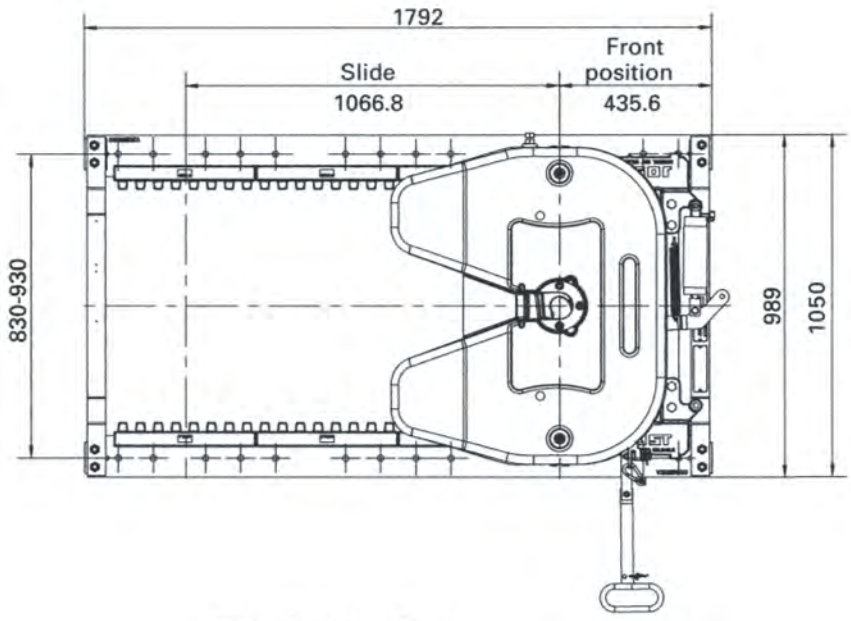

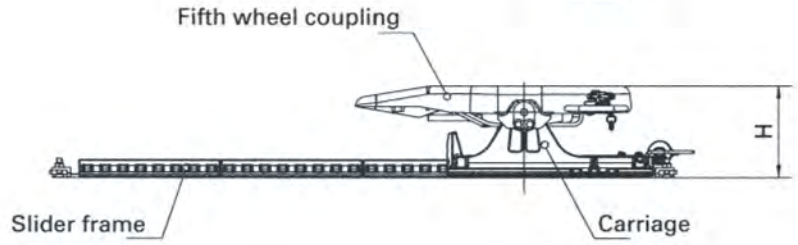

Technical specifications

Version	Mounting height (mm)	Permitted imposed load (t)	D value (kN)	Weight minus fifth wheel coupling (kg)	Approval Number
Standard	173/203/220/263	20t	190kN	approx. 118-248kg	CTA-042707
XXL	173/203/220/263	20t	190kN	approx. 139-303kg	

JSK SL

Spare parts

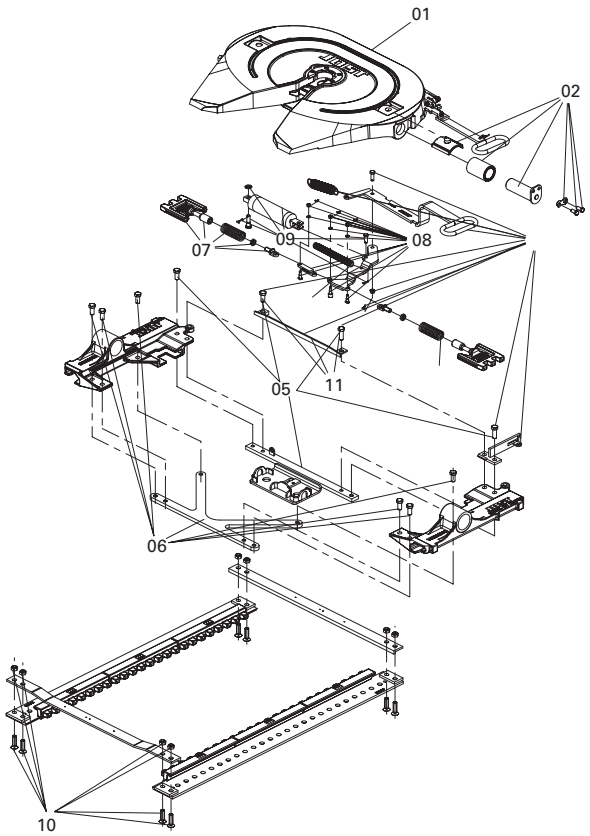

Pos.	Description	Remark	Order No.	pro JSK
01	Fifth wheel coupling	*		1
02	Split pin	**		2
05	Split pin, kit		SLE202210020	1
06	Bracing, kit		SLE202120020	1
07	Stopper, kit		SLE202520020	2
08	Lever, kit		SLE202300020	1
09	Cylinder, kit	for pneumatic version	SLE202410020	1

Pos.	Description	Remark	Order No.	pro JSK
10	Traverse, kit		SLE201380020	2
10	Reinforced Traverse, Kit Scania		SLE201380320	2
11	Bridge, kit	for manual version	SLE202770020	1
11	Bridge, kit	for pneumatic version	SLE203300020	1

*For spare parts for the fifth wheel refer to JSK37E

Spare pedestals are not available

JSK37EVM Manual Slider Assembly

All normal fifth wheel couplings can be mounted on the sliding device. Standard mounting holes for the fifth wheel coupling according to DIN standard 74081 and ISO 3842 are provided.



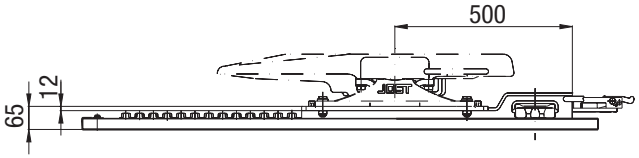

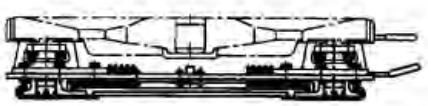

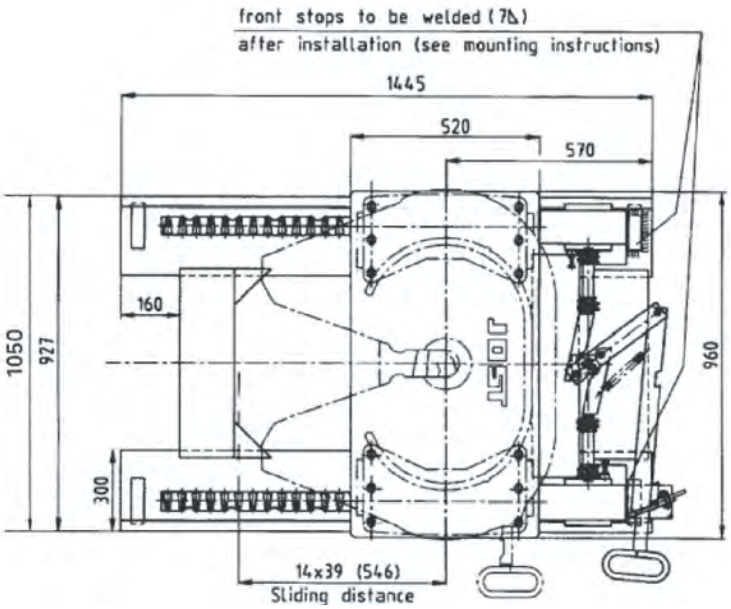

Imposed Load	18,000 kg
Weight approx. (without fifth wheel)	180-440 kg
D-value	190 kN
Approval Number	CTA-026170

For use with JSK37CZ/150

Base plate to suit European or North American spec

The above loads apply to operation on ordinary roads and ordinary operating conditions as they are to be found in Europe. If the fifth wheels are being operated in other territories or under other conditions we would ask you to contact us regarding the type of fifth wheel to be used.

The right to alter specifications is reserved.

Spare Parts for EVM Slider

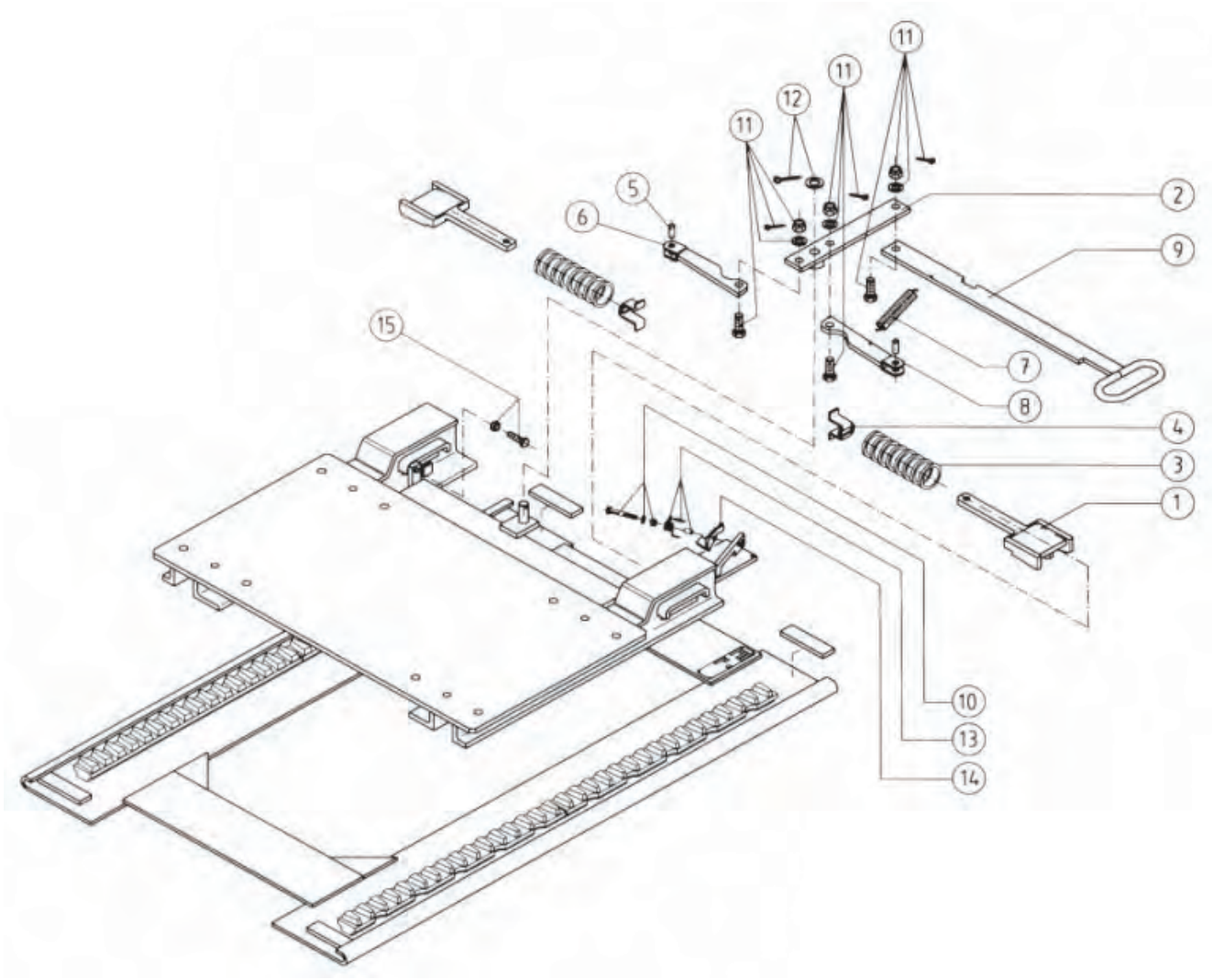

Fig.	Description	Part No.
01	Locking plunger	V100501
02	Handle, compl.	V100535
03	Spring	V100503
04	Spring retainer	V100504
05	Pin	V100505
06	Lever	V100548
07	Tension spring	SK12381
08	Lever	V1005139

Fig.	Description	Part No.
09	Operating handle	V1005183
10	Hexagon screw, compl.	V102149
11	Hexagon screw, compl.	V102109
12	Washer with split pin	V102110
13	Spring spacer, clamping sleeves	V102150
14	Latch, compl.	V1005213
15	Hexagon screw, compl.	V102106
16	Slide Upper Part	V1002020

JSK37EVP Air-operated slider assembly

All normal fifth wheel couplings can be mounted on the sliding device. Standard mounting holes for the fifth wheel coupling according to DIN standard 74081 and ISO 3842 are provided.



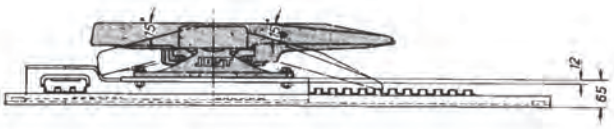

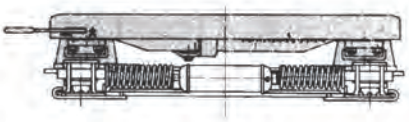

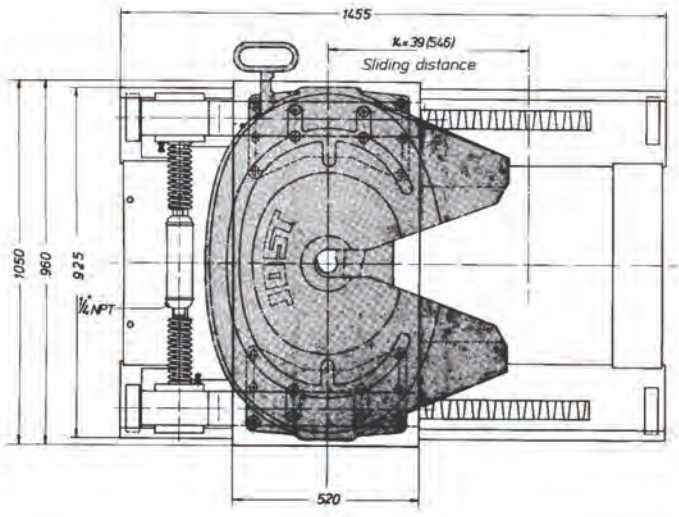

Imposed Load	18,000 kg
Weight approx. (without fifth wheel)	175- 435 kg
D-value	190 kN
Approval Number	CTA-026170

For use with JSK37CZ/150

Base plate to suit European or North American spec

The complete pneumatic actuating device (items 9 to 14 of spare parts list shown overleaf) is supplied.

The above loads apply to operation on ordinary roads and ordinary operating conditions as they are to found in Europe. If the fifth wheels are being operated in other territories or under other conditions we would ask you to contact us regarding the type of fifth wheel to be used.

The right to alter specifications is reserved.

Spare Parts for EVP Slider

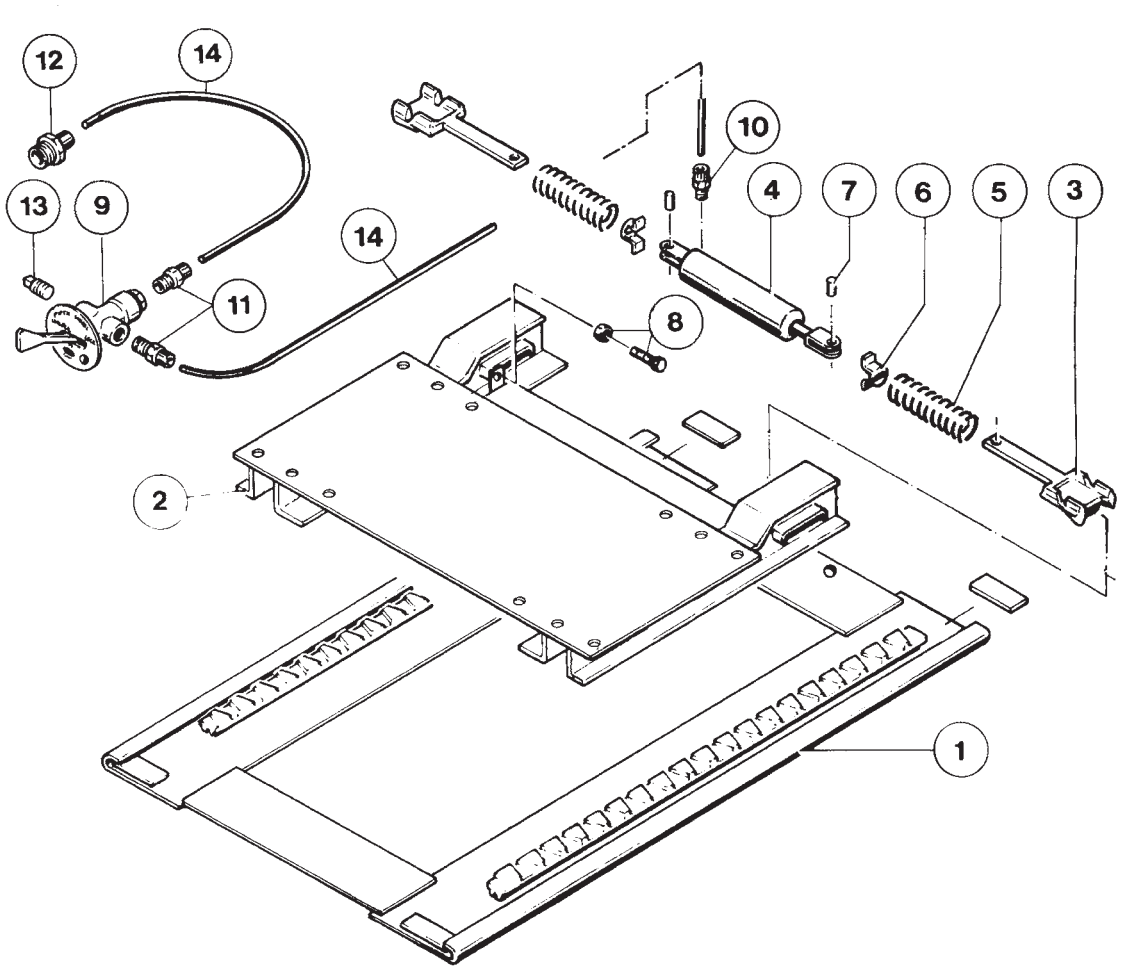

Fig.	Description	Part No.
01	Slider base plate 23"	V1001006
02	Slider upper part	V100206
03	Locking plunger	V100501
04	Air-cylinder	V102151
05	Spring	V100503
06	Spring retainer	V100504
07	Pin	V100505
08	Hexagon screw, compl.	V102106

Fig.	Description	Part No.
09	Air control valve, compl.	V102118
10	Fitting	V102113
11	Fitting	V102114
12	Fitting	V102115
13	Pipe plug	V102117
14	Nylon airline	V102116

DH200 Dual height fifth wheel

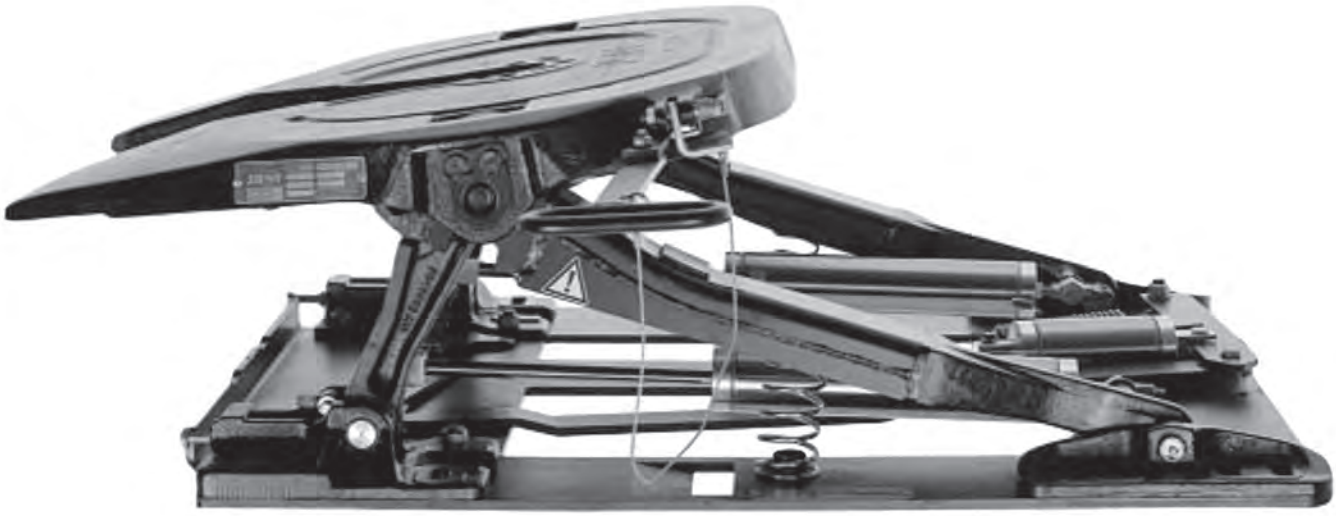

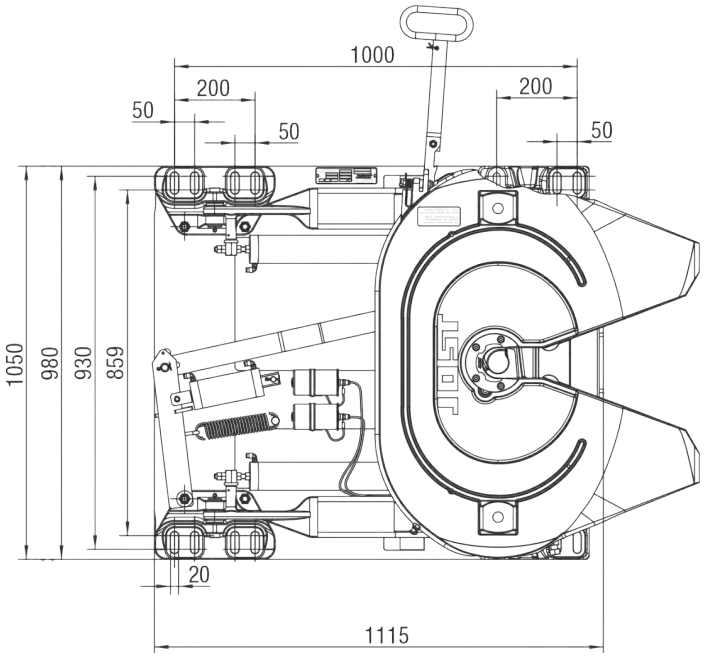

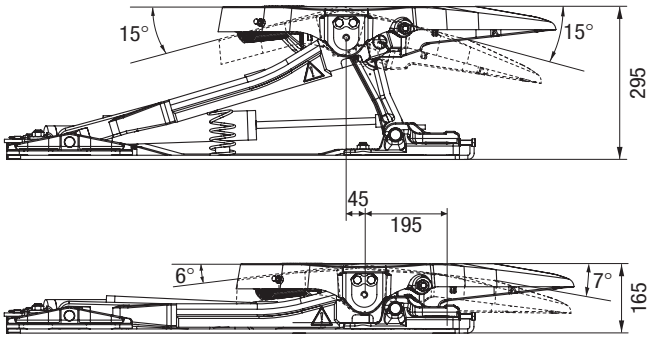

For overheight loads ie. European Containers

Load on main plate	15,000 kg
Weight approx. (with fifth wheel)	260-360 kg
D-value	110 kN
Type approval number	e1 00-1069
Approval Number	ECE E1 55R -01 1069

The above loads apply to operation on ordinary roads and ordinary operating conditions as they are to be found in Europe. If the fifth wheels are being operated in other territories or under other conditions we would ask you to contact us regarding the type of fifth wheel to be used.

The right to alter specifications is reserved.

Spare parts Type DH200 Dual height fifth wheel system

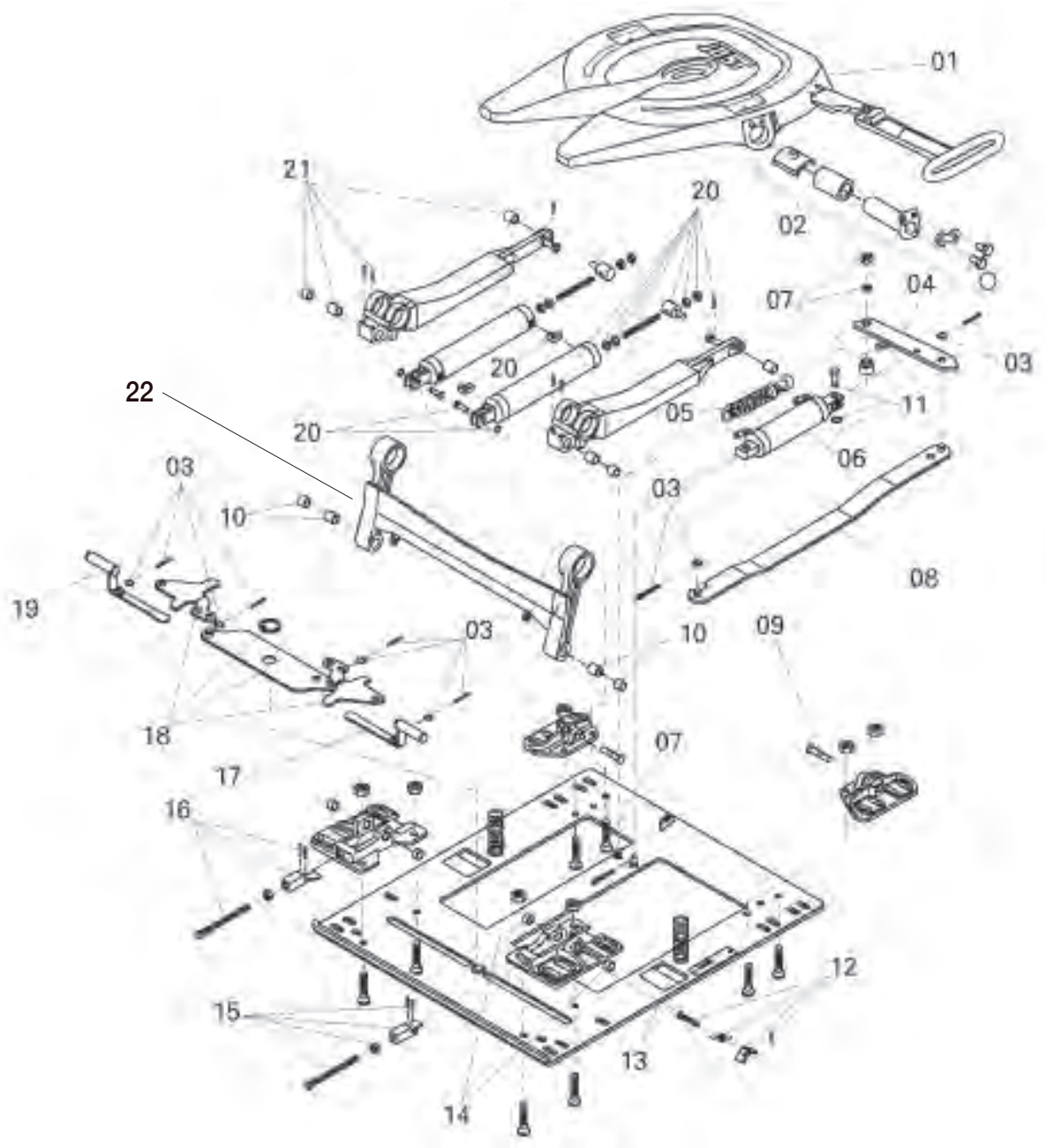

Fig.	Description	Part No.
01	Fifth wheel coupling	JSK 37 E/00128cm
02	Fifth wheel coupling bearing, comp	DH1019902
03	Split pin, complete	DH1019903
04	Lever	DHE1011600
05	Double tension spring	SK240523
06	Closing cylinder	DHE1011100
07	Spacer bushing, complete	DH1019907
08	Lever	DH1019908
09	Pivot pin	DH1019909
10	Bushing set 1	DH1019910
11	Bolt complete	DHE1003100

Fig.	Description	Part No.
12	Latch, complete	DH1019912
13	Spring	DH1019913
14	Bushing set 2	DH1019914
15	Wedge right, complete	DH1019915
16	Wedge left, complete	DH1019916
17	Locking pin, right	DH1019917
18	Elbow lever	DH1019918
19	Locking pin. left	DH1019919
20	Cylinder, complete	DH1019920
21	Bushing set 3	DH1019921
22	Paddle	DHPADDLE

Ballrace Slider – Fifth Wheel System



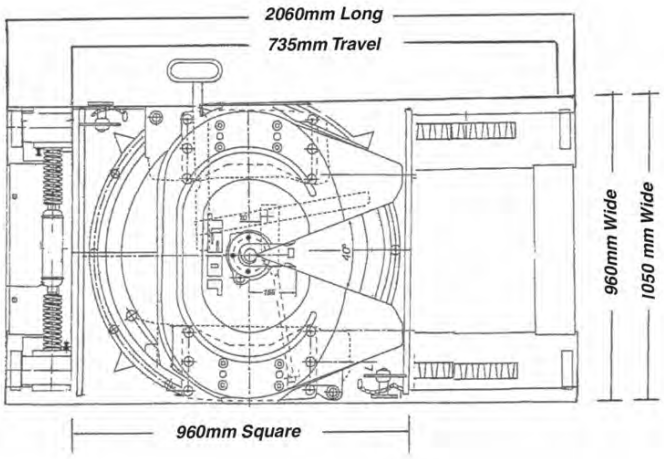

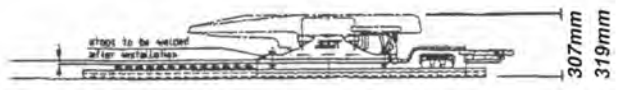

Base Assembly - EVPLP Slider LT

Fifth Wheel - JSK37CZ150

- Over 100 kgs lighter than other available products.
- 735 mm of travel.
- Total overall height including the fifth wheel of 307 or 319 mm.
- Total length of 2060 mm.
- Weight: 435-625 kg approx.
- Pneumatically operated.
- CRN's 24836 and 26170 apply.
- Supplied as standard with the proven tried and tested JSK37CZ Fifth Wheel - "The Industry Standard".
- Manufactured using only genuine **JOST** components.
- Imposed Load of 20,000 kgs.
- Will suit all North American and European chassis widths and A-trailers.

2" and 3½" King Pins





Refer to Jost website www.jostaustralia.com.au for installation and operation instructions.

Technical Circular JOST King Pins – Bolt Torque

Until recently precise torque wrenches were not commonly available in workshops and garages. Because of this **JOST** prescribed onlt torque settings which could not damage the bolts.

The existing torque settings have proven themselves in numerous independent bench tests and in millions of miles of daily use, subject to our installation and maintenance instructions being adhered to.

Nowadays the trailer manufacturers and workshops are using more precise torque wrenches, which are regularly calibrated. This is the prerequisite for a higher torque setting, without the danger of the bolt being damaged. The increase in torque will result in an optimum initial stressing force of the bolt.

The new torque setting will enable the maintenance period to be increased to max. 50,000km resp. six months in line with that of the fifth wheel. The conditions of usage and the instructions of the trailer builders must however be observed.

New JOST Torque Settings:

Part no.	Bolt Size	Torque Nm	King pin type
KZE101203	M14 × 35	190 $^{\pm 10}$	KZ10081012, KZ1410, KZ1412
KZE141603	M16 × 45	280 $^{\pm 15}$	KZ1416, KZ2816
KZE101606	M20 × 50	500 $^{\pm 30}$	KZ1016, KZ1516



King Pins 2" – Access from underneath KZ1008 – KZ1012

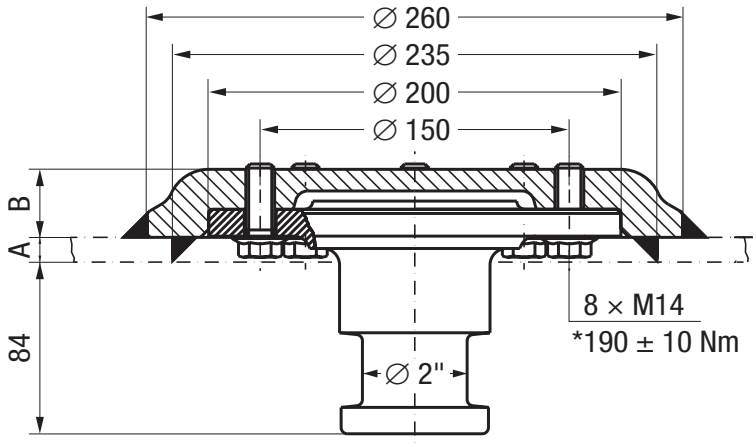

Skid Plate Thickness A	Type	Thickness B	Components Retention	King Pin Plate	Approval Number
8 mm	KZ1008	37 mm	KZ100802		CTA-061543
10 mm	KZ1010	34 mm	KZ101002	KZ101201	CTA-061543
12 mm	KZ1012	33 mm	KZ101202		CTA-061543
16 mm	KZ101216	30 mm	KZ101216		CTA-061543

B. Double & Road Train Rated

Dimensions according to DIN 74080 and ISO 337
JOST king pins can be used in self steering axle systems.

Mounting must be carried out according to the instructions.

Plate Complete

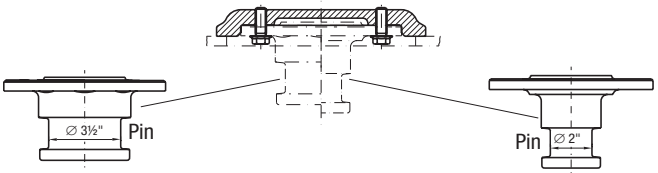

KZ141201 KZ101201

3½" & 2" king pins are easily interchangeable

Spare Parts for KZ1008 – KZ1012

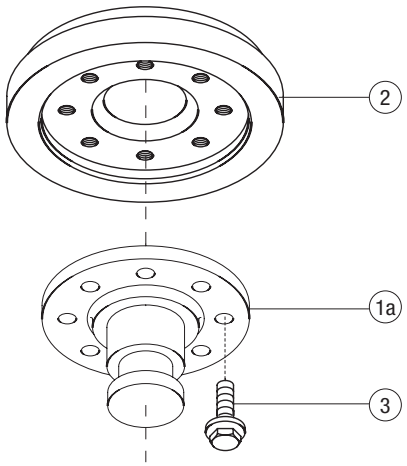

Fig.	Description	Part No.
1a	King pin 2" Dia	KZ101201
2	Retention plate for:	
	16 mm skid plate	KZ101206
	12 mm skid plate	KZ101202
	10 mm skid plate	KZ101002
	8 mm skid plate	KZ100802
3	Self securing bolt	KZE101203

The right to alter specifications is reserved.

King Pin 2" – Access from underneath KZ1516

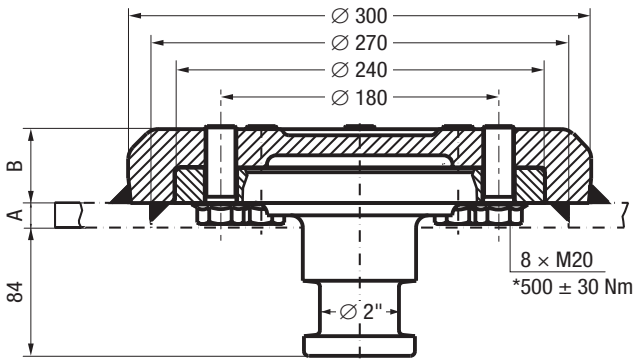

* *Torque*

Selection table / Versions available

Order No. King pins, compl.	D value (kN)	A (mm)	B (mm)	Approval Number
KZ1516	170	16	48	ECE E1 55R-01 0148

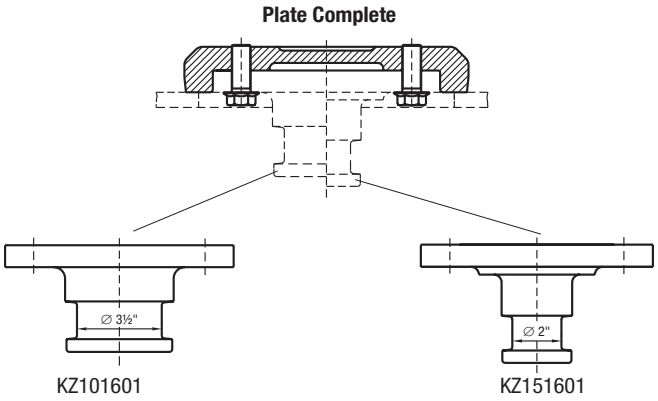

3½" and 2" king pins are easily interchangeable.

Dimensions according to DIN 74080 and ISO 337
JOST king pins can be used in self steering axle systems.

Mounting must be carried out according to our instructions.

Spare Parts for KZ1516

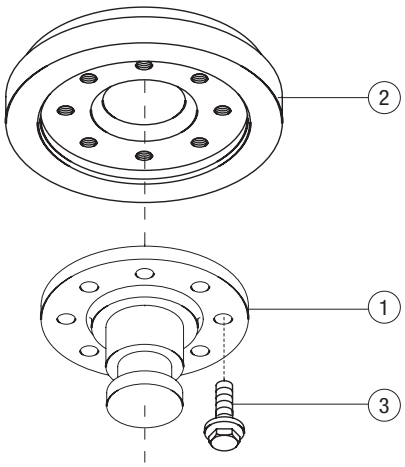

Fig.	Description	Part No.
1	King pin	KZ151601
2	Retention plate	KZ101602
3	Self-securing bolt	KZE101606

The right to alter specifications is reserved.

King Pin 3½" – Access from underneath KZ1016

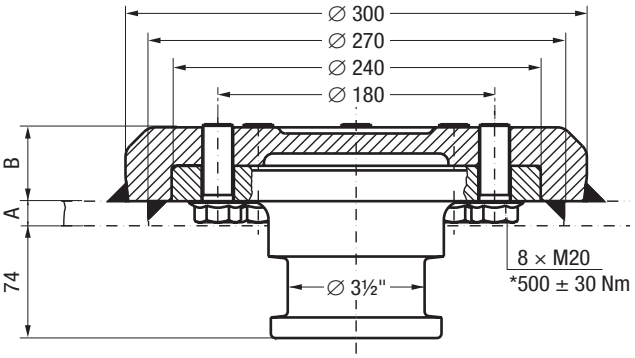

Selection table / Versions available

Order No. King pins, compl.	D value (kN)	A (mm)	B (mm)	Approval Number
KZ1016	320	16	48	ECE E1 55R-01 0150

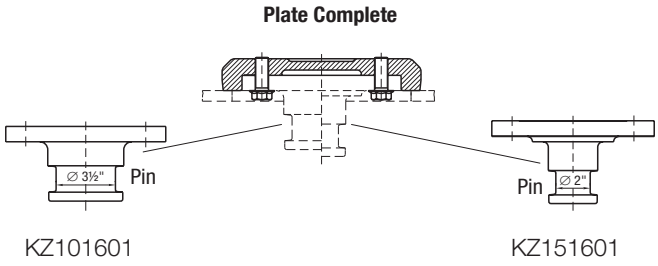

3½" & 2" king pins are easily interchangeable

Dimensions according to DIN 74083 and ISO 4056 **JOST** king pins can be used in self steering axle systems.

Mounting must be carried out according to our instructions.

Spare Parts for KZ1016

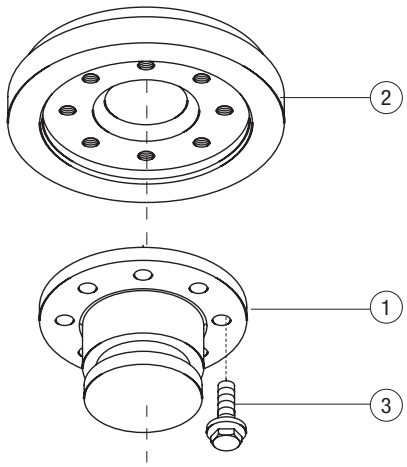

Fig.	Description	Part No.
1	King pin	KZ101601
2	Retention plate	KZ101602
3	Self-securing bolt	KZE101606

The right to alter specifications is reserved.

Heavy Duty King Pin 3½"
KZ5216

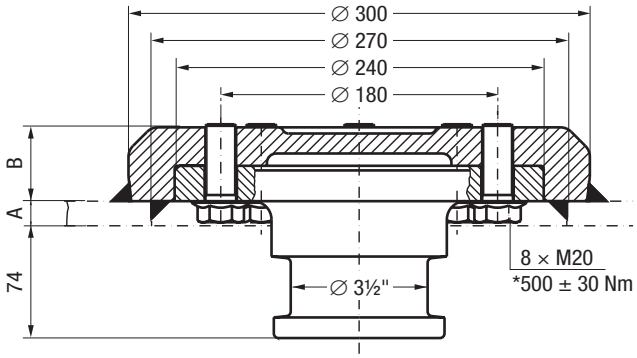

Selection table / Versions available

Order No. King pins, compl.	D value (kN)	A (mm)	B (mm)	Approval Number
KZ5216	400.0	16	48	ECE E1 55R-01 2936

Plate Complete

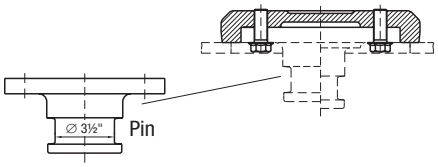

KZ521601

Dimensions according to DIN 74083 and ISO 4056 **JOST** king pins can be used in self steering axle systems.

Mounting must be carried out according to our instructions.

Spare Parts for KZ5216

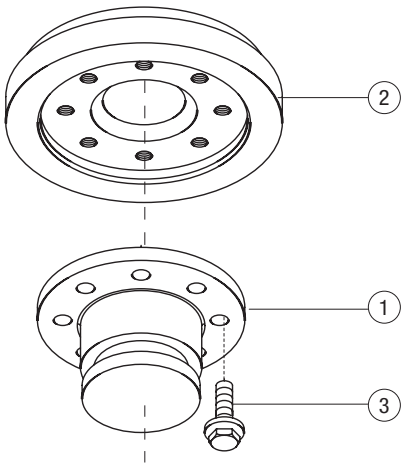

Fig.	Description	Part No.
1	King pin	KZ521601
2	Retention plate	KZ101602
3	Self-securing bolt	KZE101606

The right to alter specifications is reserved.

King Pin 3½" – Access from underneath
KZ1408 – KZ1412

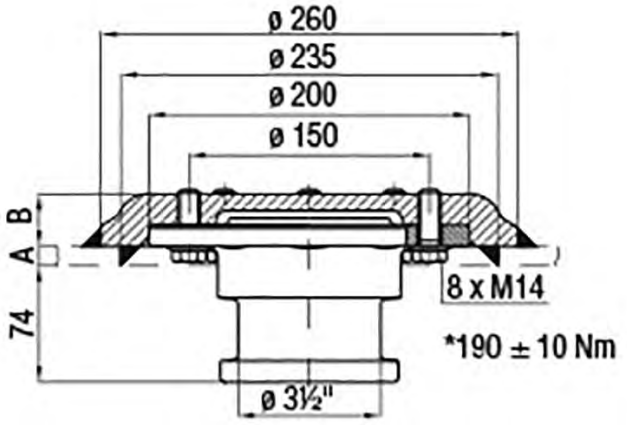

Skid plate thickness A	Components			
	Type	Retention plate	King pin	CRN
8mm	KZ1408	KZ100802	KZ141201	24811
10mm	KZ1410	KZ101002	KZ141201	24811
12mm	KZ1412	KZ101202	KZ141201	24811

Dimensions according to DIN 74083 and ISO 4086 **JOST** king pins can be used in self steering axle systems.

Mounting must be carried out according to our instructions.

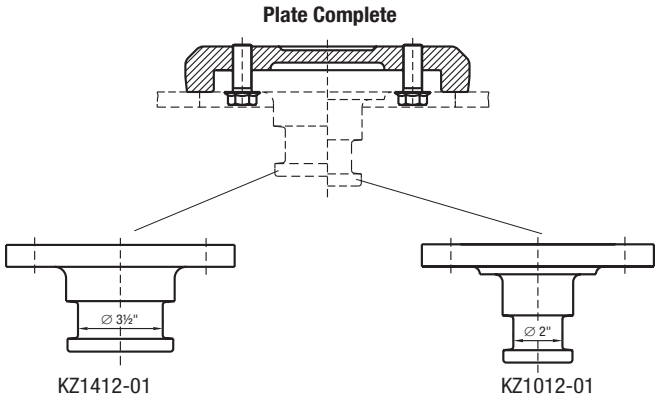

3½" and 2" king pins are easily interchangeable.

Spare Parts for KZ1408, KZ1410, KZ1412

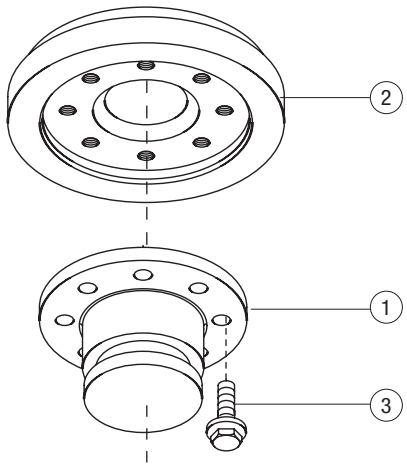

Fig.	Description	Part No.
1	King pin	KZ141201
2	Retention plate for 8 mm skid plate	KZ100802
2	Retention plate for 10 mm skid plate	KZ101002
2	Retention plate for 12 mm skid plate	KZ101202
3	Self-securing bolt	KZE101203

The right to alter specifications is reserved.

King Pin 3½" – Access from underneath KZ1416

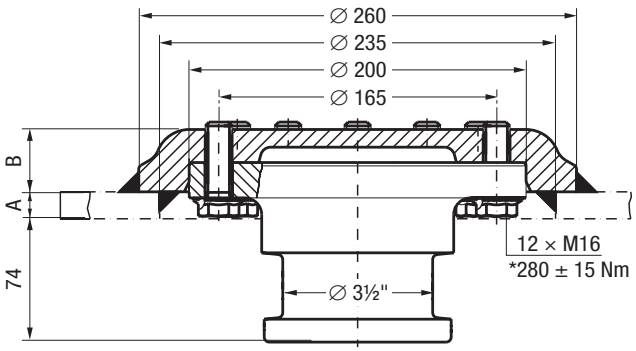

Selection table / Versions available

Order No. King pins, compl.	D value (kN)	A (mm)	B (mm)	Approval Number
KZ1416	200.0	16	37	CTA-024812

Plate Complete

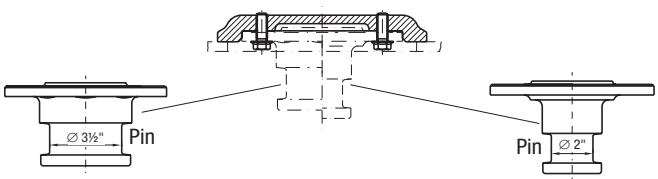

KZ141601 KZ281601

3½" & 2" king pins are easily interchangeable

Dimensions according to DIN 74083 and ISO 4086
JOST king pins can be used in self steering axle systems.

Mounting must be carried out according to our instructions.

Spare Parts for KZ1416

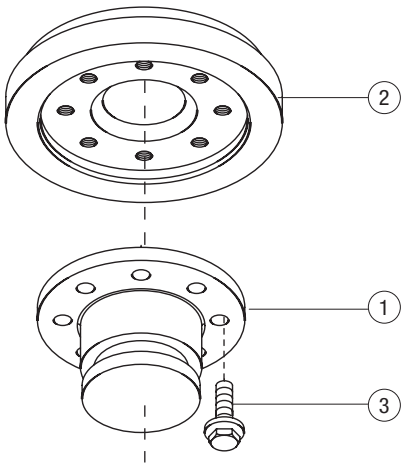

Fig.	Description	Part No.
1	King pin	KZ141601
2	Retention plate	KZ141602
3	Self-securing bolt	KZE141606

The right to alter specifications is reserved.

King Pin 2" – Access from underneath KZ2816

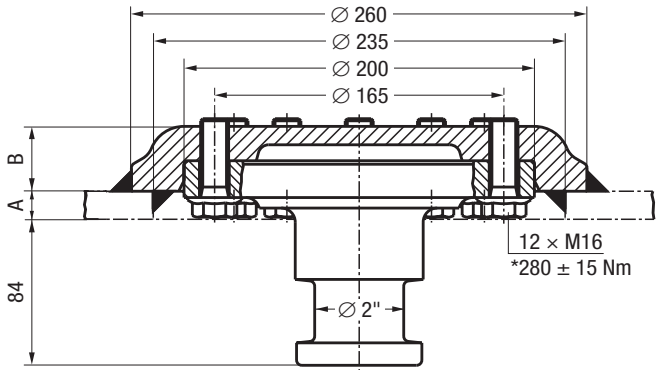

* *Torque*

Selection table / Versions available

Order No. King pins, compl.	D value (kN)	A (mm)	B (mm)	Approval (ECE)
KZ2816	152.0	16	37	–

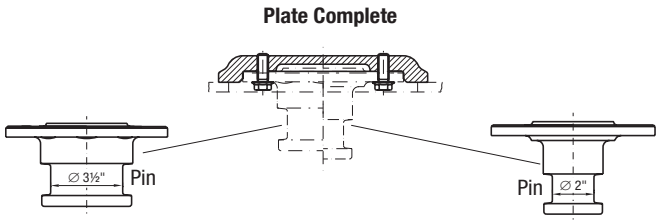

KZ141601 KZ281601

3½" & 2" king pins are easily interchangeable

Dimensions according to DIN 74080 and ISO 337
JOST king pins can be used in self steering axle systems.

Mounting must be carried out according to our instructions.

Spare Parts for KZ2816

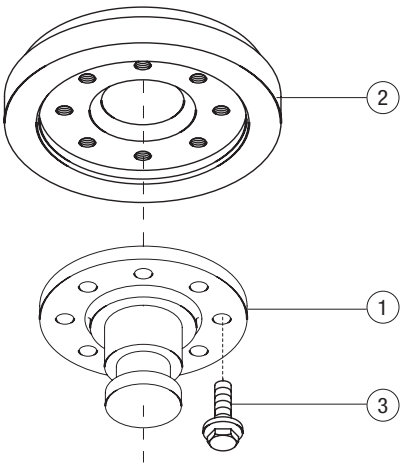

Fig.	Description	Part No.
1	King pin	KZ281601
2	Retention plate	KZ141602
3	Self-securing bolt	KZE141606

The right to alter specifications is reserved.

King Pin Lock for 2" King Pins

Low weight, handy,safe. For all 2" king pins. Completely protects not only the 2” neck, but all mounting bolts. Corrosion-resistant.

Cylinder lock of high quality, dust and water proof. Locking with normal or master keys possible.

Part number: DS2000



Spare Parts for DS2000

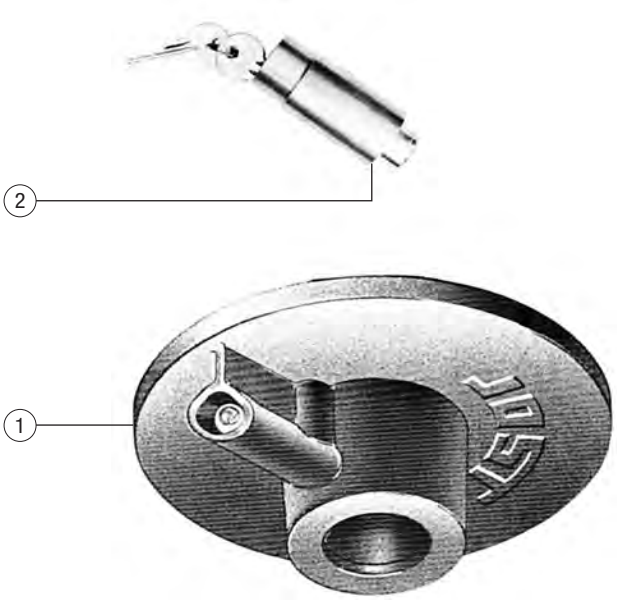

Fig.	Description	Part No.
1	King pin lock, complete	DS2000
2	Cylinder lock with 2 keys	DS100003

When reording keys or cylinder locks for locking systems having same keys, please state code number.

Wear Limit Gauge King Pin Gauge

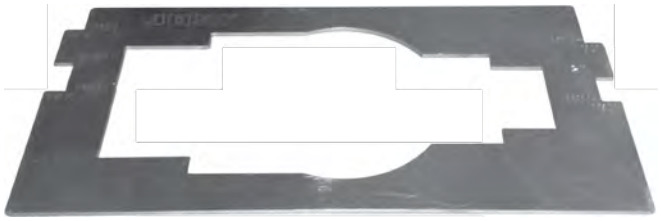

Above item is designed as a NO GO wear limit indicator, for either 50mm or 90mm king pins.

Once king pin can pass through gauge the king pin must be replaced. Also designed to check king pin protrusion.

Part number: JOSTGAUGEKINGPIN

Telescopic Landing Gear



Landing gear Modul

The Modul series of telescopic landing gear is extremely versatile. Thanks to its modular construction with variable mounting and operating heights, various crank handles and connection shaft lengths, plus five different foot types, all client requirements can be met.

Modul B is optimised standard telescopic landing gear. The Modul C range consists of various landing gears which are designed for special applications.

Both ranges offer convincing product advantages: the integrated gearbox has optimum protection, and requires minimum force to be applied on the crank handle in both directions. At the same time, Modul offers an extraordinary increase in lift of up to 120 mm combined with smaller dimensions for fitting. It goes without saying that the telescopic landing gear is extremely sturdy and complies with the strict AAR standard.

The landing gear is not a standalone, functional device. It is designed to be mounted on a trailer. The vehicle may not be operated until it has been ensured that the towed vehicle with the support complies with the applicable national road traffic regulations. In Germany, the relevant “TÜV” Safety Regulations and “StVZO” Motor Vehicle Safety Standards are to be observed. The telescopic landing gear is always to be used in conjunction with the instructions for use issued by the manufacturer of the relevant trailer.



Tried-and-tested Modul system



Since the market entrance Modul landing gears are setting benchmarks. The modular construction allows a multitude of different varieties.

- Easy to assemble and replace foot system
- Greatest flexibility of installation thanks to a range of back plates
- Various crank handles and connection shaft lengths
- Significant gain in lifting force compared to comparable products
- Attractive design
- For universal application
- Type reduction thanks to modular system guarantees high level of flexibility in spare parts business

Patented Modul drive

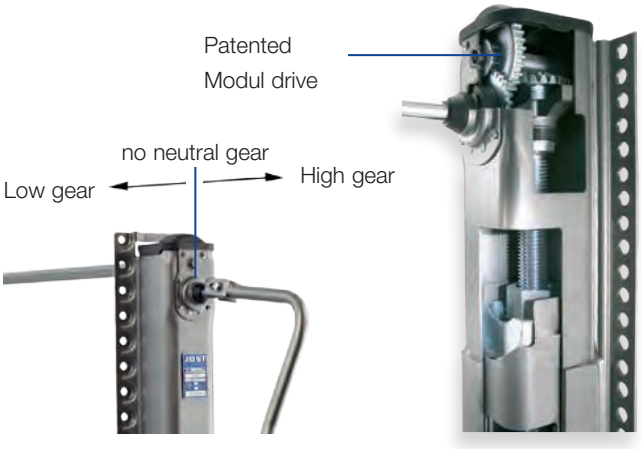

The patented drive is perfectly protected by the internal construction. In addition it offers various advantages in daily use:

- Easy to change between high and low gears
- Very compact construction with high efficiency and extremely low wear
- Large lifting force per turn of the crank with low crank force allows easy and convenient operation
- Reliably secured against run-down
- Maintenance-free

Support feet

The Modul series of telescopic landing gear are available with a range of different feet: S, A, T and TC foot.



Foot-S
(Standard)



Foot-A
(Rocking foot)



Foot-TC
(Flat sand shoe)



Foot-T
(Sand shoe)

Additional advantages

Outstanding corrosion protection
Landing gears from JOST are especially sturdy and resist also unfavorable exterior conditions.

- Careful pre-treatment
- Premium surface through powder coating
- Long-lasting protection against environmental influences and stone chips

Easy maintenance
The Modul landing gears are equipped with a long-term lubrication. Therefore they can be used three years without relubrication.

- Long-lasting, maintenance-free drive
- No need for subsequent lubrication of our premium stabilisation and aluminium telescopic landing gears with lubrication tube

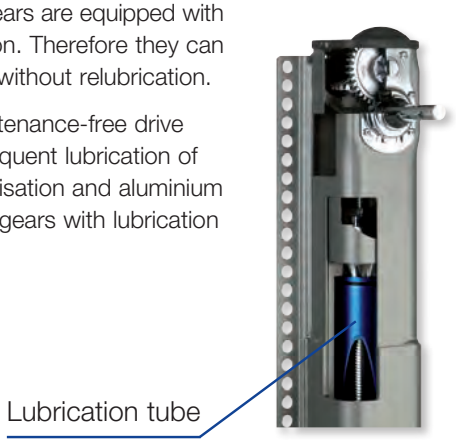

Tested and developed according to internationally recognized standards

- Regular inspection during series production based on the strict AAR standard
- Quality management in accordance with ISO/TS 16949
- Environmental management in accordance with ISO 14001
- **3 year guarantee**

Top service
Locations worldwide and a broad network of dealers ensure qualified support.

- Competent and individual advice from Sales and Customer Service
- Support for our customers using CAD data during the planning phase
- High level of prevalence and global spare parts supply with short delivery times
- Easy to repair, such as using our foot replacement system

Modul

Flexibility due to a modular ordering system

The ordering system allows clients to choose and put together a set of legs to suit their needs.



Installation height

	max. lift
02 = 850mm	520mm
03 = 800mm	470mm
05 = 700mm	400mm

Foot versions

00 = without foot

fitted		Part No.
01 = S Foot	compensating foot	JSD01
02 = A Foot	rocking foot	JSD02
03 = R Foot	wheels	JSD03
04 = T Foot	sand shoe	JSD04
06 = Low Profile T		JSD06

Crank handle with parking hook

03 = 450mm	Optional
05 = 520mm	Standard

Connection Shaft

10 = 1790mm	Standard

Note: the connection shaft is square

Modul

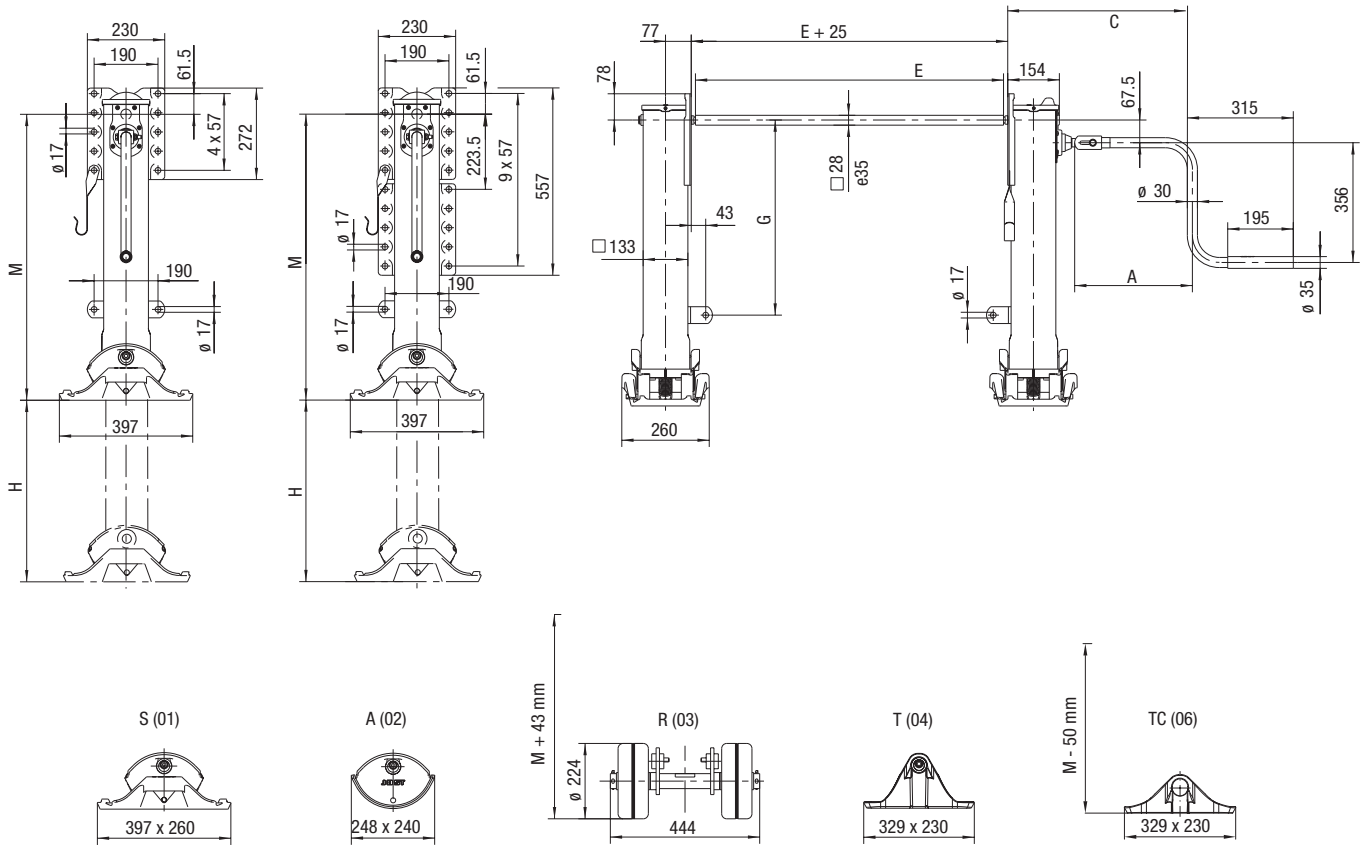

Landing gear

Reference	M	H	G
M02	850	520	580
M03	800	470	530
M05	700	400	430

Technical date (per set)

Modul B	
Lifting capacity	24t
Static load	50t 35t with wheels
Lift per turn of handle	
- low gear	0.9mm
- high gear	15.0mm
Crank force at 16t super imposed load	210N

Subject to change in dimensions and design

Crank handle

Reference	A	C
JSU03	450	634
JSU05*	520	704

Connection shafts

Reference	E
JSL10	1790

Standard with set of legs. Can be cut down to suit application.

Foot versions

00 = without foot fitted

JSD01 = S Foot	compensating foot
JSD02 = A Foot	rocking foot
JSD03 = R Foot	wheels
JSD04 = T Foot	sand shoe
JSD06 = LP T	low profile T foot

Modul B

Spare parts

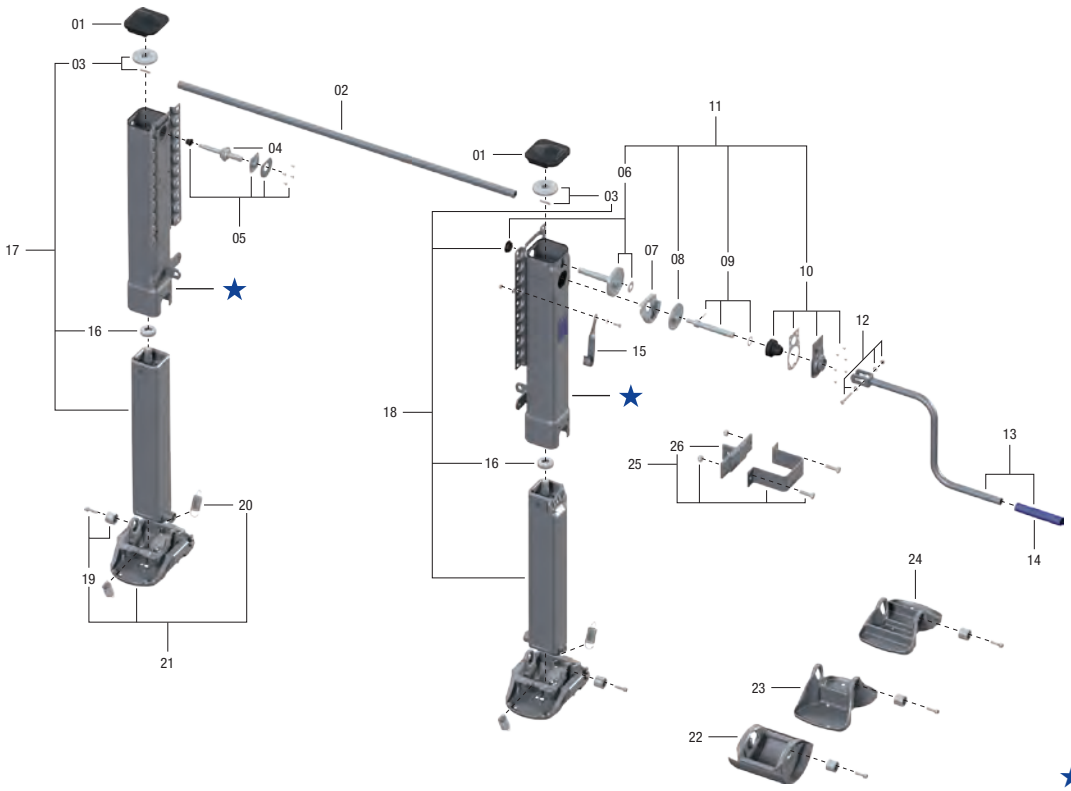

★ no spare part

Item	Description	Remark	Order No.	per kit
01	Cover		JS E0046100	2
02	See individual components			
03	Bevel gear with bolts	from 020719/0126097	JS E0058600	2
04	Shaft		JS E0001500	1
05	Bearing	compl.	JS E0046200	1
06	Shaft with bearing	a	JS E0058700	1
07	Grease tank	a	JS E0002000	1
08	Gear	a	JS E0055800	1
09	Crank shaft	compl.	JS E0046500	1
10	Bearing holder	compl.	JS E0058800	1
11	Drive	compl., with 06, 08, 09 + 10, a, c	JS E0083700	1
12	Bolts, washers, nuts		JS E0043100	1
13	See individual components			
14	Crank bushing		JS E0042700	1
15	Crank parking hook	for crank 350 mm, (JS U01), b	JS E0040200	1
15	Crank parking hook	for crank 415–480 mm, (JS U02-JS U04), b	JS E0040201	1
15	Crank parking hook	for crank 520–620 mm (JS U05-JS U08), b	JS E0040202	1
16	Axial bearing ****		JS E0066401	2
17	Mh-01/900 inner tube l. + spindle	with 16 + 03	JS E0056401	1
17	Mh-02/850 inner tube l. + spindle	with 16 + 03	JS E0056402	1
17	Mh-03/800 inner tube l. + spindle	with 16 + 03	JS E0056403	1
17	Mh-04/750 inner tube l. + spindle	with 16 + 03	JS E0056404	1
17	Mh-05/700 inner tube l. + spindle	with 16 + 03	JS E0056405	1
17	Mh-06/650 inner tube l. + spindle	with 16 + 03	JS E0056406	1
18	Mh-01/900 inner tube r. + spindle	with 16 + 03	JS E0056201	1
18	Mh-02/850 inner tube r. + spindle	with 16 + 03	JS E0056202	1
18	Mh-03/800 inner tube r. + spindle	with 16 + 03	JS E0056203	1
18	Mh-04/750 inner tube r. + spindle	with 16 + 03	JS E0056204	1
18	Mh-05/700 inner tube r. + spindle	with 16 + 03	JS E0056205	1
18	Mh-06/650 inner tube r. + spindle	with 16 + 03	JS E0056206	1
19	Nut and bolt**		JS E1043300	2
20	Spring		JS E0012900	4
21	S-Foot	compl., with 19 + 20***	JS D01	2
22	A-Foot	compl., with 19***	JS D02	2

Modul Series Landing Legs

Available in 400mm, 470mm, 520mm
Travel Standard outside flange mounting models



9” Diameter Standard Wheels	Modul R 400mm
9” Diameter Standard Wheels	Modul R 470mm
9” Diameter Standard Wheels	Modul R 520mm



329mm × 230mm Sand Shoes (T Feet)	Modul T 400mm
329mm × 230mm Sand Shoes (T Feet)	Modul T 470mm
329mm × 230mm Sand Shoes (T Feet)	Modul T 520mm



Air Suspension Feet (280mm × 240mm)	Modul A 400mm
Air Suspension Feet (280mm × 240mm)	Modul A 470mm
Air Suspension Feet (280mm × 240mm)	Modul A 520mm



Compensating Feet (397mm × 260mm)	Modul S 400mm
Compensating Feet (397mm × 260mm)	Modul S 470mm
Compensating Feet (397mm × 260mm)	Modul S 520mm



Supplied without Feet can take R.T.S or A Feet	Modul WF 400mm
Supplied without Feet can take R.T.S or A Feet	Modul WF 470mm
Supplied without Feet can take R.T.S or A Feet	Modul WF 520mm

Note: Inside flange mounting models also available

Landing Legs – A400 Series

Load Capacities per pair

Lifting Capacity at 100 ft. lbs. input torque	**25 tons**
Static Load Capacity	**80 tons**
Side Load Capacity	**14.5 tons**



Landing Gear Dimensions - Outside Mount

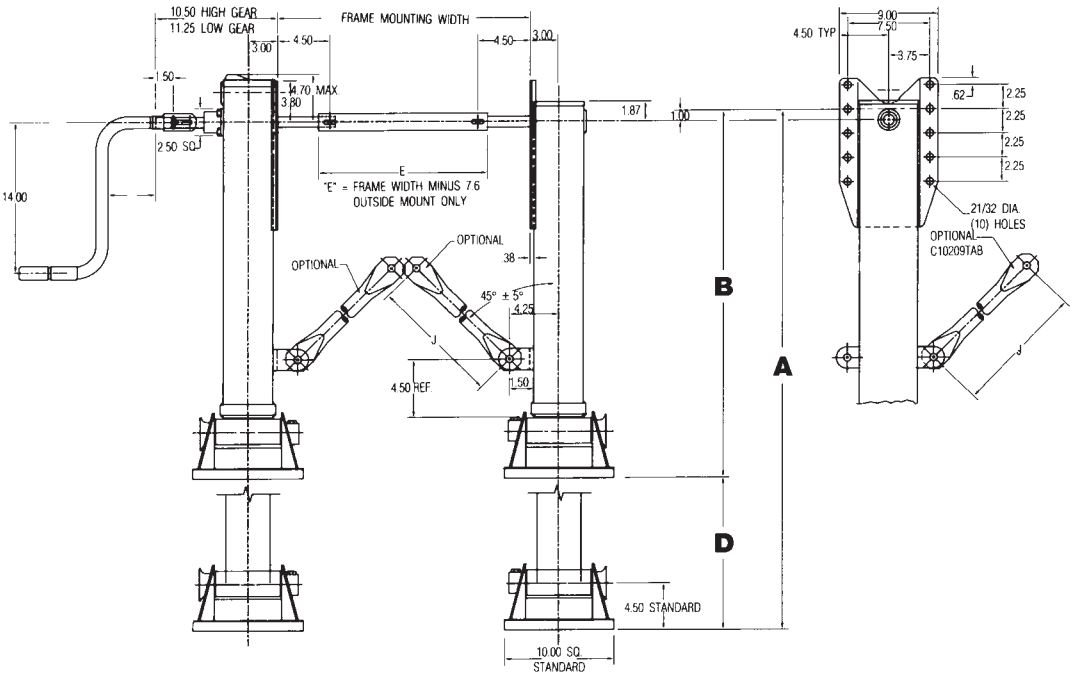

Travel Option Dimensions

Model	D - Travel	A - Extended	B - Retracted
A400/A/G/T/R/S	14" (355.6mm)	42 5/8" (1082.675mm)	28 5/8" (727.075mm)
A400/A/G/T/R/S	17" (431.8mm)	48 5/8" (1235.075mm)	31 5/8" (803.275mm)
A400/A/G/T/R/S	19" (482.6mm)	52 5/8" (1366.675mm)	33 5/8" (854.075mm)
A400G317	17" (431.8mm)	45 5/8" (1158.875mm)	28 5/8" (727.075mm)

Landing Legs – A400 Series

Individual Components

Item	Description	Qty.	Part No.
06	Standard Crank w/Hardware 17¾"	1	C10592.4 &
			C10592.4R
07	Crank Hanger	1	B10261
10	Brace Lug - W	2	C10108
11	Intermediate Cross Shaft	1	B10066
12	Cover Screw	4	A10059.1
13	Cover - 2 Speed	1	C10217
14	Cover - 1 Speed	1	C10259
15	Pinion Gear	1	C10177
16	Bevel Gear	2	C10155
17	Pinion Shaft - 1 Speed	1	B10130
18	Thrust Washer	2	A10102
19	Grooved Pin	2	A10052.3
20	Spacer Washer	2	A10218
21	Grease Fitting	4	A10040
22	Grease Seal	1	A10283
24	Self Locking Nut	4	A10038.7
25	Cross Shaft Bolt – ⅜" x 2" Gr5	2	A10037.1
26	Thrust Bearing	2	A10033
27	Collar	2	A10101
28	Output Shaft	1	A10212
30	Bushing	2	A10255
33	Roll Pin – ⅜" × 1½"	1	A10054.3
34	Spiral Pin	2	A10260.1

Item	Description	Qty.	Part No.
35	Roll Pin – ⅜" × 1¾"	1	A10054.7
36	Output Cluster Shaft	1	B10236
37	Output Cluster Gear	1	C10234
38	Input Gear Shaft	1	C10233
39	Output Spur Gear	1	C10078
40	Input Spur Gear	1	C10085
41	Detent Spring	1	A10049
42	Detent Ball	2	A10048
43	Shift Housing incl. 31, 32	1	B10229*
	Shift Housing incl. 41, 42	1	B10229S
44	Shift Housing Bolt	4	A10230
45	Self Locking Nut	4	A10038.6
46a	Shoe – 10" × 10" × 4½" Standard	2	C10035
46b	Low Profile T Foot	2	C10135
47	Shoe Axle	2	B10036
48	Hex Head Bolt	2	A10037.3
49	Roll Pin – ¼" × ¼"	1	A10054.6
50	9" Dia Standard Wheel	4	C10342
51	Wheel Axle	2	B10300
52	Air Suspension foot (pressed type) c/w axle	2	JS11160340C
53	Axle for pressed air foot	2	B10036.1
54	Compensating foot c/w axle	2	JS1116358CN
55	Axle for compl. foot	2	B10036.1

*Not Available as single item, included in part number 43

Footwear Options

Description	Order Code	Description	Order Code
10" × 10" Cushion Foot	G	Compensating foot	S
9" Dia. Standard Wheels	R	10" × 10" × 4½" Sand Shoes	T
Air Suspension	A	Low Profile T	T1

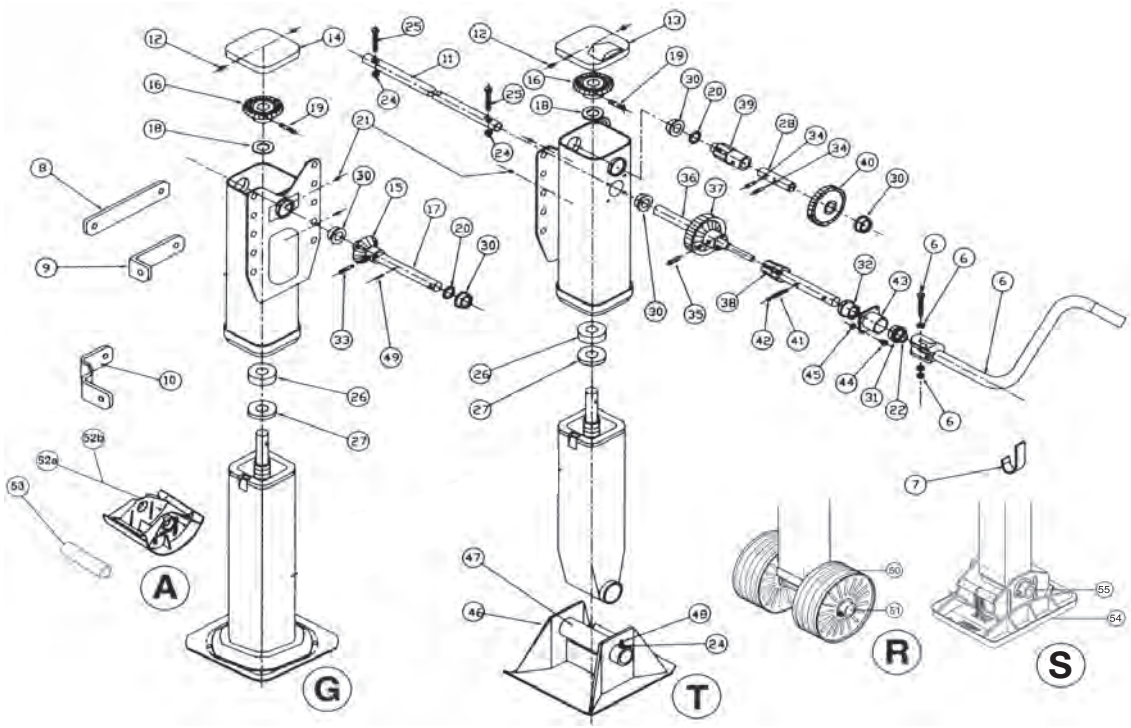

Mounting and maintenance instructions

Mounting instructions

Before mounting, both jacks must be in retracted position, in order to take advantage of the total stroke after mounting connection shaft and to avoid premature ground touch of one jack. Otherwise one single jack would have to carry the total load, causing damage.

The jacks must be mounted parallel and properly aligned, otherwise the connection shaft could tilt and make the landing gear hard to operate.

Fitting and bracing should be carried out as shown below.

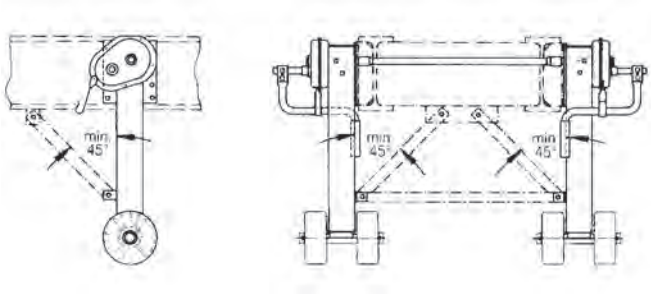

The introduction of air suspension on semi-trailers has resulted in an increase of related problems.

When the semi-trailer has been standing for a considerable time a loss of air in the suspension is liable to occur, causing the rear part of the trailer to sink down.

This in turn results in an angular movement of the axle, forcing the trailer in the direction of travel if the brakes are on. This movement depends on the type of air suspension, the spring deflection and the size of the tyres.

The larger the drift and the greater the force the greater is the chance of the landing gear being subjected to a force with which it cannot cope, ultimately resulting in it being bent. This damage is a secondary consequence of the loss of air.

This can be avoided by using landing gear with drift compensation.

The **JOST** “A” foot is a semi-wheel which is able to compensate for the entire movement of the trailer and remove the force of drift from the landing gear.

A paved surface is essential for the correct function of this version.

A further variation is the **JOST** “S” foot. The large sand shoe cannot sink in and can therefore also be used on an unpaved surface.

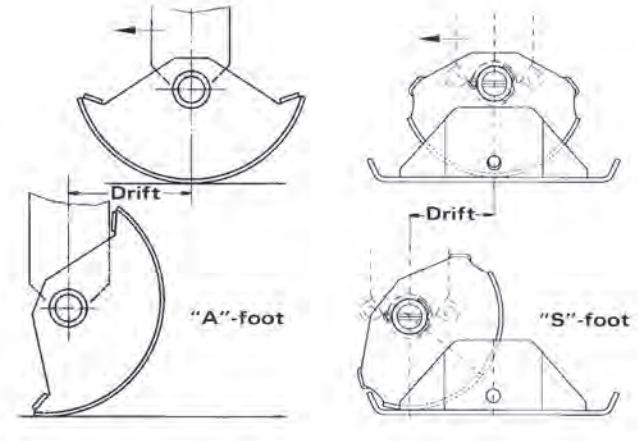

Operating instructions

Uncoupling:

1. Block wheels of semi-trailer.
2. Unlock and engage crank handle.
3. Wind down landing gear in high gear until ground is touched.
4. Shift to low gear position by pushing the crank handle towards the gear box for MODUL legs, pull he crank handle out to select low gear for A400 and E110 legs an lift to necessary height.

   Caution: Stop cranking when end of travel is reached.

Coupling-up:

1. After locking the fifth wheel wind-in landing gear in low gear until inner leg has left the ground.
2. Shift to high gear by pulling the crank handle and wind-in inner leg.

   Caution: Stop cranking when end of travel is reached.
3. Fasten crank handle in holder, making sure that high gear is still engaged.

Maintenance instructions

The landing gear received adequate initial lubrication during manufacture. Relubrication is possible through grease nipples provided.

The spindle is lubricated with BP grease JS12 by the lower of the two grease nipples located on the side of the housing. Prior to lubrication wind down the landing leg as far as possible and during lubrication slowly wind it up. For subsequent lubrication of the other greasing points we recommend the use of high pressure grease (EP) with MoS, or graphite additive, for example:

BP L2 1M
BP HT-EP 1
BP JSS2
Esso universal grease M
Shell Retinax AM

When inspecting the trailer, all parts which are subject to wear must be checked and replaced if necessary.

These instructions are based on normal conditions of use. In the case of difficult operating conditions the maintenance and lubrication intervals must be reduced accordingly.

Towing Hitches & Tow Eyes



Towing eyes 40mm

ROE57374

Towing eyes according to DIN 74054-40A pressed-in replaceable towing eye sleeve 40 mm inner diameter

Part number	ROE57374
D-value	125kN
Weight	5kgs
Down load	250kgs
Approval Number	ECE E1 55R-01 2203

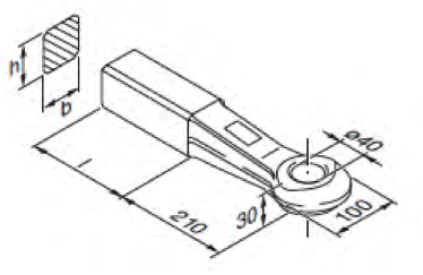

H	B	L
65	57	125

Towing eyes 50 mm

ROE57272

Towing eyes according to DIN 74053 pressed-in replaceable towing eye sleeve 50 mm inner diameter

Part no.	**ROE57272**
Material:	heat-treated steel St 52-3
D-value:	190 kN
Weight:	10.3 kgs
Down Load:	1000 kgs
Approval Number	ECE E1 55R-01 2335

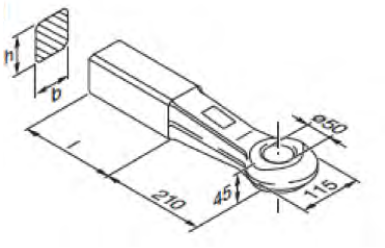

H	B	L
65	60	170

ROE57005 c/w solid bush

Part no.	**ROE57005**
Material:	heat-treated steel St 52-3
D-value:	314kN
Weight:	13.4 kgs
Down Load:	1000 kgs

D-value is reduced to 190kN with 100 kgs down load.
Approval Number ECE E1 55R-01 2146

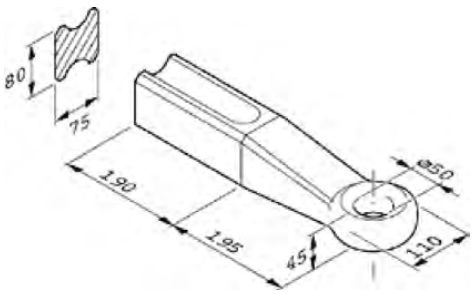

Tow Eye - Flange Mount

ROE57423

Tow eye 8 bolt flange mount 50mm inner diameter

Part number	ROE57423
D-Value	200kN
S-Value	2500kgs
V-Value	43.2kgs
Approval Number	E1 55R-02 0045

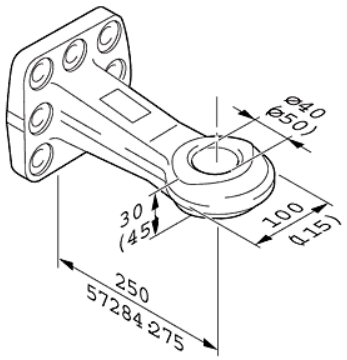

Flange Mount - Backing Plate Including Bolts

ROE70304

Flange mount tow eye backing plate including bolts

Part number	ROE70304
a (mm)	100
b (mm)	110
c1 (mm)	154
c2 (mm)	154
d (mm)	110
e (mm)	17.0

Part no: ROE70950 - Bolt kit if required separately

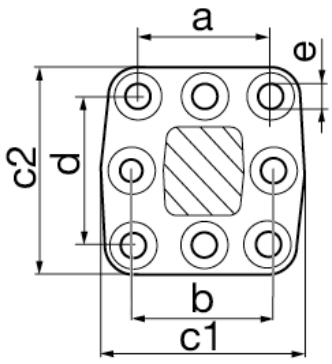

Towing eyes 50mm - Replaceable Toweye

JOST 57254

Part no: **JOST 57254**
D-Value: 260 kN
Weight: 18,5 kg
CRN: 42292

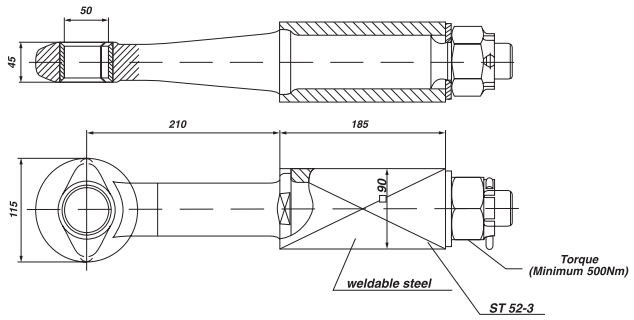

Spare parts for towing eyes JOST 57254

Fig.	Description	Part No.
01, 03, 04, 05, 06	Towing eye with Fig. 6	JOST 57254E
02	Towing eye housing	JOST 57254B
04, 05	Nut	R56049
06	Solid Bush	JOST 53362

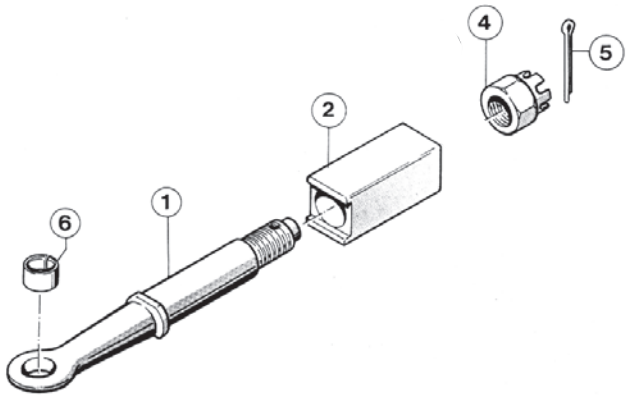

The right to alter specifications is reserved.

Towing eyes



Part no.	**BPCBDB1394**
Model:	45-Ton Forged Heavy Duty Towing Eye
Description:	Finished with black powder coat for superior durability and corrosion resistance.
D-Value:	165kn
CRN:	37264
Dimensions:	3" I.D. with 1.62" section drawbar with 4 hole square mounting plate.



Part no:	**JOST0063126**
Model	76mm Demountable Pintle Eye
D Value	125kN
V Value	7 Tonne
ATM	25 Tonne
CRN	41615
Eye Dimension	76.5mm
Shank Dimension	50mm
Block Dimension	90x90x150mm
Total length	435mm

JOST Tow Eye Lock

Features:

1. 10mm thick top and bottom plate, case hardened.
2. No padlock, uses highly developed Super Lock Bolt, 25.4mm diameter, case hardened body. Anti drill centre pin, 10 pin radial pin tumbler lock insert with over 1 million possible key combinations.
3. Easy to operate, only the lock bolt needs to be removed to unlock trailer.
4. Lock bolt can only be locked/unlocked using key, no accidental locking possible.
5. Dust cap provided to prevent ingress of dust and dirt into lock.
6. Finished in highly visible, yellow powder coating.
7. 2 keys supplied with lock as standard. Multiple locks can be supplied with same key for fleet or multi user applications.
8. Independantly tested and approved by SCM. Approval No. MP030417.

Model	Dimension 'A'	Dimension 'B'	Weight
SA12 Eye Lock	51mm	95mm	5.0kg



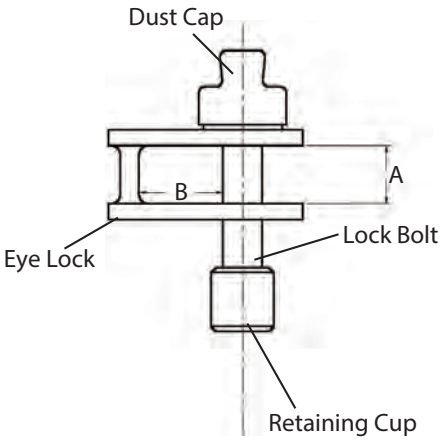

Welding instructions recommended for Rockinger Drawbar Eyes

1. **Rockinger** drawbar eyes are provided for welding into the drawbar by electric arc welding, preferably done under a protective gas shield.
2. The steel of the drawbar has to be weldable, e.g. made of St 37-2 or St 52-3 or any other compatible weldable steel with a carbon content of less than 0.22%.
3. Remove all paint, grease and rust from welding surfaces. Heating up of drawbar eye to 200 - 250°C before beginning to weld is recommended.
4. The drawbar eye must not be welded within a length of *mm measured from the middle of the drawbar eye access towards the back. This part should protrude out of the drawbar.
5. The welding should be exercised in one seam at a time only, in order to avoid overheating the surrounding space of the welding seam.
6. Carry the welding onwards to the direction of the drawbar eye access in one procedure.
7. All seams have to be layed in longitudinal direction of the drawbar eye's shaft. Never and by no means crosswire.
8. Each seam of welding should be set one by one diagonally opposite to the last one, so you maintain an even radiation of heat.
9. Cooling down of the welding should take place where the air is still; do not immerse into water or pour water over it.
10. If wanted, you can place slot welds through the lateral surface of the drawbar's sectional steel. This is in order to fix the drawbar shaft to the drawbar additionally.
11. The thickness of the welding seams is to be approximately 8mm in full V- shape or half V-shape.
12. The thickness of the sectional connecting bars should be atleast 8mm, better from 10mm - 12mm.

Drawbar eyes:

57268DIN	65 × 55	∅ 40mm = 210mm
57262DIN	50 × 40	∅ 40mm = 210mm
57260DIN	40 × 40	∅ 40mm = 210mm
57272DIN + ISO	65 × 60	∅ 50mm = 210mm
57254 **Rockinger** for 56, 561 and 702		∅ 50mm = 195mm
57006 ring 41 strong, NATO		∅ 76mm = 180mm

Couplings and drawbar eyes

Coupling and drawbar eye size

- Hole pattern in the crossbar of the towing vehicle
- Hole pattern in the coupling flange
- Pin size of the coupling

Characteristic values

- Values of the coupling
- Values of towing vehicle and trailer (see vehicle registration certificate)
- Values of the drawbar eye

Truck and trailer: D-value

- Theoretical horizontal force between towing vehicle and trailer
- The D-value can only be calculated with the permissible total weight of both truck and trailer.
- Calculation of the D-value [kN] with formula 1 (F1):

T : Total weight of the towing vehicle in t
R : total weight of the drawbar trailer in t
g : Gravitation acceleration 9,81 m/s²

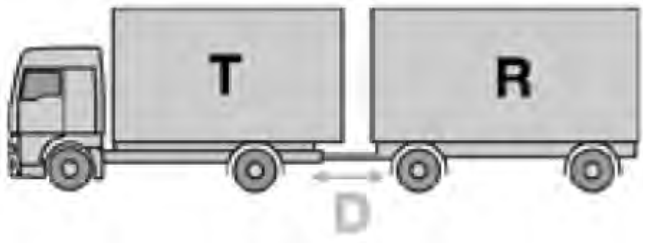

$$F1 \rightarrow \quad D\,(kN) = g \cdot \frac{T \cdot R}{T + R}$$

$$F2 \rightarrow \quad D\,(kN) = g \cdot \frac{R_1 \cdot R_2}{R_1 + R_2}$$

The calculated D-value can be equal to or lower than the D-value of the coupling and of the drawbar eye.

In case of mounting on a trailer is permitted use formula 2 (F2):

R1 : Total weight of trailer where the coupling is mounted (max. 24 t) R1 ≥ R2

Towing vehicle and central-axle trailer: Dc-value (Valid only in connection with the V-value

- Theoretical horizontal force between towing vehicle and trailer
- The Dc-value can only be calculated with the permissible total weight of both towing vehicle and central-axle trailer.
- Calculation of the Dc-value with formula 3 (F3):

T : Total weight of the towing vehicle in t
C : Sum of the axle loads of the central-axle trailer in t
g : Gravitation acceleration 9,81 m/s²

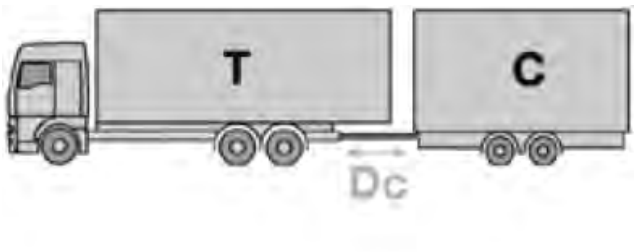

$$F3 \rightarrow \quad Dc\,(kN) = g \cdot \frac{T \cdot C}{T + C}$$

The calculated Dc-value can be equal to or lower than the Dc-value of the coupling and of the drawbar eye.

Central-axle trailer: V-value (Valid only in connection with the Dc-value)

- Vertical force for central-axle trailer
- Dependent on the rear axle suspension of the towing vehicle.
- Calculation of the V-value [kN] with formula 4 (F4):

a : An equivalent verticle acceleration in the coupling point in m/s² (a = 1, 8 for vehicles with air suspension/ a = 2, 4 for vehicles with other suspensions)
l : Theoretical drawbar length in meters
x : Length of the loading area in meters (x^2/l^2 : atleast 1, 0)
C : Sum of the axle loads of the central-axle trailer in t

The calculated V-value can be equal to or lower than the V-value of the coupling and of the draw- bar eye.

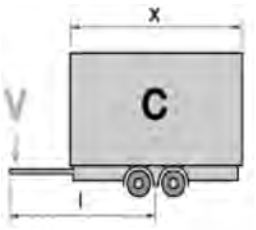

$$\text{F4 --> } V\,(kN) = a \cdot \frac{x^2}{l^2} \cdot C$$

Central-axle trailer: Static vertical load (Valid only in connection with the V-value)

- Vertical load of the central-axle trailer on the coupling point.
- The vertical load depends on the size of the coupling and the maximum is 10% of the gross weight of the trailer or 1000kg (whichever is less).
- When using a central-axle trailer the vertical load should amount to at 4% of the trailer weight in order to prevent increased wear caused by bouncing of the drawbar eye.

Series RO400B51001

Standard hitch

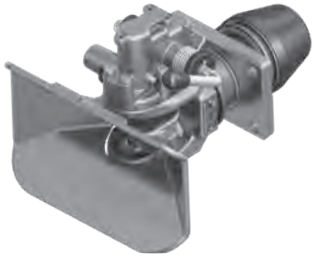



a = 40 mm
DIN 74054, ECE R55-01 (Class S)

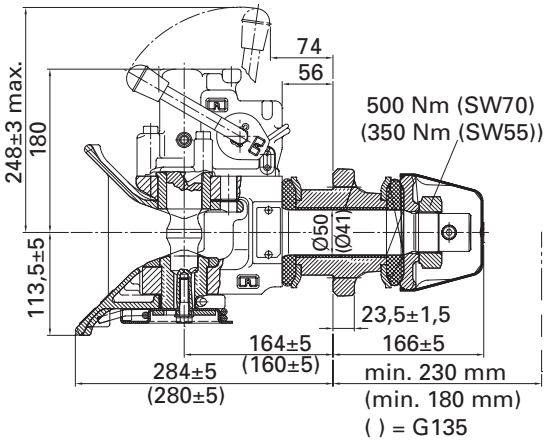

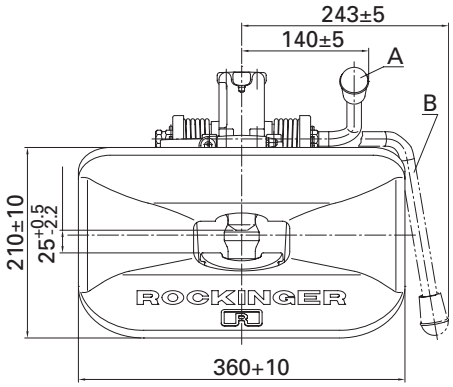

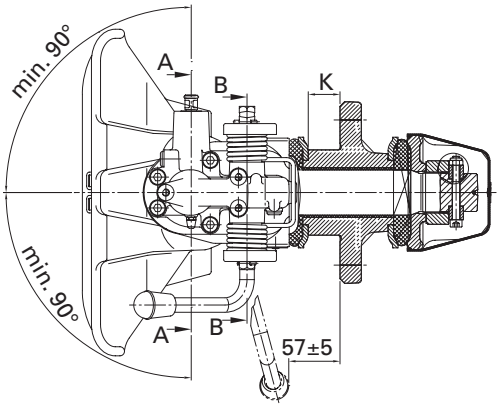

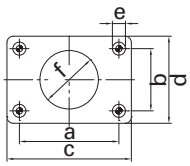

Size	a (mm)	b (mm)	c (mm)	d (mm)	e (mm)	f (mm)	k (mm)	k (mm)
150	160	100	200	140	21	94	11-35	max. 35

Technical Data

Part no.	Size (mm)	Hole pattern (mm)	Admissible D-value (kN)	Admissible Dc-value (kg)	Admissible V-value (kN)	Weight (kg)	ECE	CRN	ROE
400A5100	150	160 x 100	130	90	35	35	010350	43169	70971

Spare parts for RO400B51001

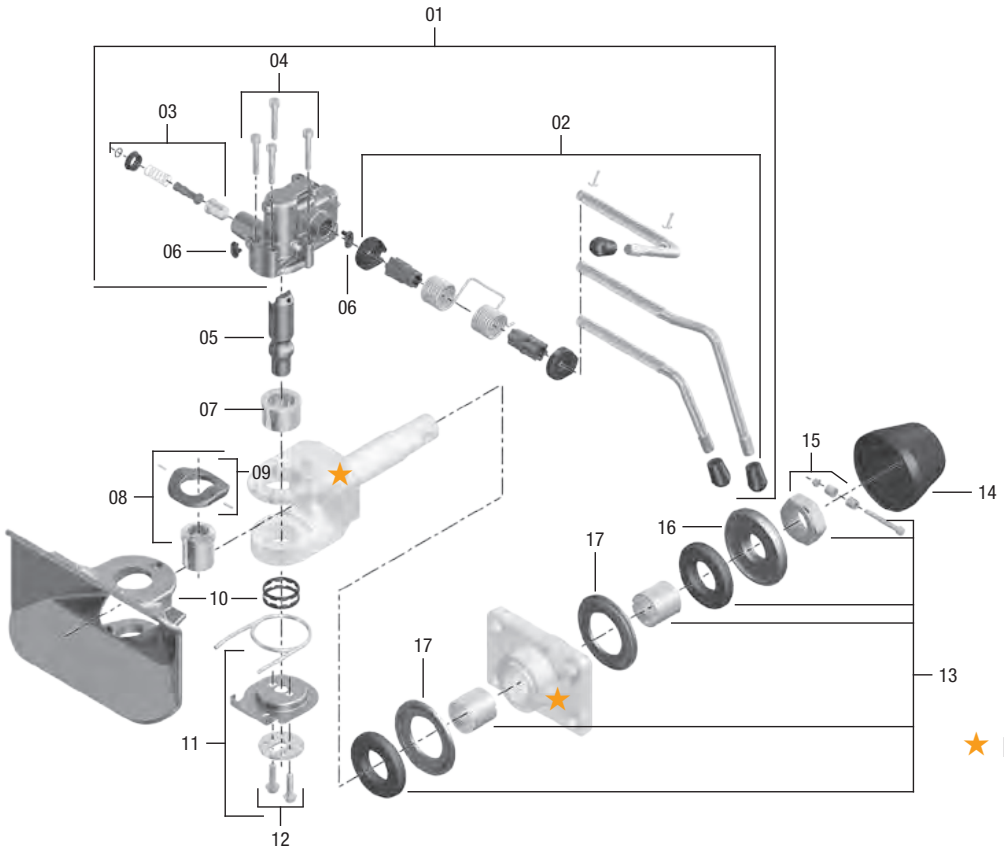

Fig.	Description	Part No
01	A	R0E71448A
	B	R0E71448B
	B 400B36501	R0E71835B
02	A	R0E71795A
	B	R0E71795B
	B 400B36501	R0E71795B
03		R0E71491
04		R0E30361
05		R0E47099
06		R0E25558
07		R0E53520
08		R0E71718
09		R0E59415

Fig.	Description	Part No
10		R0E46109
11		R0E71331
12		R0E30486
13	G135	R0E71639
	G145/150	R0E71640
14	G135	R0E25254
	G145/150	R0E25347
15	G135	R0E71641
	G145/150	R0E71796
16	G135	R0E59280
	G145/150	R0E59279
17	G135	R0E44160
	G145/150	R0E44161

Fig.	Part No
03, 05, 07, 08, 11	R0E71728

Series RO500B66500

Fully automatic towing hitch

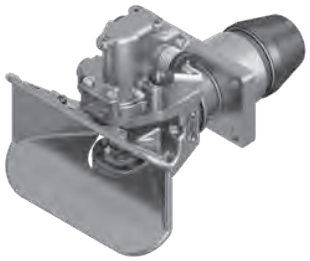



a = 50 mm
DIN 74053, ECE R55-01 (Class D)

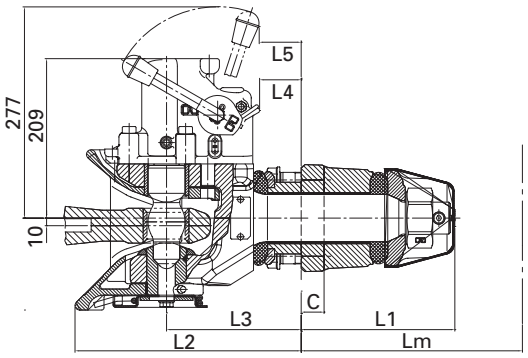

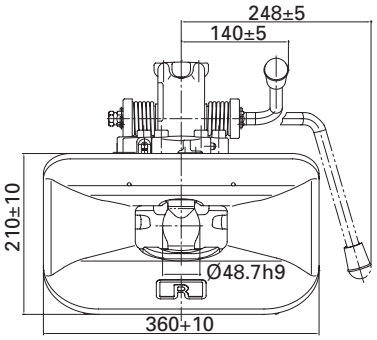

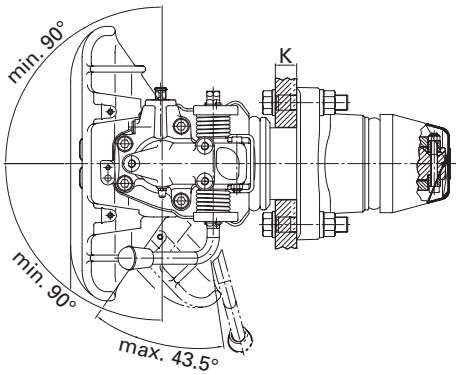

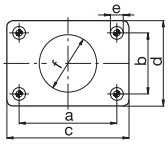

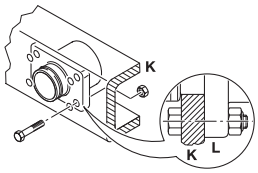

Size	a (mm)	b (mm)	c (mm)	d (mm)	e (mm)	f (mm)
6	160	100	200	140	21	94

Size	L1 (mm)	L2 (mm)	L3 (mm)	Lm (mm)	C (mm)	S (mm)	Lm (mm)
6	202	297	177	54	55	35	290

Technical data

Order no.	Size	Hole pattern (mm)	Admissible D-value[2] (kN)	Admissible Dc-value*(kN)	Admissible static vertical load[3] (kg)	Admissible V-value[2] (kN)	Weight (kg)	ECE	CRN
RO500B66500	6	160 × 100	200	140	2500	60	50,5	011844	43546
RO500B66500	6	160 x 100	285	140	1000	90	50,5	011844	43545

Spare parts for RO500B66500

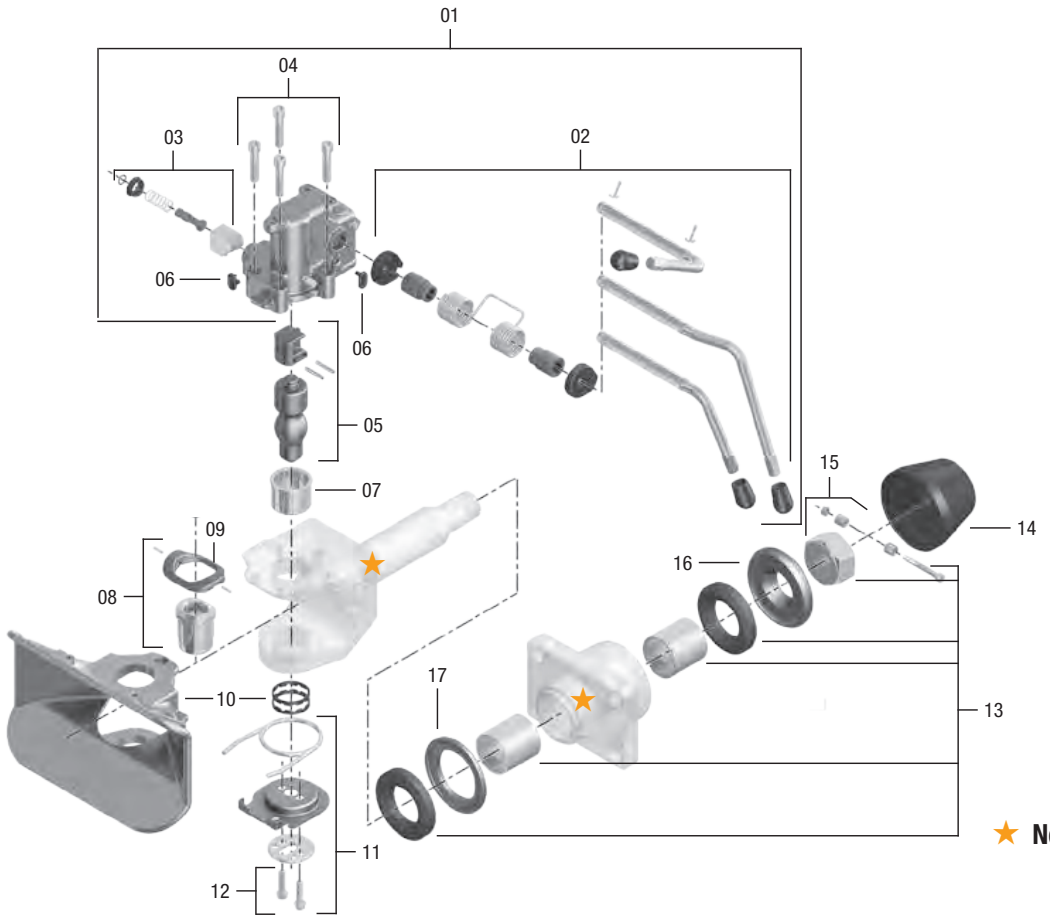

Fig.	Description	Part No
01	ROxxxBxxxx	ROE71442B
02	ROxxxBxxxx	ROE71644B
03		ROE27009
04		ROE30417
05		ROE47130
06		ROE25558
07		ROE53604
08		ROE53637
09		ROE59428

Fig.	Description	Part No
10		ROE46145
11		ROE71331
12		ROE30486
13	G135	ROE71801
14	G145/150	ROE25347
15	G135	ROE71802
16	G145/150	ROE59393
17	G135	ROE44177

Fig.	Part No
03, 04, 05a, 07, 08, 11	ROE71805

Series RO56E



Versions available

Order no.	(mm)	D-value	Weight	Approval Number
RO56E	s. drawing	314	80	ECE E1 55R-01 1630

50mm fully automatic trailer coupling
Heavy duty coupling for highway and off road

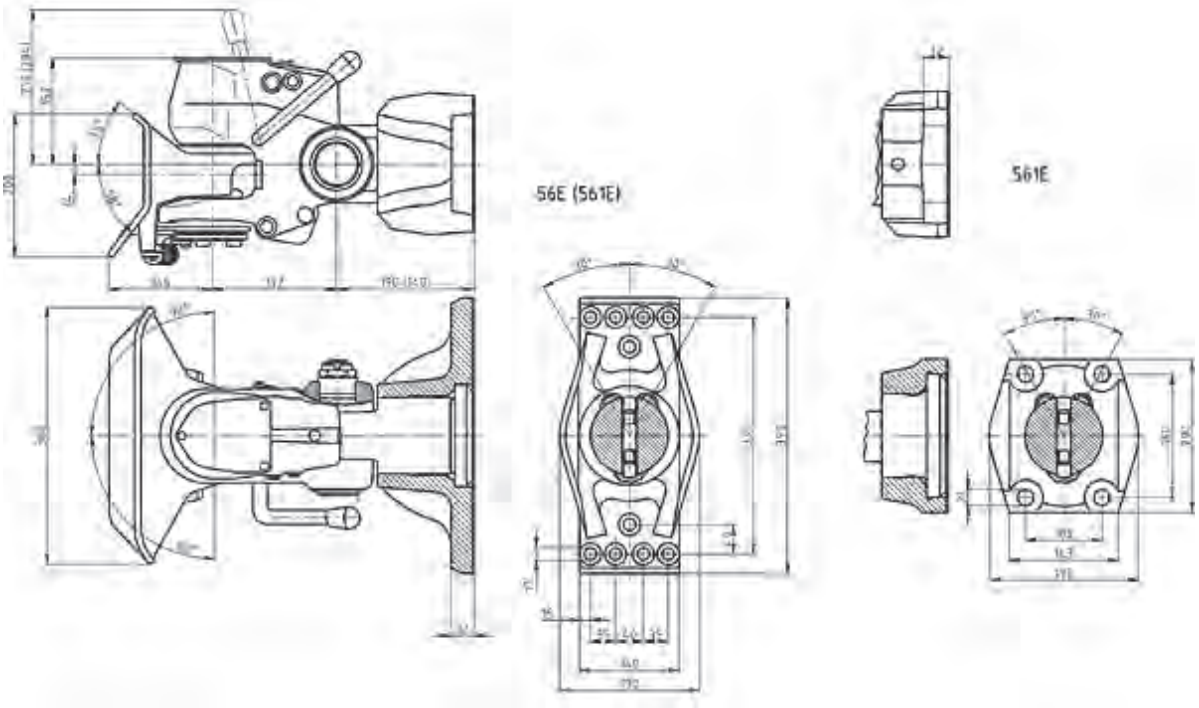

Spare parts for Series RO56E

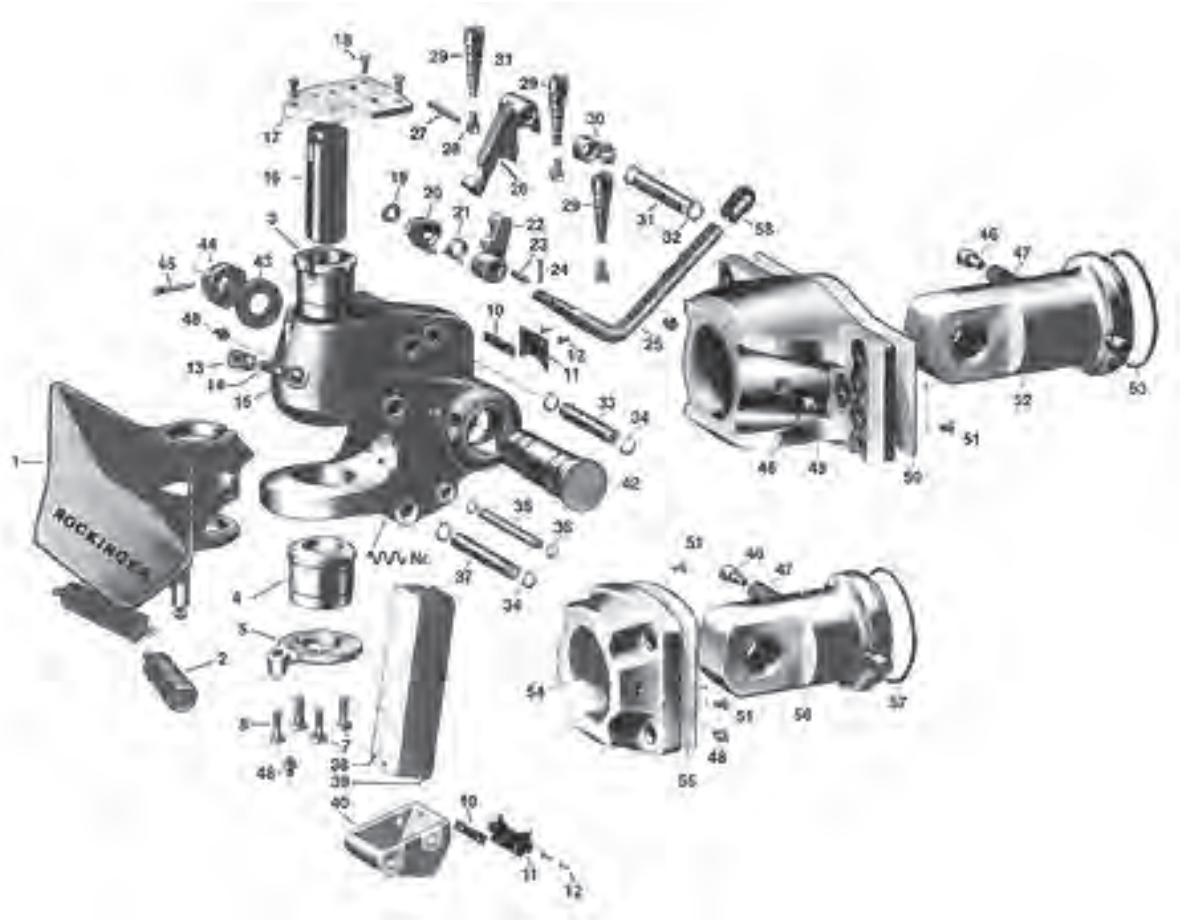

Fig.	Description	Remark	Part No.	Qty
01	Funnel	with 3	70463	1
02	Funnel spring		55005	2
03	Upper bush		53019	1
04	Lower bush		53244	1
05	Base plate	for vers. E	65549	1
07	Bolt M 10 × 28	DIN 9311	57236	1
08	Bolt M 10 × 30		56024	1
10	Spacer		15008	1
11	Buffer cover		25010	2
15	Safety pin		68000	1
16	Hitch pin	for vers. E	47041	1
17	Sealing cover	with spring cap	65009	1
18	Bolt M 6 × 12		70249	1
19	Washer 16		33011	1
20	Notch lever		51012	1
22	Locking lever		51013	1
23	Grooved pin 8 × 30	DIN 1474	32007	1
25	Hand lever	for type 561E	50092	1
25	Hand lever	B, for type 56EU	50177	1
25	Hand lever	for type 56E	50084	1
26	Lifting lever	with pin 27	51036	1
28	Locking spring cam		13005	3

Fig.	Description	Remark	Part No.	Qty
29	Locking spring		55024	3
30	Support		65010	1
31	Axle to lift up lever		52002	1
33	Bolt 18 ×113		52011	1
37	Bolt 18 × 139		52009	1
38	Leaf spring 2		55026	14
40	Spring cap	with 10, 11, 12	65066	1
43	Washer 31		33002	1
46	Notch cam		52014	2
47	Cam spring		55028	1
50	Spacer		54274	1
52	Drawbar element		42016	1
53	O-ring or 129, 2-5, 7	for type 56 E	25062	1
55	Spacer		54276	1
56	Drawbar element	for type 561 E	42014	1
57	O-ring or 149, 2-5, 7		25063	1
58	Cap		25104	1
R	Repair set	03, 04, 16, 21, 24, 32, 34, 34-1, 35, 36, 39, 42, 44, 45, 48, 48-2, 49, 54	66920	
R	Repair set	03, 04, 16, 21, 24, 32, 34, 34-1, 35, 36, 39, 42, 44, 45, 48, 48-1, 48-2, 49, 54	67252	

Series RO243



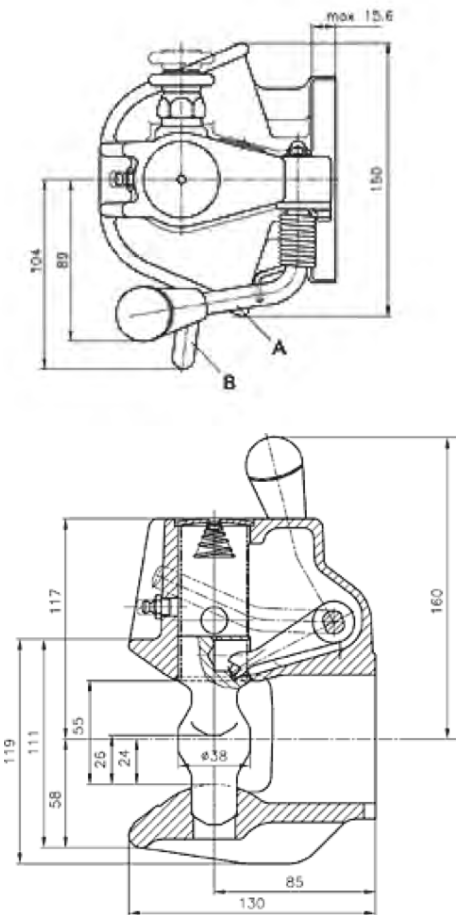

Versions available

Order no.	A/B	Size	Hole pattern (mm)	Admissible D-value[1] (kN)	Admissible Dc-value[1] (kN)	Admissible static vertical load (kg)	Admissible V-value[1] (kN)	(kg)	e1 CE/94/20/cl. C50-X
243A3500	A	135	120 × 55	30	30	350	12,0	4,4	00-0051

[1] s. p. 14
[2] diagonal
Also for industrial trucks (transport carts, fork lift trucks, etc.) with maximum total weight up to 5t and maximum towed load up to 20t (without vertical load only for inside-factory transport).

Spare parts for Series RO243

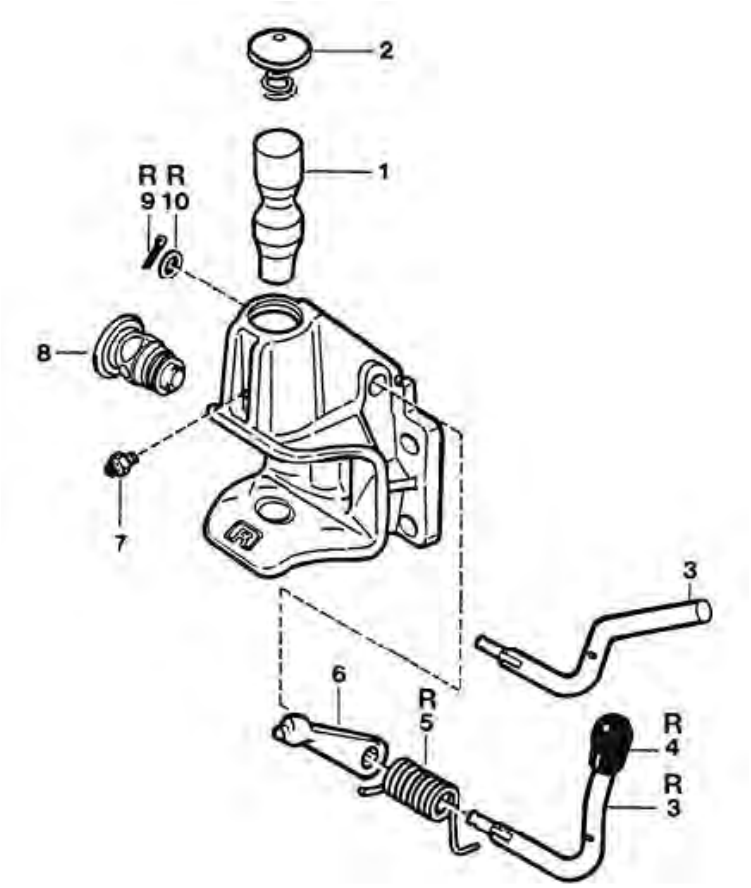

Fig.	Description	Remark	Part No.	Quantity
01	Coupling pin		R47026	1
02	Sealing cover		R67411	1
03	Hand lever	with 04, 09, 10 for vers. new A11, A12; old N, U	R70355	1
04	Cap		R25106	1
05	Locking spring	in 06		1
06	Repair set locking lever	03, 04, 05, 09, 10	R70927	1
07	Drive-in grease nipple A 10 × 1		R65018	1
08	Safety system		R70618	1
09	Split pin	in 03, 06		1
10	Washer	in 03, 06		1
	Type plate	on request		

Series RO283 - 76mm

Hook trailer hitch with buffers and safety lock

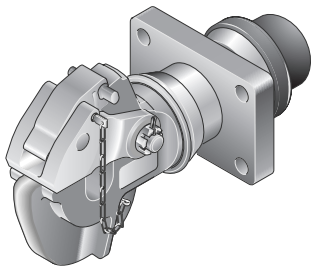



a = 76 mm
VG 74059
NATO

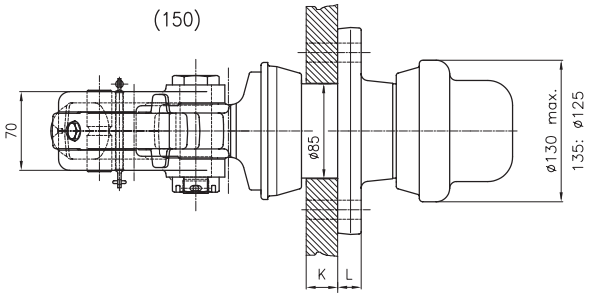

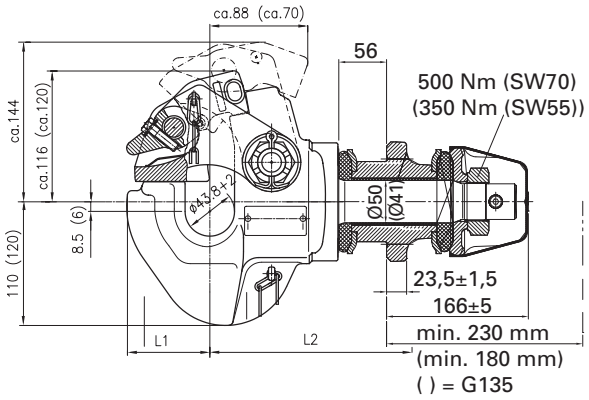

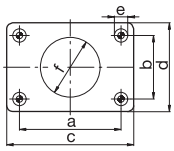

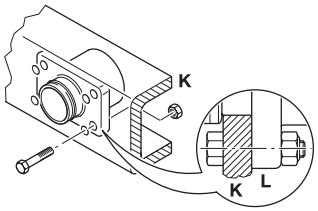

Size	L1 (mm)	L2 (mm)	L3 (mm)	L4 (mm)
150	88	180	156	424

Size model	a (mm)	b (mm)	c (mm)	d (mm)	e (mm)	f (mm)
150	160,0	100,0	200,0	140,0	21,0	94,0

Size model	K (mm)	K (mm)
150	28	28

Technical data

Order no.	Size	Hole pattern (mm)	Admissible D-value[2] (kN)	Admissible Dc-value*(kN)	Admissible static vertical load[3] (kg)	Admissible V-value[2] (kN)	C (t)	R (t)	Weight (kg)
RO 283A50002	150	160 × 100	160	54	1500	21,6	9,0	40	31

Spare parts for Series RO283

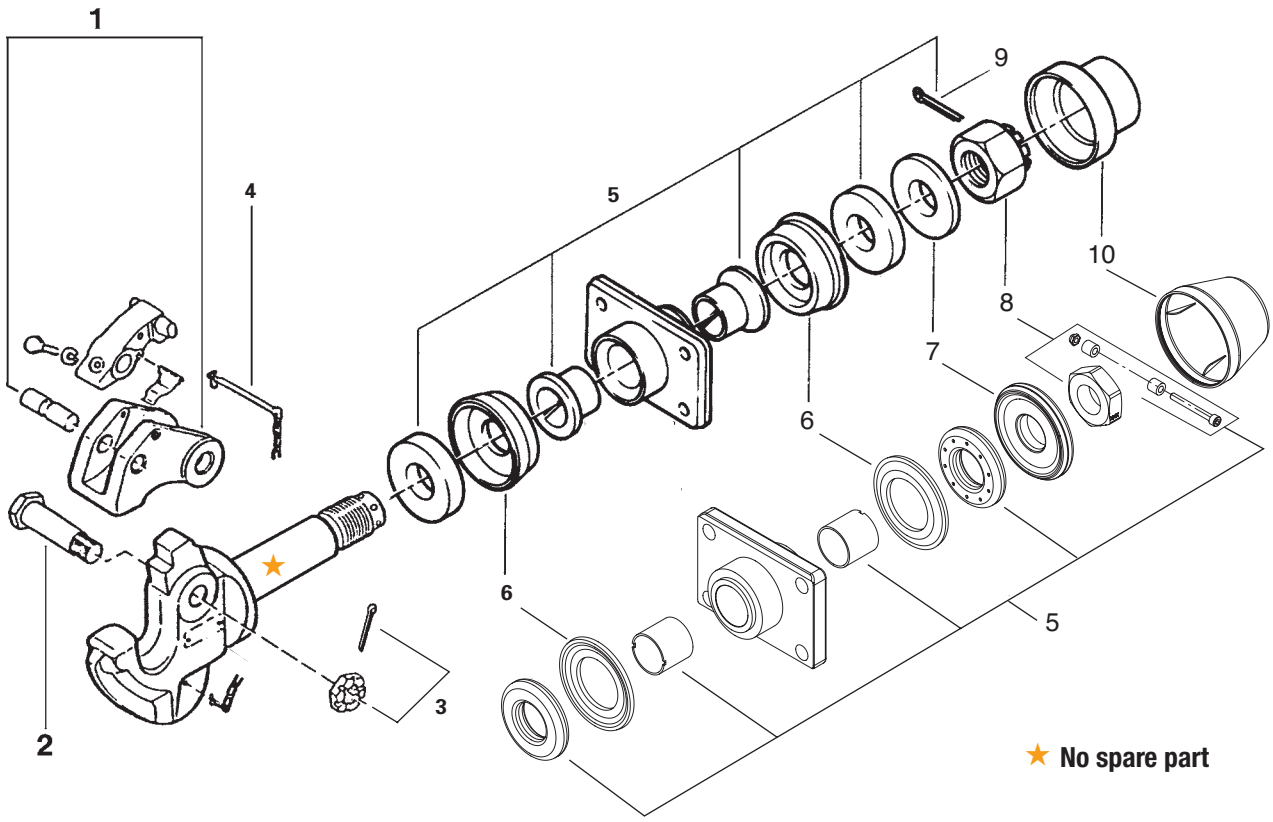

Fig.	Description	Part No
01	135, 145	R0E66393
01	150	R0E66324
01	283xxxxx2	R0E70932
02	135, 145	R0E52036
02	283xxxxx2	R0E52037
03		R0E56030
04	283A35xx1	R0E71606
04	283Axxxxx	R0E70285
05	135	R0E70343
05	283A45xx0	R0E70344

Fig.	Description	Part No
05	283A45/50xx2	R0E70344
06	135	R0E44060
06	145, 150	R0E44134
07	283A50xx2	R0E59280
08	283A45/50xx2	R0E71796
09	283xxxxx2	R0E30492
10	135	R0E56051
10	145, 150	R0E56049
10	283A45/50xx2	R0E25347

Series RO805B



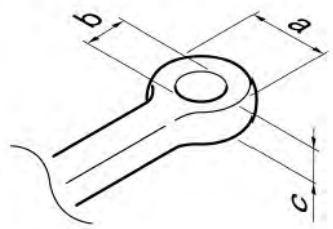

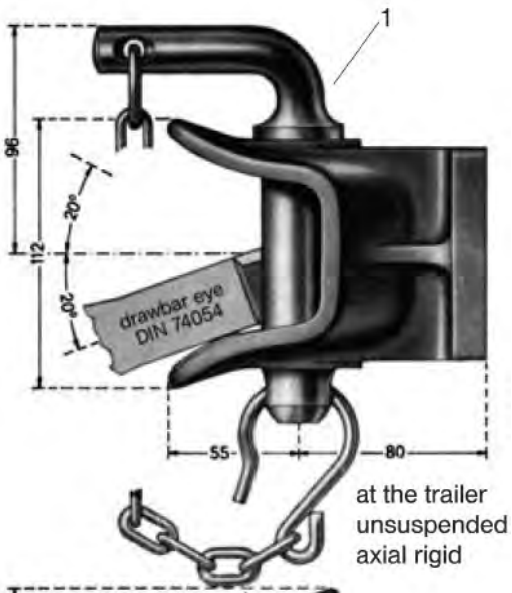

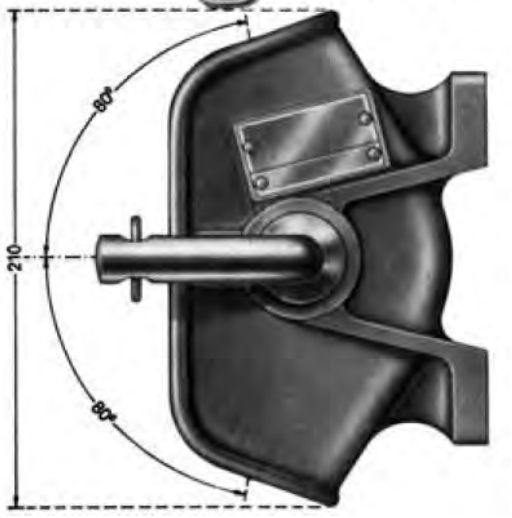

Technical data:

- Non-automatic trailer coupling with flange bearing hole pattern: 120mm × 55mm

Part no.	D[1] (kN)	S[2] (t)	ABG M
369U130	60,4	0,65	3455

[1] D-value
[2] Statical vertical load

- Usable on agricultural trailers only (R) (p.e. R^1 = 16t; R^2 = 10t)
- Admissible total weight of a vehicle combination of 40t

Usable drawbar eyes

	nominal dimensions			turn-angle (see fig.)	
DIN	a (mm)	b (mm)	c (mm)	horizontal	vertical
74054	100	40	30,5	min. 80°	min. 20°

Dimensions of the coupling

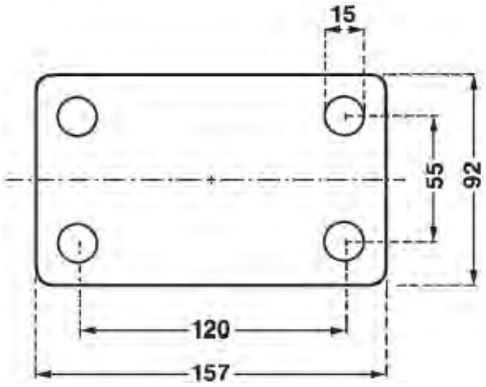

Spare parts for series RO*805B

no.	Designation	Piece	Part no.
1	Insert pin	1	R70323
	Type plate		Upon request

Capacity

Series RO244

Compact hitch for industrial trucks and trailers



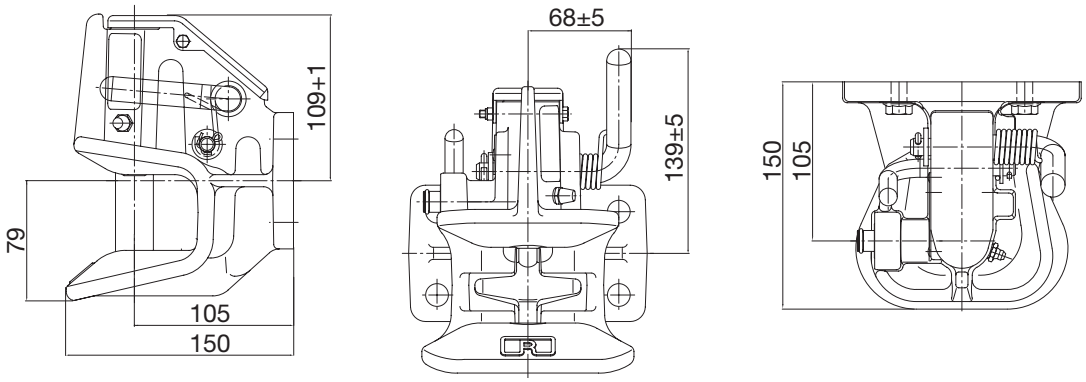

Technical data

Order no.	Size	Hole pattern (mm)	Admissible D-value[2] (kN)	Admissible Dc-value*(kN)	Admissible static vertical load[3] (kg)	Admissible V-value[2] (kN)	Weight (kg)	ECE
RO244A35002	135	120 x 55	42	30	250	8,4	6	011802

Size model	a (mm)	b (mm)	c (mm)	d (mm)	e (mm)
135	120	55	155	90	15

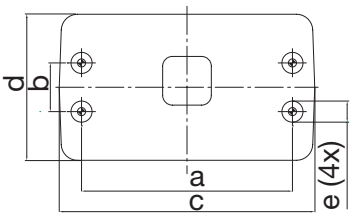

Choice of the coupling / calculation

Choice of the coupling

	tractor	bearing of the coupling
1.		flange bearing
2.1		lift bearing
2.2		insert pin bearing

1. Hole pattern at rear tractor:
coupling with flange bearing and corresponding hole pattern

2. Coupling holder of tractor
2.1 Coupling with lift bearing
2.2 Coupling with insert pin bearing

Calculation

1. total vehicle combination weight
Admissible total vehicle combination weight:
currently 40t.

2. towed load
In absence of D-value specification:
Admissible total vehicle combination weight (currently 40t) minus admissible total weight of tractor

3. D-value
D-value (not for all couplings)
Theoretical horizontal force between towing vehicle and trailer; comparative mathematical value of forces between moving masses.

The D-value can only be calculated with the permissible total weight of both truck and trailer.

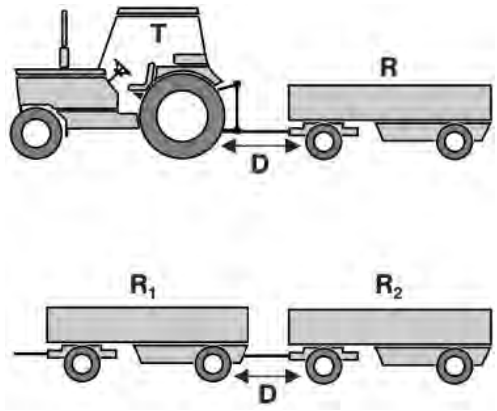

Calculation of the D-value (kN):

$$D = g \cdot \frac{T \cdot R}{T + R}$$

T : total weight of the towing vehicle in t
R : total weight of the turnable trailer in t
g : gravitation acceleration (9,81 m/s²)

The calculated D-value can be equal to or lower than the D-value

$$D = g \cdot \frac{R_1 \cdot R_2}{R_1 + R_2}$$

R1 : total weight of trailer where the coupling is mounted (in t)
R1 ≥ R2

3. Static verticle load

- vertical load of the central-axle trailer on the coupling point
- The vertical load depends on the size of the coupling and the maximum is 10% of the gross weight of the trailer or 1000kg (whichever is less).
- When using a central-axle trailer the vertical load should amount to at 4% of the trailer weight in order to increased wear caused by bouncing of the drawbar eye.
- Size of static vertical load is also a function of speed.

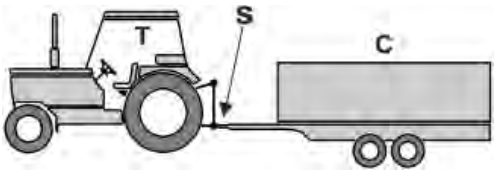

Central-axle trailer (C):
Use admissible in principle:

- size of central-axle trailer depends on characteristics of drawbar eye and tractor unit
- please see table for restrictions

Choice of the coupling / calculation

Drawbar eye

Couplings and drawbar eyes for the road traffic which have been verified according to european standard specification 94/20 have special fixed identying sizes, the Dc-value and the V-value, for the operation with the central-axle trailer.

These values are not of importance in the agriculture and forestry. Since the Dc-value and the V-value are indicated with some of the following mentioned drawbar eyes, these sizes are briefly explained.

Towing vehicle and central-axle trailer
Dc-value

(valid only in connection with the V-value)

- theoretical horizontal force between towing vehicle and trailer.
- The Dc-value can only be calculated with the permissible total weight of both towing vehicle and central-axle trailer.

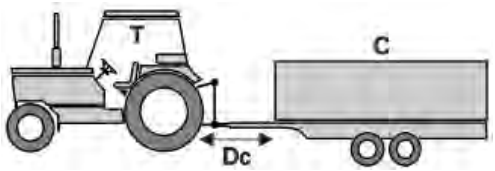

- Calculation of the Dc-value (kN):

$$D\,(kN) = g \cdot \frac{T \cdot C}{T + C}$$

T : total weight of the towing vehicle in t
C : sum of the axle loads of the central-axle trailer.
g : gravitation acceleration 9,81 m/s²

The calculated Dc-value can be **equal to or lower than** the Dc-value of the drawbar eye.

Central-axle trailer:
V-value

(valid only in connection with the Dc-value)

- vertical force for central-axle trailer.
- dependent on the **rear axle suspension of the towing vehicle**

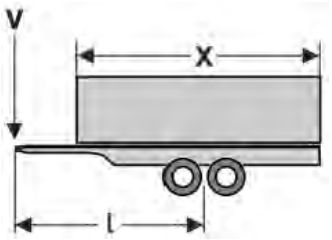

- Calculation of the V-value (kN):

$$V\,(kN) = a \cdot \frac{x_2}{l_2} \cdot C$$

a : an equivalent vertical acceleration in the coupling point in m/s²
a = 1,8 for vehicles with air suspension
a = 2,4 for vehicles with other suspensions l: theoretical drawbar length in meters
x : length of the loading area in meters x² / l²: atleast 1,0
C: sum of the axle loads of the central-axle trailer in t

The calculated V-value can be equal to or lower than the V-value of the drawbar eye.

Rigid mounted pintle hooks

BPCBH850MM (8 Ton)

Capacity
3,000 lbs. maximum vertical load
16,000 lbs. M.G.T.W.

Description
Drop forged combination pintle hook/ball hitch. Forged steel ball. Interchangeable hitch balls. Finished with black powder coat for durability and corrosion resistance.

Drawbar Eye Dimensions
2½" to 3" up to 1 9/16 cross section.
Hitches are shipped with drilling template, capacity decal, and are individually boxed.

Weight	13 lbs
CRN	37265



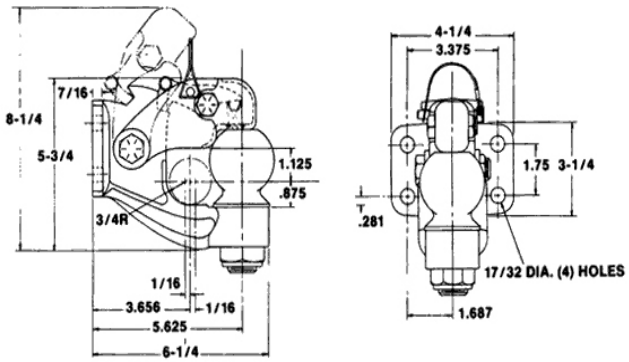

BPCP45AC4 & BPCPAC4BK (45 Ton) - BPCP45AC6 & BPCPAC6BK (45 Ton)

Buyers Pintle Hooks feature a “double-safe” locking system with a lock/ clasp/impact arm interacting design that combine to prevent release of the eye when air pressure is applied. The Air Compensated Pintle Hooks must be used with a brake chamber.

The air brake chamber is constructed to interact with the closed clasp to prevent uncoupling when air is applied.

P45AC4 is to be used with a lunette eye having an internal diameter between 2⅜" and 3", and a material cross section between 1¼" and 1¾" in diameter.

P45AC6 is to be used with a lunette eye having an internal diameter between 2⅜" and 2⅝", and a material cross section between 1⅝" and 1¾" in diameter.

Weight: BPC P 45 AC4	26lbs
Weight: BPC P 45 AC4BK	3.2lbs
CRN	37266



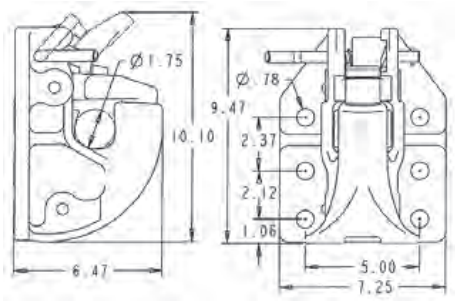

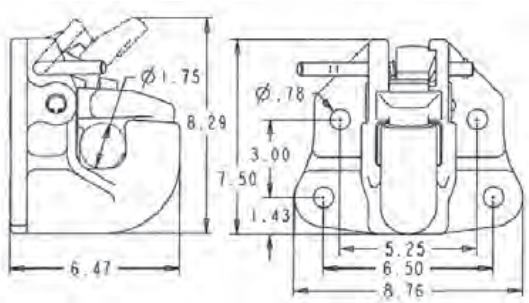

Rigid mounted pintle hooks

BPCPH15WMK (15 Ton)

Capacity
6,000 lbs. maximum vertical load
30,000 lbs. M.G.T.W.

Description
Drop forged alloy steel rigid type pintle hook.
Finished with black powder coat for superior durability and corrosion resistance.

Drawbar Eye Dimensions
2" to 3" I.D. with 1¼" to 1⅝" diameter section.
Pintle hooks are individually boxed and include mounting information sheet, spec. sheet, adhesive backed drilling template, and vehicle capacity decal.

Weight	11.75lbs
CRN	37267



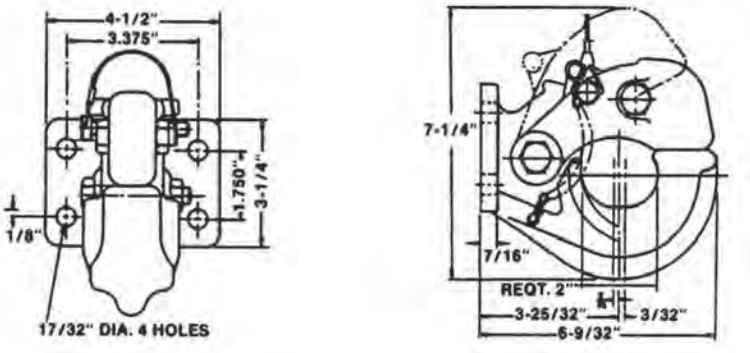

BPCPH20WMK (20 Ton)

Capacity
8,000 lbs. maximum vertical load
40,000 lbs. M.G.T.W.

Description
Drop forged alloy steel rigid type pintle hook.
Finished with black powder coat for superior durability and corrosion resistance.

Drawbar Eye Dimensions
2" to 3" I.D. with 1¼" to 1⅝" diameter section.
Pintle hooks are individually boxed and include mounting instructions, specifications sheet, adhesive backed drilling template, and vehicle capacity decal.

Weight	13.3lbs
CRN	37268



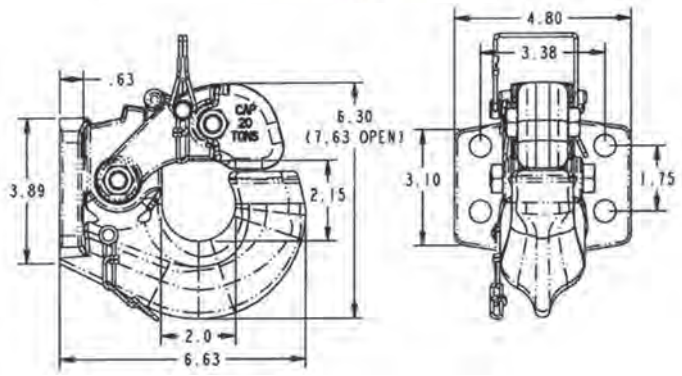

Rigid mounted pintle hooks

BPCPH30 (Ton)

Capacity
15,000 lbs. maximum vertical load
60,000 lbs. M.G.T.W.

Description
Drop forged alloy steel rigid type pintle hook.
Designed for ease of use, long life and corrosion resistance.

Drawbar Eye Dimensions
2" to 3" I.D. with 1¼" to 1⅝" diameter section.
Pintle hooks are individually boxed and include mounting instructions, specification sheet, adhesive backed drilling template and vehicle capacity decal.

Weight	24lbs
CRN	44894



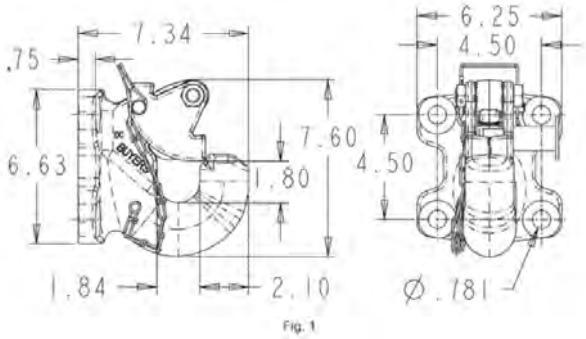

Fig. 1

BPCPH50AC

Capacity
20,000 lbs. maximum vertical load
100,000 lbs. M.G.T.W.

Description
50 Ton air compensated pintle hook reduces wear and absorbs shock in heavy duty towing situation.

Drawbar Eye Dimensions
2.38" to 3" I.D. with 1¼" to 1⅝" diameter section.
Pintle hooks are individually boxed and include mounting instructions, specification sheet, adhesive backed drilling template, and vehicle capacity decal.

Weight	44.8lbs
CRN	45107



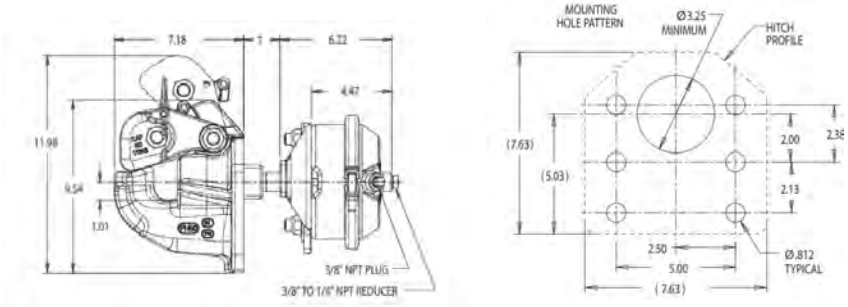

Pintle Hook Mount

Part Number: BPCPM87

Capacity:
2800lb: maximum vertical load
14000lb :M.G.T.W.

Description:
Pintle Hook 8 hole mount

Weight:
15lb

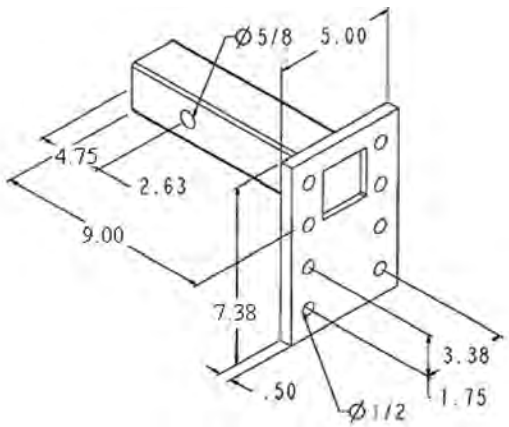



Part Number: BPCPM84

Capacity:
4000lb: maximum vertical load
20000lb :M.G.T.W.

Description:
Pintle Hook 4 hole mount

Weight:
12lb



Hubodometer and Hub Caps



Hubodometer for all tyres sizes

JOST HUBODOMETER is a precision instrument for all kinds of wheeled vehicles, e.g. semi-trailers trailers low-bed trailers buses trains and other equipment.

JOST HUBODOMETER will record information for maintenance schedules wear and tear controls mileage of leasing vehicles exact data for calculation of transport costs validating guarantees



Smallest dimension
Overall depth only 23 mm

Mounting
Directly to the wheel cap or shockproof mounting in a special wheel cap

Recording mechanism
Completely and permanently sealed. Filled with inert gas against fogging and ingress of moisture or dirt. Records forward and reverse motion. Completely tamperproof.

Records up to one million miles. Records in kilometres or miles. All parts corrosion resistant.

Weight: 0.24 kg

3 Year or 500,000kms warranty, whichever comes first.

When ordering please state:

1. exact tyre size resp. circumference
2. calibration for kilometres or miles.

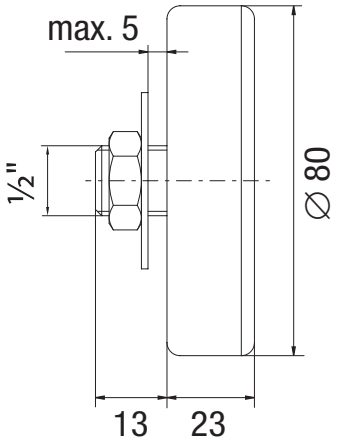

Circumference	Tyre Size	JOST Part Number
2915mm	275.70-22.5 11.70-22.5	J2915MM
3175-3220mm	10.00-20 11.00-22.5 14.80-22.5 295.80-22.5 315.75-22.5 375.70-20 405.70-20	J10/00/20

The right to alter specifications is reserved

Mounting instructions for Hubodometer

When mounting the hubodometer to your existing hub-cap proceed as follows:

Check whether there is enough clearance to the end of the axle, at least 6 mm clearance is required after mounting. The contact surface of the hub-cap must be flat, if necessary by machining. Drill the concentric 13 mm mounting hole. Install the hubodometer with the spring washer and nut supplied.

Torque the nut to 15Nm (1,5mkp) maximum, just sufficient to flatten the spring washer.

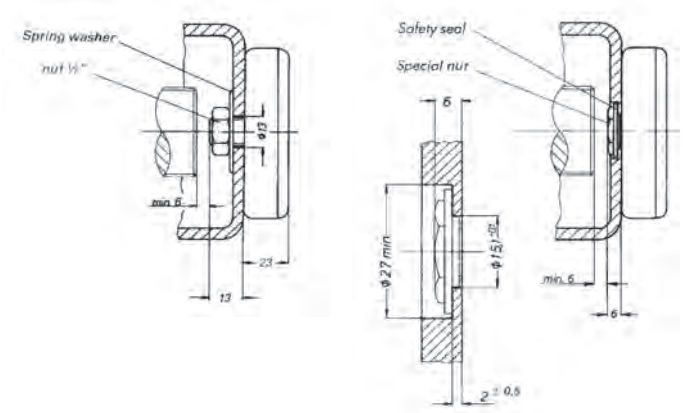

Hubodometer - short version

Where fitting has to take place in a restricted space this type of Hubodometer is used. It has a shortened clamping bolt. Fitting is effected using a special plain nut and a combined sealing/retaining ring. Tightening torque max. 15 Nm (1,5 mkp).

Fixing and centring in the axle cap requires a concentric hole of 15,1 mm diameter. With axle caps of more than 2 mm wall thickness the nut should be counterbored.

Important

The Hubodometer must be fitted concentrically. Oscillations due to running out of true will impair life and accuracy. Check that the permissible vehicle width is not exceeded when the Hubodometer is fitted. No chemical agents should be used when cleaning the Hubodometer.

The right to alter specifications is reserved

JOST Alloy Wheels



JOST Forged Alloy Wheels

JOST Premium Forged Alloy Wheels are manufactured to exacting standards to suit Australian conditions.

- Half the weight of steel rims*
- Reduced tyre wear
- Strong and durable
- Increased fuel economy
- Reduced brake maintenance
- 5 year unlimited km warranty
- Available in Machined, Polished and Superchrome™ finishes
- Available for steel wheel conversions including sleeve nuts

* average weight statement compared to a quality 22.5x8.25 Steel disc wheel equivalent.

Part No.	Description	SIZE	offset (mm)	PCD HOLES	P.C.D (mm)	Stud (mm)	C.B (mm)	MAX LOAD	WEIGHT (kg)
JW 117528526P OE	JOST WHEEL POLISHED 11.75 X 22.5. 285 PCD 26 BOLT	22.5x11.75	120	10	285	26	220	5000KG	25.6
JW 1175285SS26P OE	JOST WHEEL POLISHED 11.75 X 22.5 SUPER SINGLE 285 PCD 26 BOLT	22.5x11.75	0	10	285	26	220	5000KG	25
JW 117533526M OE	JOST WHEEL MACHINED 11.75 X 22.5.335 PCD 26 BOLT	22.5x11.75	120	10	335	26	281.2	5000KG	24.5
JW 117533526P OE	JOST WHEEL POLISHED 11.75 X 22.5.335 PCD 26 BOLT	22.5x11.75	120	10	335	26	281.2	5000KG	24.5
JW 117533526SC	JOST WHEEL SUPERCHROMED 11.75 X 22.5 335 PCD 26 BOLT	22.5x11.75	120	10	335	26	281.2	5000KG	24.9
JW 117533532M OE	JOST WHEEL MACHINED 11.75 X 22.5.335 PCD 32 BOLT	22.5x11.75	120	10	335	32	281.2	5000KG	24.5
JW 117533532P OE	JOST WHEEL POLISHED 11.75 X 22.5.335 PCD 32 BOLT 10 STUD	22.5x11.75	120	10	335	32	281.2	5000KG	24.5
JW 117533532SC	JOST WHEEL SUPERCHROMED 11.75 X 22.5 335 PCD 32 BOLT 10 STUD	22.5x11.75	120	10	335	32	281.2	5000KG	24.9
JW 17567526IP OE	JOST WHEELINSIDE POLISH 17.5 X 6.75 225 PCD 26 BOLT 10 STUD	17.5X675	120	10	225	26	176	2500KG	14.2
JW 17567526M OE	JOST WHEEL MACHINED 17.5 X 6.75 225 PCD 26 BOLT 10 STUD	17.5X6.75	120	10	225	26	176	2500KG	14.2
JW 17567526SC	JOST WHEEL SUPERCHROME 17.5 X 6.75 225 PCD 26 BOLT 10 STUD	17.5X6.75	120	10	225	26	176	2500KG	14.7
JW 19527526M OE	JOST WHEEL MACHINED 19.5 X 7.5 275 PCD 26 BOLT 8 STUD	19.5X7.5	134	8	275	26	221	3000KG	17
JW 19527526IP OE	JOST WHEEL INSIDE POLISHED 19.5 X 7.5 275 PCD 26 BOLT 8 STUD	19.5X7.5	134	8	275	26	221	3000KG	17.3
JW 82528526IP OE	JOST WHEEL INSIDE POLISH 22.5 X 8.25 285 PCD 26 BOLT 10 STUD	22.5x8.25	143.5	10	285	26	220	3360KG	23.6
JW 82528526M OE	JOST WHEEL MACHINED 8.25 X 22.5 285 PCD 26 BOLT 10 STUD	22.5x8.25	143.5	10	285	26	220	3360KG	23.6
JW 82528526P OE	JOST WHEEL POLISHED 8.25 X 22.5 285 PCD 26 BOLT 10 STUD	22.5x8.25	143.5	10	285	26	220	3360KG	23.6
JW 82528526SC	JOST WHEEL SUPERCHROMED 8.25 X 22.5 285 PCD 26 BOLT 10 STUD	22.5x8.25	143.5	10	285	26	220	3360KG	24
JW 82528526SC Steer	JOST WHEEL SUPERCHROME STEER 8.25 X 22.5 285 PCD 26 10 STUD	22.5x8.25	143.5	10	285	26	220	3360KG	24
JW 82533526IP OE	JOST WHEEL INSIDE POLISH 8.25 X 22.5 335 PCD 26 BOLT 10 STUD	22.5x8.25	145	10	335	26	281.2	3650KG	23.9
JW 82533526M OE	JOST WHEEL MACHINED 8.25 X 22.5.335 PCD 26 BOLT 10 STUD	22.5x8.25	145	10	335	26	281.2	3650KG	23.9
JW 82533526P OE	JOST WHEEL POLISHED 8.25 X 22.5. 335 PCD 26 BOLT 10 STUD	22.5x8.25	145	10	335	26	281.2	3650KG	23.9
JW 82533526SC	JOST WHEEL SUPERCHROME 8.25 X 22.5. 335 PCD 26 BOLT 10 STUD	22.5x8.25	145	10	335	26	281.2	3650KG	24.3
JW 82533526SC Steer	JOST WHEEL SUPERCHROME STEER 8.25 X 22.5 335 PCD 26 BOLT 10 STUD	22.5x8.25	145	10	335	26	281.2	3650KG	24.3
JW 82533532IP OE	JOST WHEEL INSIDE POLISHED 8.25 X 22.5 335 PCD 32 BOLT 10 STUD	22.5x8.25	145	10	335	32	281.2	3650KG	23.6
JW 82533532M OE	JOST WHEEL MACHINED 8.25 X 22.5 335 PCD 32 BOLT 10 STUD	22.5x8.25	145	10	335	32	281.2	3650KG	23.6
JW 82533532P OE	JOST WHEEL POLISHED 8.25 X 22.5 335 PCD 32 BOLT 10 STUD	22.5x8.25	145	10	335	32	281.2	3650KG	23.6
JW 82533532SC	JOST WHEEL SUPERCHROME 8.25 X 22.5 X 335 PCD 32 BOLT 10 STUD	22.5x8.25	145	10	335	32	281.2	3650KG	24.1
JW82528532SC Steer	JOST WHEEL SUPERCHROME STEER 8.25 X 22.5 X 335 PCD 32 BOLT 10 STUD	22.5x8.25	143.5	10	335	32	281.2	3650KG	24.1
JW 900285106P OE	JOST WHEEL POLISHED 9.00 X 22.5 285 PCD 106 INSET 10 STUD	22.5x9.0	79	10	285	26	220.1	5000KG	23.6
JW 900335106P OE	JOST WHEEL POLISHED 9.00 X 22.5 335 PCD 106 INSET 10 STUD	22.5x9.0	79	10	335	26	281.2	5000KG	23.6
JW 900335106SC	JOST WHEEL SUPECHROME 9.00 X 22.5 335 PCD 106 INSET 10 STUD	22.5 X9.0	79	10	335	26	281.2	5000KG	24.1
JW 900285106SC	JOST WHEEL SUPECHROME 9.00 X 22.5 285 PCD 106 INSET 10 STUD	22.5x9.0	79	10	285	26	220.1	5000KG	24.1
JW 90028526M OE	JOST WHEEL MACHINED 9.00 x 22.5 285 PCD 26 BOLT 10 STUD	22.5x9.0	152.2	10	285	26	220.1	4125KG	28.2
JW 90028526P OE	JOST WHEEL POLISHED 9.00 x 22.5 285 PCD 26 BOLT 10 STUD	22.5x9.0	152.2	10	285	26	220.1	4125KG	28.2
JW 90028526SC	JOST WHEEL SUPERCHROME 9.00 x 22.5 285 PCD 26 BOLT 10 STUD	22.5x9.0	152.2	10	285	26	220.1	4125KG	28.6
JW 90028526SC Steer	JOST WHEEL SUPERCHROME STEER 9.00 x 22.5 285 PCD 26 BOLT 10 STUD	22.5x9.0	152.2	10	285	26	220.1	4125KG	28.6
JW 90033526M OE	JOST WHEEL MACHINED 9.00 X 22.5 335 PCD 26 BOLT 10 STUD	22.5x9.0	152.2	10	335	26	281.2	4125KG	26.7
JW 90033526P OE	JOST WHEEL POLISHED 9.00 X 22.5 335 PCD 26 BOLT10 STUD	22.5x9.0	152.2	10	335	26	281.2	4125KG	26.7
JW 90033526SC	JOST WHEEL SUPERCHROME 9.00 X 22.5 335 PCD 26 BOLT 10 STUD	22.5x9.0	152.2	10	335	26	281.2	4125KG	27.1
JW 90033526SC Steer	JOST WHEEL SUPERCHROME STEER 9.00 X 22.5 335 PCD 26 BOLT 10 STUD	22.5x9.0	152.2	10	335	26	281.2	4125KG	27
JW 90033532M OE	JOST WHEEL MACHINED 9.00 X 22.5 335 PCD 32 BOLT 10 STUD	22.5x9.0	152.2	10	335	32	281.2	4125KG	26.7
JW 90033532P OE	JOST WHEEL POLISHED 9.00 X 22.5 335 PCD 32 BOLT 10 STUD	22.5x9.0	152.2	10	335	32	281.2	4125KG	26.7
JW 90033532SC	JOST WHEEL SUPERCHROME 9.00 X 22.5.335 PCD 32 BOLT 10 STUD	22.5x9.0	152.2	10	335	32	281.2	4125KG	27
JW 90033532SC Steer	JOST WHEEL SUPERCHROME STEER 9.00 X 22.5.335 PCD 32 BOLT 10 STUD	22.5x9.0	152.2	10	335	32	281.2	4125KG	27
JW SLEEVE SINGLE 32MM	SLEEVE NUT M22 X 1.5 MM 32MM HEX CAST STEEL STEER USE								
JW SLEEVE TWIN 32MM	SLEEVE NUT M22 X 1.5 MM 32MM HEX CAST STEEL DRIVE USE								
JW LUG NUT 32 MM	LUG NUT FOR WHEELS M22 X 1.5 32 MM HEX CAST STEEL.								
JW LUG NUT 33 MM	LUG NUT FOR WHEELS M22 X 1.5 33 MM HEX CAST STEEL.								
JW LUG NUT COVER 33 MM	LUG NUT COVER 33 MM STEEL AND CHROME.								
JW NUT COVER 33MM	33MM LUG NUT COVERS								
JW RIM GAUGE	JOST RIM GAUGE FLANGE WEAR INDICATOR								
JW SCANIA SLEEVE SINGLE	SLEEVE NUT 33MM HEX 7/8 X 11 BSF THREAD STEER USE								
JW SCANIA SLEEVE TWIN	SLEEVE NUT 33MM HEX 7/8 X 11 BSF THREAD DRIVE USE								

Refer to the JOST website www.jostaustralia.com.au for the full wheel catalogue.

JOST Hydraulic Solutions



Hydraulic Cylinders

The extensive range of JOST tipping cylinders has been designed for the Australian market and are currently available in 3, 4 and 5 stage and stroke lengths ranging from 2760mm to 8675mm

- All stage hard chroming
- Large stage overlap creating market leading strength & stability
- Heavy Duty Forged double welded Trunnion
- Spherical seal and bearing design
- Full lifting capacity at industry standard 135bar operating pressure
- Full 2 year warranty backed by JOST Australia nationwide support

Refer to the JOST website www.jostaustralia.com.au for the full Hydraulic catalogue.

Service Tools

Tools To Make Your Job Easier

- Jost Australia offer a selection of tools and gauges to make your job easier.
- Including simple 'No-Go' gauges in addition to rated lifting tools and fifth wheel testers.
- All tools are designed for common ADR specified wear limits as well as JOST specific tolerances.
- Tools to suit king pins, locking jaws, coupling pins, tow eye bushes, ball couplings and more.

Fig.	Description	Part No.
1	Lock jaw gauge to suit 36, 37, 42	JOSTGAUGELOCKJAW
2	Skid plate gauge to suit 50mm king pin	JOSTGAUGESKIDPLATE50MM
2a	Skid plate gauge to suit 90mm king pin	JOSTGAUGESKIDPLATE90MM
3	Tow eye gauge	JOSTGAUGEGNIM150
4	King pin Gauge	JOSTGAUGEKINGPIN
5	RO500 gauge	JOSTGAUGERO500
6	50mm king pin lock tester	SK7600000
6a	90mm king pin lock tester	SK7600090



1.



4.



2.



5.



3.

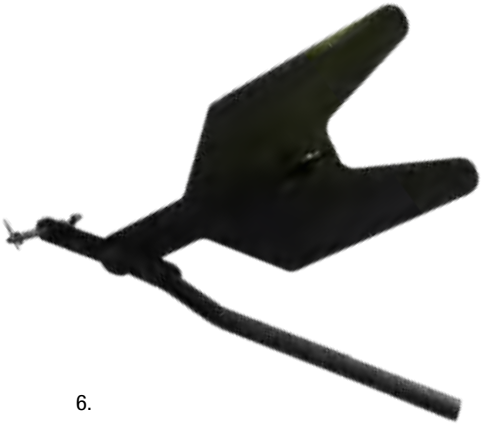

6.