MITSUBISHI MATERIALS

PSC Holders

FOR MULTI-TASKING MACHINES AND CNC LATHES





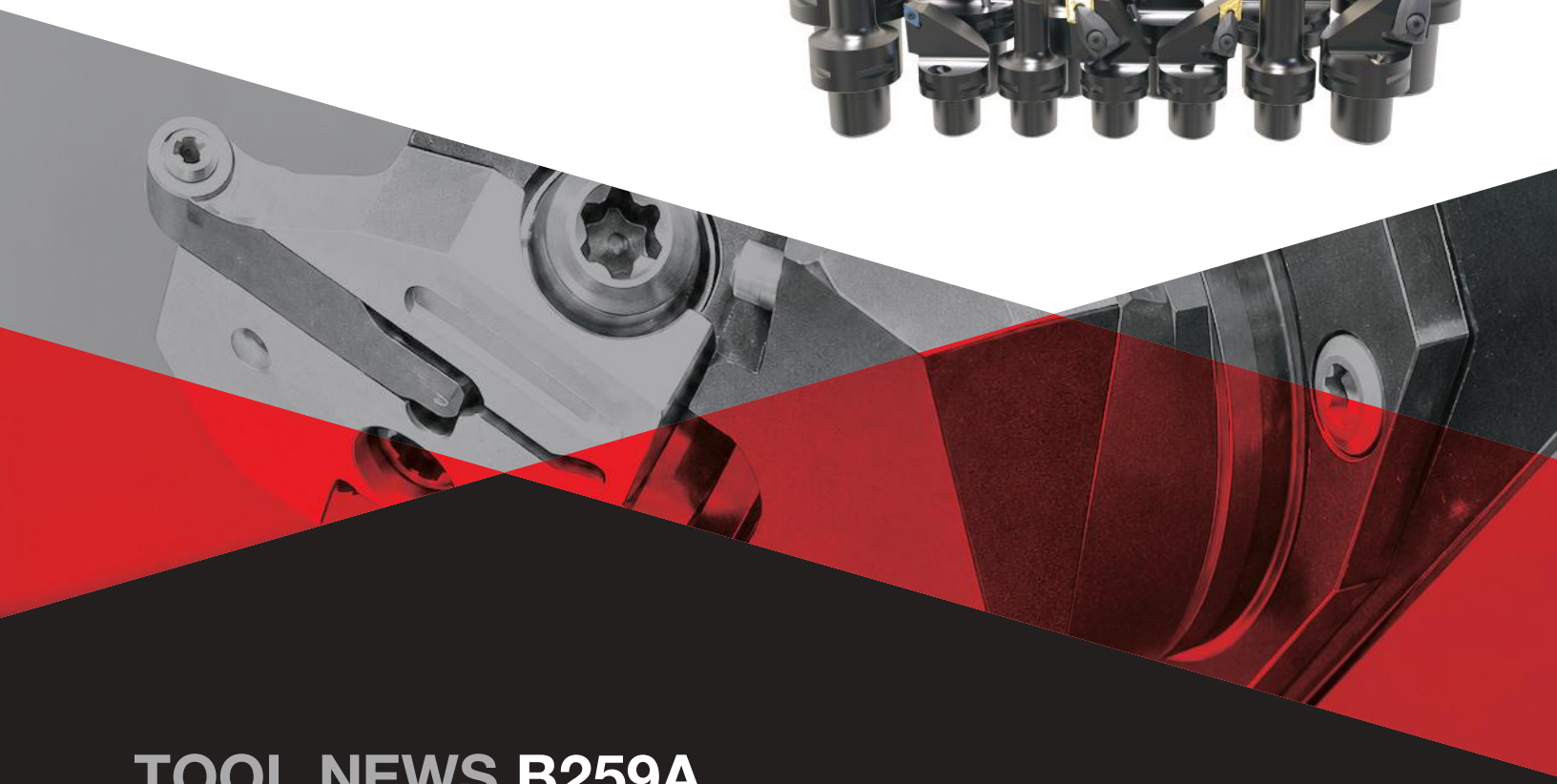

TOOL NEWS **B259A**

Features of the **PSC** Holders

The dual-face contact polygon taper shank (PSC) provides high clamping rigidity through a combination of a high-rigidity, high precision taper and face contact. It also offers excellent repeatability during tool changes, enabling easy and reliable tool replacement.

NEW

ISO Series

***Equipped with coolant nozzles or coolant thru**
(Recommended Max. Coolant Pressure: 580 PSI)

Compatible with a wide range of ISO inserts

To support high-efficiency machining on multi-tasking machines, 12 machining types have been standardized using ISO inserts: negative C, D, T, V, W and positive C, D, T, V.

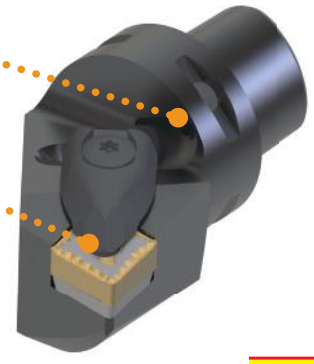

NEW

MMT Series

***Equipped with coolant nozzles or coolant thru**
(Recommended Max. Coolant Pressure: 580 PSI)

Wide Coverage of Thread Standards

Supports a wide variety of thread standards, including those for general machinery, pipe connections, mechanical drive applications, aerospace, and gas piping.
More than 250 items have been standardized using PVD-coated grades to achieve stable and reliable threading performance.



GY Series

***Equipped with a coolant nozzle**
(Recommended Max. Coolant Pressure: 580 PSI)

Over 100 Types of Modular Blades

From a lineup of over 100 modular blade types, users can select blades for external turning, face grooving, and undercutting, with up to three different grooving depths. By choosing the optimal blade width and grooving depth, machining issues such as chatter and vibration can be effectively prevented.



*For details of the coolant system, please refer to the specification tables.

Cutting Performance

Comparison of Finished Surfaces during Cross-feed Machining of 1045 Carbon Steel

The GY series uses modular blades with short overhang exhibiting excellent rigidity, especially during cross-feed machining.

	GY PSC Max. Groove Depth .236 in						**GY PSC** Max. Groove Depth .472 in			Conventional Max. Groove Depth .787 in		
Depth of Cut (in)	.039			.059			.039			.039		
Feed (IPR)	.012	.010	.008	.012	.010	.008	.012	.010	.008	.012	.010	.008
Machined Surface	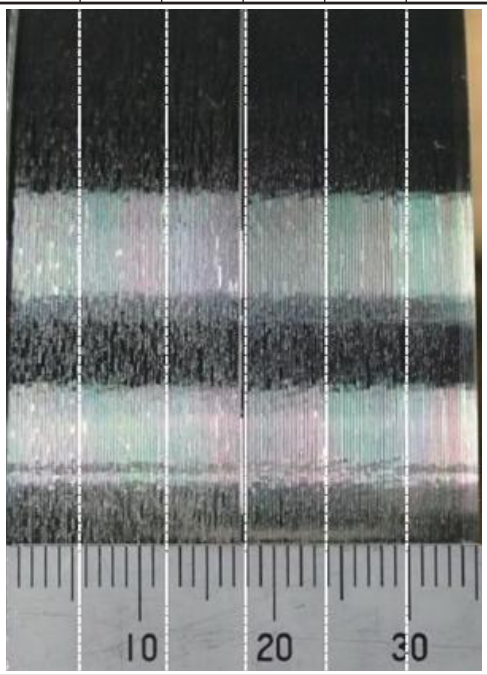									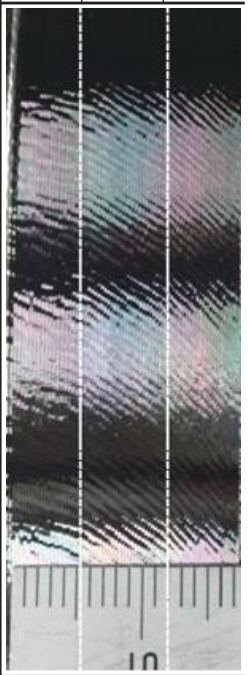		
Finished Surface Evaluation	OK	OK	OK	OK	OK	OK	OK	OK	OK	NG	NG	NG
Machining Sound	OK	OK	OK	OK	OK	OK	OK	OK	OK	NG	NG	NG

NG - Displays chatter and vibration

<Cutting Conditions>
Material : AISI 1045 ø5.906 in
Cutting Width : .118 in
Cutting Speed : vc = 590 SFM
Cutting Mode : Cross-feed Machining
External Coolant 145 PSI

PSC Holder Order Number

ISO Series

①Mounting Size	
C3	PSC30
C4	PSC40
C5	PSC50
C6	PSC63

③Insert Geometry	
C	RHOMBIC 80°
D	RHOMBIC 55°
T	TRIANGULAR
V	RHOMBIC 35°
W	TRIGON 80°

⑤Insert Clearance	
B	5°POSITIVE
C	7°POSITIVE
N	NEGATIVE

⑦WF Dimension	
00	0 mm
11	11 mm
13	13 mm
18	18 mm
22	22 mm
27	27 mm
35	35 mm
45	45 mm

⑨Symbol for Insert Size										
Inch		Metric								
Size	Thickness	CC	CN	DC	DN	TC	TN	VB	VN	WN
2	1.5			0702		1102				
3	2.5	09T3		11T3						
3	3		0904		1104		1604	1604	1604	0604
4	3		1204		1504					0804
4	4				1506					
5	4		1606							

①	②	③	④	⑤	⑥	⑦	⑧	⑨	⑩
C5	– D	D	J	N	R	35	– 060	1504	C/CA

②Clamp Structure	
D	Double Clamp
S	Screw-on

④Cutting Angle	
F	91°
J	93°
L	95°
M	95°
N	62.5°
Q	107.5°
U	93°

⑥Hand	
R	Right Hand
L	Left Hand
N	Neutral

⑧Functional Length (LF)			
040	40 mm	070	70 mm
045	45 mm	075	75 mm
050	50 mm	080	80 mm
055	55 mm	090	90 mm
060	60 mm	105	105 mm
062	62 mm	115	115 mm
065	65 mm		

⑩With Coolant Thru

MMT Series

EXTERNAL

①	②	③	④	⑤	⑥	⑦	⑧	⑨	⑩
C6	– MMT	E	R	33	M	16	A	A	– Z

①Mounting Size	
C3	PSC30
C4	PSC40
C5	PSC50
C6	PSC63

②Designation

③Application	
E	External

④Hand	
R	Right Hand

⑤Insert Height (S10)

⑥Overall Length	
M	Medium

⑦Inscribed Circle	
11	6.35 mm
16	9.525 mm
22	12.7 mm

⑧Holder Offset*	
A	With
B	Without

* Offset based on DCONMS

⑨Position of Coolant Thru	
A	Rake Face
B	Rake Face +Flank Face

⑩Standard / Inverted holder	
Z	Inverted holder

INTERNAL

①	②	③	④	⑤	⑥	⑦	⑧	⑨	⑩
C4	– MMT	I	R	25	M	16	A	P15	– Z

①Mounting Size	
C3	PSC30
C4	PSC40
C5	PSC50
C6	PSC63

②Designation

③Application	
I	Internal

④Hand	
R	Right Hand

⑤Min.Cutting Diameter

⑥Overall Length	
M	Medium

⑦Inscribed Circle	
11	6.35 mm
16	9.525 mm
22	12.7 mm

⑧Position of Coolant Thru	
A	Rake Face
B	Rake Face +Flank Face

⑨Lead Angle (No Shim)	
P15	1.5°

⑩Standard / Inverted holder	
Z	Inverted holder

GY Series

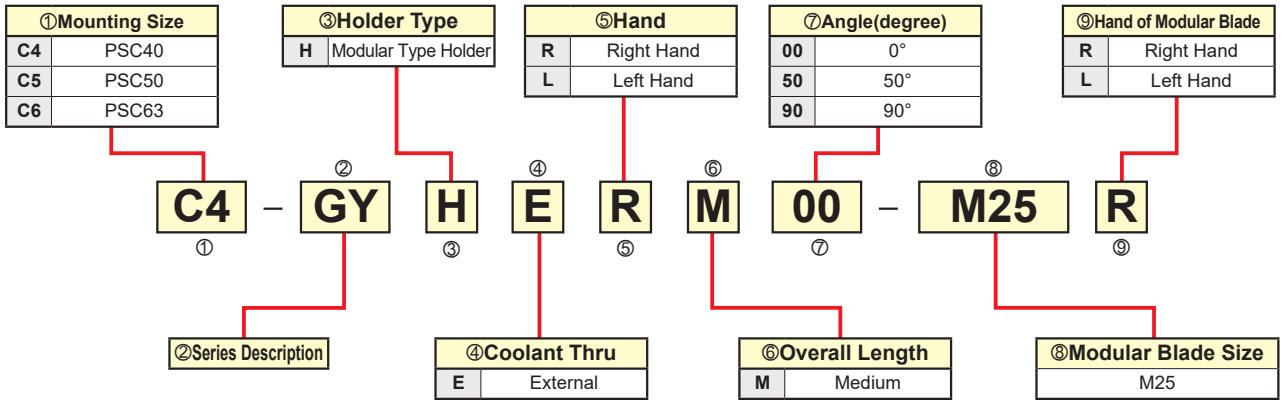

GY Series LIG Dimension Tolerance Conversion Table

The setting dimensions LF and LH shown on the next pages will change depending on the installed insert. The standard published dimensions assume GM chipbreakers for a cutting edge angle of 00° 90°, and BM chipbreakers for 50°.

Cutting Width *1 **CW**	Dimensions **LIG**	*2 Dimensional tolerance versus standard dimension (LIG) of each chipbreaker							
		GU	**GS/GM**	**MS/MM**	**R/L-GM**	Flat Top	**MF**	**BM**	**GL**
.079", 2.00 mm	.815", 20.7 mm	0	0	0	.004	0	.014	.008	.014
.088", 2.24 mm	*3 (.815", 20.7 mm)						.014		
.094", 2.39 mm	.815", 20.7 mm	0	0			0	.014		
.098", 2.50 mm	.815", 20.7 mm	0	0	0	.005	0	.014	.008	.014
.108", 2.74 mm	*3 (.815", 20.7 mm)						.014		
.118", 3.00 mm	.815", 20.7 mm	0	0	0	.006	0	.014	.008	.014
.125", 3.18 mm	.815", 20.7 mm	0	0			0	.014	.008	
.128", 3.24 mm	*3 (.815", 20.7 mm)						.014		
.157", 4.00 mm	1.010", 25.65 mm	0	0	0	.008	0	.012	.006	
.167", 4.24 mm	*3 (1.010", 25.65 mm)						.012		
.187", 4.75 mm	1.010", 25.65 mm	0	0			0	.012	.006	
.197", 5.00 mm	1.010", 25.65 mm	0	0	0	.012	0	.012	.006	
.206", 5.24 mm	*3 (1.010", 25.65 mm)						.012		
.236", 6.00 mm	1.010", 25.65 mm	0	0	0		0	.012	.010	
.248", 6.31 mm	*3 (1.010", 25.65 mm)						.012		
.250", 6.35 mm	1.010", 25.65 mm	0	0				.012	.010	

*1 This value is used at the described holder dimension.
*2 ■ when there is no applicable chipbreaker.
*3 The standard dimensions shown here use an approximate insert width.

ISO PSC HOLDERS NEW

PSC_DCLN_A External Turning, Facing DOUBLE CLAMP Type CN○○Inserts

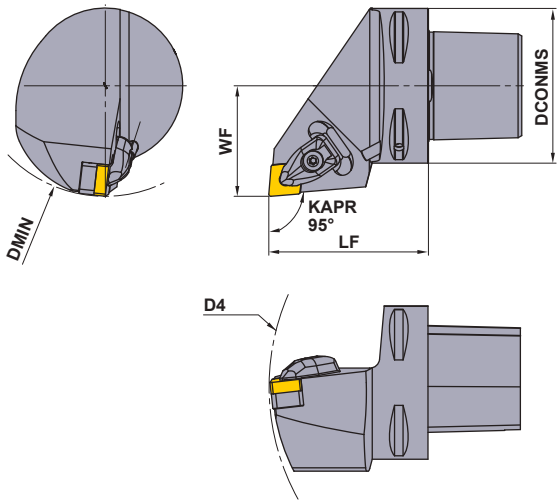

Right-hand tool holder shown.

Order Number	Stock		Insert Number		Dimensions (mm)					WT (kg)
	R	L			DCONMS	LF	WF	DMIN	D4	
C3-DCLNR-22045-12-C	★		CN○A CN○G CN○M	43	32	45	22.0	60	121	0.2
C3-DCLNL-22045-12-C		★		43	32	45	22.0	60	121	0.2
C4-DCLNR-27050-09-C	★			33	40	50	27.0	60	140	0.4
C4-DCLNL-27050-09-C		★		33	40	50	27.0	60	140	0.4
C4-DCLNR-27050-12-C	★			43	40	50	27.0	110	140	0.4
C4-DCLNL-27050-12-C		★		43	40	50	27.0	110	140	0.4
C5-DCLNR-35060-12-C	★			43	50	60	35.0	110	165	0.7
C5-DCLNL-35060-12-C		★		43	50	60	35.0	110	165	0.7
C6-DCLNR-45065-12-C	★			43	63	65	45.0	110	190	1.3
C6-DCLNL-45065-12-C		★		43	63	65	45.0	110	190	1.2
C6-DCLNR-45065-16-C*	★			54	63	65	45.0	125	190	1.3
C6-DCLNL-45065-16-C*		★		54	63	65	45.0	125	190	1.3

★ = NEW

* Cannot be fitted to the Yamazaki Mazak INTEGREX i, j, e series.

Spare Parts

Holder Type					
	Shim	Shim Screw	Clamp Set*	Clamp Torque (lbf-in)	Nozzle
C3-DCLNR/L-22045-12	A110003	A130015	A120012	34.5	—
C4-DCLNR/L-27050-09	A110004	A130017	A120011	15.0	NZ44200-X
C4-DCLNR/L-27050-12	A110001	A130015	A120012	34.5	NZ44200-X
C5-DCLNR/L-35060-12	A110001	A130015	A120012	34.5	NZ44200-X
C6-DCLNR/L-45065-12	A110001	A130015	A120012	34.5	NZ44200-X
C6-DCLNR/L-45065-16	A110002	A130018	A120013	56.6	NZ44200-X

* Clamp Set: Sold as a set of Clamp Bridge, Spring, and Clamp Screw.

Holder Type		
	Wrench (Insert) (Sold Separately)	Wrench (Shim) (Sold Separately)
C3-DCLNR/L-22045-12	TKY15F	TIP15W
C4-DCLNR/L-27050-09	Torx Size 9*	Torx Plus Size 9*
C4-DCLNR/L-27050-12	TKY15F	TIP15W
C5-DCLNR/L-35060-12	TKY15F	TIP15W
C6-DCLNR/L-45065-12	TKY15F	TIP15W
C6-DCLNR/L-45065-16	TKY20F	TIP20F-X

* Not supplied. Please use a commercially available wrench. **★ : Stocked in Japan**

PSC_DCMN_A External Turning, Facing DOUBLE CLAMP Type CN○○Inserts

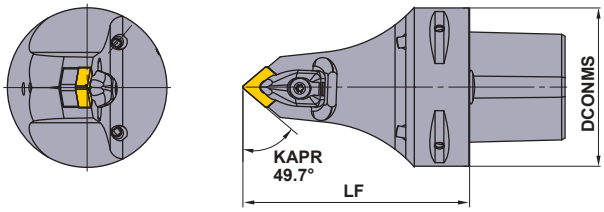

Order Number	Stock		Insert Number		Dimensions (mm)		WT (kg)
	N				DCONMS	LF	
C5-DCMNN-00105-12-C	★		CN○A CN○G CN○M	43	50	105	1.1
C6-DCMNN-00090-12-C	★			43	63	90	1.3
C6-DCMNN-00115-12-C	★			43	63	115	1.7

★ = NEW

Spare Parts

Holder Type					
	Shim	Shim Screw	Clamp set*	Clamp Torque (lbf-in)	Nozzle
C5-DCMNN-00105-12	A110001	A130015	A120012	34.5	NZ29048100S
C6-DCMNN-00○○○-12	A110001	A130015	A120012	34.5	NZ35050120S-X

* Clamp Set: Sold as a set of Clamp Bridge, Spring, and Clamp Screw.

Holder Type			
	Wrench (Insert) (Sold Separately)	Wrench (Shim) (Sold Separately)	Nozzle Exchange Key (Sold Separately)
C5-DCMNN-00105-12	TKY15F	TIP15W	NZKH050SL
C6-DCMNN-○○○○○-12	TKY15F	TIP15W	NZKH050SX-X

ISO PSC HOLDERS NEW

PSC_DDJN_A External Turning, Facing DOUBLE CLAMP Type DN○○Inserts

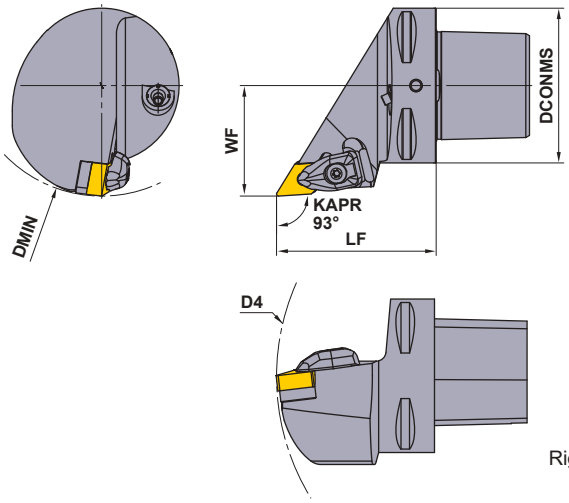

Right-hand tool holder shown.

Order Number	Stock		Insert Number *		Dimensions (mm)					WT (kg)
	R	L			DCONMS	LF	WF	DMIN	D4	
C3-DDJNR-22045-11-C	★		DN○A DN○G DN○M DN○X	33	32	45	22.0	80	121	0.2
C3-DDJNL-22045-11-C		★		33	32	45	22.0	80	121	0.2
C4-DDJNR-27050-11-C	★			33	40	50	27.0	80	140	0.3
C4-DDJNL-27050-11-C		★		33	40	50	27.0	80	140	0.4
C4-DDJNR-27055-1504C	★			43 (44)	40	55	27.0	110	145	0.4
C4-DDJNL-27055-1504C		★		43 (44)	40	55	27.0	110	145	0.4
C4-DDJNR-27055-15-C	★			44 (43)	40	55	27.0	110	145	0.4
C4-DDJNL-27055-15-C		★		44 (43)	40	55	27.0	110	145	0.4
C5-DDJNR-35060-1504C	★			43 (44)	50	60	35.0	110	165	0.7
C5-DDJNL-35060-1504C		★		43 (44)	50	60	35.0	110	165	0.6
C5-DDJNR-35060-15-C	★			44 (43)	50	60	35.0	110	165	0.7
C5-DDJNL-35060-15-C		★		44 (43)	50	60	35.0	110	165	0.7
C6-DDJNR-45065-1504C	★			43 (44)	63	65	45.0	110	190	1.2
C6-DDJNL-45065-1504C		★		43 (44)	63	65	45.0	110	190	1.1
C6-DDJNR-45065-15-C**	★			44 (43)	63	65	45.0	110	190	1.1
C6-DDJNL-45065-15-C**		★		44 (43)	63	65	45.0	110	190	1.1

★ = NEW

* Changing to the shim compatible with the symbols in parentheses allows the use of inserts with different thicknesses.

** Cannot be fitted to the Yamazaki Mazak INTEGREX i, j, e series.

★ : Stocked in Japan

Spare Parts

Holder Type					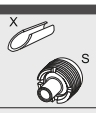
	Shim	Shim Screw	Clamp set*	Clamp Torque (lbf-in)	Nozzle
C3-DDJNR/L-22045-11	A110006	A130017	A120011	15.0	—
C4-DDJNR/L-27050-11	A110006	A130017	A120011	15.0	NZ22042080S
C4-DDJNR/L-27055-1504	A110033 (A110005)	A130015	A120012	34.5	NZ22042080S
C4-DDJNR/L-27055-15	A110005 (A110033)	A130015	A120012	34.5	NZ22042080S
C5-DDJNR/L-35060-1504	A110033 (A110005)	A130015	A120012	34.5	NZ44200-X
C5-DDJNR/L-35060-15	A110005 (A110033)	A130015	A120012	34.5	NZ44200-X
C6-DDJNR/L-45065-1504	A110033 (A110005)	A130015	A120012	34.5	NZ29048100S
C6-DDJNR/L-45065-15	A110005 (A110033)	A130015	A120012	34.5	NZ29048100S

* Clamp Set: Sold as a set of Clamp Bridge, Spring, and Clamp Screw.

Holder Type			
	Wrench (Insert) (Sold Separately)	Wrench (Shim) (Sold Separately)	Nozzle Exchange Key (Sold Separately)
C3-DDJNR/L-22045-11	Torx Size 9*	Torx Plus Size 9*	—
C4-DDJNR/L-27050-11	Torx Size 9*	Torx Plus Size 9*	NZKH050S
C4-DDJNR/L-27055-1504	TKY15F	TIP15W	NZKH050S
C4-DDJNR/L-27055-15	TKY15F	TIP15W	NZKH050S
C5-DDJNR/L-35060-1504	TKY15F	TIP15W	—
C5-DDJNR/L-35060-15	TKY15F	TIP15W	—
C6-DDJNR/L-45065-1504	TKY15F	TIP15W	NZKH050SL
C6-DDJNR/L-45065-15	TKY15F	TIP15W	NZKH050SL

* Not supplied. Please use a commercially available wrench.

ISO PSC HOLDERS NEW

PSC_DDNN_A External Turning, Facing DOUBLE CLAMP Type DN○○Inserts

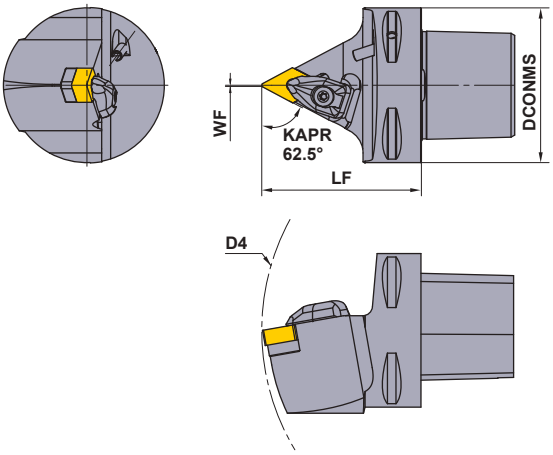

Order Number	Stock N		Insert Number *		Dimensions (mm) DCONMS	LF	WF	D4	WT (kg)
C5-DDNNN-00060-1504C	★		DN○A DN○G DN○M DN○X	43 (44)	50	60	0.5	165	0.6
C5-DDNNN-00060-15-C	★			44 (43)	50	60	0.5	165	0.6
C6-DDNNN-00065-1504C	★			43 (44)	63	65	0.5	190	0.9
C6-DDNNN-00065-15-C	★			44 (43)	63	65	0.5	190	0.9

★ = NEW

* Changing to the shim compatible with the symbols in parentheses allows the use of inserts with different thicknesses.

Spare Parts

Holder Type	Shim	Shim Screw	Clamp set*	Clamp Torque (lbf-in)	Nozzle
C5-DDNNN-00060-1504	A110033 (A110005)	A130015	A120012	34.5	NZ44200-X
C6-DDNNN-00065-1504	A110033 (A110005)	A130015	A120012	34.5	NZ29048100S
C○-DDNNN-0006○-15	A110005 (A110033)	A130015	A120012	34.5	NZ29048100S

* Clamp Set: Sold as a set of Clamp Bridge, Spring, and Clamp Screw.

Holder Type	Wrench (Insert) (Sold Separately)	Wrench (Shim) (Sold Separately)	Nozzle Exchange Key (Sold Separately)
C5-DDNNN-00060-1504	TKY15F	TIP15W	—
C6-DDNNN-00065-1504	TKY15F	TIP15W	NZKH050SL
C○-DDNNN-0006○-15	TKY15F	TIP15W	NZKH050SL

★ : Stocked in Japan

PSC_DVJN_A External Turning, Facing DOUBLE CLAMP Type VN○○Inserts

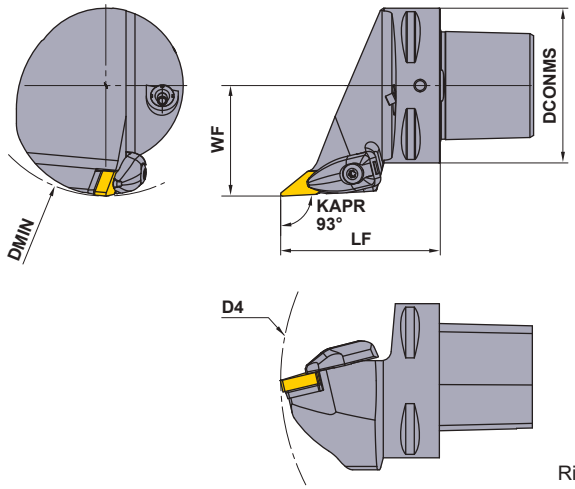

Right-hand tool holder shown.

Order Number	Stock		Insert Number		Dimensions (mm)					WT (kg)
	R	L			DCONMS	LF	WF	DMIN	D4	
C4-DVJNR-27062-16-CA	★		VN○A VN○G VN○M	33	40	62	27.0	110	152	0.4
C4-DVJNL-27062-16-CA		★		33	40	62	27.0	110	152	0.4
C5-DVJNR-35065-16-CA	★			33	50	65	35.0	110	170	0.6
C5-DVJNL-35065-16-CA		★		33	50	65	35.0	110	170	0.7
C6-DVJNR-45065-16-CA*	★			33	63	65	45.0	110	190	1.0
C6-DVJNL-45065-16-CA*		★		33	63	65	45.0	110	190	1.0

★ = NEW

* Cannot be fitted to the Yamazaki Mazak INTEGREX i, j, e series.

Spare Parts

Holder Type					
	Shim	Shim Screw	Clamp set*	Clamp Torque (lbf-in)	Nozzle
C4-DVJNR/L-27062-16	A110007	A130019	A120014	26.6	NZ22042080S
C5-DVJNR/L-35065-16	A110007	A130019	A120014	26.6	NZ29048100S
C6-DVJNR/L-45065-16	A110007	A130019	A120014	26.6	NZ29048100S

* Clamp Set: Sold as a set of Clamp Bridge, Spring, and Clamp Screw.

Holder Type			
	Wrench (Insert) (Sold Separately)	Wrench (Shim) (Sold Separately)	Nozzle Exchange Key (Sold Separately)
C4-DVJNR/L-27062-16	TKY15F	TIP15W	NZKH050S
C5-DVJNR/L-35065-16	TKY15F	TIP15W	NZKH050SL
C6-DVJNR/L-45065-16	TKY15F	TIP15W	NZKH050SL

ISO PSC HOLDERS NEW

PSC_DWLN_A External Turning, Facing DOUBLE CLAMP Type WN◌◌Inserts

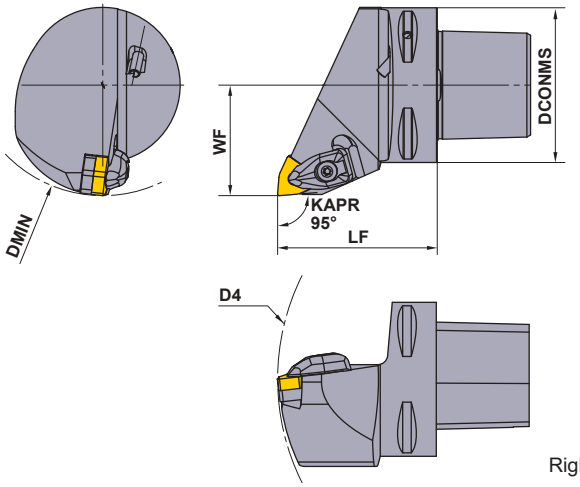

Right-hand tool holder shown.

Order Number	Stock		Insert Number		Dimensions (mm)					WT (kg)
	R	L			DCONMS	LF	WF	DMIN	D4	
C4-DWLNR-27050-06-C	★		WN◌A WNMG	33	40	50	27.0	60	140	0.4
C4-DWLNL-27050-06-C		★		33	40	50	27.0	60	140	0.4
C4-DWLNR-27050-08-C	★			43	40	50	27.0	110	140	0.4
C4-DWLNL-27050-08-C		★		43	40	50	27.0	110	140	0.4
C5-DWLNR-35060-08-C	★			43	50	60	35.0	110	165	0.7
C5-DWLNL-35060-08-C		★		43	50	60	35.0	110	165	0.7
C6-DWLNR-45065-08-C*	★			43	63	65	45.0	110	190	1.2
C6-DWLNL-45065-08-C*		★		43	63	65	45.0	110	190	1.3

★ = NEW

* Cannot be fitted to the Yamazaki Mazak INTEGREX i, j, e series.

Spare Parts

Holder Type					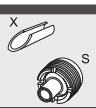
	Shim	Shim Screw	Clamp set*	Clamp Torque (lbf-in)	Nozzle
C4-DWLNR/L-27050-06	A110009	A130017	A120011	15.0	NZ22042080S
C4-DWLNR/L-27050-08	A110010	A130015	A120012	34.5	NZ22042080S
C5-DWLNR/L-35060-08	A110010	A130015	A120012	34.5	NZ44200-X
C6-DWLNR/L-45065-08	A110010	A130015	A120012	34.5	NZ44200-X

* Clamp Set: Sold as a set of Clamp Bridge, Spring, and Clamp Screw.

Holder Type			
	Wrench (Insert) (Sold Separately)	Wrench (Shim) (Sold Separately)	Nozzle Exchange Key (Sold Separately)
C4-DWLNR/L-27050-06	Torx Size 9*	Torx Plus Size 9*	NZKH050S
C4-DWLNR/L-27050-08	TKY15F	TIP15W	NZKH050S
C5-DWLNR/L-35060-08	TKY15F	TIP15W	—
C6-DWLNR/L-45065-08	TKY15F	TIP15W	—

* Not supplied. Please use a commercially available wrench.

★ : Stocked in Japan

PSC_DTJN_A

External Turning, Facing DOUBLE CLAMP Type

TN○○Inserts

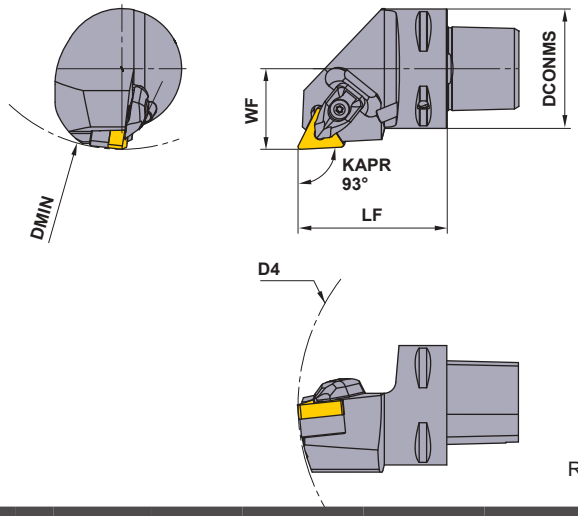

Right-hand tool holder shown.

Order Number	Stock		Insert Number		Dimensions (mm)					WT (kg)
	R	L			DCONMS	LF	WF	DMIN	D4	
C4-DTJNR-27050-16-C	★		TN○A TN○G TN○M	33	40	50	27.0	110	140	0.4
C4-DTJNL-27050-16-C		★		33	40	50	27.0	110	140	0.4

★ = NEW

Spare Parts

Holder Type					
	Shim	Shim Screw	Clamp set*	Clamp Torque (lbf-in)	Nozzle
C4-DTJNR/L	A110008	A130017	A120011	15.0	NZ44200-X

* Clamp Set: Sold as a set of Clamp Bridge, Spring, and Clamp Screw.

Holder Type		
	Wrench (Insert) (Sold Separately)	Wrench (Shim) (Sold Separately)
C4-DTJNR/L	Torx Size 9*	Torx Plus Size 9*

* Not supplied. Please use a commercially available wrench.

ISO PSC HOLDERS NEW

PSC_SCLC_A Boring Screw-on Type CC○○Inserts

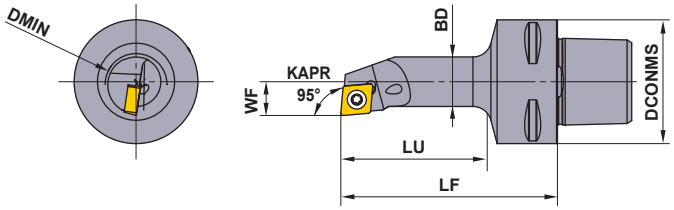

Right-hand tool holder shown.

Order Number	Stock		Insert Number		Dimensions (mm)						WT (kg)
	R	L			DCONMS	LF	LU	BD	WF	DMIN	
C3-SCLCR-11065-09-C	★		CC○B	32.5	32	65	48	16	10.9	20	0.2
C3-SCLCL-11065-09-C		★	CC○H	32.5	32	65	48	16	10.9	20	0.2
C4-SCLCR-11070-09-C	★		CC○T	32.5	40	70	47	16	10.9	20	0.3
C4-SCLCL-11070-09-C		★	CC○W	32.5	40	70	47	16	10.9	20	0.3

★ = NEW

Spare Parts

Holder Type	 Clamp Screw	Clamp Torque (lbf-in)
C○-SCLCR/L	A130019	26.6

Holder Type	 Wrench (Insert) (Sold Separately)
C○-SCLCR/L	TIP15W

★ : Stocked in Japan

PSC_SDJC_A Boring Screw-on Type DC○○Inserts

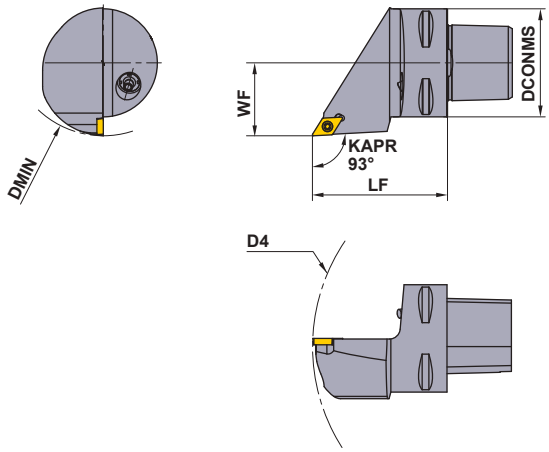

Right-hand tool holder shown.

Order Number	Stock		Insert Number		Dimensions (mm)					WT (kg)
	R				DCONMS	LF	WF	DMIN	D4	
C3-SDJCR-22040-07-C	★		DC○T	21.5	32	40	22.0	70	116	0.2
C4-SDJCR-27050-07-C	★		DC○W	21.5	40	50	27.0	70	140	0.3

★ = NEW

Spare Parts

Holder Type			
	Clamp Screw	Clamp Torque (lbf-in)	Nozzle
C○-SDJCR	A130016	8.0	NZ22042080S

Holder Type		
	Wrench (Insert) (Sold Separately)	Nozzle Exchange Key (Sold Separately)
C○-SDJCR	TIP07F	NZKH050S

ISO PSC HOLDERS NEW

PSC_SDUC_A Boring Screw-on Type DC○○Inserts

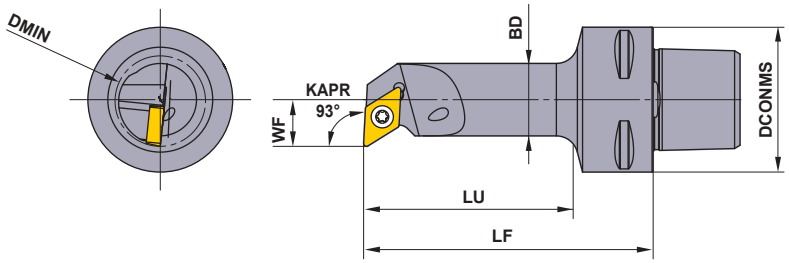

Right-hand tool holder shown.

Order Number	Stock		Insert Number		Dimensions (mm)						WT (kg)
	R	L			DCONMS	LF	LU	BD	WF	DMIN	
C3-SDUCR-13075-11-C	★		DC○T DC○W	32.5	32	75	58	20	12.9	25	0.2
C3-SDUCL-13075-11-C		★		32.5	32	75	58	20	12.9	25	0.2
C4-SDUCR-13080-11-C	★			32.5	40	80	57	20	12.9	25	0.4
C4-SDUCL-13080-11-C		★		32.5	40	80	57	20	12.9	25	0.4

★ = NEW

Spare Parts

Holder Type	 Clamp Screw	Clamp Torque (lbf-in)
C○-SDUCR/L	A130019	26.6

Holder Type	 Wrench (Insert) (Sold Separately)
C○-SDUCR/L	TIP15W

★ : Stocked in Japan

PSC_STFC_A Boring Screw-on Type TC○○Inserts

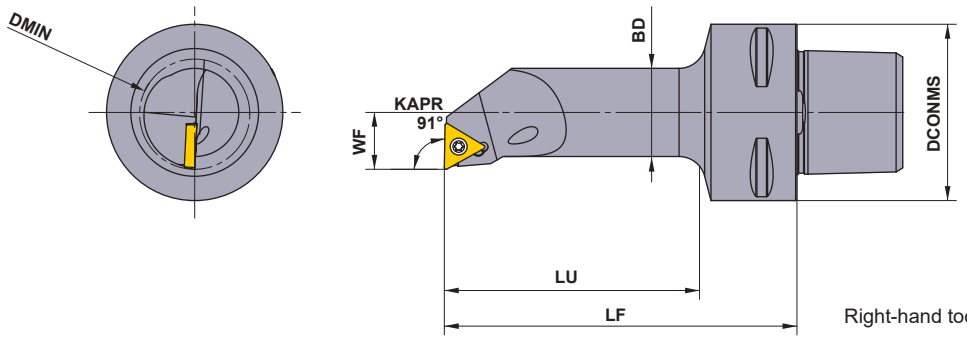

Right-hand tool holder shown.

Order Number	Stock		Insert Number		Dimensions (mm)						WT (kg)
	R	L			DCONMS	LF	LU	BD	WF	DMIN	
C4-STFCR-13080-11-C	★		TC○T	21.5	40	80	57	20	12.9	25	0.4
C4-STFCL-13080-11-C		★	TC○W	21.5	40	80	57	20	12.9	25	0.4

★ = NEW

PSC_SVQB_A Boring Screw-on Type VB○○Inserts

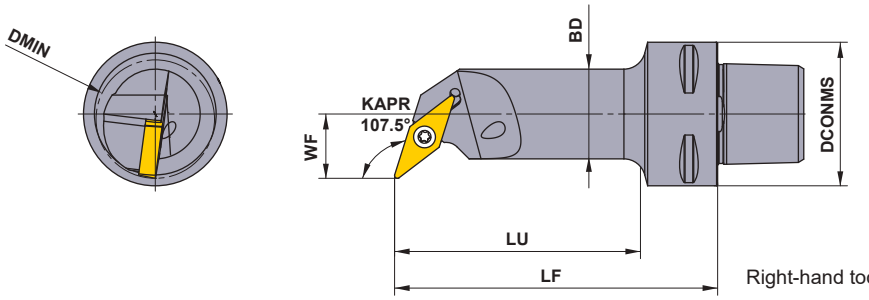

Right-hand tool holder shown.

Order Number	Stock		Insert Number		Dimensions (mm)						WT (kg)
	R	L			DCONMS	LF	LU	BD	WF	DMIN	
C4-SVQBR-18090-16-C	★		VB○T	33	40	90	68	25	17.9	33	0.4
C4-SVQBL-18090-16-C		★	VBGW	33	40	90	68	25	17.9	33	0.4

★ = NEW

Spare Parts

Holder Type			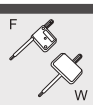
	Clamp Screw	Clamp Torque (lbf-in)	Wrench (Insert) (Sold Separately)
C4-STFCR/L	A130016	8.0	TIP07F
C4-SVQBR/L	A130020	26.6	TIP15W

Memo

MMT PSC HOLDERS NEW

PSC_MMTE_A2 External Threading with Shim — MMTE○○Inserts

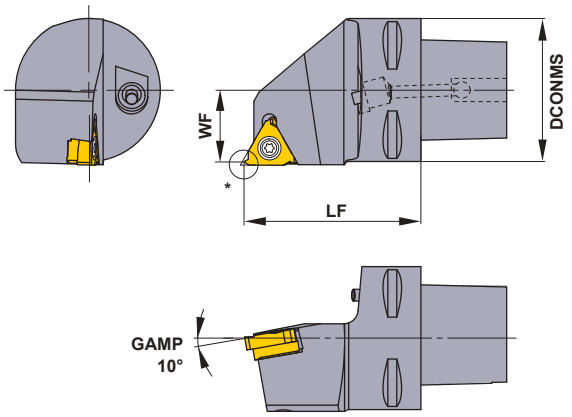

Inverted Holder

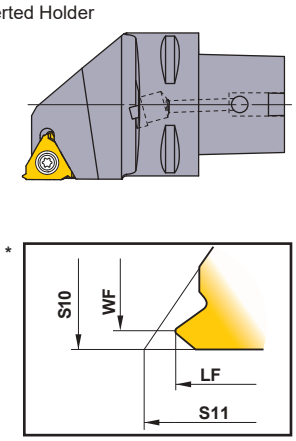

Right-hand tool holder shown.

Order Number	Stock R		Insert Number	Dimensions (mm) DCONMS	LF	S11	WF	S10	WT (kg)
C3-MMTER17M16AA	○		MMT16E	32	39.774	40	16.298	17	0.2
C4-MMTER21M16AA	○			40	49.774	50	20.298	21	0.4
C4-MMTER21M16AA-Z*	○			40	49.774	50	20.298	21	0.4
C5-MMTER26M16AA	○			50	59.774	60	25.298	26	0.8
C5-MMTER26M16AA-Z*	○			50	59.774	60	25.298	26	0.8
C6-MMTER33M16AA	○			63	64.774	65	32.298	33	1.3
C6-MMTER33M16AA-Z*	○			63	64.774	65	32.298	33	1.3
C3-MMTER17M22AA	○		MMT22E	32	38.905	40	14.705	17	0.2
C4-MMTER21M22AA	○			40	48.905	50	18.705	21	0.4
C4-MMTER21M22AA-Z*	○			40	48.905	50	18.705	21	0.4
C5-MMTER26M22AA	○			50	58.905	60	23.705	26	0.7
C5-MMTER26M22AA-Z*	○			50	58.905	60	23.705	26	0.7
C6-MMTER33M22AA	○			63	63.905	65	30.705	33	1.3
C6-MMTER33M22AA-Z*	○			63	63.905	65	30.705	33	1.3

* Inverted Holder

Note 1) Standard shim delivered with the holder. Select and use a shim as shown below (sold separately), dependent on the lead angle.

Note 2) The indicated dimensions apply when MMT16ER100ISO-S or MMT22ER400ISO M is used. If other insert geometries are used then LF and WF values may vary.

Spare Parts

Holder Type	Shim	Shim Screw	Clamp Screw	Clamp Torque (lbf-in)	Nozzle	Wrench (Insert)	Wrench (Shim)
C3-MMTER17M16	WSTE32T	WCS5030073H	TPS31	31.0	NZ22042080S	TIP10W	HKY30R
C4-MMTER21M16	WSTE32T	WCS5030073H	TPS31	31.0	NZ22042080S	TIP10W	HKY30R
C5-MMTER26M16	WSTE32T	WCS5030073H	TPS31	31.0	NZ29048100S	TIP10W	HKY30R
C6-MMTER33M16	WSTE32T	WCS5030073H	TPS31	31.0	NZ29048100S	TIP10W	HKY30R
C3-MMTER17M22	WSTE43T	WCS6040089H	TPS40F2B1	31.0	NZ22042080S	TIP15W	HKY40R
C4-MMTER21M22	WSTE43T	WCS6040089H	TPS40F2B1	31.0	NZ22042080S	TIP15W	HKY40R
C5-MMTER26M22	WSTE43T	WCS6040089H	TPS40F2B1	31.0	NZ29048100S	TIP15W	HKY40R
C6-MMTER33M22	WSTE43T	WCS6040089H	TPS40F2B1	31.0	NZ29048100S	TIP15W	HKY40R

SHIM

Lead Angle (α°)	Order Number	Stock R	Inclination Angle (θ°)	Applicable Holder
−1.5°	**WSTE32TN15**	○	−3°	C○-MMTER○○M16AA
−0.5°	**WSTE32TN05**	○	−2°	
0.5°	**WSTE32TP05**	○	−1°	
1.5°	**WSTE32TP15**	○	0°	
2.5°	**WSTE32TP25**	○	1°	C○-MMTER○○M16AA-Z
3.5°	**WSTE32TP35**	○	2°	
4.5°	**WSTE32TP45**	○	3°	

Lead Angle (α°)	Order Number	Stock R	Inclination Angle (θ°)	Applicable Holder
−1.5°	**WSTE43TN15**	○	−3°	C○-MMTER○○M22AA
−0.5°	**WSTE43TN05**	○	−2°	
0.5°	**WSTE43TP05**	○	−1°	
1.5°	**WSTE43TP15**	○	0°	
2.5°	**WSTE43TP25**	○	1°	C○-MMTER○○M22AA-Z
3.5°	**WSTE43TP35**	○	2°	
4.5°	**WSTE43TP45**	○	3°	

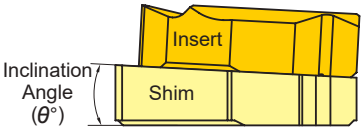

Standard shim delivered with the holder.

★ : Stocked in Japan ○ : Available in Spring 2027.

MMT PSC HOLDERS NEW

PSC_MMTI_A2 Internal Threading with Shim MMTI○○Inserts

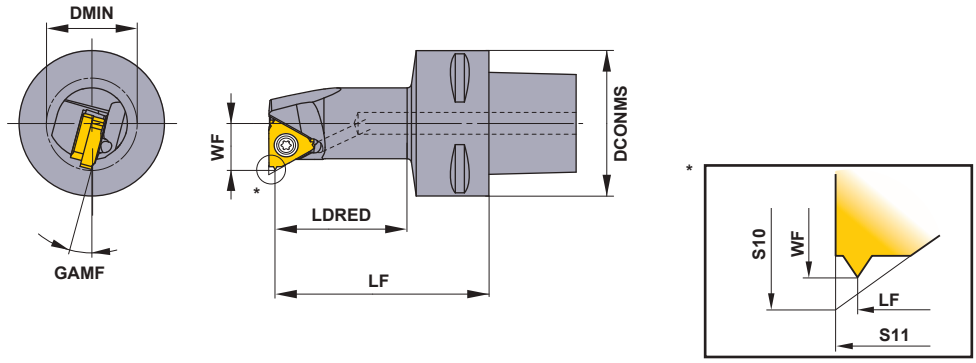

Right-hand tool holder shown.

Order Number	Stock R		Insert Number	Dimensions (mm) DCONMS	LF	S11	LDRED	WF	S10	DMIN	WT (kg)
C3-MMTIR25M16A	○		MMT16I	32	59.799	60	44	13.366	14	25	0.2
C4-MMTIR25M16A	○			40	59.799	60	38	13.366	14	25	0.4
C5-MMTIR25M16A	○			50	59.799	60	36	13.366	14	25	0.6
C6-MMTIR25M16A	○			63	69.799	70	42	13.366	14	25	1.1
C4-MMTIR32M16A	○			40	69.799	70	48	16.366	17	32	0.5
C5-MMTIR32M16A	○			50	69.799	70	47	16.366	17	32	0.7
C6-MMTIR32M16A	○			63	74.799	75	48	16.366	17	32	1.2
C4-MMTIR40M16A	○			40	89.799	90	69	21.366	22	40	0.7
C5-MMTIR40M16A	○			50	89.799	90	68	21.366	22	40	0.9
C6-MMTIR40M16A	○			63	89.799	90	64	21.366	22	40	1.3
C5-MMTIR50M16A	○			50	104.799	105	84	26.366	27	50	1.2
C6-MMTIR50M16A	○			63	104.799	105	80	26.366	27	50	1.6
C4-MMTIR32M22A	○		MMT22I	40	68.209	70	48	17.432	19	32	0.5
C5-MMTIR32M22A	○			50	68.209	70	47	17.432	19	32	0.7
C6-MMTIR32M22A	○			63	73.209	75	48	17.432	19	32	1.2
C4-MMTIR40M22A	○			40	88.209	90	69	20.432	22	40	0.7
C5-MMTIR40M22A	○			50	88.209	90	68	20.432	22	40	0.9
C6-MMTIR40M22A	○			63	88.209	90	64	20.432	22	40	1.3
C4-MMTIR50M22A	○			40	78.209	80	60	25.432	27	50	0.7
C5-MMTIR50M22A	○			50	103.209	105	84	25.432	27	50	1.2
C6-MMTIR50M22A	○			63	103.209	105	80	25.432	27	50	1.6

Note 1) Standard shim delivered with the holder. Select and use a shim as shown below (sold separately), dependent on the lead angle.
Note 2) The indicated dimensions apply when MMT1MMT16IR100ISO-S or MMT22IR400ISO is used. If other insert geometries are used then LF and WF values may vary.

Spare Parts

Holder Type	Shim	Shim Screw	Clamp Screw	Clamp Torque (lbf-in)	Wrench (Insert)	Wrench (Shim)
C○-MMIR○○M16	WSTI32T	WCS5030073H	TPS31	31.0	TIP10W	HKY30R
C○-MMIR○○M22	WSTI43T	WCS6040089H	TPS40F2B1	31.0	TIP15W	HKY40R

SHIM

Lead Angle (α°)	Order Number	Stock R	Inclination Angle (θ°)	Applicable Holder
−1.5°	**WSTI32TN15**	○	−3°	C○-MMTIR ○○M16AA
−0.5°	**WSTI32TN05**	○	−2°	
0.5°	**WSTI32TP05**	○	−1°	
1.5°	**WSTI32TP15**	○	0°	
2.5°	**WSTI32TP25**	○	1°	C○-MMTIR ○○M16AA-Z
3.5°	**WSTI32TP35**	○	2°	
4.5°	**WSTI32TP45**	○	3°	

Lead Angle (α°)	Order Number	Stock R	Inclination Angle (θ°)	Applicable Holder
−1.5°	**WSTI43TN15**	○	−3°	C○-MMTIR ○○M22AA
−0.5°	**WSTI43TN05**	○	−2°	
0.5°	**WSTI43TP05**	○	−1°	
1.5°	**WSTI43TP15**	○	0°	
2.5°	**WSTI43TP25**	○	1°	C○-MMTIR ○○M22AA-Z
3.5°	**WSTI43TP35**	○	2°	
4.5°	**WSTI43TP45**	○	3°	

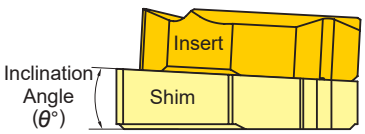

Standard shim delivered with the holder.

★ : **Stocked in Japan** ○ : **Available in Spring 2027.**

PSC_MMTI_A1 Internal Threading without Shim

MMTI○○Inserts

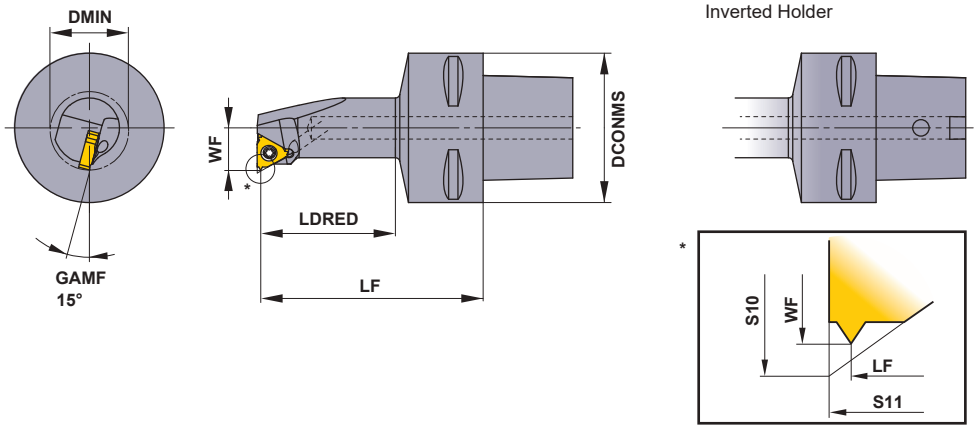

Right-hand tool holder shown.

Order Number	Stock R		Insert Number	Lead Angle	Dimensions (mm) DCONMS	LF	S11	LDRED	WF	S10	DMIN	WT (kg)
C3-MMTIR21M11AP15	★		MMT11I	1.5°	32	49.779	50	33	11.496	12.1	21	0.2
C3-MMTIR21M11AP15-Z*	★			1.5°	32	49.779	50	33	11.496	12.1	21	0.2
C4-MMTIR21M11AP15	★			1.5°	40	59.779	60	37	11.496	12.1	21	0.4
C4-MMTIR21M11AP15-Z*	★			1.5°	40	59.779	60	37	11.496	12.1	21	0.4
C3-MMTIR21M16AP15	★		MMT16I	1.5°	32	49.799	50	33	11.666	12.3	21	0.2
C4-MMTIR21M16AP15	★			1.5°	40	59.799	60	37	11.666	12.3	21	0.4
C5-MMTIR21M16AP15	★			1.5°	50	59.799	60	35	11.666	12.3	21	0.6
C4-MMTIR25M22AP15	★		MMT22I	1.5°	40	63.209	65	42	13.832	15.4	25	0.4
C5-MMTIR25M22AP15	★			1.5°	50	63.209	65	41	13.832	15.4	25	0.6

★ = NEW

* Inverted Holder

Note 1) A shim cannot be set in the holder. The holder body has a fixed lead angle of 15°.

Note 2) The indicated dimensions apply when MMT16IR100ISO-S or MMT22IR400ISO is used. If other insert geometries are used then LF, WF and LDRED values may vary.

Note 3) Min. Cutting Diameter (DMIN) shows the pilot hole diameter, not the nominal thread diameter.

Spare Parts

Holder Type	 Clamp Screw	Clamp Torque (lbf-in)	 Wrench (Insert)
C○-MMTIR21M11	TS25	8.9	TKY08F
C○-MMTIR21M16	CS350860T	31.0	TKY15F
C○-MMTIR25M22	TS43	31.0	TKY15F

GY PSC HOLDERS (EXTERNAL / FACE GROOVING)

PSC_GY00_A 00° type holder

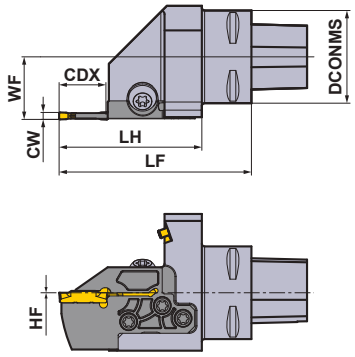

Right-hand tool holder shown.

Order Number	Stock R	Stock L	Coolant	Mounting Size	Dimensions (mm) DCONMS	Dimensions (mm) CW	WT (kg)
C4-GYHER/LM00-M25R/L	●	●	External	PSC40	40	2.0 — 6.35	0.7
C5-GYHER/LM00-M25R/L	●	●	External	PSC50	50	2.0 — 6.35	1.2
C6-GYHER/LM00-M25R/L*	●	●	External	PSC63	63	2.0 — 6.35	1.8

* Cannot be fitted to the Yamazaki Mazak INTEGREX i, j, e series.
Note 1) Please order the modular blade and modular holder separately.
Note 2) Please set the right-hand modular blade in the right-hand holder and the left-hand modular blade in the left-hand holder.

Set Dimensions with Modular Blades

Holder Type	Modular Blade Type	Dimensions (mm) Standard CW	CDX	WF	HF	LF	LH
C4-GYHER/LM00-M25R/L	**GYM25R/L○-D06**	2.0	6	27.0	0	69	47.6
C4-GYHER/LM00-M25R/L	**GYM25R/L○-D12**	2.0	12	27.0	0	77	55.6
C4-GYHER/LM00-M25R/L	**GYM25R/L○-D20**	2.0	20	27.0	0	83	61.6
C4-GYHER/LM00-M25R/L	**GYM25R/L○-E06**	2.5	6	27.0	0	69	47.6
C4-GYHER/LM00-M25R/L	**GYM25R/L○-E12**	2.5	12	27.0	0	77	55.6
C4-GYHER/LM00-M25R/L	**GYM25R/L○-E20**	2.5	20	27.0	0	83	61.6
C4-GYHER/LM00-M25R/L	**GYM25R/L○-F06**	3.0	6	27.0	0	69	47.6
C4-GYHER/LM00-M25R/L	**GYM25R/L○-F12**	3.0	12	27.0	0	77	55.6
C4-GYHER/LM00-M25R/L	**GYM25R/L○-F20**	3.0	20	27.0	0	83	61.6
C4-GYHER/LM00-M25R/L	**GYM25R/L○-G08**	4.0	8	27.0	0	71	49.6
C4-GYHER/LM00-M25R/L	**GYM25R/L○-G14**	4.0	14	27.0	0	77	55.6
C4-GYHER/LM00-M25R/L	**GYM25R/L○-G25**	4.0	25	27.0	0	88	66.6
C4-GYHER/LM00-M25R/L	**GYM25R/L○-H08**	5.0	8	27.0	0	71	49.6
C4-GYHER/LM00-M25R/L	**GYM25R/L○-H14**	5.0	14	27.0	0	77	55.6
C4-GYHER/LM00-M25R/L	**GYM25R/L○-H25**	5.0	25	27.0	0	88	66.6
C4-GYHER/LM00-M25R/L	**GYM25R/L○-J08**	6.0	8	27.0	0	71	49.6
C4-GYHER/LM00-M25R/L	**GYM25R/L○-J14**	6.0	14	27.0	0	77	55.6
C4-GYHER/LM00-M25R/L	**GYM25R/L○-J25**	6.0	25	27.0	0	88	66.6

* Modular blade type: Blades for face machining indicate a code for the minimum face grooving diameter. Example) GYM25RD-D12-040
The "○" symbol is a position to insert the letter "A" for external diameter machining or "D" for face machining. To select modular blades, refer to the Modular Blade List (starting from p.28).
Note 1) The indicated dimensions are values for standard inserts (GM chipbreaker). If other inserts are mounted, LF and LH may differ. Select the inserts and recommended conditions from "TOOL NEWS B255J-G GYGW Inserts". Links to PDF data are provided at the end of the document using QR codes.

● : **USA Stock**

Holder Type	Modular Blade Type	Dimensions (mm)					
		Standard **CW**	**CDX**	**WF**	**HF**	**LF**	**LH**
C5-GYHER/LM00-M25R/L	**GYM25R/L○-D06**	2.0	6	35.0	0	69	47.6
C5-GYHER/LM00-M25R/L	**GYM25R/L○-D12**	2.0	12	35.0	0	77	55.6
C5-GYHER/LM00-M25R/L	**GYM25R/L○-D20**	2.0	20	35.0	0	83	61.6
C5-GYHER/LM00-M25R/L	**GYM25R/L○-E06**	2.5	6	35.0	0	69	47.6
C5-GYHER/LM00-M25R/L	**GYM25R/L○-E12**	2.5	12	35.0	0	77	55.6
C5-GYHER/LM00-M25R/L	**GYM25R/L○-E20**	2.5	20	35.0	0	83	61.6
C5-GYHER/LM00-M25R/L	**GYM25R/L○-F06**	3.0	6	35.0	0	69	47.6
C5-GYHER/LM00-M25R/L	**GYM25R/L○-F12**	3.0	12	35.0	0	77	55.6
C5-GYHER/LM00-M25R/L	**GYM25R/L○-F20**	3.0	20	35.0	0	83	61.6
C5-GYHER/LM00-M25R/L	**GYM25R/L○-G08**	4.0	8	35.0	0	71	49.6
C5-GYHER/LM00-M25R/L	**GYM25R/L○-G14**	4.0	14	35.0	0	77	55.6
C5-GYHER/LM00-M25R/L	**GYM25R/L○-G25**	4.0	25	35.0	0	88	66.6
C5-GYHER/LM00-M25R/L	**GYM25R/L○-H08**	5.0	8	35.0	0	71	49.6
C5-GYHER/LM00-M25R/L	**GYM25R/L○-H14**	5.0	14	35.0	0	77	55.6
C5-GYHER/LM00-M25R/L	**GYM25R/L○-H25**	5.0	25	35.0	0	88	66.6
C5-GYHER/LM00-M25R/L	**GYM25R/L○-J08**	6.0	8	35.0	0	71	49.6
C5-GYHER/LM00-M25R/L	**GYM25R/L○-J14**	6.0	14	35.0	0	77	55.6
C5-GYHER/LM00-M25R/L	**GYM25R/L○-J25**	6.0	25	35.0	0	88	66.6
C6-GYHER/LM00-M25R/L	**GYM25R/L○-D06**	2.0	6	45.0	0	71	47.6
C6-GYHER/LM00-M25R/L	**GYM25R/L○-D12**	2.0	12	45.0	0	79	55.6
C6-GYHER/LM00-M25R/L	**GYM25R/L○-D20**	2.0	20	45.0	0	85	61.6
C6-GYHER/LM00-M25R/L	**GYM25R/L○-E06**	2.5	6	45.0	0	71	47.6
C6-GYHER/LM00-M25R/L	**GYM25R/L○-E12**	2.5	12	45.0	0	79	55.6
C6-GYHER/LM00-M25R/L	**GYM25R/L○-E20**	2.5	20	45.0	0	85	61.6
C6-GYHER/LM00-M25R/L	**GYM25R/L○-F06**	3.0	6	45.0	0	71	47.6
C6-GYHER/LM00-M25R/L	**GYM25R/L○-F12**	3.0	12	45.0	0	79	55.6
C6-GYHER/LM00-M25R/L	**GYM25R/L○-F20**	3.0	20	45.0	0	85	61.6
C6-GYHER/LM00-M25R/L	**GYM25R/L○-G08**	4.0	8	45.0	0	73	49.6
C6-GYHER/LM00-M25R/L	**GYM25R/L○-G14**	4.0	14	45.0	0	79	55.6
C6-GYHER/LM00-M25R/L	**GYM25R/L○-G25**	4.0	25	45.0	0	90	66.6
C6-GYHER/LM00-M25R/L	**GYM25R/L○-H08**	5.0	8	45.0	0	73	49.6
C6-GYHER/LM00-M25R/L	**GYM25R/L○-H14**	5.0	14	45.0	0	79	55.6
C6-GYHER/LM00-M25R/L	**GYM25R/L○-H25**	5.0	25	45.0	0	90	66.6
C6-GYHER/LM00-M25R/L	**GYM25R/L○-J08**	6.0	8	45.0	0	73	49.6
C6-GYHER/LM00-M25R/L	**GYM25R/L○-J14**	6.0	14	45.0	0	79	55.6
C6-GYHER/LM00-M25R/L	**GYM25R/L○-J25**	6.0	25	45.0	0	90	66.6

* Modular blade type: Blades for face machining indicate a code for the minimum face grooving diameter. Example) GYM25RD-D12-040
The "○" symbol is a position to insert the letter "A" for external diameter machining or "D" for face machining. To select modular blades, refer to the Modular Blade List (starting from p.28).

Note 1) The indicated dimensions are values for standard inserts (GM chipbreaker). If other inserts are mounted, LF and LH may differ. Select the inserts and recommended conditions from "TOOL NEWS B255J-G GYGW Inserts". Links to PDF data are provided at the end of the document using QR codes.

Spare Parts








Clamp Screw			Blade Screw			Plug		Nozzle		Wrench 1	Wrench 2
Order Number	Pcs.	Clamp Torque (lbf-in)	Order Number	Pcs.	Clamp Torque (lbf-in)	Order Number	Pcs.	Order Number	Pcs.	Order Number	Order Number
GY06013M	1	53.1	TS55	5	44.3	HSD05004S	1	NZ22042080S	1	TKY25D	TKY30R

* Nozzle Exchange Key: NZKH050S (Sold Separately)

GY PSC HOLDERS (EXTERNAL / FACE GROOVING)

PSC_GY90_A 90° type holder

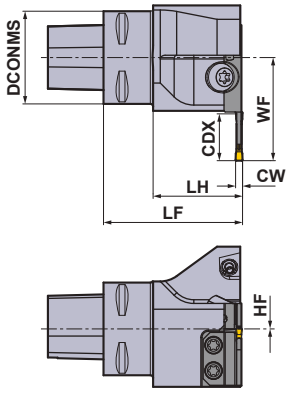

Left-hand tool holder shown.

Order Number	Stock		Coolant	Mounting Size	Dimensions (mm)		WT (kg)
	R	L			DCONMS	CW	
C4-GYHER/LM90-M25R/L	●	●	External	PSC40	40	2.0 — 6.35	0.8
C5-GYHER/LM90-M25R/L	●	●	External	PSC50	50	2.0 — 6.35	1.1
C6-GYHER/LM90-M25R/L	●	●	External	PSC63	63	2.0 — 6.35	1.9

Note 1) Please order the modular blade and modular holder separately.
Note 2) Please set the left-hand modular blade in the right-hand holder and the right-hand modular blade in the left-hand holder.

Set Dimensions with Modular Blades

Holder Type	Modular Blade Type	Dimensions (mm)					
		Standard CW	CDX	WF	HF	LF	LH
C4-GYHER/LM90-M25L/R	GYM25L/R○-D06	2.0	6	30.5	0	60	38.6
C4-GYHER/LM90-M25L/R	GYM25L/R○-D12	2.0	12	38.5	0	60	38.6
C4-GYHER/LM90-M25L/R	GYM25L/R○-D20	2.0	20	44.5	0	60	38.6
C4-GYHER/LM90-M25L/R	GYM25L/R○-E06	2.5	6	30.5	0	60	38.6
C4-GYHER/LM90-M25L/R	GYM25L/R○-E12	2.5	12	38.5	0	60	38.6
C4-GYHER/LM90-M25L/R	GYM25L/R○-E20	2.5	20	44.5	0	60	38.6
C4-GYHER/LM90-M25L/R	GYM25L/R○-F06	3.0	6	30.5	0	60	38.6
C4-GYHER/LM90-M25L/R	GYM25L/R○-F12	3.0	12	38.5	0	60	38.6
C4-GYHER/LM90-M25L/R	GYM25L/R○-F20	3.0	20	44.5	0	60	38.6
C4-GYHER/LM90-M25L/R	GYM25L/R○-G08	4.0	8	32.5	0	60	38.6
C4-GYHER/LM90-M25L/R	GYM25L/R○-G14	4.0	14	38.5	0	60	38.6
C4-GYHER/LM90-M25L/R	GYM25L/R○-G25	4.0	25	49.5	0	60	38.6
C4-GYHER/LM90-M25L/R	GYM25L/R○-H08	5.0	8	32.5	0	60	38.6
C4-GYHER/LM90-M25L/R	GYM25L/R○-H14	5.0	14	38.5	0	60	38.6
C4-GYHER/LM90-M25L/R	GYM25L/R○-H25	5.0	25	49.5	0	60	38.6
C4-GYHER/LM90-M25L/R	GYM25L/R○-J08	6.0	8	32.5	0	60	38.6
C4-GYHER/LM90-M25L/R	GYM25L/R○-J14	6.0	14	38.5	0	60	38.6
C4-GYHER/LM90-M25L/R	GYM25L/R○-J25	6.0	25	49.5	0	60	38.6

* Modular blade type: Blades for face machining indicate a code for the minimum face grooving diameter. Example) GYM25RD-D12-040
The "○" symbol is a position to insert the letter "A" for external diameter machining or "D" for face machining. To select modular blades, refer to the Modular Blade List (starting from p.28).

Note 1) The indicated dimensions are values for standard inserts (GM chipbreaker). If other inserts are mounted, LF and LH may differ. Select the inserts and recommended conditions from "TOOL NEWS B255J-G GYGW Inserts". Links to PDF data are provided at the end of the document using QR codes.

● : USA Stock

Holder Type	Modular Blade Type	Dimensions (mm)					
		Standard **CW**	**CDX**	**WF**	**HF**	**LF**	**LH**
C5-GYHER/LM90-M25L/R	**GYM25L/R◌-D06**	2.0	6	33.0	0	60	38.6
C5-GYHER/LM90-M25L/R	**GYM25L/R◌-D12**	2.0	12	41.0	0	60	38.6
C5-GYHER/LM90-M25L/R	**GYM25L/R◌-D20**	2.0	20	47.0	0	60	38.6
C5-GYHER/LM90-M25L/R	**GYM25L/R◌-E06**	2.5	6	33.0	0	60	38.6
C5-GYHER/LM90-M25L/R	**GYM25L/R◌-E12**	2.5	12	41.0	0	60	38.6
C5-GYHER/LM90-M25L/R	**GYM25L/R◌-E20**	2.5	20	47.0	0	60	38.6
C5-GYHER/LM90-M25L/R	**GYM25L/R◌-F06**	3.0	6	33.0	0	60	38.6
C5-GYHER/LM90-M25L/R	**GYM25L/R◌-F12**	3.0	12	41.0	0	60	38.6
C5-GYHER/LM90-M25L/R	**GYM25L/R◌-F20**	3.0	20	47.0	0	60	38.6
C5-GYHER/LM90-M25L/R	**GYM25L/R◌-G08**	4.0	8	35.0	0	60	38.6
C5-GYHER/LM90-M25L/R	**GYM25L/R◌-G14**	4.0	14	41.0	0	60	38.6
C5-GYHER/LM90-M25L/R	**GYM25L/R◌-G25**	4.0	25	52.0	0	60	38.6
C5-GYHER/LM90-M25L/R	**GYM25L/R◌-H08**	5.0	8	35.0	0	60	38.6
C5-GYHER/LM90-M25L/R	**GYM25L/R◌-H14**	5.0	14	41.0	0	60	38.6
C5-GYHER/LM90-M25L/R	**GYM25L/R◌-H25**	5.0	25	52.0	0	60	38.6
C5-GYHER/LM90-M25L/R	**GYM25L/R◌-J08**	6.0	8	35.0	0	60	38.6
C5-GYHER/LM90-M25L/R	**GYM25L/R◌-J14**	6.0	14	41.0	0	60	38.6
C5-GYHER/LM90-M25L/R	**GYM25L/R◌-J25**	6.0	25	52.0	0	60	38.6
C6-GYHER/LM90-M25L/R	**GYM25L/R◌-D06**	2.0	6	40.0	0	70	46.6
C6-GYHER/LM90-M25L/R	**GYM25L/R◌-D12**	2.0	12	48.0	0	70	46.6
C6-GYHER/LM90-M25L/R	**GYM25L/R◌-D20**	2.0	20	54.0	0	70	46.6
C6-GYHER/LM90-M25L/R	**GYM25L/R◌-E06**	2.5	6	40.0	0	70	46.6
C6-GYHER/LM90-M25L/R	**GYM25L/R◌-E12**	2.5	12	48.0	0	70	46.6
C6-GYHER/LM90-M25L/R	**GYM25L/R◌-E20**	2.5	20	54.0	0	70	46.6
C6-GYHER/LM90-M25L/R	**GYM25L/R◌-F06**	3.0	6	40.0	0	70	46.6
C6-GYHER/LM90-M25L/R	**GYM25L/R◌-F12**	3.0	12	48.0	0	70	46.6
C6-GYHER/LM90-M25L/R	**GYM25L/R◌-F20**	3.0	20	54.0	0	70	46.6
C6-GYHER/LM90-M25L/R	**GYM25L/R◌-G08**	4.0	8	42.0	0	70	46.6
C6-GYHER/LM90-M25L/R	**GYM25L/R◌-G14**	4.0	14	48.0	0	70	46.6
C6-GYHER/LM90-M25L/R	**GYM25L/R◌-G25**	4.0	25	59.0	0	70	46.6
C6-GYHER/LM90-M25L/R	**GYM25L/R◌-H08**	5.0	8	42.0	0	70	46.6
C6-GYHER/LM90-M25L/R	**GYM25L/R◌-H14**	5.0	14	48.0	0	70	46.6
C6-GYHER/LM90-M25L/R	**GYM25L/R◌-H25**	5.0	25	59.0	0	70	46.6
C6-GYHER/LM90-M25L/R	**GYM25L/R◌-J08**	6.0	8	42.0	0	70	46.6
C6-GYHER/LM90-M25L/R	**GYM25L/R◌-J14**	6.0	14	48.0	0	70	46.6
C6-GYHER/LM90-M25L/R	**GYM25L/R◌-J25**	6.0	25	59.0	0	70	46.6

* Modular blade type: Blades for face machining indicate a code for the minimum face grooving diameter. Example) GYM25RD-D12-040
The "◌" symbol is a position to insert the letter "A" for external diameter machining or "D" for face machining. To select modular blades, refer to the Modular Blade List (starting from p.28).

Note 1) The indicated dimensions are values for standard inserts (GM chipbreaker). If other inserts are mounted, LF and LH may differ. Select the inserts and recommended conditions from "TOOL NEWS B255J-G GYGW Inserts". Links to PDF data are provided at the end of the document using QR codes.

Spare Parts








Clamp Screw			Blade Screw			Plug		Nozzle		Wrench 1	Wrench 2
Order Number	Pcs.	Clamp Torque (lbf-in)	Order Number	Pcs.	Clamp Torque (lbf-in)	Order Number	Pcs.	Order Number	Pcs.	Order Number	Order Number
GY06013M	1	53.1	TS55	5	44.3	HSD05004S	1	NZ22042080S	1	TKY25D	TKY30R

* Nozzle Exchange Key: NZKH050S (Sold Separately)

GY PSC HOLDERS (FOR RECESSING)

PSC_GY50_A — For 50° recessing holder

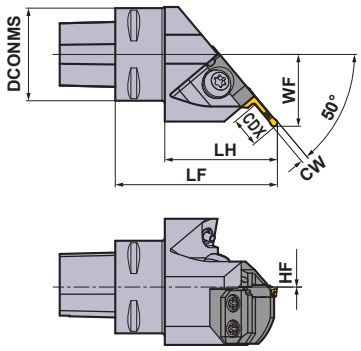

Left-hand tool holder shown.

Order Number	Stock		Coolant	Mounting Size	Dimensions (mm)		WT (kg)
	R	L			DCONMS	CW	
C4-GYHER/LM50-M25R/L	●	●	External	PSC40	40	2.0 — 6.35	0.6
C5-GYHER/LM50-M25R/L	●	●	External	PSC50	50	2.0 — 6.35	0.9
C6-GYHER/LM50-M25R/L	●	●	External	PSC63	63	2.0 — 6.35	1.3

Note 1) Please order the modular blade and modular holder separately.
Note 2) Please set the left-hand modular blade in the right-hand holder and the right-hand modular blade in the left-hand holder.

Spare Parts








Clamp Screw			Blade Screw			Plug		Nozzle		Wrench 1	Wrench 2
Order Number	Pcs.	Clamp Torque (lbf-in)	Order Number	Pcs.	Clamp Torque (lbf-in)	Order Number	Pcs.	Order Number	Pcs.	Order Number	Order Number
GY06013M	1	53.1	TS54	5	44.3	HSD05004S	1	NZ22042080S	1	TKY25D	TKY30R

* Nozzle Exchange Key: NZKH050S (Sold Separately)

● : USA Stock

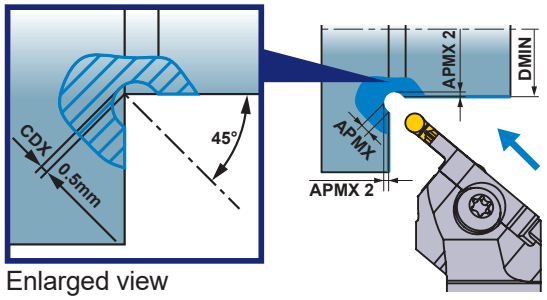

Enlarged view

Set Dimensions with Modular Blades

Holder Type	Modular Blade Type	Dimensions (mm)								
		Standard CW	CDX	DMIN	APMX	APMX2	WF	HF	LF	LH
C4-GYHER/LM50-M25L/R	**GYM25L/RC-D005**	2.0	0.5	30	1.50	0.646	30.6	0	70.2	48.8
C4-GYHER/LM50-M25L/R	**GYM25L/RC-E005**	2.5	0.5	30	1.75	0.720	30.8	0	70.1	48.7
C4-GYHER/LM50-M25L/R	**GYM25L/RC-F005**	3.0	0.5	30	2.00	0.793	31.0	0	70.0	48.6
C4-GYHER/LM50-M25L/R	**GYM25L/RC-G005**	4.0	0.5	20	2.50	0.939	31.4	0	69.8	48.4
C4-GYHER/LM50-M25L/R	**GYM25L/RC-H005**	5.0	0.5	20	2.88	1.049	31.8	0	69.6	48.2
C4-GYHER/LM50-M25L/R	**GYM25L/RC-J005**	6.0	0.5	20	3.50	1.232	32.4	0	69.4	48.0
C5-GYHER/LM50-M25L/R	**GYM25L/RC-D005**	2.0	0.5	30	1.50	0.646	32.6	0	70.2	48.8
C5-GYHER/LM50-M25L/R	**GYM25L/RC-E005**	2.5	0.5	30	1.75	0.720	32.8	0	70.1	48.7
C5-GYHER/LM50-M25L/R	**GYM25L/RC-F005**	3.0	0.5	30	2.00	0.793	33.0	0	70.0	48.6
C5-GYHER/LM50-M25L/R	**GYM25L/RC-G005**	4.0	0.5	20	2.50	0.939	33.4	0	69.8	48.4
C5-GYHER/LM50-M25L/R	**GYM25L/RC-H005**	5.0	0.5	20	2.88	1.049	33.8	0	69.6	48.2
C5-GYHER/LM50-M25L/R	**GYM25L/RC-J005**	6.0	0.5	20	3.50	1.232	34.4	0	69.4	48.0
C6-GYHER/LM50-M25L/R	**GYM25L/RC-D005**	2.0	0.5	30	1.50	0.646	39.6	0	70.2	46.8
C6-GYHER/LM50-M25L/R	**GYM25L/RC-E005**	2.5	0.5	30	1.75	0.720	39.8	0	70.1	46.7
C6-GYHER/LM50-M25L/R	**GYM25L/RC-F005**	3.0	0.5	30	2.00	0.793	40.0	0	70.0	46.6
C6-GYHER/LM50-M25L/R	**GYM25L/RC-G005**	4.0	0.5	20	2.50	0.939	40.4	0	69.8	46.4
C6-GYHER/LM50-M25L/R	**GYM25L/RC-H005**	5.0	0.5	20	2.88	1.049	40.8	0	69.6	46.2
C6-GYHER/LM50-M25L/R	**GYM25L/RC-J005**	6.0	0.5	20	3.50	1.232	41.4	0	69.4	46.0

DMIN = Min. Cutting Diameter

*To select modular blades, refer to the Modular Blade List (starting from p.28).

Note 1) The indicated dimensions are values for standard inserts (BM chipbreaker). If other inserts are mounted, LF and LH may differ. Select the inserts and recommended conditions from “TOOL NEWS B255J-G GYGW Inserts”. Links to PDF data are provided at the end of the document using QR codes.

Modular Blade Order Number

■ MODULAR BLADE

● EXTERNAL/FOR RECESSING

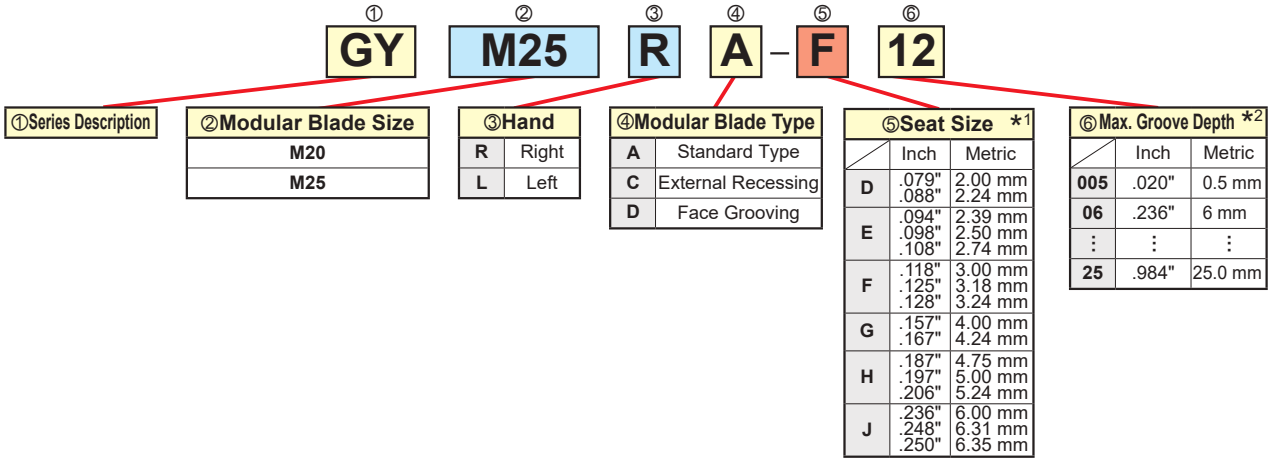

①Series Description

②Modular Blade Size
M20
M25

③Hand	
R	Right
L	Left

④Modular Blade Type	
A	Standard Type
C	External Recessing
D	Face Grooving

⑤Seat Size *1	Inch	Metric
D	.079" .088"	2.00 mm 2.24 mm
E	.094" .098" .108"	2.39 mm 2.50 mm 2.74 mm
F	.118" .125" .128"	3.00 mm 3.18 mm 3.24 mm
G	.157" .167"	4.00 mm 4.24 mm
H	.187" .197" .206"	4.75 mm 5.00 mm 5.24 mm
J	.236" .248" .250"	6.00 mm 6.31 mm 6.35 mm

⑥Max. Groove Depth *2	Inch	Metric
005	.020"	0.5 mm
06	.236"	6 mm
⋮	⋮	⋮
25	.984"	25.0 mm

● FACE GROOVING



⑦Min. Groove Diameter	Inch	Metric
035	1.378"	35 mm
040	1.575"	40 mm
⋮	⋮	⋮
250	9.843"	250 mm

*1 Select a seat size with the same symbol as that of the insert.
*2 The maximum groove depth is a value when used for external grooving and changes according to the insert used.

Modular Blades Selection Chart

Holder Angle	Application	Holder Type	Hand (R/L)	Seat Size	Modular Blade	
					Order Number	Hand (R/L)
00°	External	C◌-GYHERM00-M25R	R	D	GYM25RA-D06	R
				D	GYM25RA-D12	R
				D	GYM25RA-D20	R
				E	GYM25RA-E06	R
				E	GYM25RA-E12	R
				E	GYM25RA-E20	R
				F	GYM25RA-F06	R
				F	GYM25RA-F12	R
				F	GYM25RA-F20	R
				G	GYM25RA-G08	R
				G	GYM25RA-G14	R
				G	GYM25RA-G25	R
				H	GYM25RA-H08	R
				H	GYM25RA-H14	R
				H	GYM25RA-H25	R
				J	GYM25RA-J08	R
				J	GYM25RA-J14	R
				J	GYM25RA-J25	R
		C◌-GYHELM00-M25L	L	D	GYM25LA-D06	L
				D	GYM25LA-D12	L
				D	GYM25LA-D20	L
				E	GYM25LA-E06	L
				E	GYM25LA-E12	L
				E	GYM25LA-E20	L
				F	GYM25LA-F06	L
				F	GYM25LA-F12	L
				F	GYM25LA-F20	L
				G	GYM25LA-G08	L
				G	GYM25LA-G14	L
				G	GYM25LA-G25	L
				H	GYM25LA-H08	L
				H	GYM25LA-H14	L
				H	GYM25LA-H25	L
				J	GYM25LA-J08	L
				J	GYM25LA-J14	L
				J	GYM25LA-J25	L
00°	Face Grooving	C◌-GYHERM00-M25R	R	D	GYM25RD-D12-040	R
				D	GYM25RD-D12-050	R
				D	GYM25RD-D12-060	R
				D	GYM25RD-D12-075	R
				D	GYM25RD-D12-100	R
				D	GYM25RD-D12-135	R
				D	GYM25RD-D12-180	R
				E	GYM25RD-E12-040	R
				E	GYM25RD-E12-050	R
				E	GYM25RD-E12-060	R
				E	GYM25RD-E12-075	R
				E	GYM25RD-E12-100	R
				E	GYM25RD-E12-135	R
				E	GYM25RD-E12-180	R
				F	GYM25RD-F12-035	R
				F	GYM25RD-F12-040	R
				F	GYM25RD-F12-050	R
				F	GYM25RD-F12-060	R
				F	GYM25RD-F12-075	R
				F	GYM25RD-F12-100	R
				F	GYM25RD-F12-135	R
				F	GYM25RD-F12-180	R
				F	GYM25RD-F12-225	R
				F	GYM25RD-F20-060	R
				F	GYM25RD-F20-075	R
				F	GYM25RD-F20-100	R
				F	GYM25RD-F20-135	R
				F	GYM25RD-F20-180	R
				F	GYM25RD-F20-225	R
				G	GYM25RD-G14-040	R
				G	GYM25RD-G14-050	R
				G	GYM25RD-G14-060	R

Holder Angle	Application	Holder Type	Hand (R/L)	Seat Size	Modular Blade	
					Order Number	Hand (R/L)
00°	Face Grooving	C◌-GYHERM00-M25R	R	G	GYM25RD-G14-085	R
				G	GYM25RD-G14-125	R
				G	GYM25RD-G14-180	R
				G	GYM25RD-G14-250	R
				G	GYM25RD-G25-060	R
				G	GYM25RD-G25-085	R
				G	GYM25RD-G25-125	R
				G	GYM25RD-G25-180	R
				G	GYM25RD-G25-250	R
				H	GYM25RD-H14-050	R
				H	GYM25RD-H14-060	R
				H	GYM25RD-H14-085	R
				H	GYM25RD-H14-125	R
				H	GYM25RD-H14-180	R
				H	GYM25RD-H14-250	R
				H	GYM25RD-H25-060	R
				H	GYM25RD-H25-085	R
				H	GYM25RD-H25-125	R
				H	GYM25RD-H25-180	R
				H	GYM25RD-H25-250	R
				J	GYM25RD-J14-050	R
				J	GYM25RD-J14-070	R
				J	GYM25RD-J14-110	R
				J	GYM25RD-J14-170	R
				J	GYM25RD-J14-250	R
				J	GYM25RD-J25-070	R
				J	GYM25RD-J25-110	R
				J	GYM25RD-J25-170	R
				J	GYM25RD-J25-250	R
		C◌-GYHELM00-M25L	L	D	GYM25LD-D12-040	L
				D	GYM25LD-D12-050	L
				D	GYM25LD-D12-060	L
				D	GYM25LD-D12-075	L
				D	GYM25LD-D12-100	L
				D	GYM25LD-D12-135	L
				D	GYM25LD-D12-180	L
				E	GYM25LD-E12-040	L
				E	GYM25LD-E12-050	L
				E	GYM25LD-E12-060	L
				E	GYM25LD-E12-075	L
				E	GYM25LD-E12-100	L
				E	GYM25LD-E12-135	L
				E	GYM25LD-E12-180	L
				F	GYM25LD-F12-035	L
				F	GYM25LD-F12-040	L
				F	GYM25LD-F12-050	L
				F	GYM25LD-F12-060	L
				F	GYM25LD-F12-075	L
				F	GYM25LD-F12-100	L
				F	GYM25LD-F12-135	L
				F	GYM25LD-F12-180	L
				F	GYM25LD-F12-225	L
				F	GYM25LD-F20-060	L
				F	GYM25LD-F20-075	L
				F	GYM25LD-F20-100	L
				F	GYM25LD-F20-135	L
				F	GYM25LD-F20-180	L
				F	GYM25LD-F20-225	L
				G	GYM25LD-G14-040	L
				G	GYM25LD-G14-050	L
				G	GYM25LD-G14-060	L
				G	GYM25LD-G14-085	L
				G	GYM25LD-G14-125	L
				G	GYM25LD-G14-180	L
				G	GYM25LD-G14-250	L
				G	GYM25LD-G25-060	L
				G	GYM25LD-G25-085	L
				G	GYM25LD-G25-125	L

Modular Blades Selection Chart

Holder Angle	Application	Holder Type	Hand (R/L)	Seat Size	Modular Blade	
					Order Number	Hand (R/L)
00°	Face Grooving	C◌-GYHELM00-M25L	L	G	GYM25LD-G25-180	L
				G	GYM25LD-G25-250	L
				H	GYM25LD-H14-050	L
				H	GYM25LD-H14-060	L
				H	GYM25LD-H14-085	L
				H	GYM25LD-H14-125	L
				H	GYM25LD-H14-180	L
				H	GYM25LD-H14-250	L
				H	GYM25LD-H25-060	L
				H	GYM25LD-H25-085	L
				H	GYM25LD-H25-125	L
				H	GYM25LD-H25-180	L
				H	GYM25LD-H25-250	L
				J	GYM25LD-J14-050	L
				J	GYM25LD-J14-070	L
				J	GYM25LD-J14-110	L
				J	GYM25LD-J14-170	L
				J	GYM25LD-J14-250	L
				J	GYM25LD-J25-070	L
				J	GYM25LD-J25-110	L
				J	GYM25LD-J25-170	L
				J	GYM25LD-J25-250	L
90°	External	C◌-GYHERM90-M25L	R	D	GYM25LA-D06	L
				D	GYM25LA-D12	L
				D	GYM25LA-D20	L
				E	GYM25LA-E06	L
				E	GYM25LA-E12	L
				E	GYM25LA-E20	L
				F	GYM25LA-F06	L
				F	GYM25LA-F12	L
				F	GYM25LA-F20	L
				G	GYM25LA-G08	L
				G	GYM25LA-G14	L
				G	GYM25LA-G25	L
				H	GYM25LA-H08	L
				H	GYM25LA-H14	L
				H	GYM25LA-H25	L
				J	GYM25LA-J08	L
				J	GYM25LA-J14	L
				J	GYM25LA-J25	L
		C◌-GYHELM90-M25R	L	D	GYM25RA-D06	R
				D	GYM25RA-D12	R
				D	GYM25RA-D20	R
				E	GYM25RA-E06	R
				E	GYM25RA-E12	R
				E	GYM25RA-E20	R
				F	GYM25RA-F06	R
				F	GYM25RA-F12	R
				F	GYM25RA-F20	R
				G	GYM25RA-G08	R
				G	GYM25RA-G14	R
				G	GYM25RA-G25	R
				H	GYM25RA-H08	R
				H	GYM25RA-H14	R
				H	GYM25RA-H25	R
				J	GYM25RA-J08	R
				J	GYM25RA-J14	R
				J	GYM25RA-J25	R
90°	Face Grooving	C◌-GYHERM90-M25L	R	D	GYM25LD-D12-040	L
				D	GYM25LD-D12-050	L
				D	GYM25LD-D12-060	L
				D	GYM25LD-D12-075	L
				D	GYM25LD-D12-100	L
				D	GYM25LD-D12-135	L
				D	GYM25LD-D12-180	L
				E	GYM25LD-E12-040	L
				E	GYM25LD-E12-050	L
				E	GYM25LD-E12-060	L

Holder Angle	Application	Holder Type	Hand (R/L)	Seat Size	Modular Blade	
					Order Number	Hand (R/L)
90°	Face Grooving	C◌-GYHERM90-M25L	R	E	GYM25LD-E12-075	L
				E	GYM25LD-E12-100	L
				E	GYM25LD-E12-135	L
				E	GYM25LD-E12-180	L
				F	GYM25LD-F12-035	L
				F	GYM25LD-F12-040	L
				F	GYM25LD-F12-050	L
				F	GYM25LD-F12-060	L
				F	GYM25LD-F12-075	L
				F	GYM25LD-F12-100	L
				F	GYM25LD-F12-135	L
				F	GYM25LD-F12-180	L
				F	GYM25LD-F12-225	L
				F	GYM25LD-F20-060	L
				F	GYM25LD-F20-075	L
				F	GYM25LD-F20-100	L
				F	GYM25LD-F20-135	L
				F	GYM25LD-F20-180	L
				F	GYM25LD-F20-225	L
				G	GYM25LD-G14-040	L
				G	GYM25LD-G14-050	L
				G	GYM25LD-G14-060	L
				G	GYM25LD-G14-085	L
				G	GYM25LD-G14-125	L
				G	GYM25LD-G14-180	L
				G	GYM25LD-G14-250	L
				G	GYM25LD-G25-060	L
				G	GYM25LD-G25-085	L
				G	GYM25LD-G25-125	L
				G	GYM25LD-G25-180	L
				G	GYM25LD-G25-250	L
				H	GYM25LD-H14-050	L
				H	GYM25LD-H14-060	L
				H	GYM25LD-H14-085	L
				H	GYM25LD-H14-125	L
				H	GYM25LD-H14-180	L
				H	GYM25LD-H14-250	L
				H	GYM25LD-H25-060	L
				H	GYM25LD-H25-085	L
				H	GYM25LD-H25-125	L
				H	GYM25LD-H25-180	L
				H	GYM25LD-H25-250	L
				J	GYM25LD-J14-050	L
				J	GYM25LD-J14-070	L
				J	GYM25LD-J14-110	L
				J	GYM25LD-J14-170	L
				J	GYM25LD-J14-250	L
				J	GYM25LD-J25-070	L
				J	GYM25LD-J25-110	L
				J	GYM25LD-J25-170	L
				J	GYM25LD-J25-250	L
		C◌-GYHELM90-M25R	L	D	GYM25RD-D12-040	R
				D	GYM25RD-D12-050	R
				D	GYM25RD-D12-060	R
				D	GYM25RD-D12-075	R
				D	GYM25RD-D12-100	R
				D	GYM25RD-D12-135	R
				D	GYM25RD-D12-180	R
				E	GYM25RD-E12-040	R
				E	GYM25RD-E12-050	R
				E	GYM25RD-E12-060	R
				E	GYM25RD-E12-075	R
				E	GYM25RD-E12-100	R
				E	GYM25RD-E12-135	R
				E	GYM25RD-E12-180	R
				F	GYM25RD-F12-035	R
				F	GYM25RD-F12-040	R
				F	GYM25RD-F12-050	R

Holder Angle	Application	Holder Type	Hand (R/L)	Seat Size	Modular Blade	
					Order Number	Hand (R/L)
90°	Face Grooving	C◌-GYHELM90-M25R	L	F	GYM25RD-F12-060	R
				F	GYM25RD-F12-075	R
				F	GYM25RD-F12-100	R
				F	GYM25RD-F12-135	R
				F	GYM25RD-F12-180	R
				F	GYM25RD-F12-225	R
				F	GYM25RD-F20-060	R
				F	GYM25RD-F20-075	R
				F	GYM25RD-F20-100	R
				F	GYM25RD-F20-135	R
				F	GYM25RD-F20-180	R
				F	GYM25RD-F20-225	R
				G	GYM25RD-G14-040	R
				G	GYM25RD-G14-050	R
				G	GYM25RD-G14-060	R
				G	GYM25RD-G14-085	R
				G	GYM25RD-G14-125	R
				G	GYM25RD-G14-180	R
				G	GYM25RD-G14-250	R
				G	GYM25RD-G25-060	R
				G	GYM25RD-G25-085	R
				G	GYM25RD-G25-125	R
				G	GYM25RD-G25-180	R
				G	GYM25RD-G25-250	R
				H	GYM25RD-H14-050	R
				H	GYM25RD-H14-060	R
				H	GYM25RD-H14-085	R
				H	GYM25RD-H14-125	R
				H	GYM25RD-H14-180	R
				H	GYM25RD-H14-250	R
				H	GYM25RD-H25-060	R
				H	GYM25RD-H25-085	R
				H	GYM25RD-H25-125	R
				H	GYM25RD-H25-180	R
				H	GYM25RD-H25-250	R
				J	GYM25RD-J14-050	R
				J	GYM25RD-J14-070	R
				J	GYM25RD-J14-110	R
				J	GYM25RD-J14-170	R
				J	GYM25RD-J14-250	R
				J	GYM25RD-J25-070	R
				J	GYM25RD-J25-110	R
				J	GYM25RD-J25-170	R
				J	GYM25RD-J25-250	R

Holder Angle	Application	Holder Type	Hand (R/L)	Seat Size	Modular Blade	
					Order Number	Hand (R/L)
50°	For Recessing	C◌-GYHERM50-M25L	R	D	GYM25LC-D005	L
				E	GYM25LC-E005	L
				F	GYM25LC-F005	L
				G	GYM25LC-G005	L
				H	GYM25LC-H005	L
				J	GYM25LC-J005	L
		C◌-GYHELM50-M25R	L	D	GYM25RC-D005	R
				E	GYM25RC-E005	R
				F	GYM25RC-F005	R
				G	GYM25RC-G005	R
				H	GYM25RC-H005	R
				J	GYM25RC-J005	R

Please use our website for insert selection and recommended cutting conditions.



ISO Turning Tools

Insert Selection
Web Catalog

ISO and CBN Inserts

Recommended Cutting Conditions
Product Brochure

ISO Inserts

CBN Inserts

Grooving/Thread Turning Tools

Insert Selection
Web Catalog

Grooving Inserts

Threading Inserts

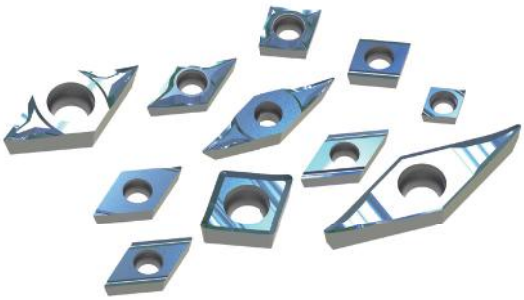

Recommended Cutting Conditions
Product Brochure

Grooving / Cutting-Off

MMT Series



Memo

MTEC

MACHINING TECHNOLOGY AND EDUCATION CENTER

Welcome to our new world-class Machining Technology and Education Center (MTEC) in Mooresville, NC providing year round support and services to North America.



ABOUT MTEC

TOOLING PROPOSALS & EVALUATION

We will review your current processes or outline a new process. From this review, we will improve productivity, analyze programming methods and output a solution with programming, tooling and time savings.

MACHINING SIMULATION

Using the latest CAD/CAM software and our cutting tool experience, we will outline a new process using proper machining techniques to maximize tool life and productivity.

TECHNICAL SUPPORT

Dedicated local professionals to answer any of your order, product or technical questions.

TRAINING

We are excited to offer several levels of training with goals to reach our highest level--Craftsman Machining Technology. At MTEC NC, we will train using a combination of classroom and hands-on machine time to develop skills and real-world understanding of materials, tools and applications. In addition to multi-day courses, we will have Machining Technology skills seminars, as well as seminars from our partners to complement our apprentice level courses, our journeyman courses, and up to our craftsman level courses.

PROCESS IMPROVEMENTS

Review of the complete part processing and recommend changes of speed, feed, new tooling, reduction of passes, modifying programming and other solutions to reduce cycle time, save money and be proactive.





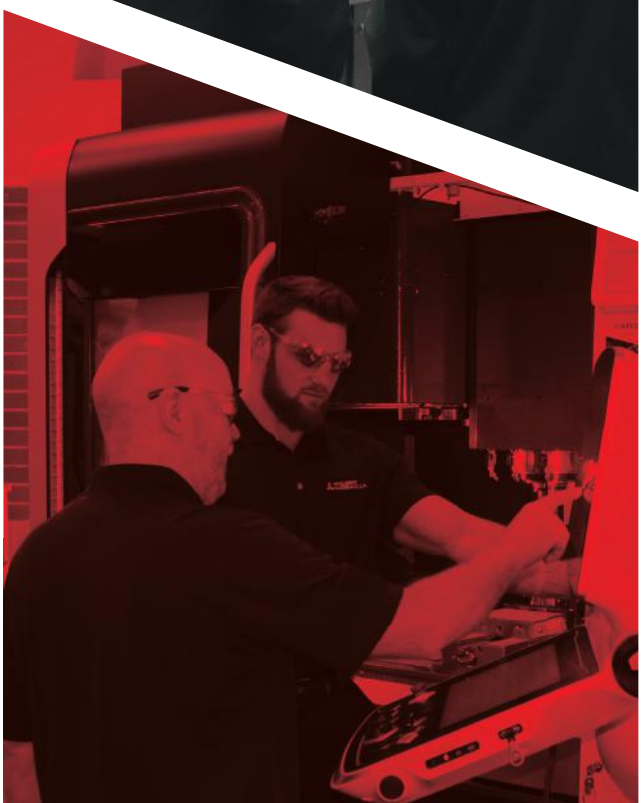

WEBINARS

Our FREE online webinar series is available anytime on-demand. Narrated by the MTEC training staff, you will receive in-depth knowledge of the topic. Simply register online at the link below for access. You will receive a certificate upon completion of each course.

mmusnewsstand.com/register

ONLINE TRAINING

Our FREE e-learning program offers 11 courses in drilling, milling, turning, threading, tool grades and workpiece materials. Once each course is completed, you will be given the opportunity to print a certificate.

- Basic Drilling
- Basic Milling
- Basic Turning
- Advanced Drilling
- Advanced End Milling
- Advanced Turning
- Basic Threading
- Advanced Face Milling
- Basic Workpiece Materials
- Tool Grades
- Advanced Workpiece Materials

TRAINING COURSES

Programs are designed for several levels of skill development – from basic understanding to advance manufacturing with digital solutions, complementing to your valued experience in CNC machining environment. Participate in machining demonstrations with Mitsubishi Materials' skilled engineers. Discover methods to reduce setup and cycle time, optimize programs and enhance your knowledge base.

Information on course schedule,
course description, and accommodations

MTECTRAINING.INFO

Follow the QR Code for a virtual facility tour

MITSUBISHI MATERIALS U.S.A.

MITSUBISHI MATERIALS U.S.A. CORPORATION

California Office
(Headquarters)

3535 Hyland Avenue, Suite 200
Costa Mesa, CA 92626
Customer Service: 800.523.0800
Technical Service: 800.486.2341

Detroit Office
(Moldino CS)

2001 Orndorf Drive
Brighton, MI 48116
Main: 248.308.2620
Fax: 248.308.2627

MMC Metal de Mexico, S.A. DE C.V.

Av. La Cañada No.16,
Parque Industrial Bernardo
Quintana, El Marques,
Queretaro C.P. 76246 MEXICO
Main: +52.442.221.61.36
Fax: +52.442.221.61.34

North Carolina-MTEC
(Marketing & Technical Center)

105 Corporate Center Drive, Suite A
Mooresville, NC 28117
Main: 980.312.3100
Fax: 704.746.9292

Toronto Office
(Canada Branch)

600 Matheson Blvd. Unit 5 (Office)
Mississauga, ON L5R 4C1
Main: 905.814.0240
Fax: 905.814.0245

FOR YOUR SAFETY

- Don't handle inserts and chips without gloves.
- Please machine within the recommended application range and exchange expired tools with new ones in advance of breakage.
- Please use safety covers and wear safety glasses.
- When using compounded cutting oils, please take fire precautions.
- When attaching inserts or spare parts, please use only the correct wrench or driver.
- When using rotating tools, please make a trial run to check run-out, vibration and abnormal sounds etc.

www.mmc-carbide.com/us

Tools specifications subject to change without notice.

B259A-US-2026.11