Chicago Pneumatic

People. Passion. Performance.

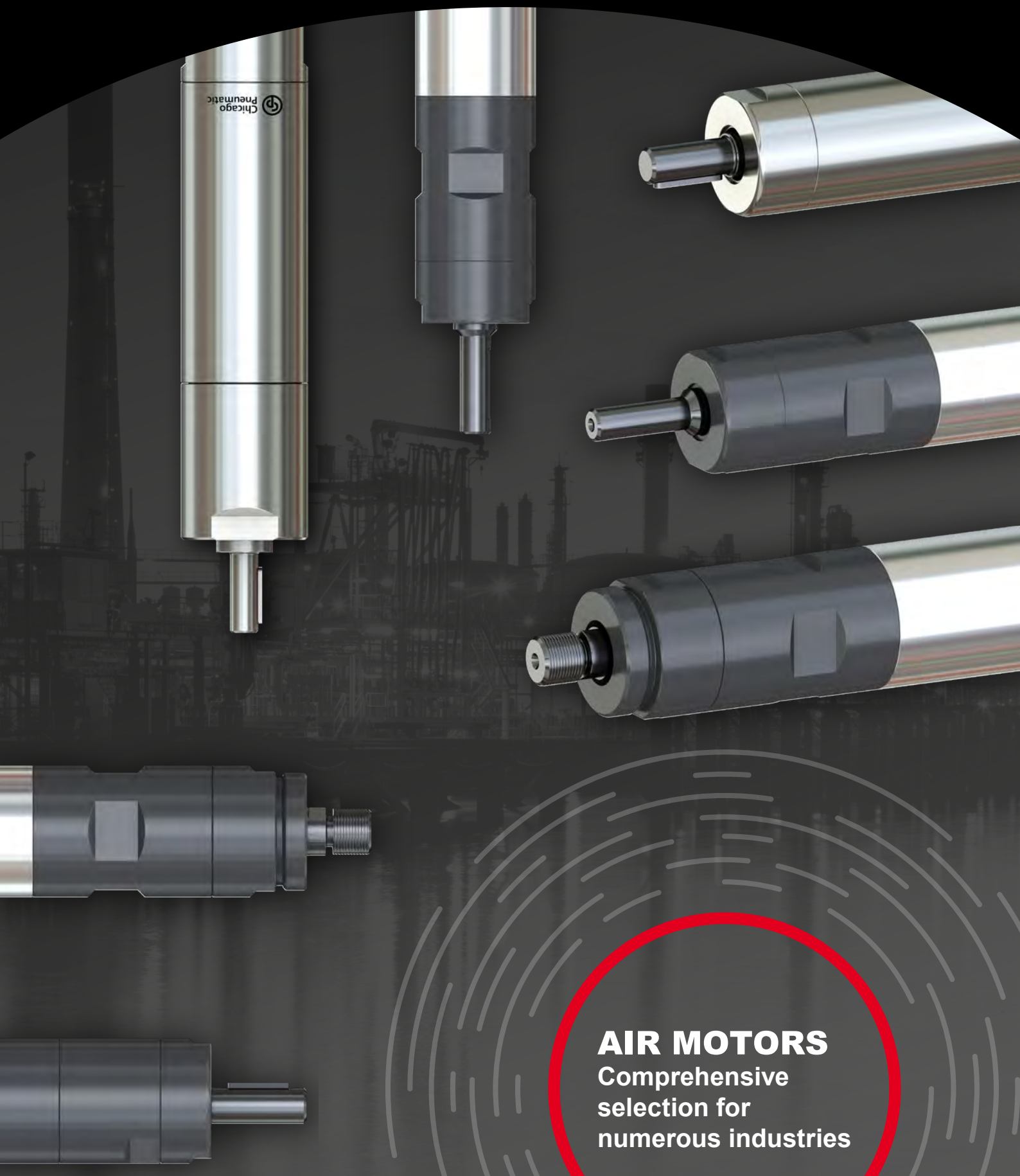

AIR MOTORS

Comprehensive selection for numerous industries

AIR MOTORS



Contents

General information 4

Selecting the correct air motor 5–9
– Advantages of air motors. 5
– Modifying the power of an air motor 6–7
– Differences between air motors. 8–9

M16 series 10–13

M25/ M2501 series. 14–19

M39/ M3901 series. 20–22

M84/ MR8401 series 24–26

2H410 series 27

Accessories 30–32

Configurator and technical guide 33

Installation and commissioning. 34



ATEX available

Air Motors from Chicago Pneumatic – areas of application



Chicago Pneumatic offers a wide range of rust- and oil-free air vane motors with a power range from 0.16 kW (0.21 Hp) to 1.83 kW (2.45 Hp). A large number of motors are available with a threaded spindle (non reversible) or a keyed spindle (reversible). Customer-specific solutions are also possible.

The air motors are resistant to dust, humidity and temperature fluctuations and can also be used in an ATEX version even under hazardous environmental conditions.

Air motors are an ideal solution for a variety of applications, even in extremely different areas such as mechanical engineering, automotive industry, packaging, paper or printing industry, petrochemical industry, agricultural equipment, the food industry and many other applications.

Air motors have many advantages over an electric motor and are often times the only equipment that can be implemented.


Textile industry


Marine


Petrochemicals


Food industry


Agricultural equipment


Printers


Chemicals


Packaging industry

THE BEST SOLUTION FOR YOUR APPLICATION

Advantages of Air Motors

Heavy duty



- Can be stalled indefinitely without over-heating or causing other damage
- Can be used in continuous stop-start operation
- Unaffected by hostil environmental conditions

Performances



- Compact and light: 4 to 6 times smaller and lighter than an electric motor with the same output
- The power adapts to the load applied
- Low installation costs, low operating costs, low maintenance costs

Versatility



- Multiple operating speeds and torque ranges, easy power adjustment, option for progressive or instant start
- Wide range of accessories
- Easy to install and operate

Safe



- No risk: No heat, no sparks
- No hydraulic fluid:
  No leakage, no contamination, no fire hazard, no risk of a pressure surge
- Resistant to electromagnetic phenomena
- No electrical qualifications required

Advantages over electric motors

- **Can be overloaded to a stall/standstill without damage**
- **Overload-proof**
- **Low installation costs**
- **Explosion proof**
- **Resistant to hazardous environmental conditions (dust, gas, water)**
- **Light weight and compact dimensions**
- **High density**
- **The speed and torque can be regulated by the air pressure or airflow**
- **Suitable for use in sterile environmental conditions**

Modifying the power of an Air Motor

There are two methods of altering the power of an air motor: Throttling or pressure regulation. The best approach depends on the conditions of the individual application.

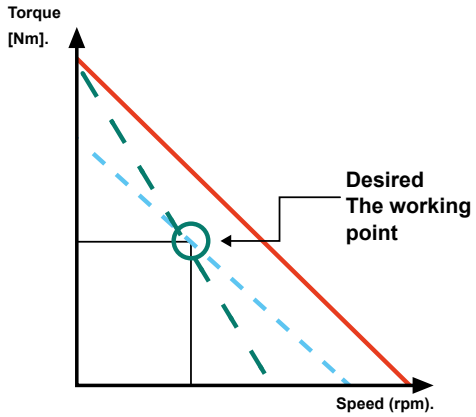

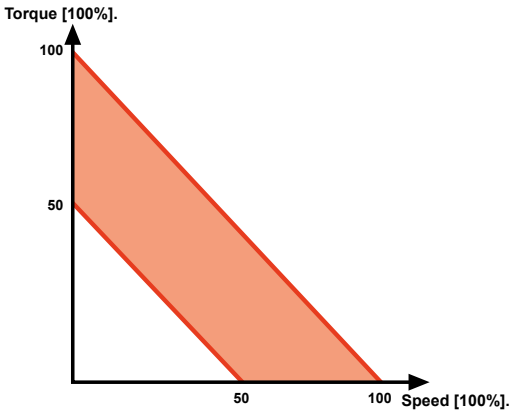

When selecting an air motor for a specific application, the first step is to establish the 'working point'. This is the combination of the desired operating speed for the motor and the torque required at that point.

The free speed and torque can be reduced by up to half on Chicago Pneumatic motors. The air motor can be operated at any point in the color-coded area.

Throttling

A throttle valve is normally installed in the air inlet of the motor, although it can also be installed at the air outlet. The advantage of throttling at the inlet is the reduction in compressed air consumption. A slightly higher starting torque remains when the outlet is throttled. If the motor speed is to be lowered while maintaining the maximum starting torque, throttling is the best way to change the motor power.

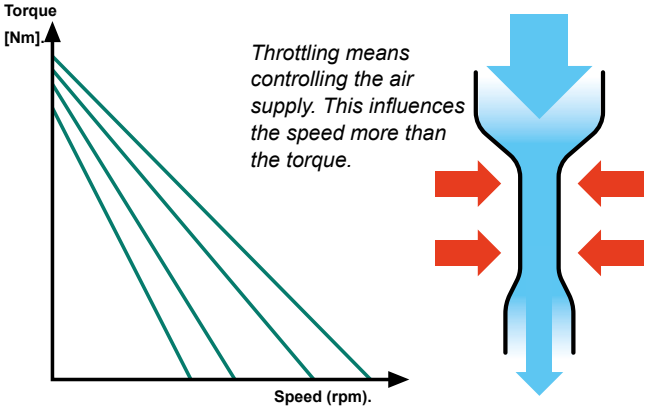

Throttling at the air inlet	Throttling at the air outlet
… reduces the speed	… reduces the speed
… reduces air consumption	… increases air consumption
… reduces the starting torque	… maintains a good starting torque
… may limit functional stability	… maintains stability

Pressure regulation

If a pressure regulator is used, it is always fitted into the air inlet of the motor. A pressure regulator is suitable if the stall torque is to be changed but a high starting torque is less important.

Motor power with varying air pressure

All power curves for Chicago Pneumatic air motors have an input pressure of 6.3 bar. For other pressures, the power curves must be recalculated. To do this, the motor data at 6.3 bar must be multiplied by a correction factor. This factor is shown on the right in table 1.

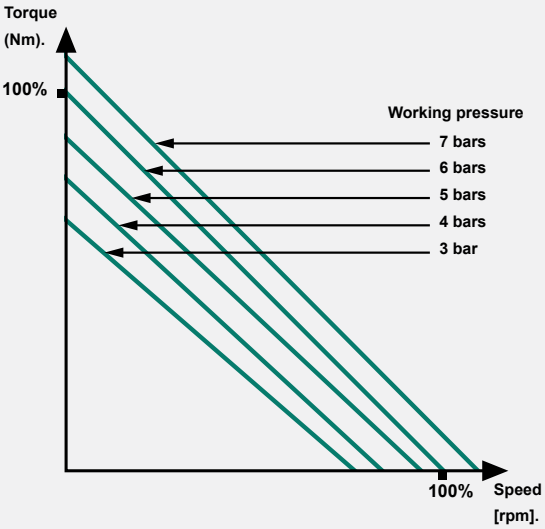

See table 1

Example 1

Let's take a non-reversible motor that is supposed to run at a speed of 300 rpm and deliver a torque of 10 Nm. How do you choose the most suitable motor for this application?

1. In this example, the required power $P = \frac{\pi \times \text{torque} \times \text{speed}}{30} = \frac{3.14 \times 10 \times 300}{30} = 314$ W (0.314 kW)
2. Now you choose a motor with a suitable power level from the catalog. In this case, we take an M39 (with 0.39 kW).
3. Now let's look at the power curves for each motor variant from the M39 series and choose the one whose maximum power comes closest to the operating point.
4. The model M39-520 is best suited for these requirements because we can then work at a speed above the maximum power point, resulting in a higher starting torque and a more stable speed.

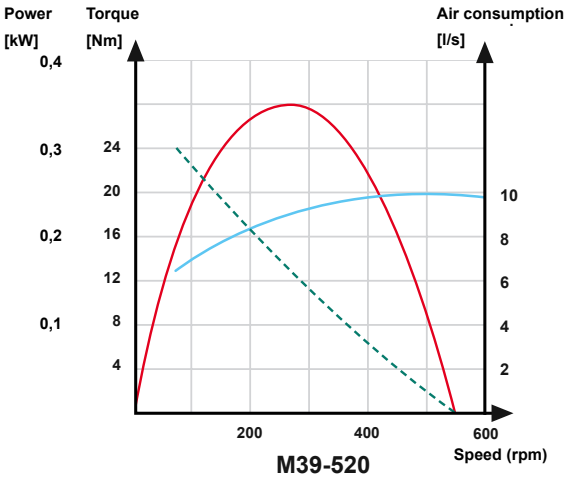

5. To check the selection, the operating point should be transferred to the power diagram shown in the Chicago Pneumatic catalog.

- 1 Find the line with the suitable motor speed.
- 2 & 3 Transfer the desired torque and speed to the diagram.
- 4 The two curves should intersect below the speed/ torque curve

When the operating point is drawn, it is often found that the motor needs to be adjusted slightly so that the operating point is on the power curve. This can be achieved in two ways: By changing the air supply or changing the air pressure.

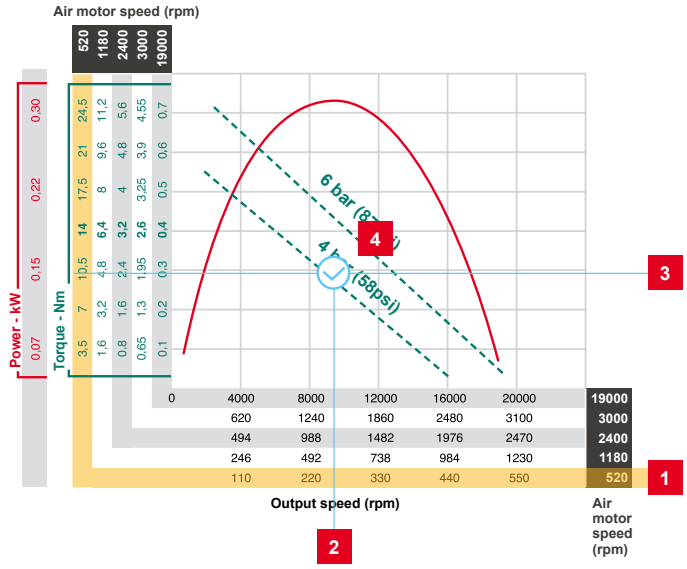

Table 1

Correction factors					
Air Pressure		Performance	Speed	Power torque	Air consumption
(Bar)	(Psi)				
7	101	1.13	1.01	1.09	1.11
6	87	0.94	0.99	0.95	0.96
5	73	0.71	0.93	0.79	0.77
4	58	0.51	0.85	0.63	0.61
3	44	0.33	0.75	0.48	0.44

Differences between Air Motors

Standard air motors



Standard air motors are compact, lightweight and available for a variety of speed and torque requirements.

They are suitable for installation in hand-held and other industrial devices.

Stainless steel air motors



Stainless steel air motors are suitable for applications in corrosive environments.

This includes the food and chemical industries.

Low-speed air motors



With the low speed range, we offer a complete, low-cost solution for applications requiring a low speed and low torque.

The air consumption is relatively constant regardless of the applied load.

Air Motor series overview



	M16	M25	M39	M84	M180	M2501	M3901	M8401	2H410
References	11	32	28	27	10	8	7	6	5
Oil-free	✔	✔	✔	✗	✗	✔	✔	✗	✗
Atex	✔	✔	✔	✔	✔	✔	✔	✔	✔
stainless steel	✔	✔	✔	✗	✗	✔	✗	✗	✗
Exhaust									
Shaft	Keyed	Keyed & Threaded	Keyed & Threaded & Squarre	Keyed & Threaded	Keyed	Keyed & Threaded	Threaded	Keyed	Hex
Reversible	✔	✔	✔	✔	✔	✔	✔	✔	✔

Select your Air Motor

Description of abbreviations:

M R 16 12300 K S L SI + Option

- M — Air vane motor
- R — without R = non reversible; R = reversible
- 16 — Power in kW: 16 = 0.10–0.16; 25 & 2501 = 0.16–0.25; 39 & 3901 = 0.25–0.39; 84 & 8401 = 0.58–0.84; 180 = 1.40–1.83
- 12300 — Speed
- K — K = keyed spindle; T = threaded spindle; S = square
- S — S = stainless steel
- L — L = oil-free
- SI — SI = Muffler included
- + Option — Atex; Fixation; Special mounting

The performance of an air motor

The performance of an air motor depends on the air pressure and the air flow to the tool. It is possible to control the torque and the output speed of the air motor by changing the air pressure or the air flow. The air motor achieves maximum output at an air pressure of 6.3 bar.

The most important technical details for air motors are:

- **Power,** watts (W)
- **Speed at maximum power,** rpm
- **Free speed, rpm**
- **Torque at maximum power,** Nm
- **Starting torque,** Nm
- **Stall torque,** Nm
- **Air consumption at maximum output,** l/s

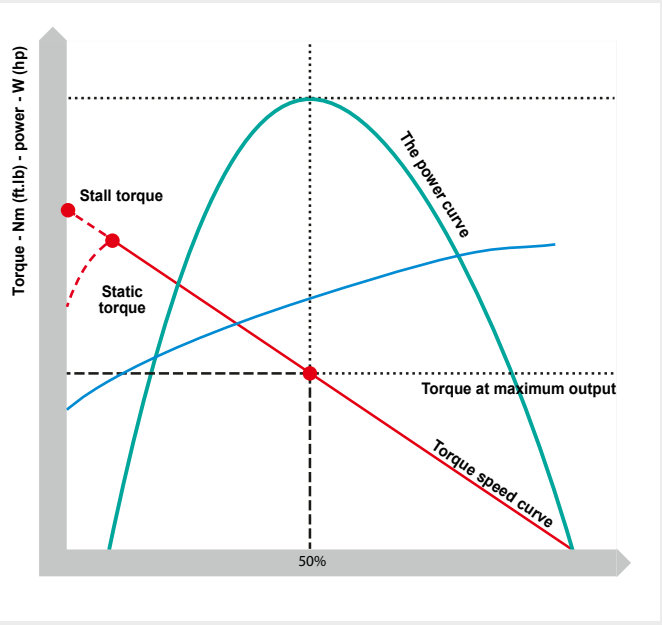

Some applications require a torque specification down to a standstill. This can be calculated by multiplying the torque at maximum output by two. To set the maximum torque down to a standstill, the correct air pressure is required.

M16-KL series

Oil-free | 0.11–0.16 kW | 0.15–0.21 hp



EX certification according to the ATEX directive
II 2G T4 IIC D110°C* or II 2G T5 IIC D85°C**

The EX certification is only valid for use in a holder with a maximum ambient temperature of +40°C (104°F)

Data at a working pressure of 6.3 bars/ 90 PSI

model	Item number	Maximum output power		Torque at max output power		Starting torque		Stall torque		Free speed	Air consumption at rated power		weight	
		Kw	hp	Nm	ft.lb	Nm	ft.lb	Nm	ft.lb	rpm	l/s	CFM	kg	lb
Non reversible - keyed spindle														
M16-19500-KL-ATEX*	**205 147 892 4**	0.16	0.21	0.17	0.13	0.29	0.21	0.34	0.25	19500	4	8.5	0.3	0.66
M16-4800-KL-ATEX**	**205 147 893 4**	0.16	0.21	0.7	0.52	1.23	0,91	1.4	1.03	4800	4	8.5	0.3	0.66
M16-2900-KL-ATEX**	**205 147 894 4**	0.16	0.21	1.15	0.85	2.0	1.48	2.3	1.7	2900	4	8.5	0.3	0.66
Reversible - keyed spindle														
MR16-3400-KL-ATEX**	**205 147 898 4**	0.11	0.15	0.62	0.46	1.01	0.74	1.24	0,91	3400	3.6	7.6	0.37	0.82
MR16-2000-KL-ATEX**	**205 147 899 4**	0.11	0.15	1.03	0.76	1.67	1.23	2.1	1.5	2000	3.6	7.6	0.37	0.82
MR16-800-KL-ATEX**	**205 147 900 4**	0.11	0.15	2.6	1.92	4.2	3.1	5.2	3.8	800	3.6	7.6	0.4	0.88
MR16-490-KL-ATEX**	**205 147 901 4**	0.11	0.15	4.3	3.2	6.9	5.1	8.6	6.3	490	3.6	7.6	0.4	0.88

- When motors are operated with 100% dry air and without lubrication, the power may be reduced by 5–15% at maximum power.
- To optimize the service life of an oil-free motor, use lubricated air if the application allows it

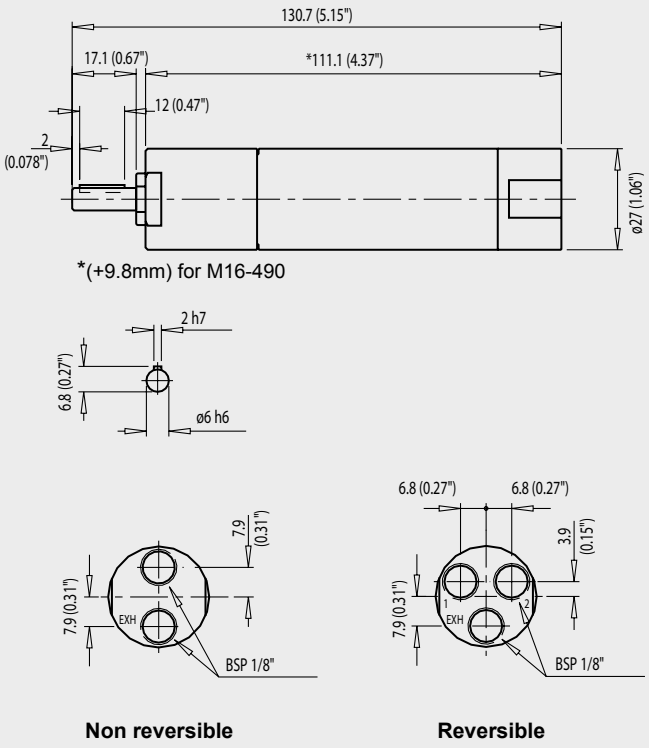

Non reversible **Reversible**

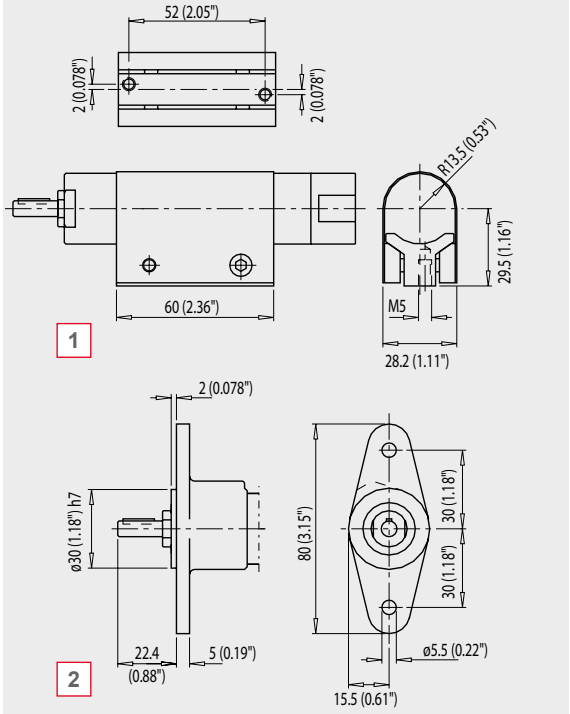

Optional accessories

model	Part number
1 Mounting foot	**205 053 649 3**
2 Mounting flange	**205 053 640 3**
Other accessories: See page 28	

* II 2G T4 IIC D110°C
** II 2G T5 IIC D85°C

M16-KL data for a working pressure of 6.3 bars / 90 PSI
non reversible

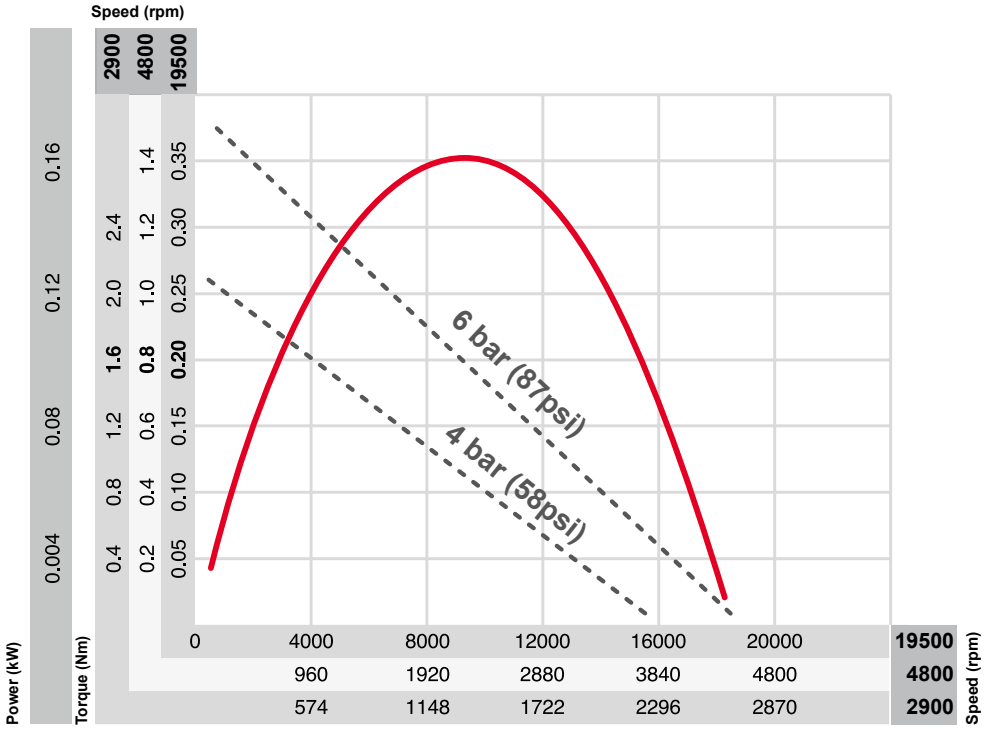

MR16-KL data for a working pressure of 6.3 bars / 90 PSI
reversible

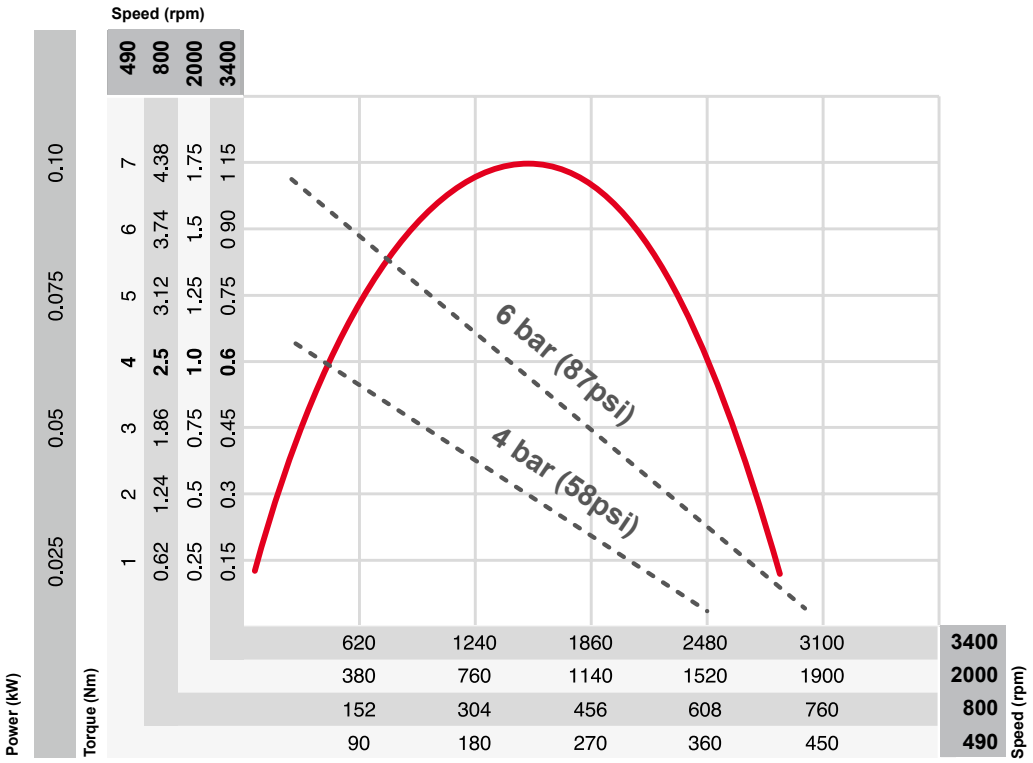

M16-KSL series

0.11–0.16 kW | 0.15–0.21 hp | stainless steel



EX certification according to ATEX directive
II 2G T4 IIC D110°C* or II 2G T5 IIC D85°C**

The EX certification is only valid for use in a holder with a maximum ambient temperature of +40°C (104°F)

Data at a working pressure of 6.3 bars/ 90 PSI

model	Item number	Maximum output power		Torque at max output power		Starting torque		Stall torque		Free speed	Air consumption at rated power		weight	
		Kw	hp	Nm	ft.lb	Nm	ft.lb	Nm	ft.lb	rpm	l/s	CFM	kg	lb
Non reversible - keyed spindle														
M16-19500-KSL-ATEX*	**205 147 902 4**	0.16	0.21	0.17	0.13	0.29	0.21	0.34	0.25	19500	4	8.5	0.3	0.66
M16-4800-KSL-ATEX**	**205 147 903 4**	0.16	0.21	0.7	0.52	1.23	0,91	1.4	1.03	4800	4	8.5	0.3	0.66
M16-700-KSL-ATEX**	**205 147 906 4**	0.16	0.21	4.8	3.5	8.5	6.3	9.6	7.1	700	4	8.5	0.4	0.88
Reversible - keyed spindle														
MR16-490-KSL-ATEX**	**205 147 911 4**	0.11	0.15	4.3	3.2	6.9	5.1	8.6	6.3	490	3.6	7.6	0.4	0.88

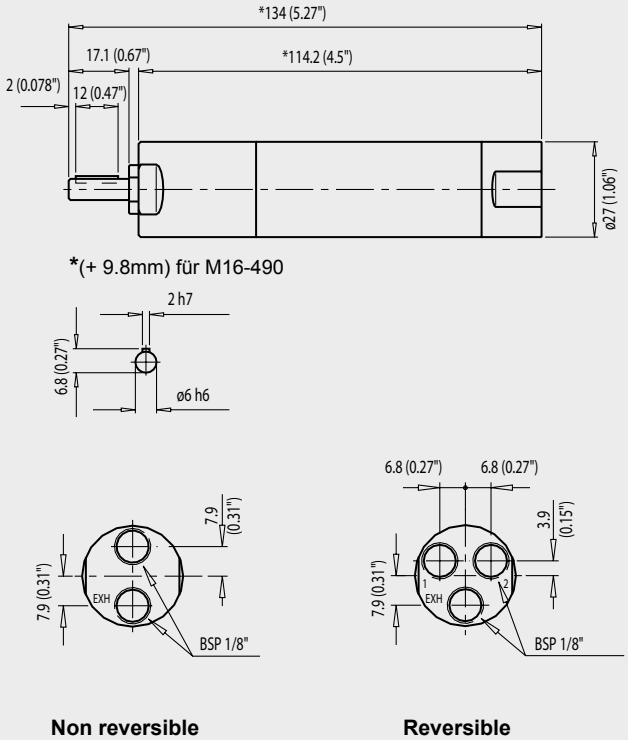

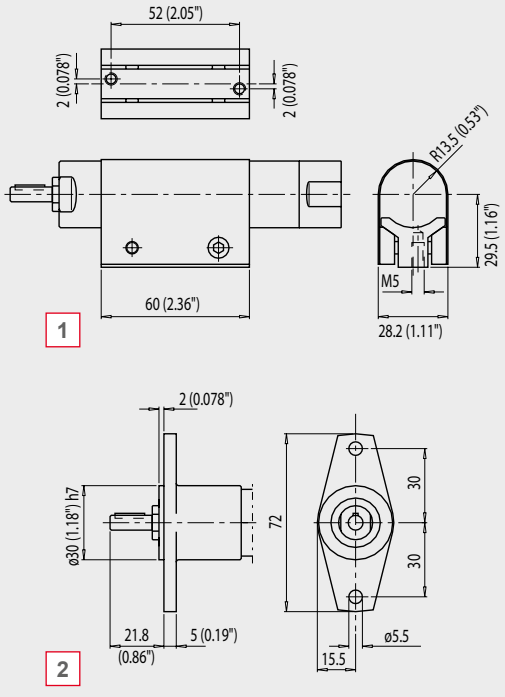

Optional accessories

model	Part number
1 Mounting foot	**205 053 653 3**
2 Mounting flange	**205 053 645 3**
Other accessories: See page 28	

* II 2G T4 IIC D110°C
** II 2G T5 IIC D85°C

M16-KSL data for a working pressure of 6.3 bars / 90 PSI
non reversible

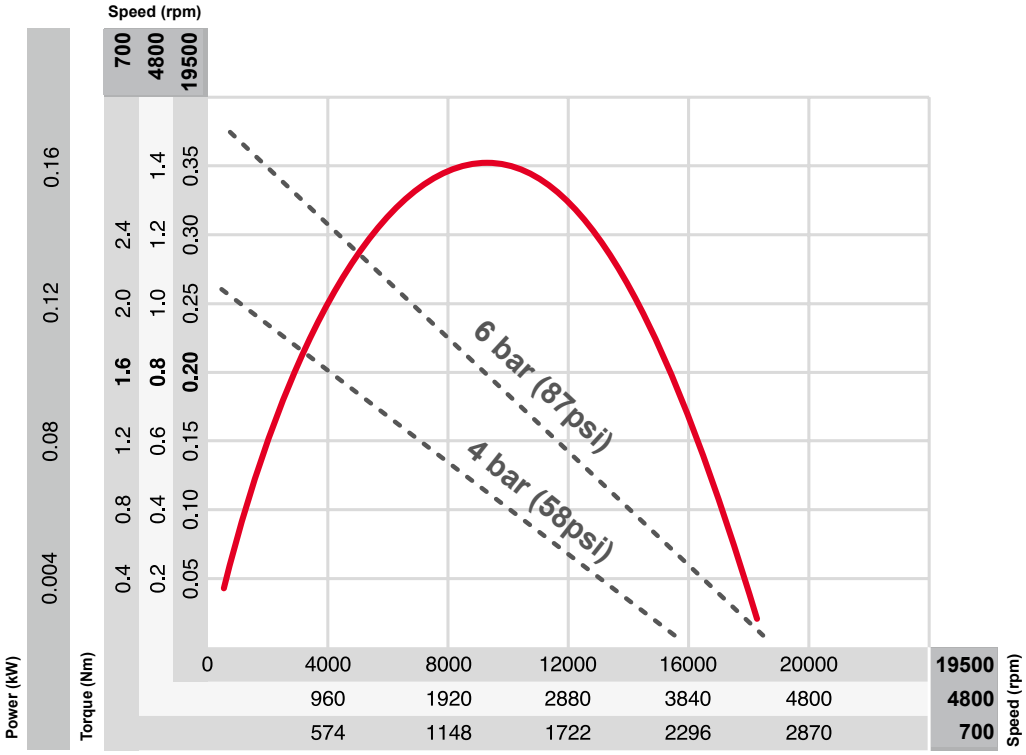

MR16-KSL data for a working pressure of 6.3 bars / 90 PSI
reversible

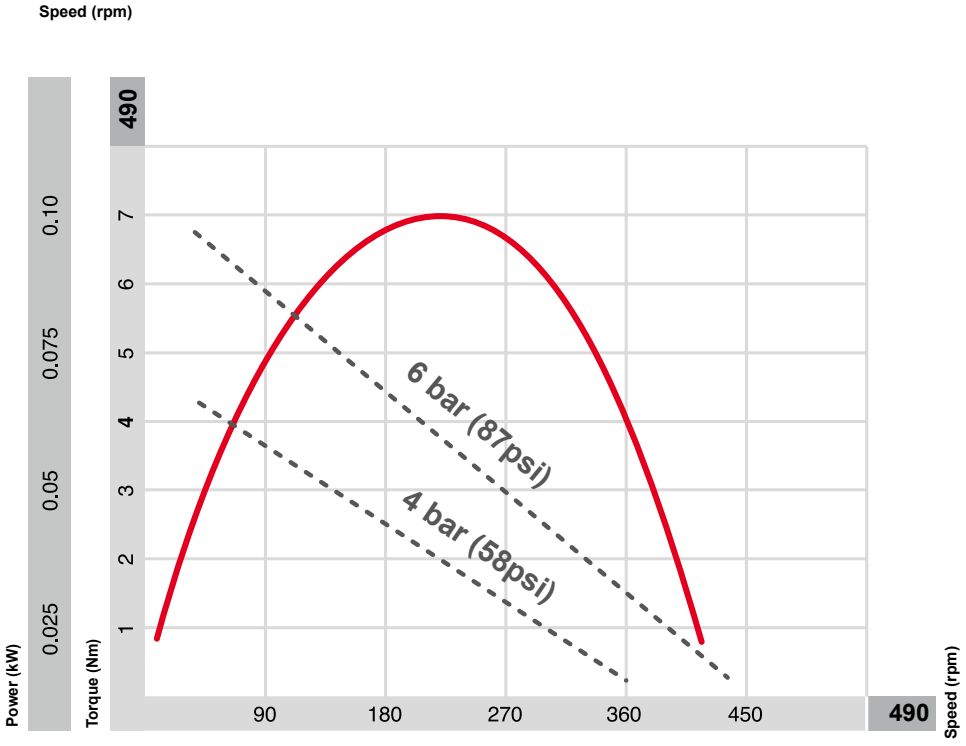

M25-KL/TL series

Oil-free | 0.16–0.27 kW | 0.21–0.36 hp



EX certification according to ATEX directive
II 2G T4 IIC D110°C* or II 2G T5 IIC D85°C**
The EX certification is only valid for use in a holder with a maximum ambient temperature of +40°C (104°F)

Data at a working pressure of 6.3 bars/ 90 PSI

model	Item number	Maximum output power		Torque at max output power		Starting torque		Stall torque		Idle speed	Air consumption at rated power		weight	
		Kw	hp	Nm	ft.lb	Nm	ft.lb	Nm	ft.lb	rpm	l/s	CFM	kg	lb
Non reversible (clockwise direction) - keyed spindle														
M25-19500-KL-ATEX*	**205 147 822 4**	0.27	0.36	0.27	0.2	0.51	0.38	0.54	0.4	19500	5.3	11.2	0.55	1.21
M25-4700-KL-ATEX**	**205 147 823 4**	0.27	0.36	1.2	0.89	2.3	1.7	2.4	1.8	4700	5.3	11.2	0.55	1.21
M25-3550-KL-ATEX**	**205 147 824 4**	0.27	0.36	1.6	1.2	3.1	2.3	3.2	2.4	3550	5.3	11.2	0.55	1.21
M25-2100-KL-ATEX**	**205 147 825 4**	0.27	0.36	2.7	2.0	5.1	3.8	5.4	4.0	2100	5.3	11.2	0.55	1.21
M25-1040-KL-ATEX**	**205 147 826 4**	0.26	0.35	5.3	3.9	10.0	7.4	10.6	7.8	1040	5.3	11.2	0.75	1.65
M25-770-KL-ATEX**	**205 147 827 4**	0.26	0.35	7.1	5.2	13.5	10.0	14.2	10.5	770	5.3	11.2	0.75	1.65
M25-480-KL-ATEX**	**205 147 828 4**	0.26	0.35	11.8	8.7	22.0	16.2	23.6	17.4	480	5.3	11.2	0.75	1.65
Non reversible (clockwise rotation) - threaded spindle														
M25-19500-TL-ATEX*	**205 147 829 4**	0.27	0.36	0.27	0.2	0.51	0.38	0.54	0.4	19500	5.3	11.2	0.55	1.21
M25-4700-TL-ATEX**	**205 147 830 4**	0.27	0.36	1.2	0.89	2.3	1.7	2.4	1.8	4700	5.3	11.2	0.55	1.21
M25-3550-TL-ATEX**	**205 147 831 4**	0.27	0.36	1.6	1.2	3.1	2.3	3.2	2.4	3550	5.3	11.2	0.55	1.21
M25-2100-TL-ATEX**	**205 147 832 4**	0.27	0.36	2.7	2.0	5.1	3.8	5.4	4.0	2100	5.3	11.2	0.55	1.21
M25-1040-TL-ATEX**	**205 147 833 4**	0.26	0.35	5.3	3.9	10.0	7.4	10.6	7.8	1040	5.3	11.2	0.75	1.65
M25-770-TL-ATEX**	**205 147 834 4**	0.26	0.35	7.1	5.2	13.5	10.0	14.2	10.5	770	5.3	11.2	0.75	1.65
M25-480-TL-ATEX**	**205 147 835 4**	0.26	0.35	11.8	8.7	22.0	16.2	23.6	17.4	480	5.3	11.2	0.75	1.65
Reversible - keyed spindle														
MR25-13100-KL-ATEX*	**205 147 836 4**	0.16	0.21	0.24	0.18	0.32	0.24	0.48	0.35	13100	5.0	10.6	0.55	1.21
MR25-2800-KL-ATEX**	**205 147 837 4**	0.16	0.21	1.1	0.81	1.4	1.0	2.2	1.6	2800	5.0	10.6	0.55	1.21
MR25-2100-KL-ATEX**	**205 147 838 4**	0.16	0.21	1.4	1.0	1.9	1.4	2.8	2.1	2100	5.0	10.6	0.55	1.21
MR25-1300-KL-ATEX**	**205 147 839 4**	0.16	0.21	2.4	1.8	3.2	2.4	4.8	3.5	1300	5.0	10.6	0.55	1.21
MR25-640-KL-ATEX**	**205 147 840 4**	0.16	0.21	4.7	3.5	6.3	4.6	9.4	6.9	640	5.0	10.6	0.75	1.65
MR25-480-KL-ATEX**	**205 147 841 4**	0.16	0.21	6.3	4.6	8.5	6.3	12.6	9.3	480	5.0	10.6	0.75	1.65
MR25-290-KL-ATEX**	**205 147 842 4**	0.16	0.21	10.5	7.7	14.0	10.3	21.0	15.5	290	5.0	10.6	0.75	1.65
M25 low-speed motors														
Reversible - keyed spindle														
M25-180-KL-ATEX**	**205 148 172 4**	0.26	0.35	9	6.6					180	5.0	10.6	0.55	1.21
MR25-100-KL-ATEX**	**205 148 132 4**	0.16	0.21	9	6.6					100	5.0	10.6	0.55	1.21
M2501 - Standard														
Reversible - keyed spindle														
MR2501-640-KL-ATEX**	**615 178 095 0**	0.16	0.21	4.7	3.5	6.3		9.4	7.0	640	5.0	10.6	0.75	1.65
M2501 - Standard **NOT** EX-certified														
Non reversible (clockwise rotation) - threaded spindle														
M2501-3500-TL	**205 147 997 4**	0.27	0.36	1.5	1.1	3	2.2	0.54	0.4	3500	5.3	11.2	0.55	1.21
M2501-1080-TL	**205 147 998 4**	0.24	0.32	4.3	3.1	8.6	6.2	2.4	1.8	1080	5.3	11.2	0.55	1.21
M2501-930-TL	**205 148 135 4**	0.25	0.33	5.9	4.3	11.8	8.7	3.2	2.4	930	5.3	11.2	0.55	1.21
M2501-550-TL	**205 148 137 4**	0.24	0.32	9.9	7.1	19.8	4.2	5.4	4.0	550	5.3	11.2	0.55	1.21
M2501-5500-TL	**205 148 138 4**	0.25	0.32	1.2	0.9	2.4	1.8	10.6	7.8	5500	5.3	11.2	0.75	1.65
M2501-2130-TL	**205 148 174 4**	0.23	0.31	7.1	1.5	4.2	3.1	14.2	10.5	2130	5.3	11.2	0.75	1.65

- When motors are operated with 100% dry air and without lubrication, the power may be reduced by 5–15% at maximum power.
- To optimize the service life of an oil-free motor, use lubricated air if the application allows it

* II 2G T4 IIC D110°C
** II 2G T5 IIC D85°C

INCLUDED

M25-XXXX-TL

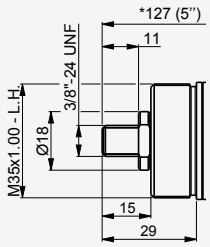

M25-XXXX-KL

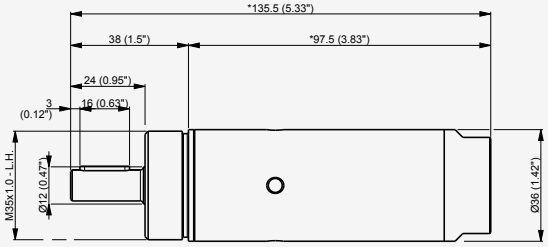

* (+31mm) for M25-1040, M25-770, M25-480

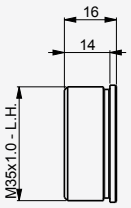

1

MR25-XXXX-KL

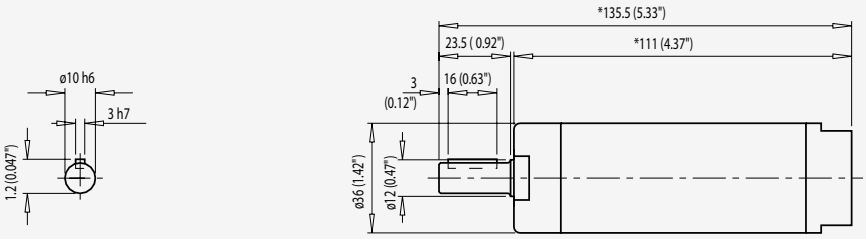

*(+31mm) MR25-650, 450, 280

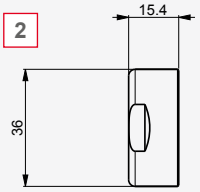

2

Non reversible

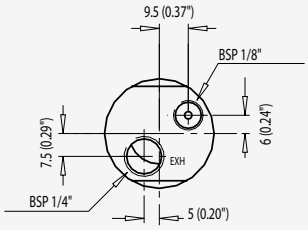

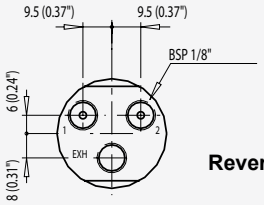

Reversible

OPTIONAL

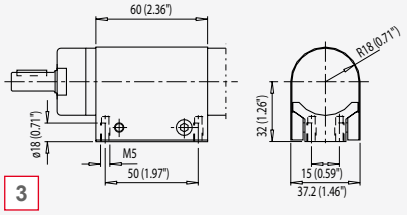

3

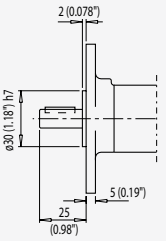

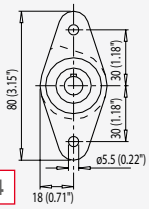

4

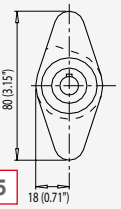

5

9

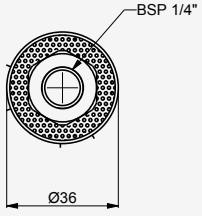

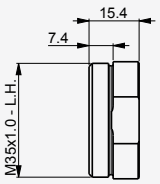

6

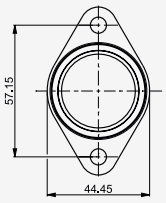

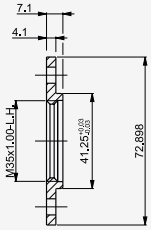

7

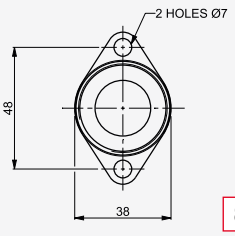

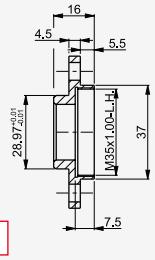

8

Optional accessories

model	Part number
3 Mounting Foot	**205 053 646 3**
4 Mounting flange with holes (M/MR vers.)	**205 054 062 3**
5 Mounting flange without holes (M/MR vers.)	**205 053 639 3**
6 Front nut with thread (short thread)	**205 055 024 3**
7[1] Mounting flange with holes (M vers.)	**286423**
8[1] Mounting flange with holes (M vers.)	**441653**
9 Coaxial outlet for M25	**205 055 023 3**
Other accessories: See page 28	

Included in Scope of Supply

model	Part number
1 Front nut with thread (M version)	**205 055 778 3**
2 Front nut (MR version)	**205 053 654 3**

[1]To be mounted directly on the front nut (2050550243)

M25-KL data for a working pressure of 6.3 bars / 90 PSI
non reversible

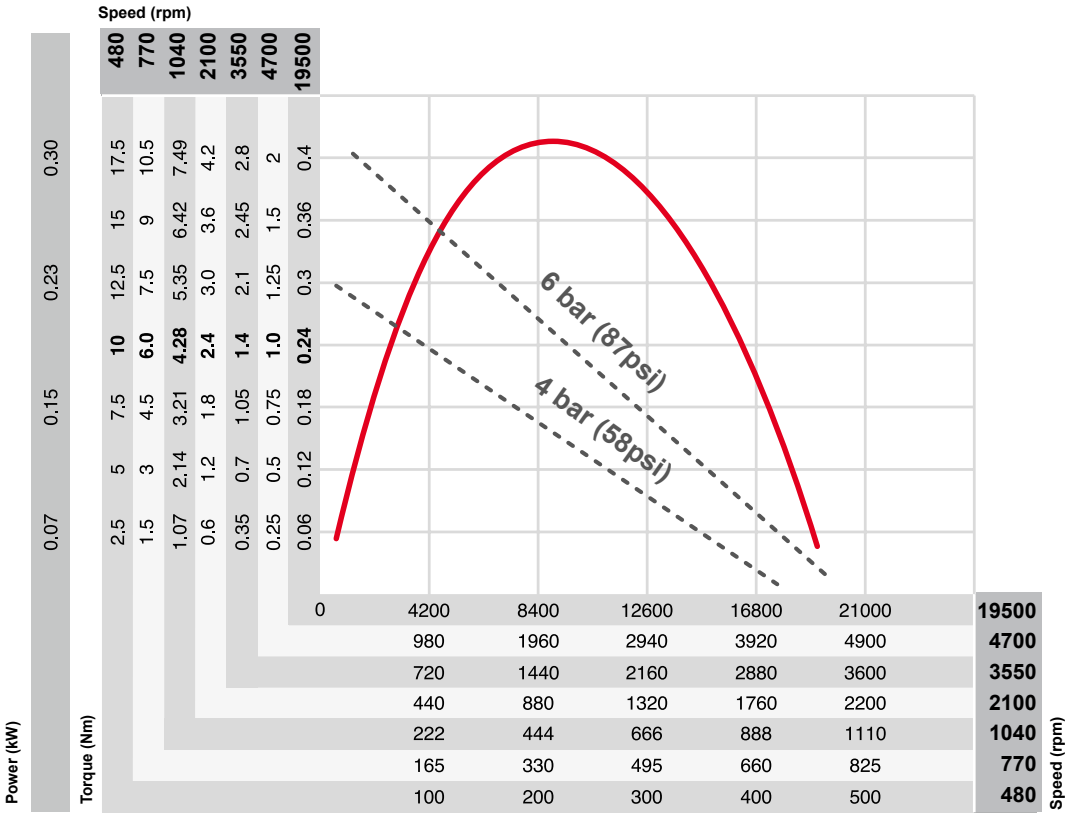

M25-KL data for a working pressure of 6.3 bars / 90 PSI
reversible

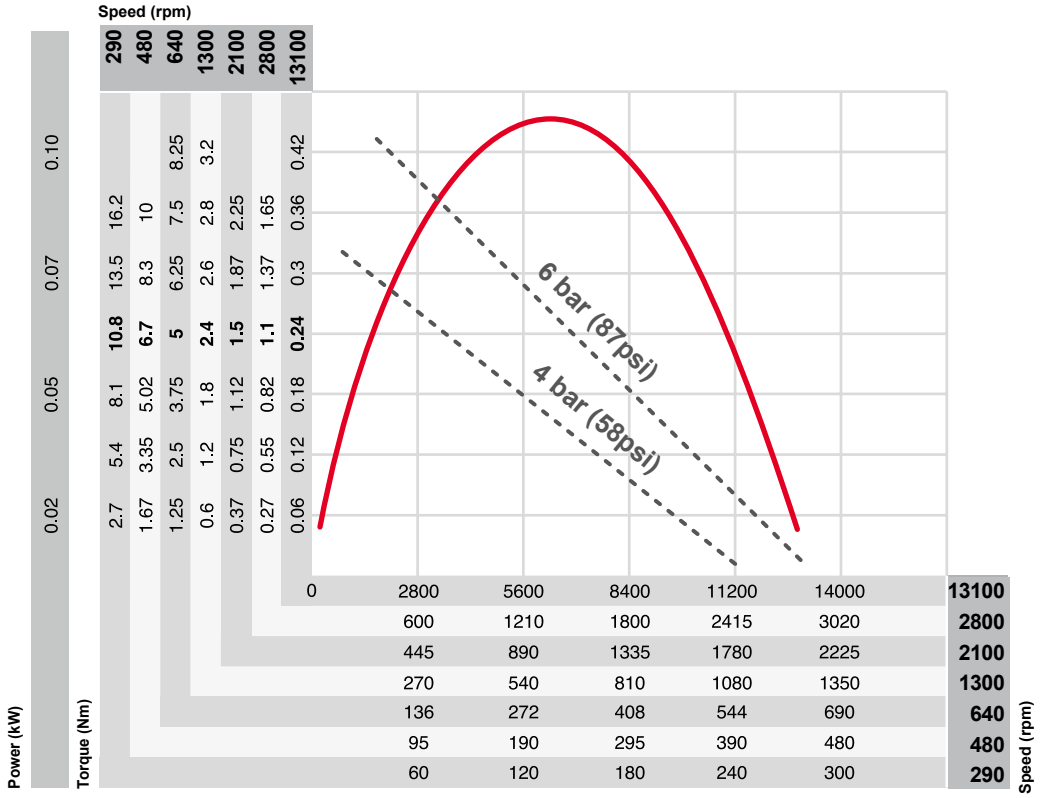

AIR MOTORS



M25-KSL series

Oil-free | 0.16–0.27 kW | 0.21–0.36 hp stainless steel



EX certification according to ATEX directive
II 2G T4 IIC D110°C* or II 2G T5 IIC D85°C**
The EX certification is only valid for use in a holder with a maximum ambient temperature of +40°C (104°F)

Data at a working pressure of 6.3 bars/ 90 PSI

model	Item number	Maximum output power		Torque at max output power		Starting torque		Stall torque		Free speed	Air consumption at rated power		weight	
		Kw	hp	Nm	ft.lb	Nm	ft.lb	Nm	ft.lb	rpm	l/s	CFM	kg	lb
Non reversible														
M25-19500-KSL-ATEX*	**205 147 843 4**	0.27	0.36	0.27	0.2	0.51	0.38	0.54	0.4	19500	5.3	11.2	0.63	1.39
M25-4700-KSL-ATEX**	**205 147 844 4**	0.27	0.36	1.2	0.89	2.3	1.7	2.4	1.8	4700	5.3	11.2	0.63	1.39
M25-2100-KSL-ATEX**	**205 147 846 4**	0.27	0.36	2.7	2.0	5.1	3.8	5.4	4.0	2100	5.3	11.2	0.63	1.39
M25-770-KSL-ATEX**	**205 147 848 4**	0.26	0.35	7.1	5.2	13.5	10.0	14.2	10.5	770	5.3	11.2	0.83	1.83
M2501-5500-KSL	**205 148 133 4**	0.26	0.71	9.9	7.1	2.3	1.7	19.8	14.2	5500	5.3	11.2	0.71	1.56
Reversible														
MR25-2800-KSL-ATEX**	**205 147 851 4**	0.16	0.21	1.1	0.81	1.4	1.0	2.2	1.6	2850	5.0	10.6	0.63	1.39
MR25-1300-KSL-ATEX**	**205 147 853 4**	0.16	0.21	2.4	1.8	3.2	2.4	4.8	3.5	1300	5.0	10.6	0.63	1.39
MR25-640-KSL-ATEX**	**205 147 854 4**	0.16	0.21	4.7	3.5	6.3	4.6	9.4	6.9	640	5.0	10.6	0.83	1.83
MR25-480-KSL-ATEX**	**205 147 855 4**	0.16	0.21	6.3	4.6	8.5	6.3	12.6	9.3	480	5.0	10.6	0.83	1.83
MR25-290-KSL-ATEX**	**205 147 856 4**	0.16	0.21	10.5	7.7	14.0	10.3	21.0	15.5	290	5.0	10.6	0.83	1.83

- When motors are operated with 100% dry air and without lubrication, the power may be reduced by 5–15% at maximum power.
- To optimize the service life of an oil-free motor, use lubricated air if the application allows it

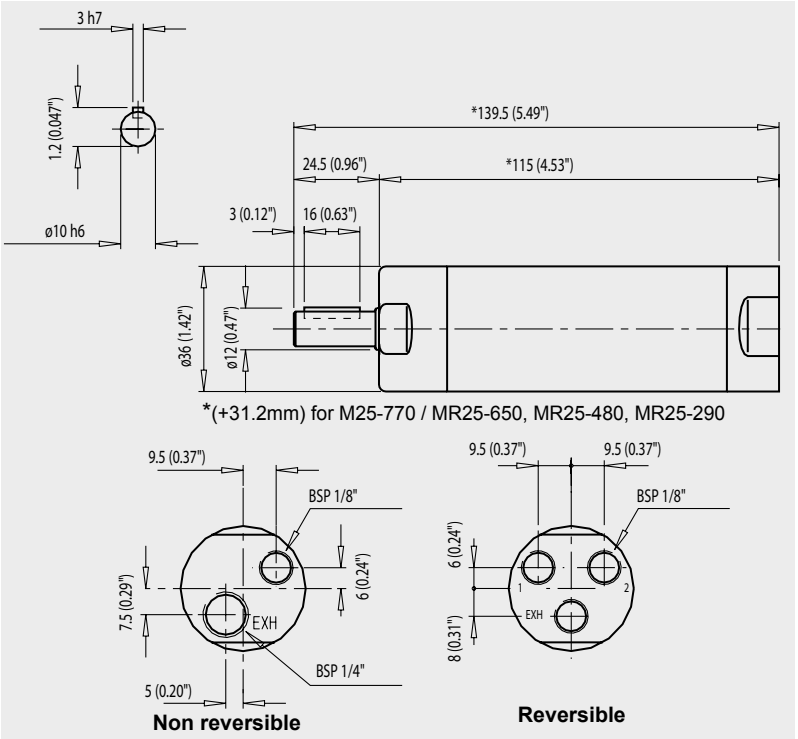

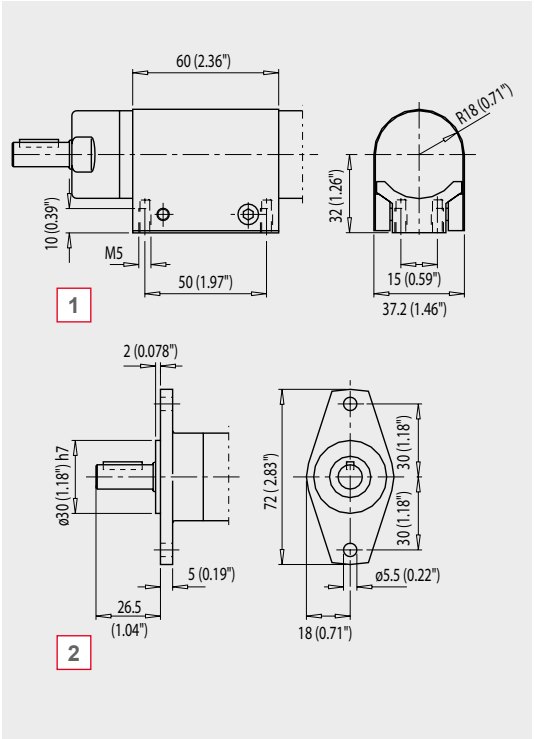

Optional accessories

model	Part number
1 Mounting foot	**205 053 652 3**
2 Mounting flange	**205 053 644 3**
Other accessories: See page 28	

* II 2G T4 IIC D110°C
** II 2G T5 IIC D85°C

M25-KSL data for a working pressure of 6.3 bars / 90 PSI
non reversible

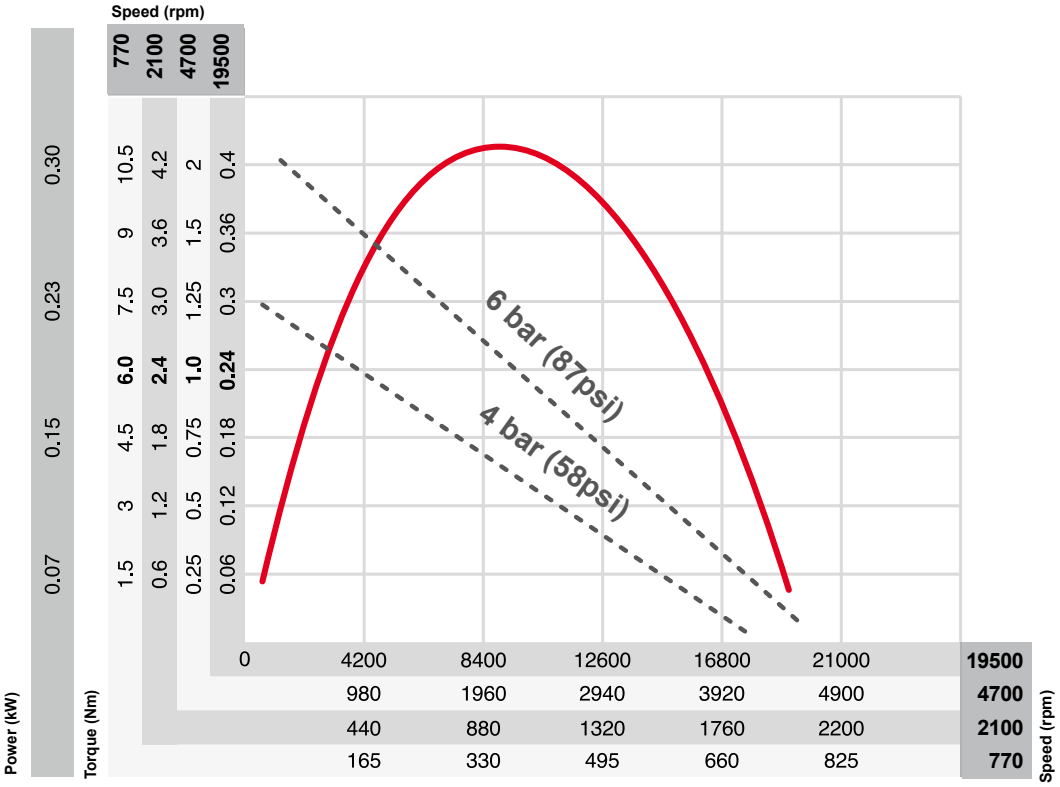

M25-KSL data for a working pressure of 6.3 bars / 90 PSI
reversible

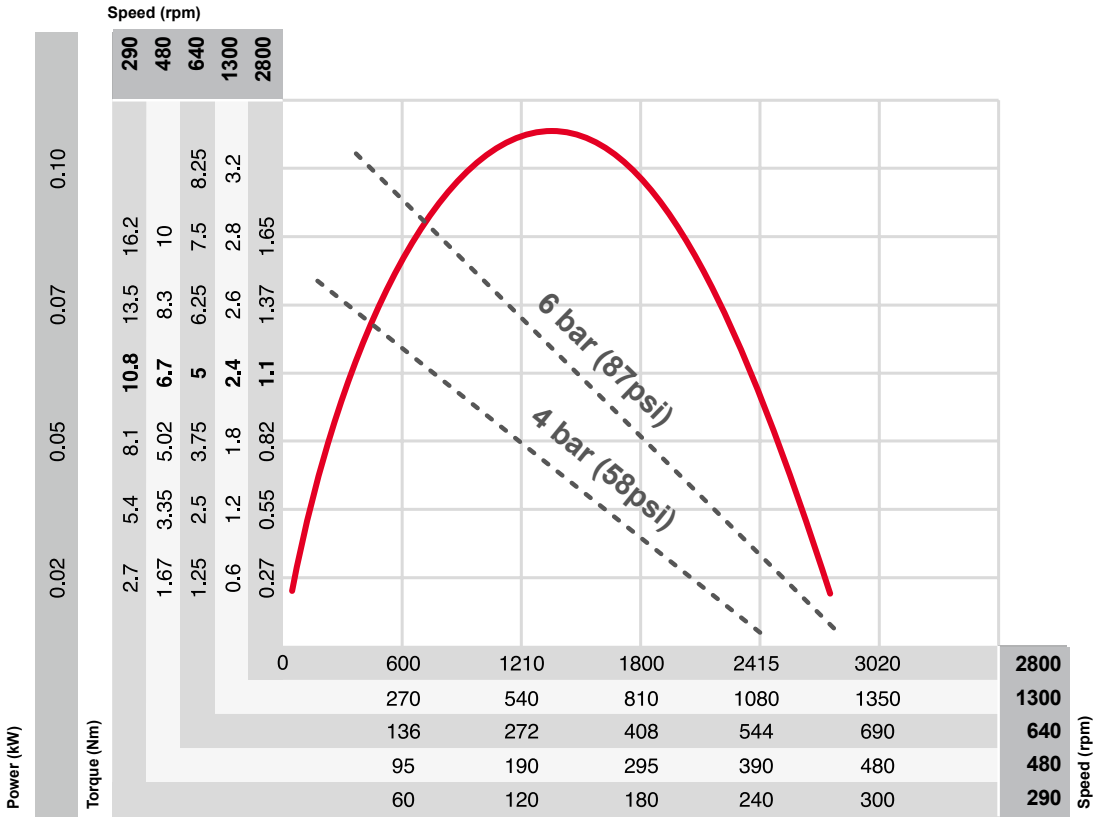

M39-KL/TL series

Oil-free | 0.23–0.39 kW | 0.34–0.52 hp



EX certification according to ATEX directive
II 2G T4 IIC D110°C* or II 2G T5 IIC D85°C**

The EX certification is only valid for use in a holder with a maximum ambient temperature of +40°C (104°F)

Data at a working pressure of 6.3 bars/ 90 PSI

model	Item number	Maximum output power		Torque at max output power		Starting torque		Stall torque		Free speed	Air consumption at rated power		weight	
		Kw	hp	Nm	ft.lb	Nm	ft.lb	Nm	ft.lb	rpm	l/s	CFM	kg	lb
Non reversible - keyed spindle														
M39-19000-KL-ATEX*	**205 147 857 4**	0.39	0.52	0.4	0.3	0.76	0.56	0.8	0.59	19000	8.1	17.2	0.75	1.65
M39-3000-KL-ATEX**	**205 147 859 4**	0.39	0.52	2.6	1.9	4.9	3.6	5.2	3.8	3000	8.1	17.2	0.75	1.65
M39-2400-KL-ATEX**	**205 147 860 4**	0.39	0.52	3.2	2.4	6.1	4.5	6.4	4.7	2400	8.1	17.2	0.75	1.65
M39-1180-KL-ATEX**	**205 147 861 4**	0.38	0.51	6.4	4.7	12.0	8.9	12.8	9.4	1180	8.1	17.2	1.02	2.25
M39-520-KL-ATEX**	**205 147 863 4**	0.38	0.51	14.2	10.5	26.0	19.2	28.0	21.0	520	8.1	17.2	1.02	2.25
Non reversible - threaded spindle														
M39-19000-TL-ATEX*	**205 147 864 4**	0.39	0.52	0.4	0.3	0.76	0.56	0.8	0.59	19000	8.1	17.2	0.75	1.65
M39-5350-TL-ATEX*	**205 147 865 4**	0.38	0.52	1.4	1.0	2.7	2.0	2.8	2.1	5350	8.1	17.2	0.75	1.65
M39-3000-TL-ATEX*	**205 147 866 4**	0.38	0.52	2.6	1.9	4.9	3.6	5.2	3.8	3000	8.1	17.2	0.75	1.65
M39-2400-TL-ATEX**	**205 147 867 4**	0.39	0.52	3.2	2.4	6.1	4.5	6.4	4.7	2400	8.1	17.2	0.75	1.65
M39-1180-TL-ATEX**	**205 147 868 4**	0.38	0.51	6.4	4.7	12.0	8.9	12.8	9.4	1180	8.1	17.2	1.02	2.25
M39-650-TL-ATEX**	**205 147 869 4**	0.38	0.51	11.5	8.5	21.0	15.5	23.0	17.0	650	8.1	17.2	1.02	2.25
M39-520-TL-ATEX**	**205 147 870 4**	0.38	0.51	14.2	10.5	26.0	19.2	28.0	21.0	520	8.1	17.2	1.02	2.25
Reversible														
MR39-13300-KL-ATEX*	**205 147 871 4**	0.25	0.34	0.34	0.25	0.46	0.34	0.68	0.5	13300	7.9	16.8	0.75	1.65
MR39-3800-KL-ATEX**	**205 147 872 4**	0.25	0.34	1.2	0.89	1.6	1.2	2.4	1.8	3800	7.9	16.8	0.75	1.65
MR39-2000-KL-ATEX**	**205 147 873 4**	0.25	0.34	2.2	1.6	3.0	2.2	4.4	3.2	2000	7.9	16.8	0.75	1.65
MR39-1700-KL-ATEX**	**205 147 874 4**	0.25	0.34	2.7	2.0	3.7	2.7	5.4	4.0	1700	7.9	16.8	0.75	1.65
MR39-800-KL-ATEX**	**205 147 875 4**	0.25	0.34	5.4	4.0	7.0	5.2	10.8	8.0	800	7.9	16.8	1.02	2.25
MR39-450-KL-ATEX**	**205 147 876 4**	0.25	0.34	9.8	7.2	12.6	9.3	19.6	14.5	450	7.9	16.8	1.02	2.25
MR39-360-KL-ATEX**	**205 147 877 4**	0.25	0.34	12.1	8.9	15.6	11.5	24.0	17.8	360	7.9	16.8	1.02	2.25
Non reversible - threaded spindle														
M3901-2400-TL-ATEX	**205 148 167 4**	0.39	0.52	3.2	2.4	6.4	4.7	6.4	4.7	2400	8.1	16.8	0.75	1.65
M3901-650-TL-ATEX	**205 148 168 4**	0.38	0.51	11.5	8.5	23	17	23.0	17.0	650	8.1	16.8	1.5	3.31
M3901-520-TL-ATEX	**205 148 169 4**	0.38	0.51	14.2	10.5	28	21	28.0	21.0	520	8.1	16.8	1.02	2.25
M3901-340-TL-ATEX	**205 148 170 4**	0.37	0.50	22.3	16.4	45	33	45.0	33.0	340	8.1	16.8	1.02	2.25
Low-speed/Non reversible- threaded spindle														
M3901-80-TL-ATEX	**205 148 171 4**	0.37	0.50	88	65	176	130	176.0	130.0	80	8.1	16.8	2.6	5.8
M3901-70-TL-ATEX	**205 148 161 4**	0.37	0.50	110	81	220	162	220.0	162.0	70	8.1	16.8	2.6	5.8
Low-speed/Non reversible - threaded spindle NOT EX-certified														
M3901-70-SQ	**205 148 160 4**	0.37	0.5	110	81	220	162	24.0	17.8	70	8.1	16.8	2.6	5.8

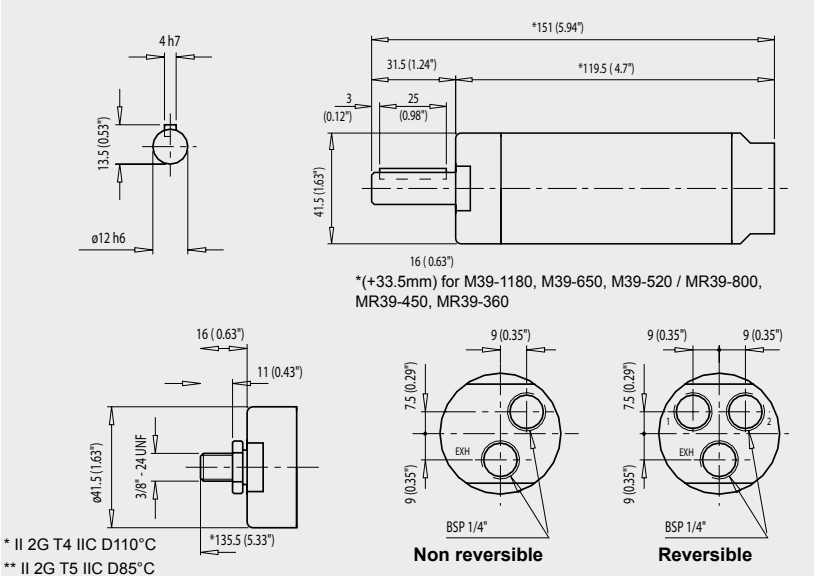

* II 2G T4 IIC D110°C
** II 2G T5 IIC D85°C

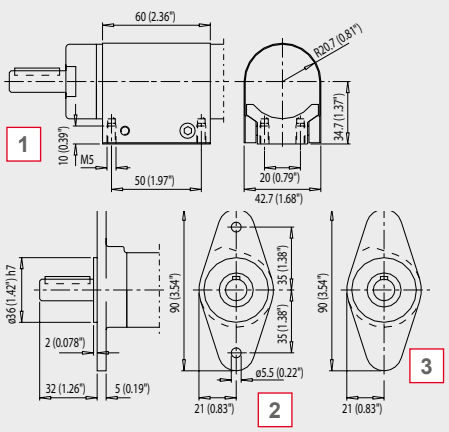

Optional accessories

model	Part number
1 Mounting foot	**205 054 067 3**
2 Mounting flange with holes	**205 054 667 3**
3 Mounting flange without holes	**205 053 638 3**
Other accessories: See page 28	

M39-KL data for an operating pressure of 6.3 bars / 90 PSI
non reversible

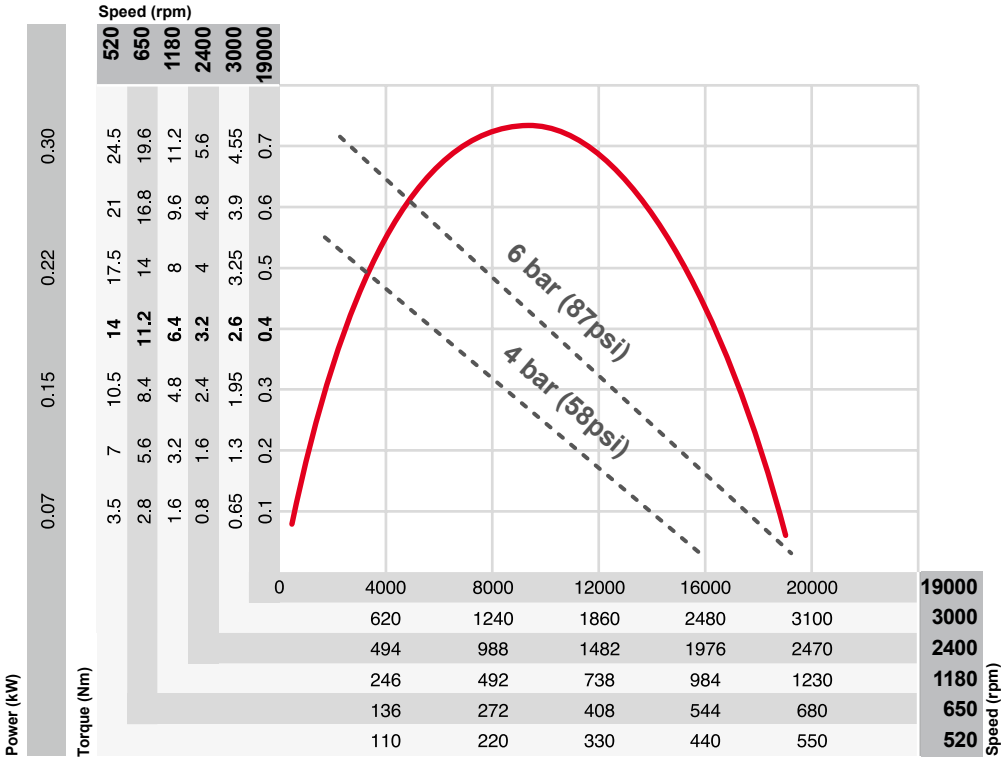

M39-KL data for an operating pressure of 6.3 bars / 90 PSI
reversible

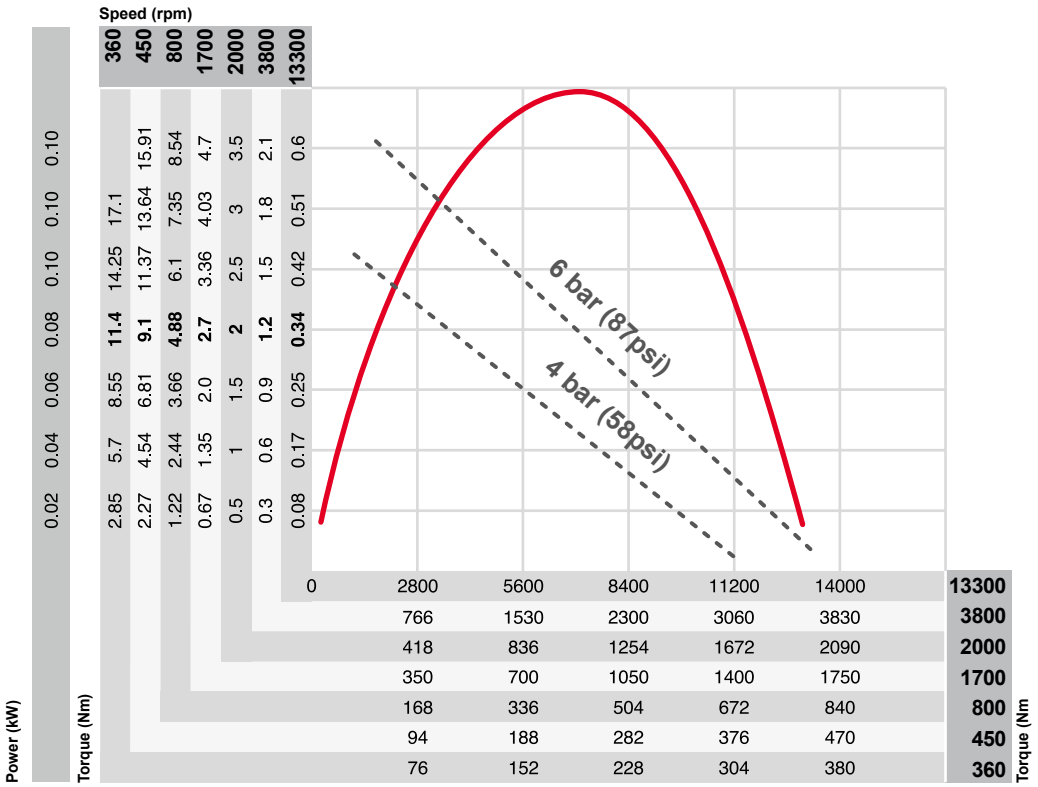

M39-KSL series

Oil-free | 0.23–0.39 kW | 0.34–0.52 hp stainless steel



EX certification according to ATEX directive
II 2G T4 IIC D110°C* or II 2G T5 IIC D85°C**
The EX certification is only valid for use in a holder with a maximum ambient temperature of +40°C (104°F)

Data at a working pressure of 6.3 bars/ 90 PSI

model	Item number	Maximum output power		Torque at max output power		Starting torque		Stall torque		Free speed	Air consumption at rated power		weight	
		Kw	hp	Nm	ft.lb	Nm	ft.lb	Nm	ft.lb	rpm	l/s	CFM	kg	lb
Non reversible														
M39-19000-KSL-ATEX*	**205 147 878 4**	0.39	0.52	0.4	0.3	0.76	0.56	0.8	0.59	19000	8.1	17.2	0.95	2.09
M39-2400-KSL-ATEX**	**205 147 881 4**	0.39	0.52	3.2	2.4	6.1	4.5	6.4	4.7	2400	8.1	17.2	0.95	2.09
M39-520-KSL-ATEX**	**205 147 884 4**	0.38	0.51	14.2	10.5	26.0	19.2	28.0	21.0	520	8.1	17.2	1.2	2.65
Reversible														
MR39-3800-KSL-ATEX**	**205 147 886 4**	0.25	0.34	1.2	0.89	1.6	1.2	2.4	1.8	3800	7.9	16.8	0.95	2.09
MR39-2000-KSL-ATEX**	**205 147 887 4**	0.25	0.34	2.2	1.6	3.0	2.2	4.4	3.2	2000	7.9	16.8	0.95	2.09
MR39-800-KSL-ATEX**	**205 147 889 4**	0.25	0.34	5.4	4.0	7.0	5.2	10.8	8.0	800	7.9	16.8	1.2	2.65
MR39-450-KSL-ATEX**	**205 147 890 4**	0.25	0.34	9.8	7.2	12.6	9.3	19.6	14.5	450	7.9	16.8	1.2	2.65
MR39-360-KSL-ATEX**	**205 147 891 4**	0.25	0.34	12.1	8.9	15.6	11.5	24.0	17.7	360	7.9	16.8	1.2	2.65

- When motors are operated with 100% dry air and without lubrication, the power may be reduced by 5–15% at maximum power.
- To optimize the service life of an oil-free motor, use lubricated air if the application allows it

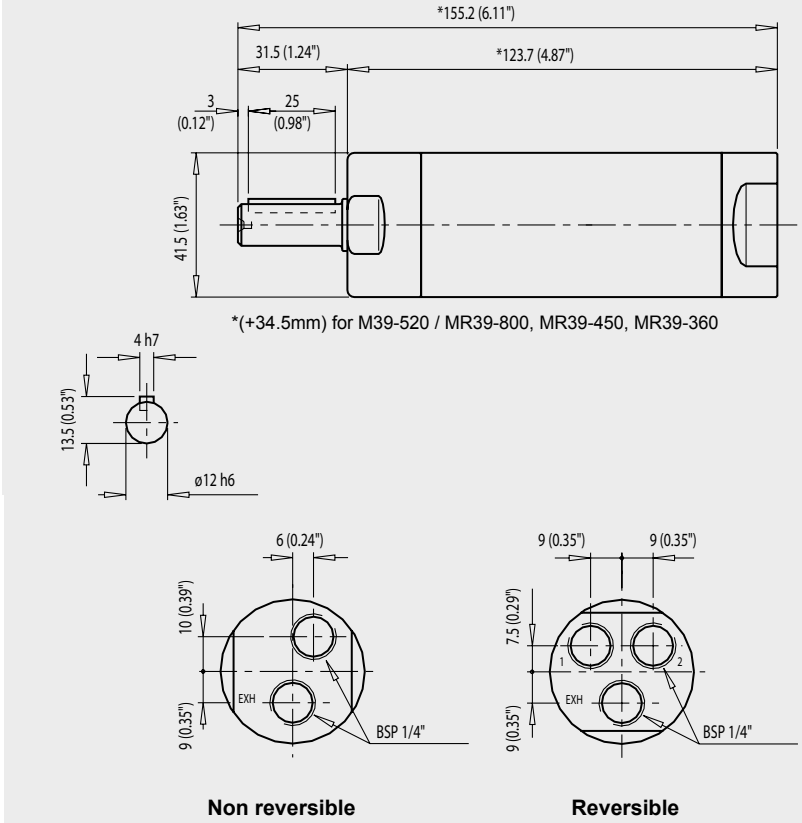

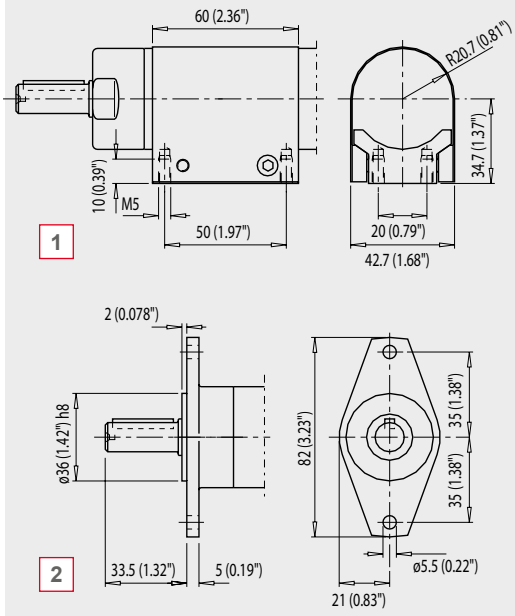

Optional accessories

model	Part number
1 Mounting foot	**205 053 651 3**
2 Mounting flange	**205 053 643 3**
Other accessories: See page 28	

* II 2G T4 IIC D110°C
** II 2G T5 IIC D85°C

M39-KSL Data at a working pressure of 6.3 bars/ 90 PSI
non reversible

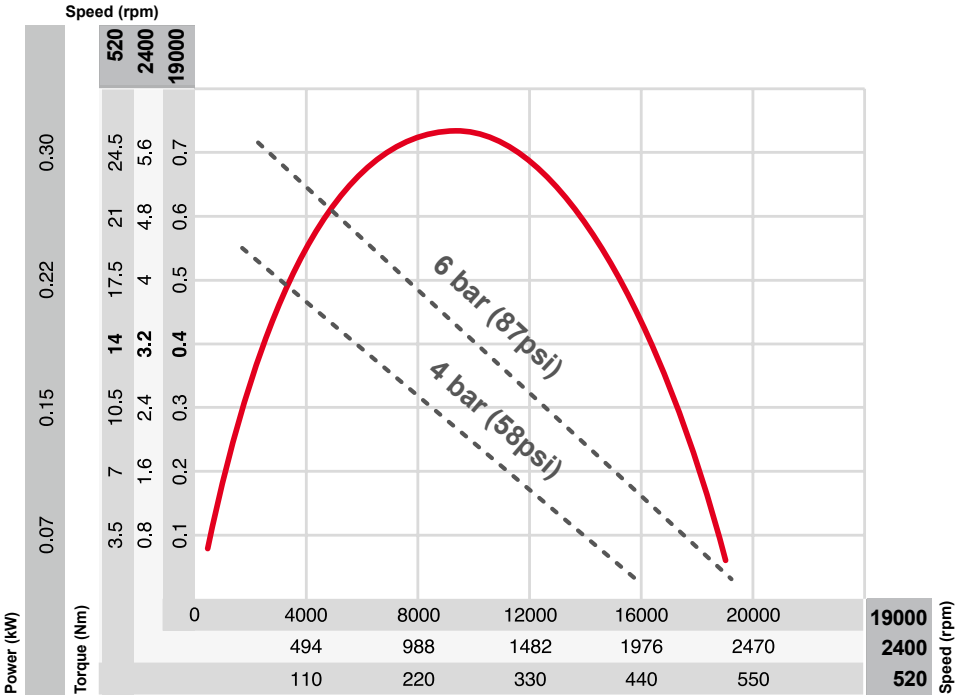

M39-KSL Data at a working pressure of 6.3 bars/ 90 PSI
reversible

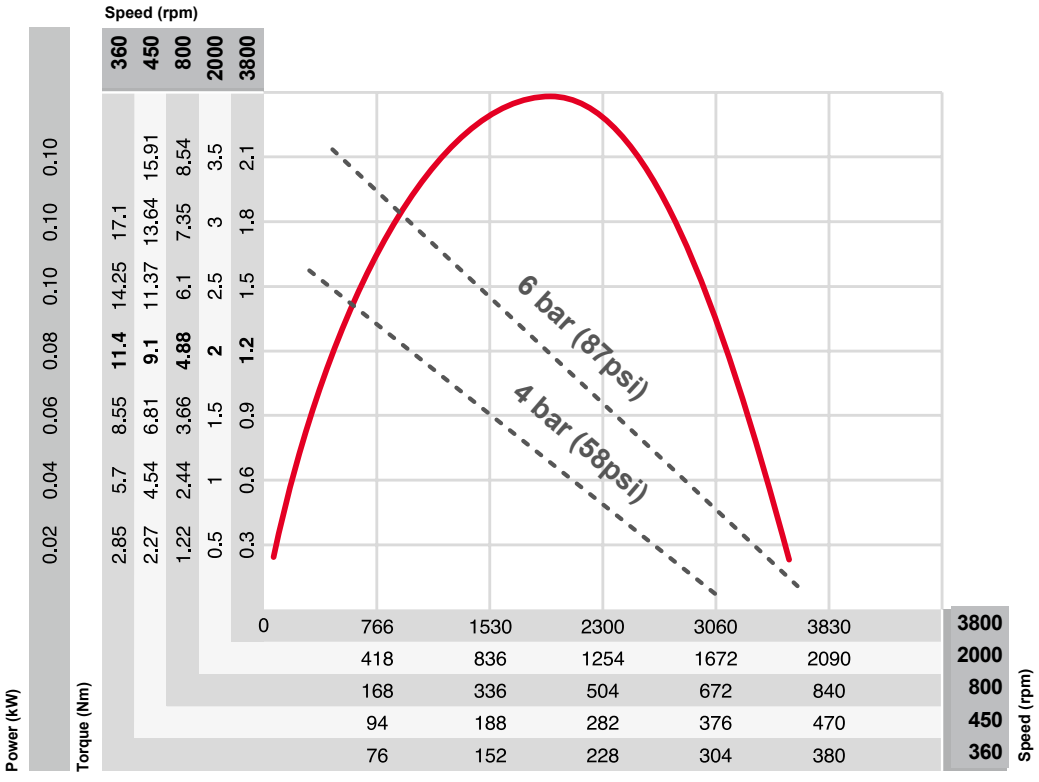

M84-K series

0.58–0.84 kW | 0.79–1.13 hp

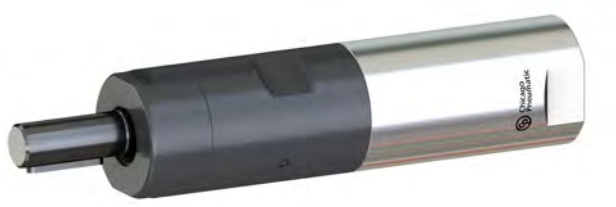

EX certification according to ATEX directive
II 2G T4 IIC D110°C* or II 2G T5 IIC D85°C**

The EX certification is only valid for use in a holder with a maximum ambient temperature of +40°C (104°F)

Data at a working pressure of 6.3 bars/ 90 PSI

model	Item number	Maximum output power		Torque at max output power		Starting torque		Stall torque		Free speed	Air consumption at rated power		weight	
		Kw	hp	Nm	ft.lb	Nm	ft.lb	Nm	ft.lb	rpm	l/s	CFM	kg	lb
Non reversible - keyed spindle														
M84-20000-K-ATEX*	**205 147 912 4**	0.84	1.13	0.74	0.55	1.2	0.89	1.48	1.09	20000	16.2	34.4	1.2	2.65
M84-6300-K-ATEX*	**205 147 913 4**	0.84	1.13	2.4	1.8	3.9	2.9	4.8	3.5	6300	16.2	34.4	1.2	2.65
M84-4000-K-ATEX*	**205 147 914 4**	0.84	1.13	3.8	2.8	6.1	4.5	7.6	5.6	4000	16.2	34.4	1.2	2.65
M84-2400-K-ATEX*	**205 147 915 4**	0.84	1.13	6.3	4.6	10.0	7.4	12.6	9.3	2400	16.2	34.4	1.2	2.65
M84-1400-K-ATEX**	**205 147 916 4**	0.82	1.1	10.5	7.7	17.0	12.5	21.0	15.5	1400	16.2	34.4	1.3	2.9
M84-900-K-ATEX**	**205 147 917 4**	0.82	1.1	16.5	12.2	26.0	19.2	33.0	24.3	900	16.2	34.4	1.3	2.9
M84-540-K-ATEX**	**205 147 918 4**	0.82	1.1	27.0	20.0	44.0	32.0	55.0	41.0	540	16.2	34.4	1.3	2.9
M84-300-K-ATEX**	**205 147 919 4**	0.81	1.09	48.0	35.0	77.0	57.0	95.0	70.0	300	16.2	34.4	2.7	6.0
M84-200-K-ATEX**	**205 147 920 4**	0.81	1.09	75.0	55.0	121.0	89.0	149.0	110.0	200	16.2	34.4	2.7	6.0
M84-115-K-ATEX**	**205 147 921 4**	0.81	1.09	124.0	91.0	201.0	148.0	248.0	183.0	115	16.2	34.4	2.7	6.0
M84-70-K-ATEX**	**205 147 922 4**	0.79	1.06	191.0	141.0	309.0	228.0	382.0	282.0	70	16.2	34.4	4.9	10.8
M84-45-K-ATEX**	**205 147 923 4**	0.79	1.06	299.0	221.0	485.0	358.0	598.0	441.0	45	16.2	34.4	4.9	10.8
Non reversible - threaded spindle														
M84-20000-T-ATEX*	**205 148 141 4**	0.84	1.13	0.74	0.55	1.2	0.89	1.48	1.09	20000	16.2	34.4	1.2	2.65
M84-4000-T-ATEX*	**205 148 143 4**	0.84	1.13	3.8	2.8	6.1	4.5	7.6	5.6	4000	16.2	34.4	1.2	2.65
M84-2400-T-ATEX*	**205 148 144 4**	0.84	1.13	6.3	4.6	10.0	7.4	12.6	9.3	2400	16.2	34.4	1.2	2.65
Reversible - keyed spindle														
MR84-15800-K-ATEX*	**205 147 924 4**	0.63	0.84	0.71	0.52	0.96	0.71	1.42	1.0	15800	14	29.7	1.2	2.65
MR84-5000-K-ATEX*	**205 147 925 4**	0.63	0.84	2.3	1.7	3.1	2.3	4.6	3.4	5 000	14	29.7	1.2	2.65
MR84-3200-K-ATEX*	**205 147 926 4**	0.63	0.84	3.6	2.7	4.9	3.6	7.2	5.3	3200	14	29.7	1.2	2.65
MR84-1900-K-ATEX*	**205 147 927 4**	0.63	0.84	6.0	4.4	8.1	6.0	12.0	8.9	1900	14	29.7	1.2	2.65
MR84-1100-K-ATEX**	**205 147 928 4**	0.62	0.83	10.1	7.4	13.5	10.0	20.0	14.9	1100	14	29.7	1.3	2.9
MR84-700-K-ATEX**	**205 147 929 4**	0.62	0.83	15.8	11.7	21.0	15.5	32.0	23.3	700	14	29.7	1.3	2.9
MR84-420-K-ATEX**	**205 147 930 4**	0.62	0.83	26.0	19.5	35.0	26.0	53.0	39.0	420	14	29.7	1.3	2.9
MR84-230-K-ATEX**	**205 147 931 4**	0.60	0.80	46.0	34.0	61.0	45.0	91.0	67.0	230	14	29.7	2.7	6.0
MR84-150-K-ATEX**	**205 147 932 4**	0.60	0.80	72.0	53.0	96.0	71.0	143.0	105.0	150	14	29.7	2.7	6.0
MR84-90-K-ATEX**	**205 147 933 4**	0.60	0.80	119.0	88.0	161.0	119.0	238.0	175.0	90	14	29.7	2.7	6.0
MR84-55-K-ATEX**	**205 147 934 4**	0.59	0.79	183.0	135.0	247.0	182.0	366.0	270.0	55	14	29.7	4.9	10.8
MR84-35-K-ATEX**	**205 147 935 4**	0.59	0.79	287.0	212.0	388.0	286.0	574.0	423.0	35	14	29.7	4.9	10.8
MR8401 Reversible - keyed spindle														
MR8401-1100-K-ATEX*	**205 148 154 4**	0.62	0.83	10.1	7.4	13.5	10.0	20.0	14.9	1100	14	30.0	1.3	2.9
MR8401-15800-K-ATEX*	**205 148 162 4**	0.62	0.84	0.71	0.52	0.96	0.71	1.42	1.0	15800	14	30.0	1.2	2.65
MR8401-1900-K-ATEX*	**205 148 164 4**	0.62	0.84	6.0	4.4	8.1	6.0	12.0	8.9	1900	14	30.0	1.2	2.65
MR8401-230-K-ATEX*	**205 148 157 4**	0.62	0.8	46.0	34.0	61.0	45.0	91.0	67.0	230	14	30.0	2.7	6
MR8401-420-K-ATEX*	**205 148 156 4**	0.62	0.83	26.0	19.5	35.0	26.0	53.0	39.0	420	14	30.0	1.3	2.9
MR8401-700-K-ATEX*	**205 148 155 4**	0.62	0.83	15.9	11.7	21.0	15.5	32.0	23.3	700	14	30.0	1.3	2.9



With mounting flange



With mounting foot



Power diagram: see page 24

* II 2G T4 IIC D110°C
** II 2G T5 IIC D85°C

Non reversible
M84-20000-K
M84-6300-K
M84-4000-K
M84-2400-K
M84-900-K
M84-540-K

Reversible
MR84-15800-K
MR84-5000-K
MR84-3200-K
MR84-1900-K
MR84-1100-K
MR84-700-K
MR84-420-K

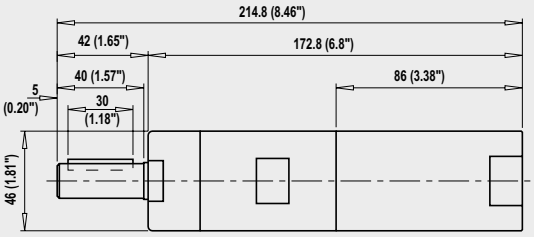

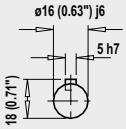

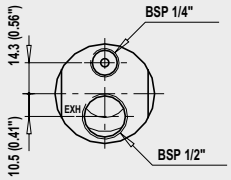

Non reversible

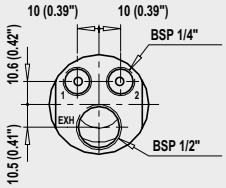

Reversible

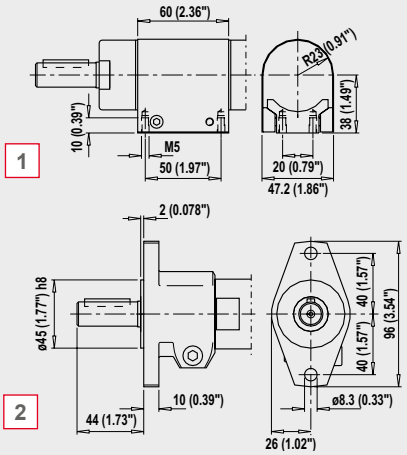

Optional accessories

model	Part number
1 Mounting foot	**205 053 650 3**
2 Mounting flange	**205 053 641 3**

Other accessories: See page 28

Non reversible
M84-300-K
M84-200-K
M84-115-K

Reversible
MR84-230-K
MR84-150-K
MR84-90-K

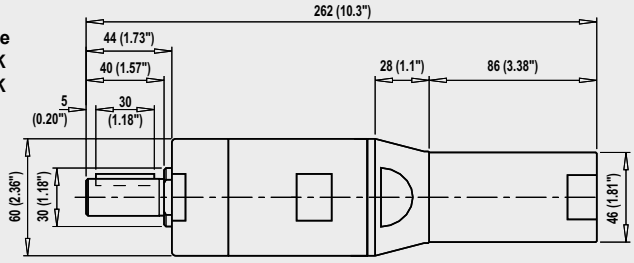

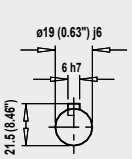

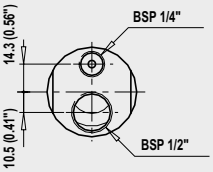

Non reversible

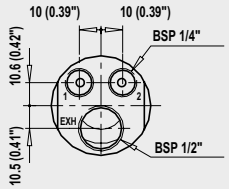

Reversible

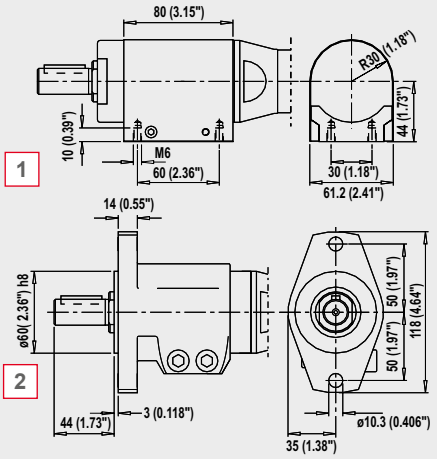

Optional accessories

model	Part number
1 Mounting foot	**205 053 648 3**
2 Mounting flange	**205 053 642 3**

Other accessories: See page 28

Non reversible
M84-70-K
M84-45-K

Reversible
MR84-55-K
MR84-35-K

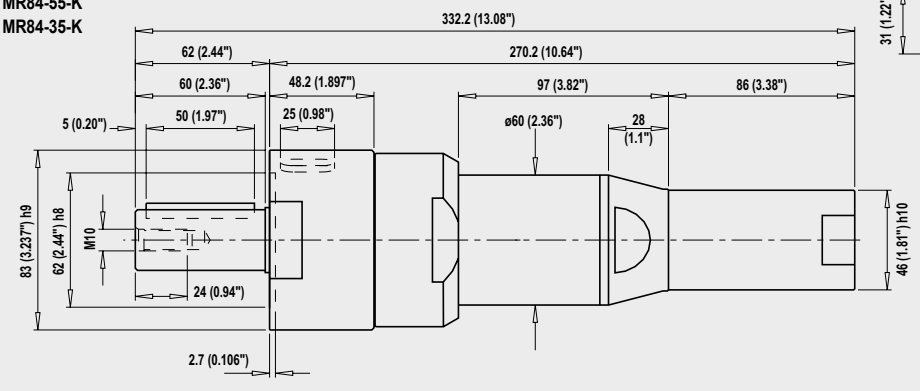

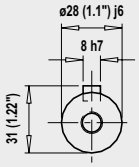

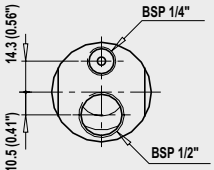

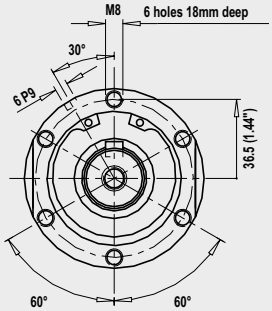

M84-K series

MR84-K data for a working pressure of 6.3 bars / 90 PSI
non reversible

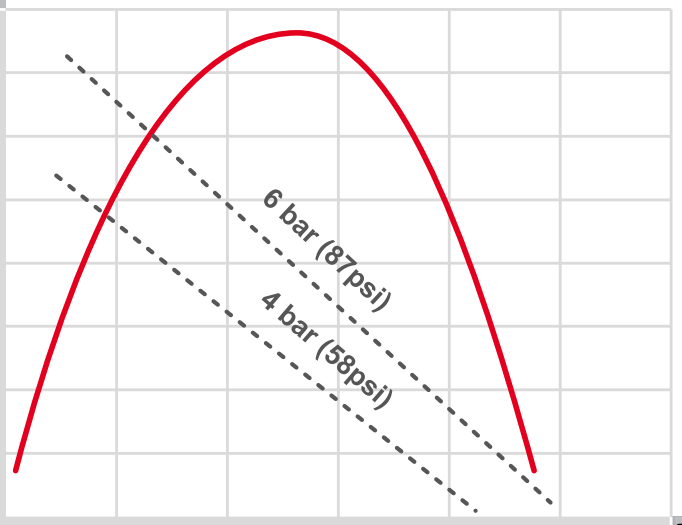

Power (kW)	Torque (Nm)	Speed (rpm)	0	4200	8400	12600	16800	21000	20000
				1333	2666	3999	5332	6665	6300
				838	1676	2514	3352	4190	4000
				508	1018	1524	2032	2540	2400
				298	596	894	1192	1490	1400
				191	382	573	764	955	900
				113	226	335	452	567	540
				63	126	185	252	315	300
				40	80	120	160	200	200
				25	50	75	100	125	115
				16	32	48	64	80	70
				9	19	28	38	47	45
0.14	75	47.5	30	18.75	12	6.75	4.1	2.75	1.5	1.0	0.6	0.19	
0.43	150	95	60	37.5	24	13.5	8.2	5.5	3.0	2.0	1.2	0.37	
0.71	225	142.5	90	56.2	36	20.3	12.3	8.25	4.5	3.0	1.8	0.56	
1.0	**300**	**190**	**120**	**75**	**48**	**27**	**16.5**	**11.0**	**6.0**	**4.0**	**2.4**	**0.75**	
	375	237	150	93.7	60	34	20.6	13.8	7.5	5.0	3.0	0.94	
	450	285	180	112.5	72	40	24.7	16.5	9.0	6.0	3.6	1.13	
	525	332	210	131	80	47	29	19.3	10.5	7.0	4.0	1.31	
	Speed (rpm)	**45**	**70**	**115**	**200**	**300**	**540**	**900**	**1400**	**2400**	**4000**	**6300**	**20000**

MR84-K data for a working pressure of 6.3 bars / 90 PSI
reversible

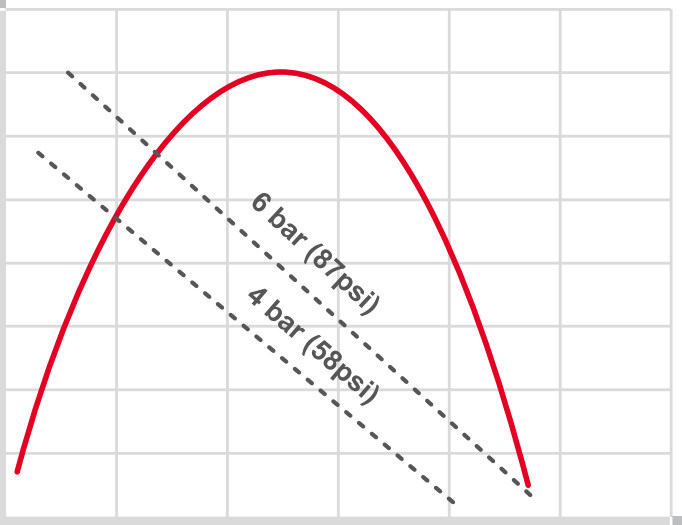

Power (kW)	Torque (Nm)	Speed (rpm)	0	3400	6800	10200	13600	17000	15800
				1048	2096	3144	4192	5240	5000
				668	1336	2004	2672	3340	3200
				399	798	1197	1596	1995	1900
				233	466	699	932	1165	1100
				149	298	447	596	745	700
				90	180	271	361	451	420
				50	101	151	202	252	230
				31	33	94	126	157	150
				19	38	56	75	94	90
				12	25	38	50	63	55
				7	15	22	30	37	35
0.1	68.75	43.75	28.75	17.5	11	6.25	3.75	2.45	1.45	0.87	0.55	0.17	
0.3	137.5	87.5	57.5	35	22	12.5	7.5	4.9	2.9	1.75	1.1	0.34	
0.5	206.25	131.2	86.25	52.5	33	18.75	11.25	7.35	4.35	2.62	1.65	0.51	
0.7	**275**	**175**	**115**	**70**	**44**	**25**	**15**	**9.8**	**5.8**	**3.5**	**2.2**	**0.68**	
	343.7	218.7	143.7	87.5	55	31.25	18.7	12.25	7.25	4.37	2.75	0.85	
	412.5	262.5	172.5	105	66	37.5	22.5	14.7	8.7	5.25	3.3	1.02	
	481.2	306	181.2	122	77	43.75	26.2	17.15	10.15	6.1	3.85	1.19	
	Speed (rpm)	**35**	**55**	**90**	**150**	**230**	**420**	**700**	**1100**	**1900**	**3200**	**5000**	**15800**

2H410 series

0.66 kW | 0.85 hp

Maximum torque 102 Nm, worm gear motor



EX certification according to ATEX directive
II 2G T4 IIC D110°C* or II 2G T5 IIC D85°C**
The EX certification is only valid for use in a holder with a maximum ambient temperature of +40°C (104°F)

Data at a working pressure of 6.3 bars/ 90 PSI

model	Item number	Maximum output power		Torque at max output power		Starting torque		Stall torque		Free speed	Air consumption at rated power		weight	
		Kw	hp	Nm	ft.lb	Nm	ft.lb	Nm	ft.lb	rpm	l/s	CFM	kg	lb
Reversible														
2H410-500 ATEX	**205 147 319 4**	0.66	0.85	500	39	28.8	12	1/2	6	17	36	1.7	3.7	1.39
2H410-350 ATEX	**205 147 320 4**	0.66	0.85	350	51	37.6	12	1/2	6	17	36	1.7	3.7	1.39
2H410-150 ATEX	**205 147 321 4**	0.66	0.85	150	102	75.2	12	1/2	6	17	36	2.0	4.4	1.83
2H410-90 ATEX	**205 147 322 4**	0.66	0.85	90	102	75.2	10	3/8	4	10	21	2.0	4.4	1.83
2H410-60 ATEX	**205 147 323 4**	0.66	0.85	60	102	75.2	10	3/8	2.8	9	19	2.0	4.4	1.83

* II 2G T4 IIC D110°C
** II 2G T5 IIC D85°C

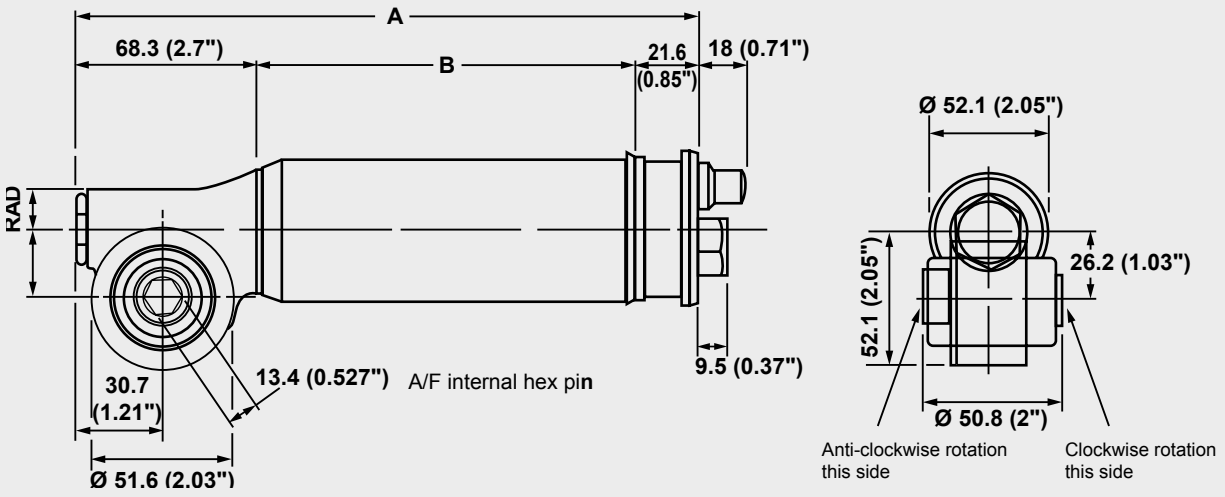

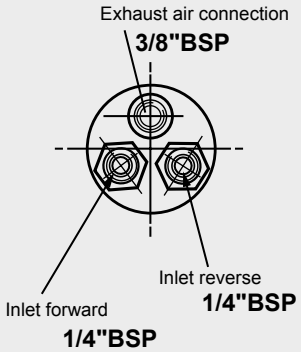

Note: The exhaust air is carried out through the common exhaust air connection and, when running in reverse rotation, via the air inlet. Blocking or throttling these connections reduces the power of the motor.

Installed	Speed	A	W
2H410-500	500	209	119
2H410-350	350	209	119
2H410-150	150	246	156
2H410-90	90	246	156
2H410-60	60	246	156

M180 series

1.41–1.83 kW | 1.89–2.45 hp

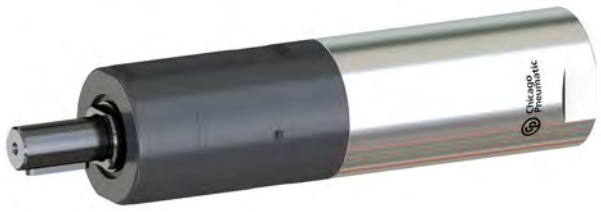

EX certification according to ATEX directive
II 2G T4 IIC D110°C* or II 2G T5 IIC D85°C**

The EX certification is only valid for use in a holder with a maximum ambient temperature of +40°C (104°F)

Data at a working pressure of 6.3 bars/ 90 PSI

model	Item number	Maximum output power		Torque at max output power		Starting torque		Stall torque		Free speed	Air consumption at rated power		weight	
		Kw	hp	Nm	ft.lb	Nm	ft.lb	Nm	ft.lb	rpm	l/s	CFM	kg	lb
Non reversible														
M180-950-K-ATEX	**205 147 972 4**	1.83	2.45	34	25	51	38	68	50	950	34	72	2.9	6.4
M180-600-K-ATEX	**205 147 973 4**	1.83	2.45	57	42	84	62	114	84	600	34	72	2.9	6.4
M180-440-K-ATEX	**205 147 974 4**	1.83	2.45	77	57	113	83	154	114	440	34	72	2.9	6.4
M180-230-K-ATEX	**205 147 975 4**	1.80	2.41	139	103	205	151	278	205	230	34	72	5.1	11.1
Reversible														
MR180-830-K-ATEX	**205 147 965 4**	1.43	1.92	29	21	37	27	58	43	830	31	66	2.9	6.4
MR180-500-K-ATEX	**205 147 966 4**	1.43	1.92	48	35	62	46	96	71	500	31	66	2.9	6.4
MR180-370-K-ATEX	**205 147 967 4**	1.43	1.92	64	47	84	62	128	94	370	31	66	2.9	6.4
MR180-200-K-ATEX	**205 147 968 4**	1.41	1.89	117	86	151	111	233	172	200	31	66	5.1	11.1
MR180-200-K-SI-ATEX	**205 147 970 4**	1.41	1.89	117	86	151	111	233	172	200	31	66	5.3	11.7
MR180-120-K-ATEX	**205 147 969 4**	1.41	1.89	191	141	249	184	382	282	120	31	66	5.1	11.1

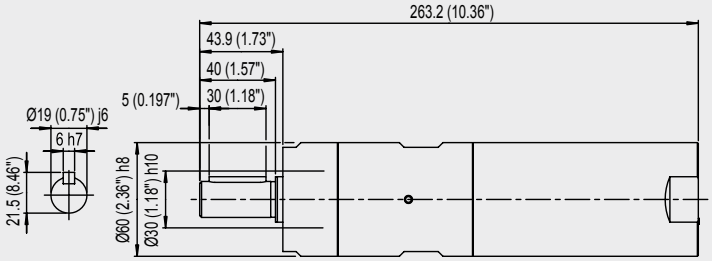

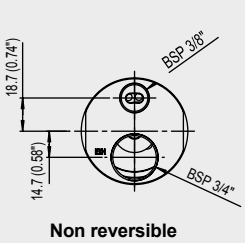

Non reversible

M180-950-K
M180-600-K
M180-440-K

Non reversible

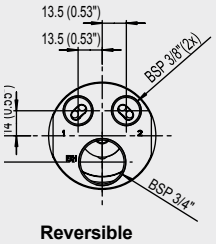

Reversible

Reversible

MR180-830-K
MR180-500-K
MR180-370-K

Optional accessories

model	Part number
1 Mounting foot	**205 053 648 3**
2 Mounting flange	**205 053 642 3**
Other accessories: See page 28	

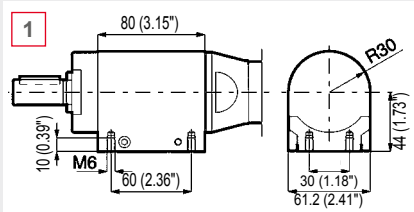

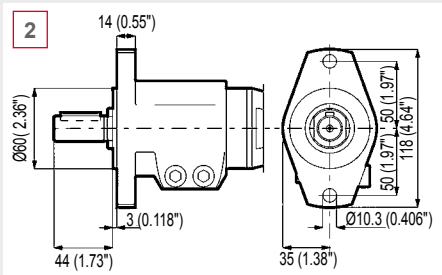

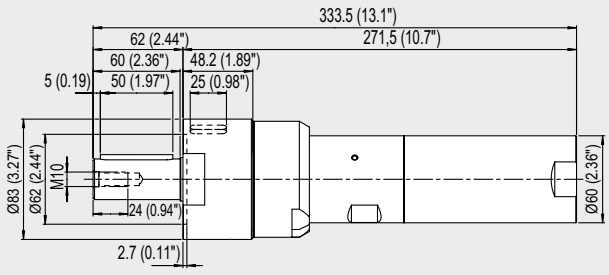

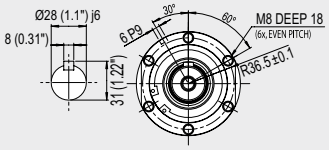

Non reversible
M180-230-K

Reversible
MR180-200-K
MR180-120-K

* II 2G T4 IIC D110°C
** II 2G T5 IIC D85°C

M180 Data at a working pressure of 6.3 bars/ 90 PSI
non reversible

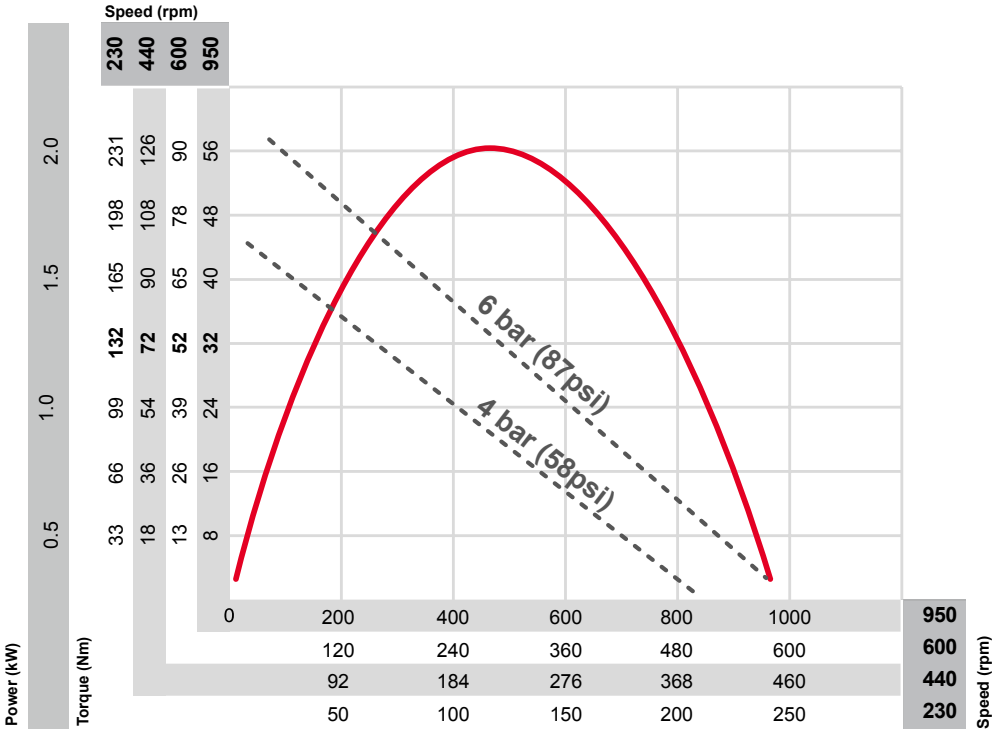

M180 data at a working pressure of 6.3 bars/90 PSI
reversible

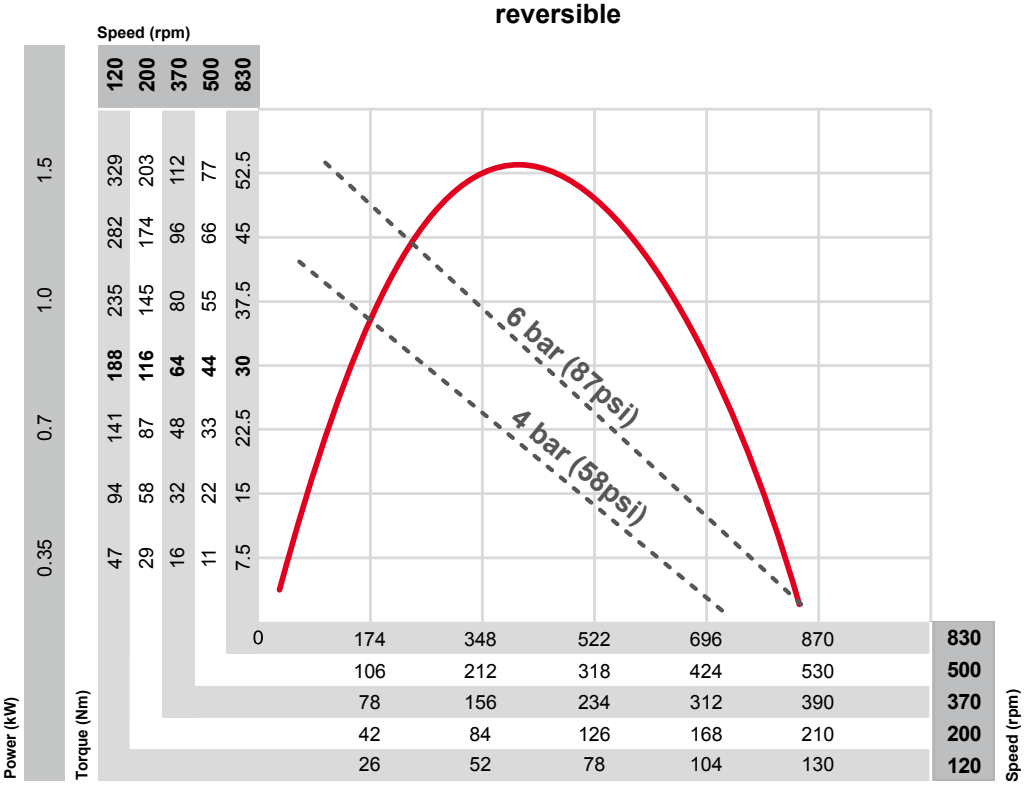

Accessories

How to install a mounting flange

Remove the spacer ring and the front part

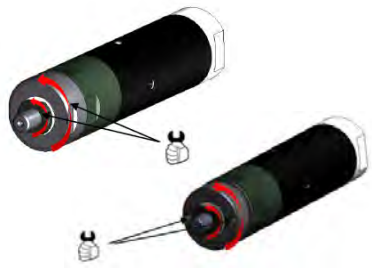

Position the sealing ring
Use Molycote G68 grease



Tighten the flange on the ring gear to 14.75 ftlbs. Use Loctite 243





Mounting flanges

model	Part number
Mounting flange M39/MR39 KL/TL, without bore	**2050536383**
Mounting flange M16/MR16 KSL	**2050536453**
Mounting flange M39, with bore	**2050540673**
Mounting flange M39/MR39 KSL, without bore	**2050553143**
Mounting flange M25/MR25 KL/TL, without bore	**2050536393**
Mounting flange M16/MR16 KL	**2050536403**
Mounting flange M/MR84, with bore	**2050536413**
Mounting flange M39/MR39 KSL, with bore	**2050536433**
Mounting flange M25/MR25 KSL	**2050536443**
Mounting flange M25, with bore	**2050540623**
Mounting flange	**2050025893**
Mounting flange 2.75" CRS	**33213**
Mounting flange	**286423**



Mounting feet

model	Part number
Mounting foot M39/MR39 KL/TL	**2050536473**
Mounting foot M16/MR16 KSL	**2050536533**
Mounting foot M25/MR25 KL/TL	**2050536463**
Mounting foot M/MR84 /M180	**2050536483**
Mounting foot M16/MR16 KL	**2050536493**
Mounting foot M84/MR84 K	**2050536503**
Mounting foot M39/MR39 KSL	**2050536513**
Mounting foot M25/MR25 KSL	**2050536523**

Which accessories fit which air motor?	Mounting feet								Mounting flange with bore												Mounting flange without bore		Front nut threaded (short thread)	Coaxial outlet for M25
Part number	2050536493	2050536533	2050536463	2050536523	2050536473	2050536513	2050536503	2050536483	2050536403	2050536453	286423	441653	2050540623	2050536443	6155482820	6155482150	2050540673	2050536433	2050536413	2050536423	2050536393	2050536383	2050550243	2050550233
stainless steel	N	S	N	S	N	S	N	N	N	S	N	N	N	S	S	N	N	S	N	N	N	N	N	N
M16-KL	X								X															
MR16-KL	X								X															
M16-KSL		X								X														
MR16-KSL		X								X														
M25-KL			X								X*	X*	X								X		X*	X
M25-TL			X								X*	X*	X								X		X*	X
MR25-KL			X										X								X			
M25-KSL				X										X										
MR25-KSL				X										X										
501-TL (except 930 rpm)			X								X*	X*	X								X		X*	X
M2501-930-TL			X																					X
M2501-KSL				X											X									
MR2501-KL			X													X								
M(R)39-KL/TL					X												X					X		
M(R)39-KSL						X												X						
M3901-5350 to 340-TL					X												X					X		
M3901-60-TL								X												X				
M3901-80-TL								X												X				
M84-20000 to 540-K							X												X					
M84-300 to 115-K								X												X				
MR84-15800 to 420-K							X												X					
MR84-230 to 90-K								X												X				
M84-20000 to 2400-T							X												X					
MR8401-K (except 230 rpm)							X												X					
MR8401-230-K								X												X				
MR180-830 to 370-K								X												X				
M180-950 to 440-K								X												X				

X*: Mounting flange 286423 and mounting flange 441653 must be installed directly on the front nut 2050550243

Accessories

silencer



	Part no.	Description	Air motor series	Noise damping (estimated)	Loss of performance (estimated)
1	**2050541743**	Sintered bronze muffler G1/8	M16	15 db(A)	10%
1	**2050541753**	Sintered bronze muffler G1/4	M25/M39	15 db(A)	10%
1	**2050541763**	Sintered bronze muffler G1/2	M84/M180	15 db(A)	10%
2	**2050541773**	Type B muffler for air motors	M16/M25/M39/ M84/ M180	20 db(A)	10%
3	**2050541783**	Type C muffler for air motors		25 db(A)	7%

Connections: The muffler 20505411773 has a 3/8" threaded connection. M16, M25 and M39 must be connected to the motor by means of a pipe or hose with suitable connections.

Spring-loaded shafts

The spring-loaded shaft is an accessory that can be used to convert a pneumatic air motor into a pneumatic screw spindle. For air motors with thread (TL version)

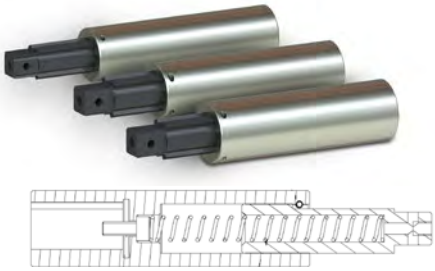

Part no.	model	Air motor series	Square drive	Output spindle	Screw
108352	Spring-loaded shaft 3/8, Ø10	MR25	3/8"	10 mm	M4x10
2050558683	Spring-loaded shaft 3/8, Ø12	MR39	3/8"	12 mm	M4x10
2050557843	Spring-loaded shaft 1/2, Ø16	MR84	1/2"	16 mm	M4x12
2050557863	Spring-loaded shaft 1/2, Ø19	MR84 MR180	1/2"	19 mm	M5x15

Chuck

For M25/M39 air motors (TL version)



	Part no.	Description	Type
1	**2050530133**	Chuck 3/8-24 UNF – 5/16" (8 mm) incl. key	Keyed drill chuck
1	**2050529543**	Chuck 3/8-24 UNF – 3/8" (10 mm) incl. key	Keyed drill chuck
1	**473113**	Chuck 3/8-24 UNF – 1/2" (13 mm) incl. key	Keyed drill chuck
2	**473433**	Keyless chuck 3/8-24 UNF – 5/16" (8 mm)	Keyless drill chuck
2	**473423**	Keyless chuck 3/8-24 UNF – 3/8" (10 mm)	Keyless drill chuck
2	**2050478193**	Keyless chuck 3/8-24 UNF – 1/2" (13 mm)	Keyless drill chuck

Collets

For M25/M39 air motors (TL version)

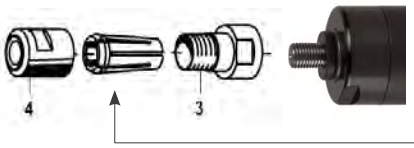

	Part no.	Description
3	**6155230180**	CNOMO collet chuck holder
4	**6156071360**	CNOMO collet chuck nut
	6155260480	CNOMO collet chuck ø 3 mm
	6155260490	CNOMO collet chuck ø 6 mm
	6155260500	CNOMO collet chucks ø 1/4" (6.35 mm)
	6155260510	CNOMO collet chuck ø 8 mm

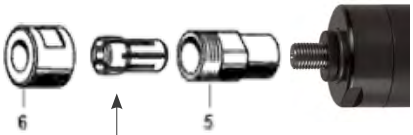

	Part no.	Description
5	**6155230230**	Series 200 collet chuck holder
6	**6156071440**	Series 200 collet chuck nut
	6155260610	Series 200 flexible collet chuck ø 1/8" (2.4 to 3.2 mm)
	6155261510	Series 200 flexible collet chuck ø 3.2 to 4 mm
	6155261520	Series 200 flexible collet chuck ø 3.7 to 4.5 mm
	6155261530	Series 200 flexible collet chuck ø 4.2 to 5 mm
	6155261540	Series 200 flexible collet chuck ø 4.7 to 5.5 mm
	6155260620	Series 200 flexible collet chuck ø 5.2 to 6 mm
	6155260630	Series 200 flexible collet chuck ø 1/4" (5.55 to 6.35 mm)
	6155261550	Series 200 flexible collet chuck ø 6.2 to 7 mm
	6155261560	Series 200 flexible collet chuck ø 6.7 to 7.5 mm
	6155260640	Series 200 flexible collet chuck ø 7.2 to 8 mm
	6155261570	Series 200 flexible collet chuck ø 7.7 to 8.5 mm
	6155261580	Series 200 flexible collet chuck ø 8.2 to 9 mm
	6155260650	Series 200 rflexible collet chuck ø 3/8" (8.7 to 9.5 mm)

Air motors technical guide



All about air motors:

- Design and operating principle
- Power + consumption, throttling + regulation
- Tips for making the right selection
- Sound damping, lubrication, valves
- Installation, lines, compressed air provision

... and much more!

DOWNLOAD NOW!

Download the technical guide



NEW:

The air motor online selector

Just a few steps to finding the correct air motor for your individual application:



Installation and Commisioning

- A good air supply is the key to achieving the highest efficiency from an air motor. It is recommended that the compressed air is filtered and regulated for maximum performance, speed and longevity. With an air treatment unit (filter) and a pressure regulator, the air can be filtered and adjusted to the required pressure.
- Always use the recommended hose size for the air supply
- It is recommended that an exhaust hose diameter larger than the air supply hose is chosen
- Check that the couplings are not reducing the air pressure
- Minimum air pressure in the supply circuit: 7 bar (101 psi) and regulated compressed air at the motor: 6.3 bar (90 psi)
- Max. line length between the main line and valve: 1.5 m
- Max. hose length between the valve and air motor: 3m (9.8 ft)

Good **air quality is fundamental** for maximizing the service life of the air motor. It is recommended to use a FRL system with a pressure regulator. This ensures proper air supply at a constant pressure.



Motor type	Air intake thread size	Air exhaust thread size	Air intake hose size		Air exhaust hose size (non reversible)		Air exhaust hose size (reversible)	
	BSP	in.	mm	in.	mm	in.	mm	in
M16	**1/8**	**1/8**	5.0	3/16	8.0	5/16	6.3	1/4
M25	**1/8**	**1/4**	6.3	1/4	10.0	3/8	8.0	5/16
M39	**1/4**	**1/4**	8.0	5/16	10.0	3/8	8.0	5/16
M84	**1/4**	**1/2**	10.0	3/8	16.0	5/8	13.0	1/2
M180	**3/8**	**3/4**	13.0	1/2	20.0	13/18	13.0	1/2
2H410	**1/4**	**3/8**	10.0	3/8	16.0	5/8	13.0	1/2

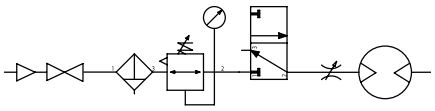

Shut-off, filtering, regulating compressed air and checking the valve

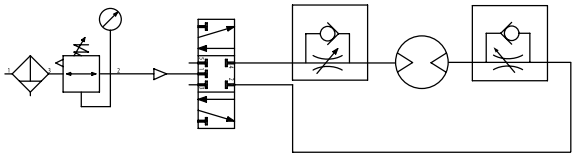

Reversible motor with 5/3 control valve

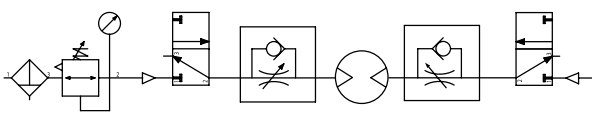

Reversible motor with two 3/2 control valves

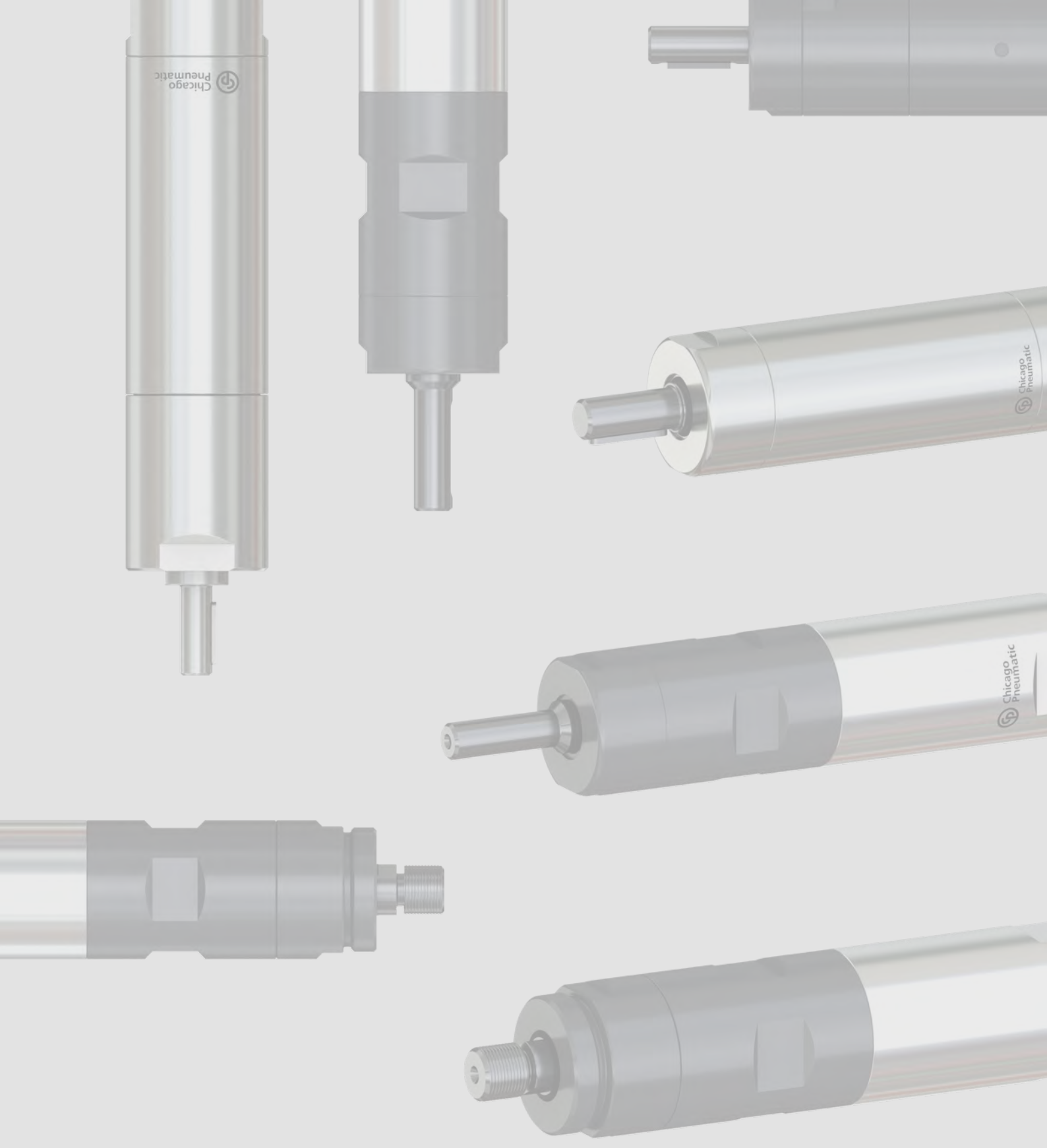

Chicago Pneumatic

Chicago Pneumatic

At Chicago Pneumatic, we have a passion for performance and long-term partnerships. The Chicago Pneumatic brand has been synonymous with reliability since 1901, based on technology and trust.

People. Passion. Performance.



Air motors from Chicago Pneumatic

The complete portfolio can be found on our website **www.cp.com** or in our online catalog **m.cp.com**.
Scan the QR code displayed below. This will show you our motor range and allow you to find the following data and information for each model:

- CAD drawings for download – in all formats so you can integrate them into your designs and projects
- Power curves to determine the most suitable motor variant
- Product images

Your dealer:

© 2021 Chicago Pneumatic. We reserve the right to make changes, errors and misprints