AUGUST 2026

FENCES&GATES



WATERFRONT FRAMELESS GLASS

BY POWER POOL FENCING AND BALUSTRADE

AWARDS ENTRIES

NOMINATE NOW!

OFFICIAL **INDUSTRY PUBLICATION**

PUBLISHER
Australian FENCING and GATE Industry
Suite 106, 330 Wattle Street
Ultimo NSW 2007
Ph: 02 8315 7079

EDITOR
Sherrie Mazur
media@fencesandgates.com.au

While every effort has been made to ensure the accuracy of information contained in this publication, the publisher assumes no responsibility for errors, omissions or any consequences arising from reliance on the information published. The opinions expressed in this publication do not necessarily reflect the views of the publisher.

Unless otherwise attributed, all editorial content contained within this publication is the property of Australian FENCING and GATE Industry and is protected under the Copyright Act 1968. Material may be downloaded, displayed, printed and reproduced for personal, educational and non-commercial use provided appropriate attribution is given to Australian FENCING and GATE Industry. The publisher reserves the right to revoke such permissions at any time.

Requests and enquiries concerning reproduction, permissions and rights should be directed to:
media@fencesandgates.com.au

OUR FOUNDATION PARTNERS

WARATAH® FIRST - BECAUSE IT LASTS.
Colorbond®
Cyclone®



Wollemi®

Stylish surrounds.

So much more than just a physical boundary or privacy screen, your COLORBOND® steel fence is another opportunity to add a strong and stylish design statement to your home and landscaping.

Available in a range of colours echoing Australia's natural landscapes, you can also customise your COLORBOND® steel fence with different panel, post and top cap designs.

Be inspired at **colorbond.com/fencing**

Colorbond®

Made by Australia

The COLORBOND® steel colour swatch and image shown have been reproduced to represent actual product colours as accurately as possible. However, we recommend checking your chosen colour against an actual sample of the product before purchasing as varying light conditions and limitations of the printing process may affect colour tones. COLORBOND®, BlueScope, the BlueScope brand mark and ® colour names are registered trade marks of BlueScope Steel Limited. ™ colour names are trade marks of BlueScope Steel Limited. © 2022 BlueScope Steel Limited ABN 16 000 011 058. All rights reserved.

BlueScope



Metroll®

BETTER SERVICE • BETTER BUILDING SOLUTIONS

FIRST IN FENCING

Colorbond®

Designed for Architects. Trusted by Builders. Protected by Warranty.

A fence is no longer just a boundary.

It's a design element. A structural decision.

And increasingly, a statement of quality that architects, builders and installers stand behind.

Metroll steel fencing brings architectural clarity and engineered performance together in a system designed for modern Australian builds. Manufactured locally from 100% Australian-made COLORBOND® steel, Metroll fencing delivers clean lines, durability and long-term confidence.

With our branches throughout Victoria, you benefit from a reliable local supply network backed by the service and technical support you can count on.

metroll.com.au

Find out more about our COLORBOND® steel Fencing Profiles by visiting your local Metroll branch.

Metroll® is a registered trademark of Metroll Pty Ltd © All rights reserved. COLORBOND® is a registered trademark of BlueScope Steel Limited.

FROM THE EDITOR



Welcome to the August edition of FENCES&GATES.

This edition puts the focus firmly on the work being delivered across Australia's fencing and gate industry, from standout residential and commercial projects to innovative products, skilled contractors and the people behind the businesses.

We take a closer look at award-winning projects from around the country, meet an Industry Innovator changing the way fencing components are made, and feature products and expertise from our industry Partners.

You'll also find the latest on the 2027 Australian FENCING and GATE Industry Conference and Trade Show as we prepare to bring more than 500 industry professionals together on the Gold Coast next April.

FENCES&GATES is about showcasing the capability of our industry and sharing practical ideas, products and projects with the contractors who build it every day.

Thank you to our Partners, contributors and contractors for being part of this edition.

Sherrie Mazur
EDITOR



COLORBOND® steel: It's all about how it's made



Over sixty years of Australian research & development have created a range of technologies that give COLORBOND® steel its long-lasting performance under some of the harshest conditions.
Fence panels made from COLORBOND® steel provide five layers of protection, starting with the steel base, which is manufactured to meet all the relevant Australian Standards, ensuring strict adherence to the required grade and strength.

The base is then coated in BlueScope's industry-leading metallic coating, incorporating Activate® technology, to provide enhanced corrosion resistance.

A thin pretreatment layer is then applied to optimise the adhesion of further coatings, and a corrosion-inhibitive primer is baked onto the surface.

Finally, there's a topcoat of specially developed, exterior-grade paint that's baked on to provide resistance to chipping, flaking and blistering to ensure the finish retains its look for longer.

So, you can be sure that a fence panel made from COLORBOND® steel can enhance the look, privacy and security of your home for years to come.

For more information visit:

COLORBOND.COM/FENCING

or call 1800 022 999

COLORBOND®, BlueScope & the BlueScope brand mark are registered trademarks of BlueScope Steel Limited.

© 2026 BlueScope Steel Limited. ABN 16 000 011 058. All rights reserved.



FRAMELESS GLASS POWER POOL FENCI AND BALUSTRADE



NG

WATERFRONT GLASS

Frameless fence & balustrade







Frameless glass was used throughout this Broadbeach Waters waterfront project to provide the required pool barrier while maintaining views across the property and canal.

The installation uses Glassfit frameless glass pool fencing with Premium TOUGHCOAT matte black non-conductive spigots. Glassfit matte black stand-off pins and hardware were also used across the project.

The glass installation extends across different levels of the outdoor area, including the pool perimeter and elevated entertaining area, creating a consistent glass barrier system within the architecture.

PROJECT DETAILS

Project: Viola
Location: Broadbeach Waters, Queensland
Contractor: Power Pool Fencing and Balustrade
System: Glassfit frameless glass pool fencing
Spigots: Premium TOUGHCOAT matte black non-conductive spigots
Hardware: Glassfit matte black stand-off pins and hardware

Innovator

CHARLIE NELSON

NELSONS CNC



Charlie Nelson has been recognised as an Industry Innovator for developing the CNC-machined aluminium press-fit end cap.

Created in 2010, the precision-machined aluminium cap uses an interference fit and is tapped into place with a rubber mallet, eliminating the need for welding or adhesive. It can also be powder coated before or after installation.

Charlie has over 15 years of fencing industry experience and more than 30 years of CNC machining experience across Australia and the USA.

Nelsons CNC now services more than 2,000 customers across Australia, with customers in the USA and exports to Canada and New Zealand.

THE INNOVATION

CNC-machined aluminium
Precision press-fit installation
No welding or adhesive
Powder coat before or after installation

Where timber craft meets technology

Traditional timber craftsmanship meets modern gate automation in this custom residential sliding gate, designed to complement the property's new fencing and substantial stone pillars. by Peninsula Timber Gates.

At 4.5m wide and 1.9m high, the gate was constructed from 140x65mm and 66x30mm Design Pine using traditional mortice and tenon joinery. Hand-cut cross bracing and morticed lower slats give the gate its distinctive architectural character while maintaining a strong visual connection with the surrounding fencing.

The timber was supplied by Bowens Hastings, with woodworking adhesives supplied by TimbaTech. IBFM gate hardware was used and the completed gate was spray painted with Dulux Weathershield.

Automation is provided by a TOUSEK Pull T24 sliding gate motor supplied by Global Access. The 24V operator incorporates features including an automatic reversal system, adjustable soft stop and self-learning force control, with provision for battery backup.

Safety and security were important parts of the brief, particularly because the enclosed area would be used by young children and pets. A battery backup was installed to reduce the need for manual operation during a power outage.

The footing was also reinstalled level to help prevent the gate from rolling if power was unavailable for an extended period. Two sets of physical stops were installed at both the fully open and fully closed positions to help ensure the gate remains securely on its track.

The finished installation combines traditional timber joinery, automated access and considered safety measures in a gate designed specifically for the architecture and practical requirements of the property.




22

AUSTRALIAN FENCING AND GATE AWARDS

ENTER THE INDUSTRY AWARDS NOW!

Get your entries in for Australia's premier awards program for the fencing and gate industry.

The Australian FENCING and GATE Awards recognise outstanding projects and people, celebrating excellence, innovation and achievement across the sector. **Entries close 30th of September 2026.**

ENTER PROJECTS

ENTER PEOPLE



BUILD BETTER WITH A LYSAGHT® STEEL FENCE

Aussie fence installers have been choosing LYSAGHT® steel fencing for decades. Our fences have always been shaped from 100% Australian-made COLORBOND® steel so installers know they're supplying their customers with a product that is made to last.

Add to that the back-up, delivery, service and support from Australia's leading steel product manufacturer and you'll understand why LYSAGHT® steel fencing is favoured by professional installers everywhere.

FIND OUT MORE ABOUT HOW YOU CAN SOON BE INSTALLING TOP-QUALITY LYSAGHT® STEEL FENCING BY VISITING YOUR LOCAL LYSAGHT BRANCH OR CALL US ON 13 30 38.

COLORBOND®, LYSAGHT® and ® product names are registered trademarks of BlueScope Steel Limited and ™ product names are trademarks of BlueScope Steel Limited. © 2026 BlueScope Steel Limited. ABN 16 000 011 058. All rights reserved. BLY0205 - 01/26

LYSAGHT.COM


BORAL
Building something great
AUSTRALIAN MADE AND OWNED
Boral is a leader in sustainable construction solutions, offering high-performance packaged products trusted across Australia.
Our packaged cement range delivers consistent quality, durability, and innovation to support efficient, responsible construction.
Scan to learn more about Boral's packaged cement
boral.com.au/cement
Photo courtesy of Yergan Landscape

THE INDUSTRY IS HEADING TO THE GOLD COAST

Join more than 500 industry professionals for the 2027 Australian FENCING and GATE Industry Conference, Trade Show and Gala Awards Dinner at the Convention Centre at Broadbeach on the Gold Coast in Queensland. Two days bringing together fencing and gate contractors, manufacturers, suppliers and industry professionals to connect, discover new products and build industry relationships.

More than 50 exhibitor spaces are already booked, with limited exhibition space remaining.

BRING YOUR TEAM

Make it a team event. Businesses attending as a group can take advantage of branded tables, giving your team its own meeting point while putting your business name in front of the industry.

WHEN:

Wednesday 28 and Thursday 29 April 2027

WHERE:

Gold Coast Convention Centre at Broadbeach

Queensland

WHO:

500+ industry professionals

50+ exhibitor spaces already booked

Limited exhibition space remaining

Book your place for 2027.

BOOK TICKETS NOW!

Built in spotted gum



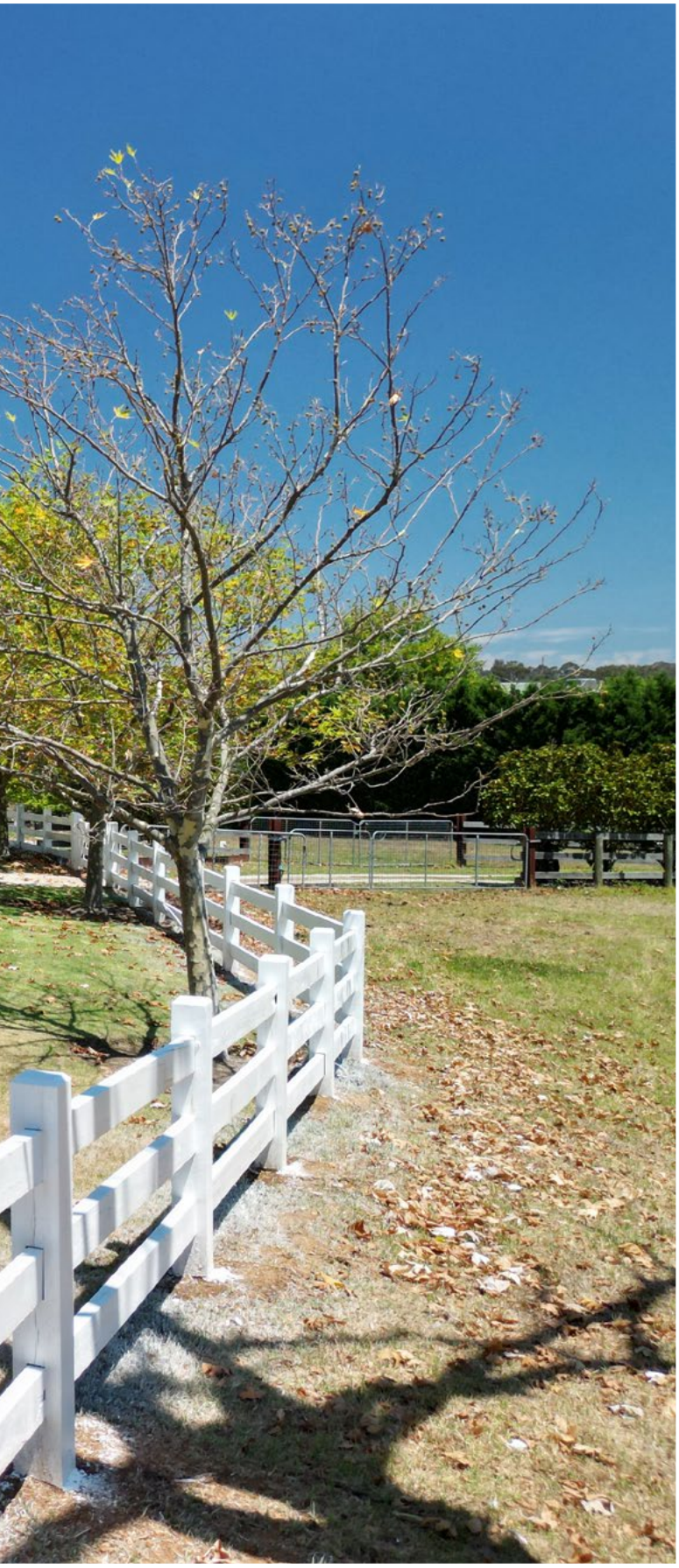

Winner in the Australian FENCING and GATE Awards Rural/Farm cetegory was this project.

Spotted gum hardwood and traditional mortise-and-tenon construction were at the heart of this three-rail rural fencing project by Grand Ridge Arenas & Excavations.

The spotted gum rails were mortised into the posts, creating clean, flush connections without protruding hardware. Posts were set in concrete, while kickboards were incorporated along the base of the fence.

A custom blackwood gate completed the installation, designed to integrate with the surrounding fence line.

PROJECT DETAILS

- Spotted gum three-rail mortised fencing
- Mortise-and-tenon construction
- Kickboards
- Custom blackwood gate
- Posts set in concrete

Innovation in gate safety & performance



Polaris Hinges, the trusted choice for Tradies & Homeowners, continues to lead the way in engineered gate hardware, delivering high-quality hinge solutions designed to improve safety, durability and long-term performance across residential and commercial fencing applications. As a recognised brand partner featured on the SPASA-produced television program Pool Spa Life, Polaris Hinges showcases its commitment to innovation through products that meet the real-world needs of tradies and homeowners alike.

Polaris Hinges' focus on practical engineering, reliability and adjustable soft self-close - key factors in reducing ongoing maintenance requirements and extending the lifespan of fencing systems. By addressing common gate performance issues at the hinge level, Polaris Hinges helps improve safety outcomes and everyday usability.

Uncontrolled gate slamming remains one of the most common causes of premature fence and gate failure.

Repeated impact places unnecessary stress on posts, frames and fixings, often leading to misalignment, damage and ongoing repairs. Polaris Hinges address this issue through advanced soft-close technology that ensures gates close smoothly and consistently, minimising impact forces and protecting the surrounding fence structure over time.

The Polaris 200 Utility Hinge is a flagship product within the Polaris range, valued for its versatility, strength and reliability. Engineered to suit almost any gate type, the Polaris 200 can be used across steel, timber, aluminium and composite gate systems, making it a highly adaptable solution for fencing contractors.

With its robust construction and award-winning soft-close functionality, the Polaris 200 Utility Hinge delivers consistent performance while reducing wear and tear on both the gate and fence over time. Its on-site adaptability helps streamline installations without compromising safety or quality.

The Polaris Polymer Soft Close Hinge offers a cost-effective solution specifically designed for aluminium and lightweight metal gates. Manufactured from high-quality polymer materials, the hinge provides durability, smooth closing action and long-term reliability at an accessible price point, delivering real value.


FENCESPOT

Young Achiever

MATTHEW HORLOCK

FENCESPOT & BEYOND FENCING

Matthew Horlock, General Manager of FenceSpot in Western Australia, brings more than 20 years of fencing, construction and trade experience to the industry.

With a background as a qualified cabinet maker and extensive hands-on installation experience, Matt specialises in glass fencing and balustrades, aluminium gates and fencing, stainless steel handrails and customised architectural installations.

Matt works closely with homeowners, builders, architects and the FenceSpot team to turn concepts into practical, buildable solutions.

His collaborative approach to design, fabrication and problem-solving has helped establish FenceSpot's reputation for delivering complex projects and customised outcomes that go "Beyond Fencing".

As a leader and mentor, Matt is also committed to developing the next generation, sharing his technical knowledge and practical experience while fostering a strong culture of craftsmanship, teamwork and innovation.

Matthew was honoured as an Industry Young Achiever in the Australian FENCING and GATE Awards.

Rethinking Panic Bars for Outdoor Gates

Panic bars were originally designed for doors, but outdoor gates present a very different set of demands. Exposure to weather, gate movement and long-term wear can all impact how reliably a system performs over time.

With more than 35 years of experience developing magnetic latching solutions for outdoor gate applications, D&D Technologies has rethought the category through purpose-built and innovative design.





“This system was designed specifically for outdoor gates, where movement, weather and wear all affect performance”

Richard Zitzelsperger
Group Product Development Manager

The MagnaLatch® Panic Bar + Access system replaces the traditional spring-based approach with magnetic latching, reducing mechanical resistance and helping gates close more consistently in changing environmental conditions.

Constructed from corrosion resistant materials, the system is built to perform in demanding Australian environments, from coastal settings to high-traffic public spaces where safety and reliability are essential.

"The key is being able to control entry from the outside while always allowing safe exit from the inside"

Justin Francis
Director of Product & Brand



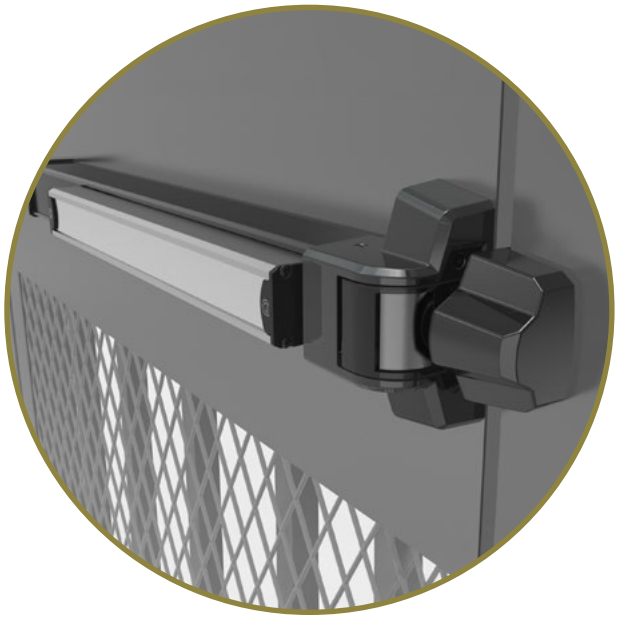

The MagnaLatch® Panic Bar + Access system replaces the traditional spring-based approach with magnetic latching, reducing mechanical resistance and helping gates close more consistently in changing environmental conditions.

Constructed from corrosion resistant materials, the system is built to perform in demanding Australian environments, from coastal settings to high-traffic public spaces where safety and reliability are essential.

This combination of access control and safe egress is critical in environments such as swimming pools, childcare centres, sporting facilities and public-access spaces, where compliance, security and ease of exit must all work together.

The Panic Bar can also be purchased separately and is compatible with a wide range of external lock and trim options, providing greater flexibility for both retrofit and new installations.

Learn more about the MagnaLatch® Panic Bar + Access at ddtech.com

Fencing the range

Supreme Line Fencing
Country Club Tasmania

Supreme Line Fencing delivered more than 1.3km of chainmesh fencing across the new driving range, mini golf course and security areas at Country Club Tasmania.

The driving range features approximately 474m of 3000mm-high black PVC chainmesh, together with six sets of equal-leaf gates designed for openings of approximately 6500mm. Gate heights range from 3000mm to 4800mm.

A further 200m of 1200mm-high black PVC chainmesh and gates was installed around the mini golf course, while approximately 650m of 1800mm-high galvanised PVC chainmesh and gates provides perimeter security fencing.

PROJECT DETAILS

- 474m – 3000mm black PVC chainmesh
- 6 sets – large equal-leaf gates
- 200m – 1200mm black PVC chainmesh
- 650m – 1800mm galvanised PVC chainmesh



SKILLS

TRAINING UPDATE

Building the Skills Our Industry Needs

The skills fencing and gate contractors develop on the job are an important part of Australia's workforce capability.

New research from Jobs and Skills Australia highlights the significant role employers play in helping workers build, apply and develop their skills throughout their careers, including through informal and on-the-job learning.

It also identifies the need for better evidence about where workplace learning occurs and where skills gaps remain.

For Australia's fencing and gate industry, this comes at an important time.

BuildSkills Australia has commenced its Fencing and Gate Industry Project, which will work with industry to identify the skills required by the workforce and develop appropriate training products.

The project is intended to support fencing and gate workers across key areas including commercial, residential, rural and security fencing.

For contractors, this is an opportunity for the practical skills and knowledge used every day on fencing and gate projects to help inform the development of future training products.

Building a clearer picture of the skills required across our industry is an important step towards strengthening workforce capability and developing recognised career pathways for the future.

We're for the fencers.

Proud partner of Fencing Industry Australia

Stratco is **100% Australian owned** with over 75 years of manufacturing excellence in quality products in every State of Australia. Our proud local manufacturing history is well supported by a network of over 45 retail stores specialising in a large range of fencing to support you and fulfil your customer's dreams.

Good Neighbour® • Slat • Batten • Glass • Tubular • Security • Architectural • Screening





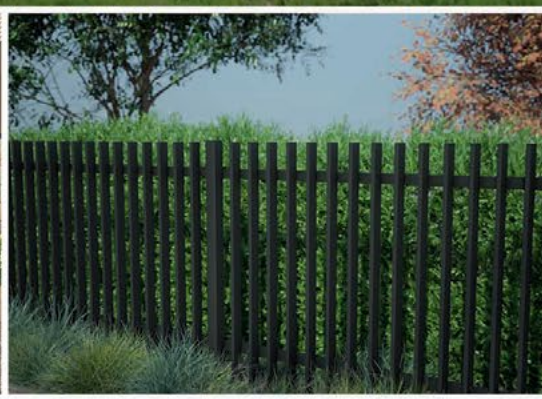

1300 155 155
stratco.com.au

Proud supplier of: Colorbond®

MANUFACTURING SINCE 1948

STRATCO

For National enquiries, contact Jon Hall via jonathan.hall@stratco.com.au

A true piece of Waratah history

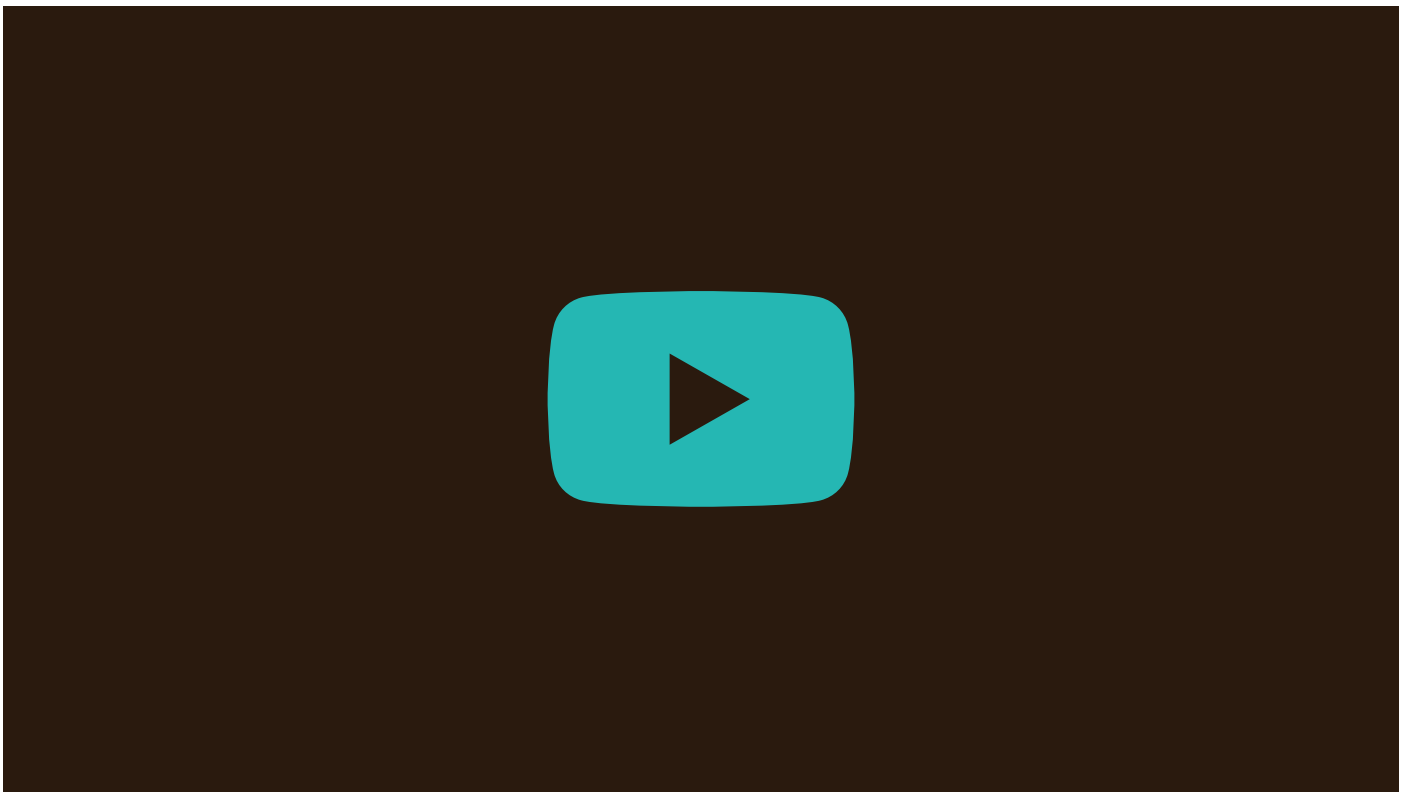

Waratah Fencing looks back at the field day moments that made a lasting impact on Australian agriculture.

Waratah's iconic elephant promotion wasn't just memorable; it became a talking point for years.

Designed to showcase the toughness and flexibility of Waratah fencing products, it drew crowds wherever it went, with farmers, families and kids all stopping by to see the action.

waratahfencing.com.au

profence







Australian manufacturer of high-security fencing systems

Quality without compromise since 1975

AUSTRALIAN MADE AND OWNED

50 YEARS

PROFENCE.COM.AU SALES@PROFENCE.COM.AU 1300 436 200

A neater approach to gate installation

Gate N Fence Products has introduced a new Bolt / Screw / Rivet-on Gudgeon Plate, developed in response to customer feedback.

The new design eliminates the need to feed the trunnion bolt through the gate frame, avoiding the large gap this installation method can leave.

Designed to fit to the back of the gate, the gudgeon plate provides an easy-fit, adjustable setup while creating a neater, more streamlined finished appearance.

The product continues Gate N Fence Products' approach of working with customer feedback to develop new products and redesign existing solutions around practical installation requirements.

NEW PRODUCT
Bolt / Screw / Rivet On Gudgeon Plate
Supplier: Gate N Fence Products



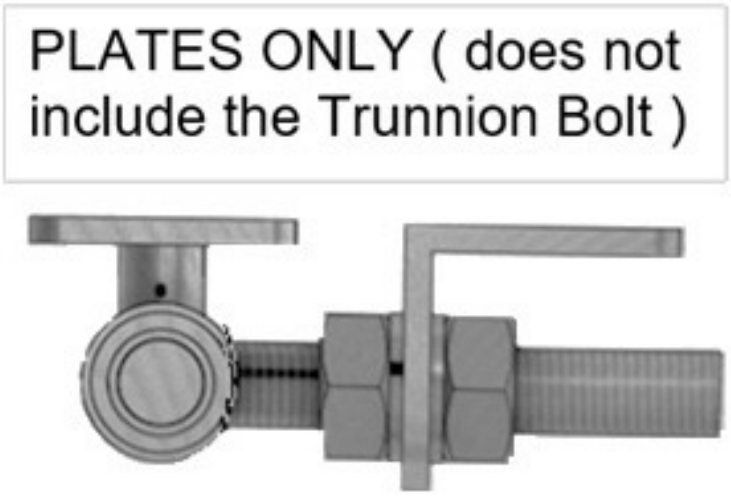

thirdspace
SUSTAINABLE WATER SOLUTIONS

www.thirdspace.build

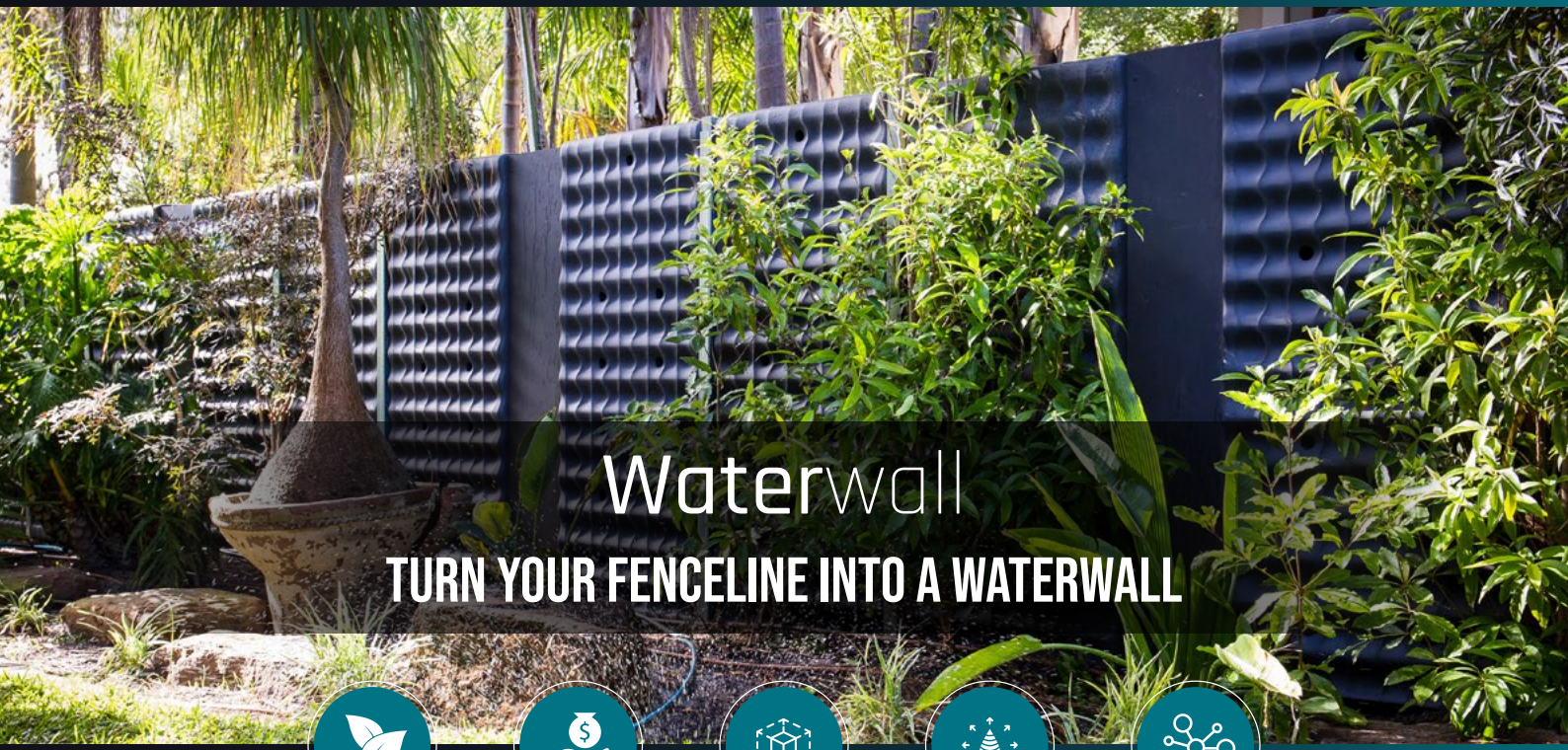

Waterwall

TURN YOUR FENCELINE INTO A WATERWALL

Vertical Gardens | Save Money | Save Space | Capture Water | Accessory Options

The Waterwall allows any property to capture and store rain water in an innovative way, saving valuable space. The system can be customised to fit any lifestyle and need. It's ultra-slim design means the Waterwall can be placed almost anywhere on a property, delineating a boundary fence, as a standalone panel or against an existing structure.

Lasting Engineering, Simple Design

- ✓ Easily installed
- ✓ Maximise garden and valuable land space
- ✓ Save water and money by using rainwater
- ✓ Delineate a boundary or grow a vertical garden
- ✓ Customised colour options
- ✓ Tailored configurations and accessories

Slate | Sandstone | Granite

Ochre | Jade | Bluestone





A gate that means business



Designed and fabricated by Eagle Fabrication and Welding for Marvel Landscapes, this custom aluminium gate creates a distinctive entrance to a rural property in Londonderry, NSW, combining a deliberately simple profile with personalised business branding.

The gate uses 25mm square vertical members, with additional members incorporated into the lower section as “doggy bars”. Rather than introducing unnecessary detailing, the straightforward design allows the centrepiece to take prominence: a laser-cut representation of the Marvel Landscapes logo.

The logo transforms a functional property entrance into a strong visual identifier for the client’s business while retaining a design suited to the rural setting.

Aluminium for the project was supplied by Megastone Aluminium, with the custom logo infill laser cut by ProfileTek.

The project demonstrates how a relatively simple gate design can be individualised through custom fabrication and laser-cut detailing, creating an entrance that serves both a practical and branding purpose.

LOCINOX

Let's make it better together

SCAN FOR MORE INFO



1. Gate Motor: Venus

At the touch of a button, this motorised gate closer allows access to the bike shed.

2. Safety Cable: B-Safe

Stainless Steel Safety Cable for Gates up to 500kg

3. Lock: LAKQ with 3006PUSH HANDLE

The reliable lock with a convenient handle set for easy one-push gate opening.

4. Keep: Modulec-SA

The electric keep is easy to install and features fail-safe unlocking in emergencies.

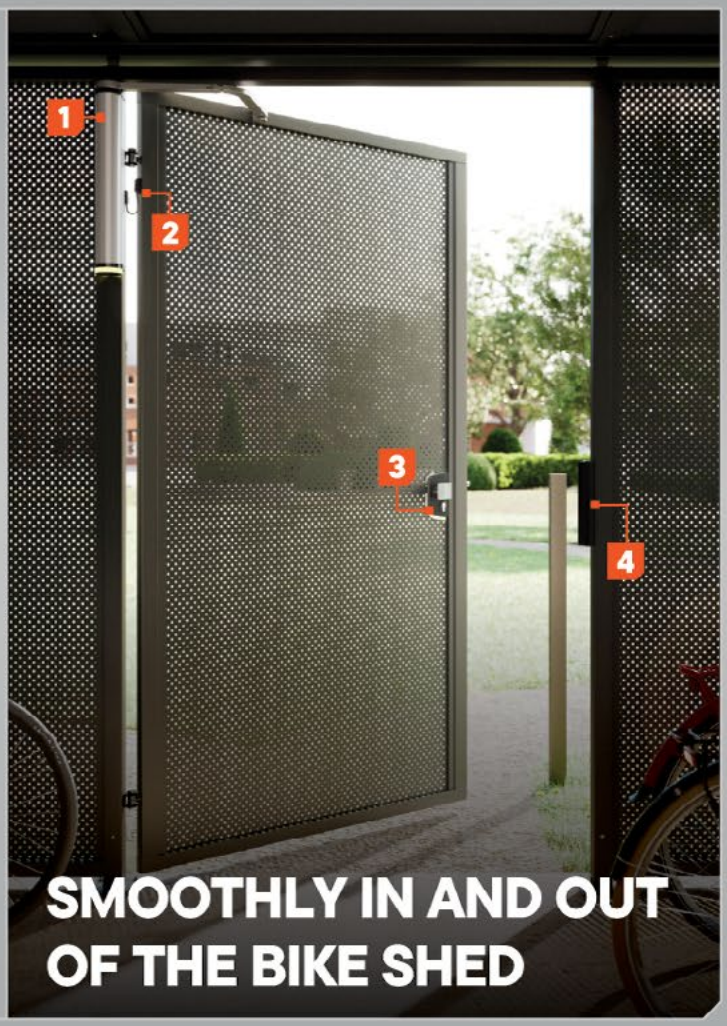

EDGESMITH

TOWER PRO

Designed by Edgesmith. Powered by Roger Technology.

The TOWER PRO is a unique industrial gate operator developed by Edgesmith Australia, featuring the advanced Roger Technology Brushless TOWER110 motor. TW110 with digital controller in pre-wired box, It's a low-voltage system capable of driving **gates up to 2000kg**, combining industrial power with modern efficiency.

Specifications:

Max Gate Weight: **up to 2000kg**

Max Stroke Length: **up to 20m**

Manoeuvre Speed: **12-25m/min (0.2-0.42m/s)**

100% Duty Cycle

SCAN FOR MORE INFO

KEY FEATURES



edgesmith.com.au

The Partner Built For Professionals.

Gallagher i Series Advantage

From Fence Power to Fence Intelligence

A smarter way to power, monitor and manage your fence.

Gallagher i Series energisers are more than just power units; they're a fence management platform that gives you deeper insight into your electric fence's performance.

The I Series can deliver stronger, more reliable fence performance over long distances when combined with Super Earth Kits.

Get 24/7 visibility and reporting on your phone when connected through WiFi/App Gateway or Satellite Gateway.

Enjoy faster fault response, less manual checking, and better protection for livestock and assets when you combine all these fencing components together.

The Gallagher i Series, more than an energiser

The Gallagher i Series is designed for high-performance electric fencing systems where reliable power, monitoring, and control are critical. You can view energiser output voltage, and even adjust the alert status from your phone with Gallagher Devices app.

Gallagher I Series controllers and gateways give you real-time visibility of energiser and fence performance. I Series Fence Monitors also help locate voltage drops, shorts, and faults across larger networks.

Remote monitoring and control mean less time spent physically checking fence lines because you can see your energiser and fence status from anywhere.

The i Series also has multi-powered options. Energisers allow for mains, solar (off-grid installations), so you can always have power no matter the conditions.


GALLAGHER
MBS6500i

BENINCÀ GROUP | AUSTRALIA

BENINCÀ AUSTRALIA Pty Ltd

Unit 15, 51 Owen Street,
Glendenning NSW 2761
info@benincaaustralia.com.au
(02) 9677 2827

Unit 2, 11-13 Wells Road
Oakleigh VIC 3166
info@benincaaustralia.com.au
(03) 7053 1994

Solutions for the residential and collective market

sliding gates | swing gates | automatic doors | garage doors

Solutions for the industrial market

anti-terrorism bollards | boom gates | cantilever sliding gates | roller shutters



100% Made in Italy

Benincà quality for Australia

FOR OVER 40 YEARS, BENINCÀ HAS OFFERED AUTOMATION EQUIPMENT FOR GATES, ROAD BARRIERS, SECURITY BOLLARDS, DOORS, INDUSTRIAL DOORS AND ELECTRONIC ACCESSORIES.

The Group, named after the company founded in 1979, was born from the need to respond specifically to the needs of increasingly demanding markets. Our products combine tradition and innovation, exploiting synergies and shared know-how. Today the Benincà brand is a symbol of Italian style worldwide, thanks to its continuous pursuit in the search for excellence in materials and technologies. The company maintains strict control over production processes, all of which are carried out entirely in Italy.

Discover our solutions
benincaaustralia.com.au



BENINCÀ GROUP

BENINCA TECHNOLOGY TO OPEN | HI MOTIONS | myone | RISE Smart Moving | seav | CAB MORE THAN AUTOMATION

Recreating a classic



How do you replicate the intricate character of an antique handmade gate at a much larger scale?

That was the starting point for Strukta Group's 'Belgium Ivy' project in Tremont, Victoria.

The original design was reinterpreted as a pair of substantial entrance gates, complemented by smaller pedestrian gates and constructed from Queensland cypress and Australian Class 1 hardwoods.

At approximately 200kg each, the entrance gates required more than traditional timber craftsmanship. Fabricated beams and supporting steelwork were set into concrete to carry the gates and achieve the required alignment with the surrounding stonework.

Heavy-duty Australian-made hardware was galvanised and powder coated for the installation.

The result brings the detailing of the original antique gates into a considerably larger, purpose-built entrance.

200kg each - approximate weight of the main gates

TIMBER
Queensland cypress + Australian Class 1 hardwoods

HARDWARE
Heavy-duty, Australian-made, galvanised + powder coated

OTTER FENCING & GATES











SHOP OTTER ONLINE 24/7

otterfencing.com.au



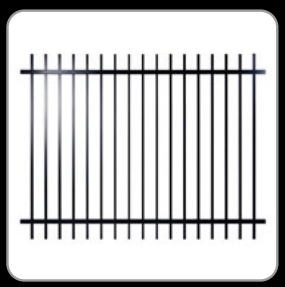



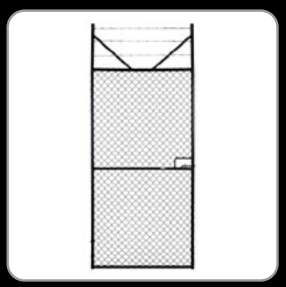



Otter is Australia's leading manufacturer of premium quality fencing and gate supplies.

- Chain-link Fabric
- Tubular Panels
- Welded Mesh Panels
- Temporary Fencing
- Fence Posts and Pipes
- Fence and Gate Fittings
- Powder Coating
- Chain-link Gates
- Tubular Gates
- Welded Mesh Gates
- Wire Products
- Bollards
- Fabrication
- Project Design

Put your business in front of the industry



Exhibit at the 2027 Australian FENCING and GATE Trade Show

Put your products, technology and solutions directly in front of fencing and gate professionals from across Australia.

The 2027 Australian FENCING and GATE Trade Show provides manufacturers, suppliers and service providers with a dedicated industry platform to showcase products, demonstrate new solutions, strengthen existing relationships and make valuable new connections.

With contractors and industry professionals together in one place, exhibiting gives your business the opportunity to have direct conversations with the people who specify, purchase, recommend and use products across the fencing and gate sector.

Trade Show spaces are limited.

Secure your stand and put your business at the forefront of Australia's fencing and gate industry.

BOOK YOUR SPOT



VATER HARDWARE

Vari-Angle Security Fencing range

Flexibilty beyond the competition!

Designed for style and access



TK Decks & Fencing combined traditional picket styling with automated access for this residential frontage in Warragul, Victoria.

Custom-built in-house, the fence and gates were designed to complement the home's neutral exterior and maintain a balanced, symmetrical frontage. A pedestrian gate aligns with the central pathway and front door, while an automated sliding driveway gate integrates into the same fence line.

The installation uses 100 x 100 steel posts with Lynwood post capitals, 40 x 40 aluminium rails and 65 x 16 aluminium slats finished with cast aluminium picket tops. A 150 x 50 aluminium plinth board forms the base of the fence, while the sliding gate incorporates a 50 x 50 and 100 x 50 aluminium frame.

The fence and gates were etch primed and finished with a two-pack Dulux Luxathane HPX coating, producing the high-gloss white finish.

Vehicle access is automated by a FAAC C720 sliding gate motor with photo beams and battery backup.

Location: Warragul, Victoria
Contractor: TK Decks & Fencing

GateSolutions
by Codelocks



XtraD Gate Lock

- ✓ Versatile and robust access control for gates
- ✓ Compatible with heavy duty Codelocks
- ✓ Effortless access for authorised users
- ✓ Designed to withstand harsh conditions
- ✓ Tested to endure over 1,0000,000 cycles
- ✓ Complete Installation Kit provided



Surface Latch

- ✓ Versatile solution for gate control
- ✓ Reliable low traffic access
- ✓ Effortless installation
- ✓ Seamless integration with Codelocks
- ✓ Compatible with PINGuard™ by Codelocks
- ✓ Control access for garden entries and outdoor areas



Magnetic Latch

- ✓ Easy installation
- ✓ Robust all-in-one solution
- ✓ Corrosion-resistance coated latch bolt
- ✓ Includes an Australian Made* Magnetic Latch
- ✓ Compatible with mechanical Marine Grade Codelocks

Controlled access and peace of mind, at your fingertips!

codelocks.com.au
sales@codelocks.com.au
+61 2 9882 1009

CODELOCKS
control + convenience

©2026 Codelocks International Ltd. All Rights Reserved.
*Australian Made and Owned applies to the Magnetic Latch component only.