greenlite™

35 Years
ENERGY EFFICIENCY EXPERTS



Energy Efficiency Product Solutions

2026 PRODUCT CATALOG

1-877-255-0004 | info@greenliteusa.com
www.greenliteusa.com

ENERGY STAR PARTNER
WOMEN OWNED
NMSDC

greenlite™

35 Years ENERGY EFFICIENCY EXPERTS

Table of Contents

Water Conservation

Accessories
Aerators
Showerheads

Weatherization and Insulation

Insulation
Weatherstripping

Energy Conservation

Advanced Power Strips
Air Dry Laundry
Digital Thermometers
Plugs & Switches
Refrigerators

Air Quality & Home Safety

Air Purifiers
CO & Natural Gas Alarms
Dehumidifiers
PIR Occupancy Sensors
Replacement Filters
Smoke Detectors

Smart Home

Smart Lighting
Smart Plugs
Smart Powerstrips
Smart Thermostats

Electrification

Heat Pumps
Induction Cooktops
Lawn Mowers
Smart EV Chargers

HVAC

Air Conditioners
Furnace Air Filters
Furnace Filter Whistles
Ventilation Fans

LED Lighting

LED Bulbs
LED Fixtures

1-877-255-0004 | info@greenliteusa.com
www.greenliteusa.com

ENERGY STAR PARTNER
WOMEN OWNED
NMSDC

Water Conservation - WATER FLOW REGULATOR

Pressure-compensating shower flow regulator designed for utility programs, providing consistent flow from 20–80 psi with tool-free installation, broad fixture compatibility (9–14.2 mm), and color-coded flow options from 1.0 to 2.0 GPM for easy program standardization.

PRODUCT SPECIFICATIONS

Operating Pressure	20 to 80 psi (pressure compensating)
Flow Rates (Color-Coded)	Blue: 1.0gpm Pink 1.2gpm Green: 1.5gpm Light Blue 1.75gpm Red 2.0gpm
Material	Flexible silicone
Installation	Tool-free, hand-tighten only
Compatibility	Tube diameters from 9 to 14.2 mm
Applications	Shower handles, bibs, and pillar taps

DETAILED DIMENSIONS

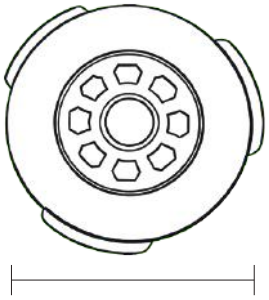

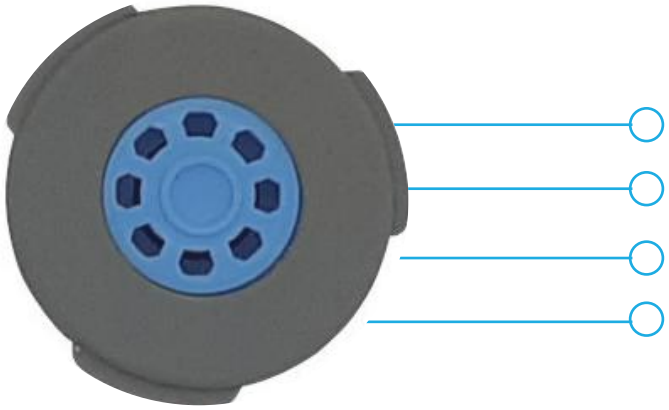

FEATURES

- Consistent, pressure-compensating flow (20-80 psi)
- Fits 9 to 14.2 mm tubes with flexible silicone adapter
- Installs easily with hand tightening only
- Perfect for shower handles, bibs, and pillar taps

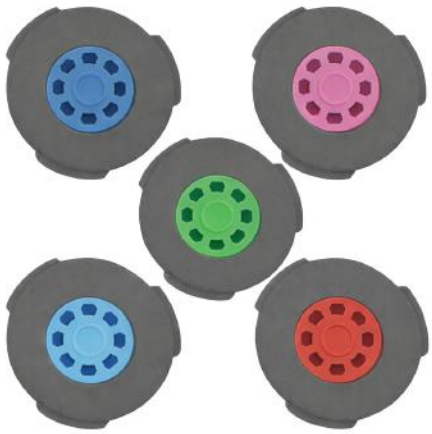

MODEL INFORMATION

MODEL	CASE QTY
TBD	TBD

1-877-255-0004 | info@greenliteusa.com
www.greenliteusa.com

ENERGY STAR PARTNER · WOMEN OWNED · NMSDC

V2-011526

greenlite™

Water Conservation - THERMOSTATIC SHOWER VALVE

This Thermostatic shower valve enhances safety and water conservation by automatically controlling water temperature and flow.

PRODUCT SPECIFICATIONS

Showerhead Type	Accessory
Fitting	1/2” NPT
Temperature Sensor	Yes
Adjustable Spray	N/A
Flow Reduction Temp.	100.4°F
Manual Trickle Valve	Yes
Material	Plated ABS body
Finish	Chrome
Weight	3.1 oz (90 g)
Complies with	(UPC) IAPMO IGC 244-2015a
Warranty	5 years

DETAILED DIMENSIONS

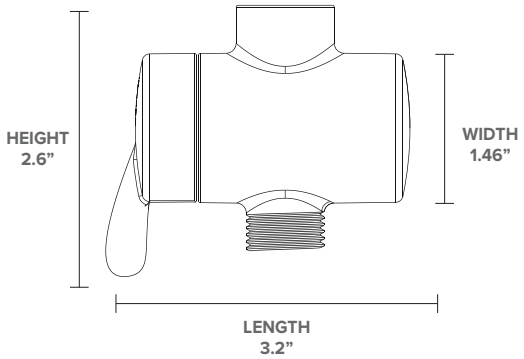



FEATURES

- Automatically reduces flow to a trickle at 100.4°F (38°C)
- Reduce behavioral water waste: automatically controls temp/flow
- Resets automatically for the next use
- Manual override allows for immediate flow resumption



MODEL INFORMATION

MODEL	CASE QTY
WS/SHUTOFFVALVE	24

PACKAGE INCLUSIONS

Washer
Sealing ring
Teflon tape

1-877-255-0004 | info@greenliteusa.com
www.greenliteusa.com

V2 - 02102026

Water Conservation - 7-STAGE GREEN METAL HOSE NOZZLE

Our 7-Spray Water-Saving Hose Nozzle offers versatile options to keep your garden thriving. Choose from mist, soak, or gentle shower settings to give each plant exactly what it needs. Built-in pressure-compensating technology maintains a steady flow no matter the water pressure, while the adjustable volume dial lets you save even more when desired.





PRODUCT SPECIFICATIONS

Flow Rate	2.5 GPM
Thread Connection	Female 3/4”
Functions	7 spray settings
Dimensions	6.2” x 2.3” x 6.1”
Material	Metal Body
Certifications	WaterSense
Warranty	1 Year



FEATURES

- Easy to install
- 7 spray settings: cone, center, flat, soaker, shower, mist, jet
- Provides consistent water flow
- Fits most standard garden hoses



MODEL INFORMATION

MODEL	CASE QTY
TBD	TBD

1-877-255-0004 | info@greenliteusa.com
www.greenliteusa.com

V1-121725

greenlite™

Water Conservation - 7-STAGE BLUE METAL HOSE NOZZLE

Our 7-Spray Water-Saving Hose Nozzle offers versatile options to keep your garden thriving. Choose from mist, soak, or gentle shower settings to give each plant exactly what it needs. Built-in pressure-compensating technology maintains a steady flow no matter the water pressure, while the adjustable volume dial lets you save even more when desired.





PRODUCT SPECIFICATIONS

Flow Rate	2.5 GPM
Thread Connection	Female 3/4”
Functions	7 spray settings
Dimensions	6.2” x 2.3” x 5.9”
Material	Metal Body
Certifications	WaterSense
Warranty	1 Year



FEATURES

- Easy to install
- 7 spray settings: angle, center, flat, soaker, shower, mist, jet
- Provides consistent water flow
- Fits most standard garden hoses



MODEL INFORMATION

MODEL	CASE QTY
TBD	TBD

1-877-255-0004 | info@greenliteusa.com
www.greenliteusa.com

V1-121725

Water Conservation - SHOWER TIMER

A shower timer helps you track how long you shower. Every time the sand runs out and you have to flip it over, another five minutes has passed. This helpful reminder encourages you to save energy and water by taking shorter showers.

PRODUCT SPECIFICATIONS

Water-Saving	Accessory
Hourglass Timer	Sand
Temperature Sensor	Yes
Finish	Plastic
Timer	5 Minutes

DETAILED DIMENSIONS

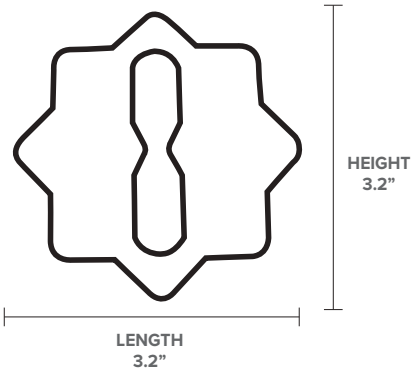

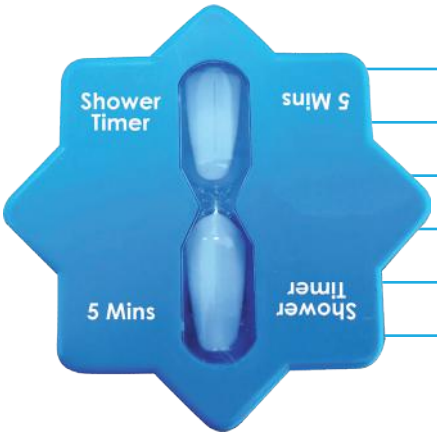

FEATURES

- Star shaped
- 5 minute sand timer
- Lightweight & durable
- Requires no assembly
- Saves water and energy
- Suction cup backing



MODEL INFORMATION

MODEL	CASE QTY
WS/SHOWERTIMER/STAR	100

1-877-255-0004 | info@greenliteusa.com
www.greenliteusa.com

V1-012725

ENERGY STAR PARTNER
WOMEN OWNED
NMSDC

Water Conservation - HOT WATER TEMPERATURE GAUGE CARD

When a water heater is optimally set, users can realize significant savings. This Hot Water Gauge assesses current water heater settings in comparison to ideal settings. These thermometers can be customized with a company message or program theme.

PRODUCT SPECIFICATIONS

Water-Saving	Accessory
Reusable Card	Yes
Temperature Sensor	Thermo Strip
Finish	Plastic
Imprint Area	1.75” x .625”

DETAILED DIMENSIONS

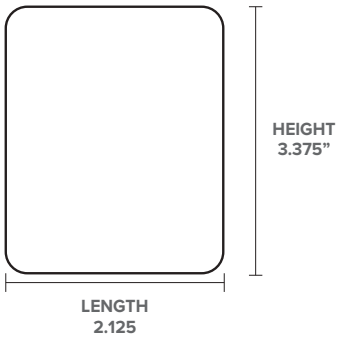

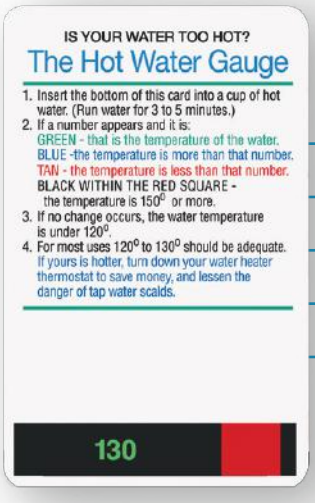

FEATURES

- Easy instruction printed directly on card
- Bendable plastic
- Educates consumers on saving energy in the home.
- Requires no assembly
- Shows you how to set your hot water heater for maximum efficiency and prevent tap water scalding



MODEL INFORMATION

MODEL	CASE QTY
WS/SHOWERTIMER/STAR	100

1-877-255-0004 | info@greenliteusa.com
www.greenliteusa.com

V1-012725

Water Conservation - FLOW RATE BAG

A Greenlite's flow rate bag allows you to check your showerheads and aerators and measure how much water you are using. To use simply place the bag under the showerhead or aerator and turn on the water for 5 seconds. The lines on the bag act as a gallons per minute calculator.

PRODUCT SPECIFICATIONS

Water-Saving	Accessory
Measurements	GPM and LPM
Showerhead Flow Rate	Yes
Faucet Flow Rate	Yes
Finish	Transparent Plastic

DETAILED DIMENSIONS

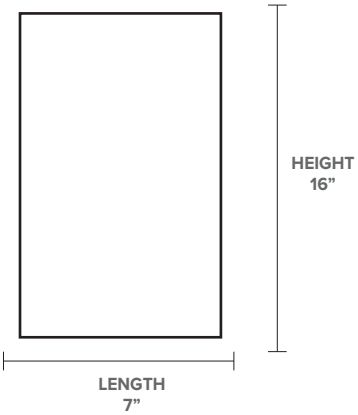

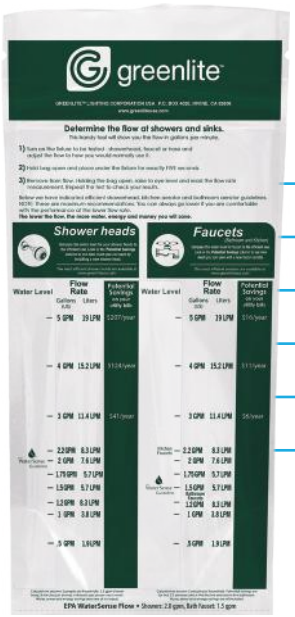

FEATURES

- Sturdy plastic bag
- Easy to use
- Instructions printed on bag
- Reusable
- Saves water and energy
- GPM Markers at 0.5, 1, 1.2, 1.5, 1.75, 2, 2.2, 3, 4, and 5.



MODEL INFORMATION

MODEL	CASE QTY
WS/FLOWRATE/BAG	1000

1-877-255-0004 | info@greenliteusa.com
www.greenliteusa.com

V1-012725

greenlite™

Water Conservation - COLOR-CHANGING BATHROOM & KITCHEN FAUCET AERATOR

LED faucet aerator with built-in temperature sensor engages consumers with a fun, color-changing water experience while promoting daily water use awareness, no batteries required.

PRODUCT SPECIFICATIONS

Operating Power	Hydraulic
LED Colors & Temperature Range	Blue: below 89.6°F Orange: 91.4°F - 107.6°F Red: 109.4°F - 123.8°F Flashing red: above 123.8°F
Flow Rate	1.5 gpm
Thread Type	Dual Thread Adapter
Material	ABS with chrome finish
Stream	Bubble
Warranty	1 year

DETAILED DIMENSIONS

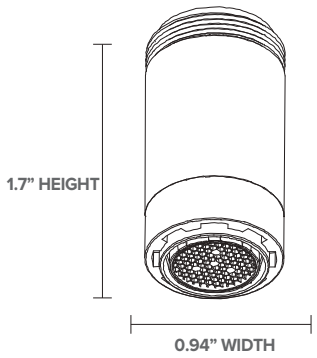



FEATURES

- Color-changing LED for bathroom and kitchen faucets
- Powered by running water for safe, eco-friendly use
- High efficiency 1.5gpm flow helps reduce water waste
- Easy, tool-free installation



MODEL INFORMATION

MODEL	CASE QTY
WS/A/DUAL/LITE/1.5GPM	24

1-877-255-0004 | info@greenliteusa.com

www.greenliteusa.com

ENERGY STAR PARTNER · WOMEN OWNED · NMSDC

V1-033026

greenlite™

Water Conservation - AERATORS

Save water and energy with our pressure-compensating aerators! These innovative faucet attachments deliver a powerful spray while using less water, reducing your utility bills and environmental impact.

PRODUCT SPECIFICATIONS

Material	Durable plastic internal core parts
Finish	Chrome plated
Thread Size/Connection	15/16"-27 male × 55/64"-27 female
Operating/Rated Pressure	20-125PSI/60PSI
Certification	WaterSense, CUPC
Warranty	1 year

DETAILED DIMENSIONS

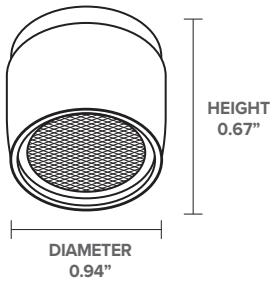



FEATURES

- Saves up to 30% water
- Smooth, non-splashing laminar flow
- Dual-threaded
- Combination aerator (male/female)
- Easy installation

MODEL INFORMATION

MODEL	FLOW RATE	FLOW TYPE	FLOW RATE LPM	CASE QTY
CH/DUAL/0.5GPM	0.5 GPM	Needle spray	1.9	200
CH/DUAL/1.0GPM	1.0 GPM	Bubble spray	3.8	200
CH/DUAL/1.5GPM	1.5 GPM	Bubble spray	5.7	200



1-877-255-0004 | info@greenliteusa.com
www.greenliteusa.com

V4 - 09232026

greenlite™

Water Conservation - KITCHEN SWIVEL AERATOR

Go with the flow, don't let the savings go down the drain! Dual thread for kitchens with Push/Pull feature changes flow from spray to stream. Aerator swivels to reach entire sink. A value-added way to lower flow.

PRODUCT SPECIFICATIONS

Finish	Chrome plated
Thread Type	Dual thread
Spray Type	Single stream, bubble spray
Filter Type	Honeycomb filter screen
Certification	WaterSense
Standard Number	ASME A112.18.1
Warranty	1 year

DETAILED DIMENSIONS

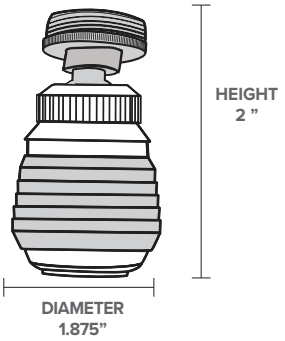



FEATURES

- Saves up to 30% water
- 360° Swivel with push/pull feature
- Dual-threaded
- Combination aerator (male/female)
- Easy installation



MODEL INFORMATION

MODEL	FLOW RATE GPM	FLOW RATE LPM	CASE QTY
CH/SWVL/1.5GPM	1.5 GPM	5.7	200

1-877-255-0004 | info@greenliteusa.com
www.greenliteusa.com

Water Conservation - KITCHEN SWIVEL AERATOR WITH PAUSE

Go with the flow, don't let the savings go down the drain! . The kitchen faucet aerator is a must-have in any kitchen. Adjust the water flow with the flip control to pause the water flow. Every kitchen needs one! This high-efficiency kitchen faucet aerator saves water, energy, and money.

PRODUCT SPECIFICATIONS

Finish	Chrome plated
Thread Type	Dual thread
Spray Type	Single stream
Filter Type	Honeycomb filter screen
Certification	WaterSense
Standard Number	ASME A112.18.1
Warranty	1 year

DETAILED DIMENSIONS

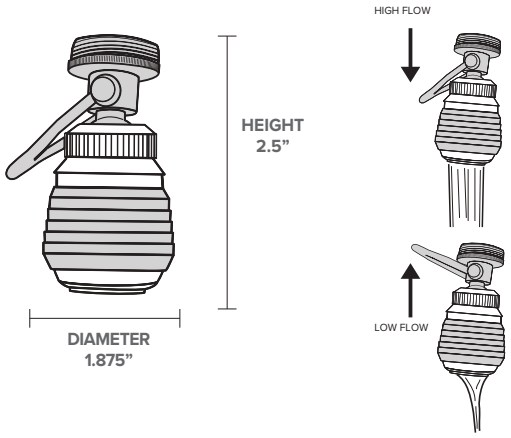

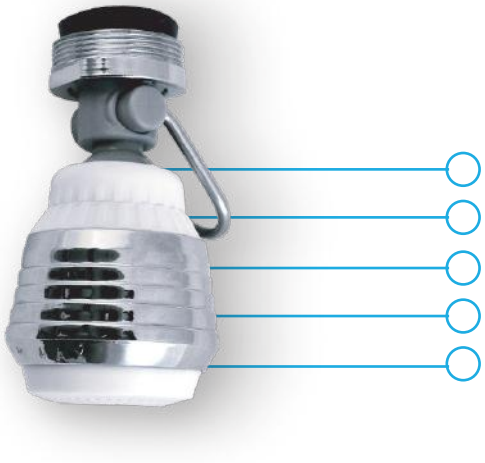

FEATURES

- Saves up to 30% water
- 360° Swivel with pause lever
- Dual-threaded
- Combination aerator (male/female)
- Easy installation



MODEL INFORMATION

MODEL	FLOW RATE GPM	FLOW RATE LPM	CASE QTY
CH/LEVER/1.5GPM	1.5 GPM	5.7	200

1-877-255-0004 | info@greenliteusa.com
www.greenliteusa.com

greenlite™

Water Conservation - HIGH-EFFICIENCY FIXED SHOWERHEAD

High-efficiency showerheads use, on average, less than half the water of a standard showerhead while maintaining a powerful flow. This helps you save water and reduce your electricity bill without compromising the water pressure you're used to!

PRODUCT SPECIFICATIONS

Showerhead Type	Fixed
IP Thread	1/2”
Finish	Chrome
Functions	3 (full, massage, combo)
Application	Bathroom
Certification	WaterSense, UPC
Standard	ASME A112.18.1
Warranty	1 year

DETAILED DIMENSIONS

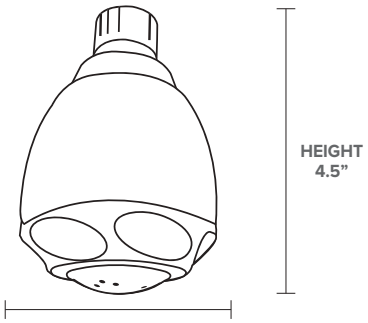



FEATURES

- Reduce your water bill by up to 40%
- 3 spray settings: full, massage, combo
- Consistent flow rate
- Compatible with the TSV adapter
- Sleek & modern chrome finish



MODEL INFORMATION

MODEL	FLOW RATE GPM	FLOW RATE LPM	MIN PSI	MAX PSI	CASE QTY
SHF/CH/3F/1.5GPM	1.5 GPM	5.7	60	80	50
SHF/CH/3F/1.75GPM	1.75 GPM	6.6	20	60	50

1-877-255-0004 | info@greenliteusa.com
www.greenliteusa.com

V1-121124

greenlite™

Water Conservation - HIGH-EFFICIENCY FIXED SHOWERHEAD - 6 FUNCTIONS

Enjoy a customized shower experience with this 6-function fixed showerhead. Choose from Saturate, Massage, Bubble, Saturate & Massage, Saturate & Bubble, or Pause settings to create your perfect shower. Installation is a breeze, with rubber washers and Teflon thread tape included for a leak-free fit. This showerhead meets ANSI/ASME AI12.18.1M standards and is compatible with most standard shower arms, including the TSV adapter to!

PRODUCT SPECIFICATIONS

Flow Rate	1.5 GPM
IP Thread	1/2”
Functions	6 functions
Finish	Chrome
Application	Bathroom
Certifications	WaterSense, UPC
Warranty	1 Year

DETAILED DIMENSIONS

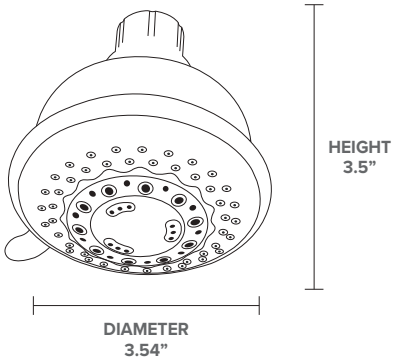

FEATURES

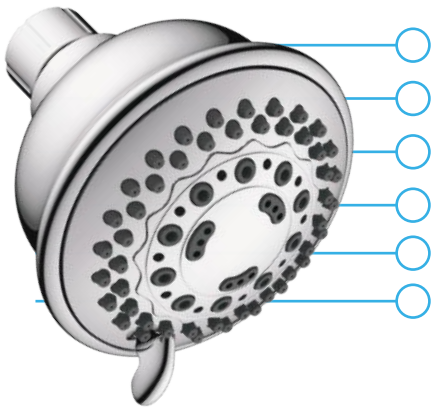

- Easy to install
- Compatible with the TSV adapter
- Meets ANSI/ASMF A112.18.1M standards
- 6 spray settings: saturate, massage, bubble saturate & massage, saturate & bubble, pause
- Less stress on your septic system
- Fits most standard shower arms



MODEL INFORMATION

MODEL	CASE QTY
SHF/CH/6F/1.5GPM	50

1-877-255-0004 | info@greenliteusa.com
www.greenliteusa.com

V1-121224

greenlite™

Water Conservation - HIGH-EFFICIENCY FIXED SHOWERHEAD

High-efficiency showerheads use, on average, less than half the water of a standard showerhead while maintaining a powerful flow. This helps you save water and reduce your electricity bill without compromising the water pressure you're used to!

PRODUCT SPECIFICATIONS

Showerhead Type	Fixed
IP Thread	1/2”
Finish	White high gloss
Functions	3 (full, massage, combo)
Application	Bathroom
Certification	WaterSense, UPC
Standard	ASME A112.18.1
Warranty	1 year

DETAILED DIMENSIONS

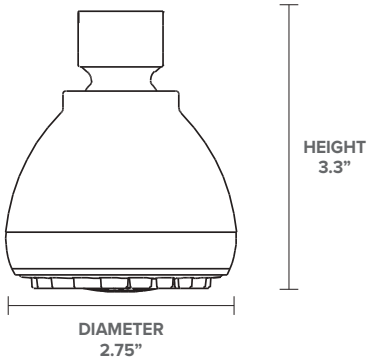

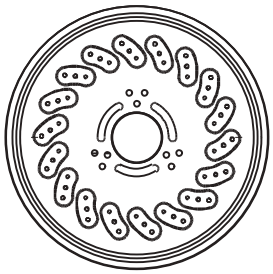



FEATURES

- Reduce your water bill by up to 40%
- 3 spray settings: full, massage, combo
- Consistent flow rate
- Compatible with the TSV adapter
- Sleek & high gloss finish



MODEL INFORMATION

MODEL	FLOW RATE GPM	CASE QTY
SHF/WH/3F/1.5GPM	1.5 GPM	50

1-877-255-0004 | info@greenliteusa.com
www.greenliteusa.com

V1-012325

greenlite™

Water Conservation - HIGH-EFFICIENCY SHOWERHEAD KIT

Low flow high-efficiency showerheads use on average less than half the water of a standard showerhead while maintaining a powerful flow. Save water and reduce your electricity bill without compromising the water pressure you are used to!

PRODUCT SPECIFICATIONS

Flow Rate	1.5 GPM
IP Thread	1/2”
Functions	4 spray settings
Finish	Chrome
Application	Bathroom
Certifications	WaterSense, UPC
Warranty	1 Year

DETAILED DIMENSIONS

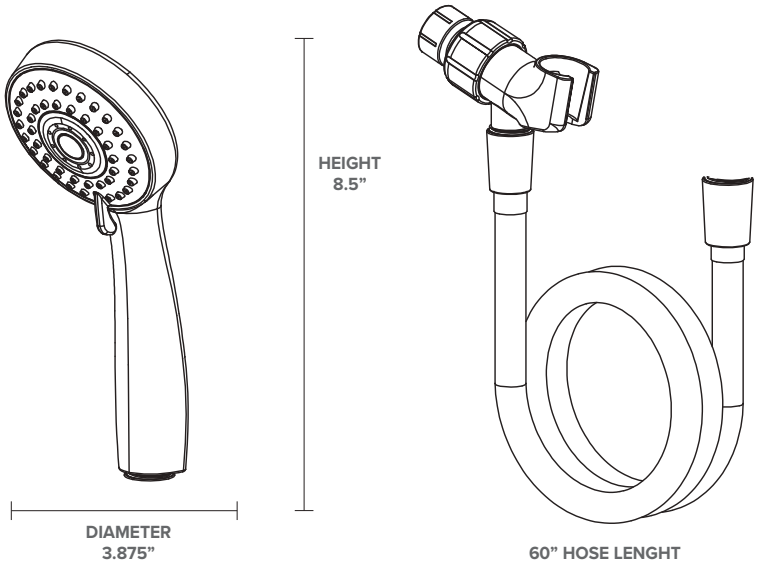



FEATURES

- Easy to install
- Compatible with the TSV adapter
- Meets ANSI/ASMF A112.18.1M standards
- 4 spray settings: saturated, massage, bubble and combo
- Less stress on your septic system
- Fits most standard shower arms



MODEL INFORMATION

MODEL	CASE QTY
HSH/CH/4/1.5/BH	24

1-877-255-0004 | info@greenliteusa.com
www.greenliteusa.com

V1-012725

greenlite™

Water Conservation - HIGH-EFFICIENCY HANDHELD SHOWERHEAD

Low flow high-efficiency showerheads use on average less than half the water of a standard showerhead while maintaining a powerful flow. Save water and reduce your electricity bill without compromising the water pressure you are used to!

PRODUCT SPECIFICATIONS

Flow Rate	1.5 GPM
IP Thread	1/2”
Functions	3 spray settings
Color	White
Application	Bathroom
Warranty	1 Year

DETAILED DIMENSIONS

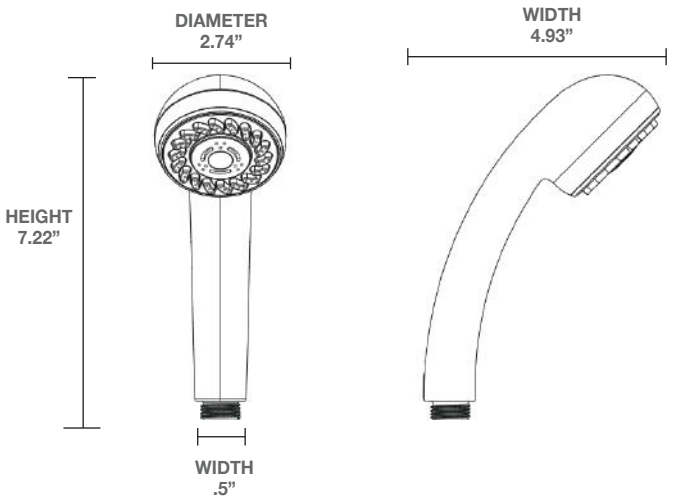



FEATURES

- Easy to install
- Compatible with the TSV adapter
- Meets ANSI/ASMF A112.18.1M standards
- 3 spray settings: saturated, massage, combo
- Less stress on your septic system
- Fits most standard shower arms



MODEL INFORMATION

MODEL	CASE QTY
Handheld/White/1.5GPM/SMM	50

1-877-255-0004 | info@greenliteusa.com
www.greenliteusa.com

ENERGY STAR PARTNER

WOMEN OWNED

NMSDC

V2-121925

greenlite™

Water Conservation - HIGH-EFFICIENCY HANDHELD SHOWERHEAD

Low flow high-efficiency showerheads use on average less than half the water of a standard showerhead while maintaining a powerful flow. Save water and reduce your electricity bill without compromising the water pressure you are used to!

PRODUCT SPECIFICATIONS

Flow Rate	1.5 GPM
IP Thread	1/2”
Functions	3 spray settings
Finish	Chrome
Application	Bathroom
Certifications	WaterSense, UPC
Warranty	1 Year

DETAILED DIMENSIONS

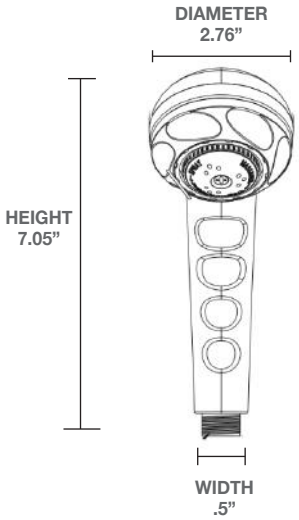



FEATURES

- Easy to install
- Compatible with the TSV adapter
- Meets ANSI/ASMF A112.18.1M standards
- 3 spray settings: saturated, massage, combo
- Less stress on your septic system
- Fits most standard shower arms



MODEL INFORMATION

MODEL	CASE QTY
SHH/CH/3F/1.5GPM	50

1-877-255-0004 | info@greenliteusa.com
www.greenliteusa.com

V1-121224

Weatherization and Insulation - PATIO DOOR OR XL WINDOW INSULATION KIT

This patio door or XL window insulation kit provides a cost-effective solution for improving building energy efficiency. The shrink film and tape create an airtight seal, reducing drafts, condensation, and heat loss. This helps lower energy consumption and heating/cooling costs.

PRODUCT SPECIFICATIONS

Material	Shrink Film
Thickness	0.75 mil
Clarity	Crystal Clear
Durability	Designed to last one heating season
Application	Patio door or large window

DETAILED DIMENSIONS

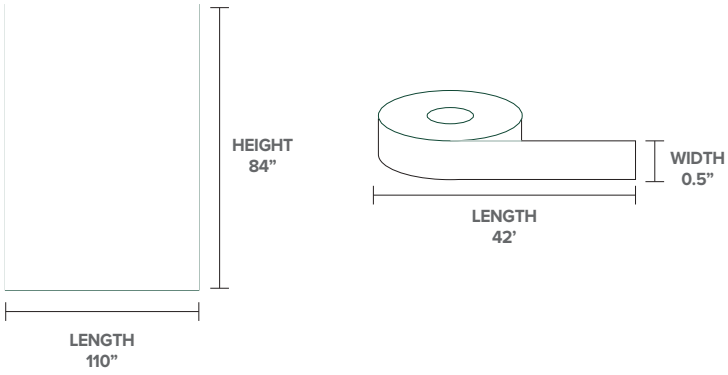



FEATURES

- Crystal-clear film maintains visibility while sealing out cold drafts
- Improves insulating R-value by up to 90% for greater energy efficiency
- Easy installation with included tape and a standard hair dryer
- Wrinkle-free shrink finish ensures a tight, professional look
- Large coverage fits one standard patio door or XL window

KIT INCLUDES

- 1 Plastic crystal-clear sheet
- 2-way tape

TOOLS NEEDED

- Scissors
- Hair dryer



MODEL INFORMATION

MODEL NUMBER	CASE QTY
WX/WI/PATIO	24

1-877-255-0004 | info@greenliteusa.com
www.greenliteusa.com

V1 - 20251120

Weatherization and Insulation - WINDOW INSULATION KIT - 5 WINDOWS

Window insulation kits provide a cost-effective solution for improving building energy efficiency. The shrink film and tape create an airtight seal, reducing drafts, condensation, and heat loss. This helps lower energy consumption and heating/cooling costs.

PRODUCT SPECIFICATIONS

Material	Shrink Film
Thickness	0.75 mil
Clarity	Crystal Clear
Durability	Designed to last one heating season
Application	Window

DETAILED DIMENSIONS

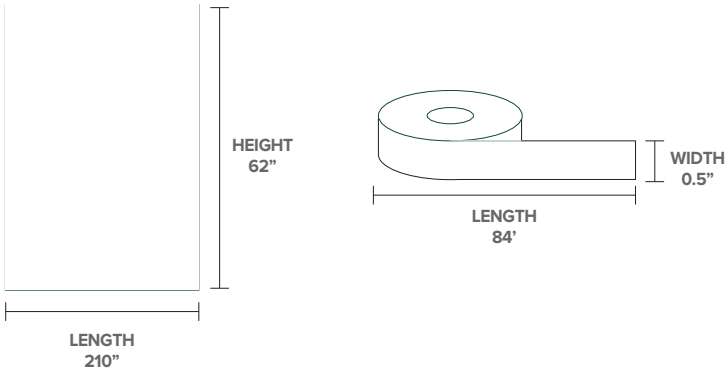



FEATURES

- Economical energy-saving solution & easy to install
- Save up to 35% of heat loss
- Hot & cold air loss prevention
- Tailored size and easy installation
- Covers up to 5 standard-sized windows
- Shrinks tight for wrinkle-free, clear-as-glass results

KIT INCLUDES

- 1 Plastic crystal-clear sheet
- 2-way tape

TOOLS NEEDED

- Measuring tape
- Scissors
- Hair dryer

MODEL INFORMATION

MODEL NUMBER	CASE QTY
WX/WI/5	24



1-877-255-0004 | info@greenliteusa.com
www.greenliteusa.com

V1 - 20250912

Weatherization and Insulation - WINDOW INSULATION SHRINK FILM KIT

Window insulation kits provide a cost-effective solution for improving building energy efficiency. The shrink film and tape create an airtight seal, reducing drafts, condensation, and heat loss. This helps lower energy consumption and heating/cooling costs.

PRODUCT SPECIFICATIONS

Material	Crystal-clear shrink film
Thickness	0.6 mil

DETAILED DIMENSIONS

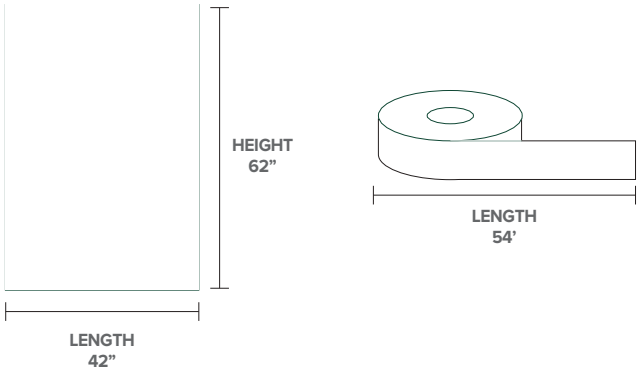



FEATURES

- Economical energy-saving solution
- Save up to 35% of heat loss
- Hot & cold air loss prevention
- Tailored size and easy installation
- Increases R-value by 90% over an average single pane window
- Shrinks tight for wrinkle-free, clear-as-glass results

KIT INCLUDES

3 Plastic crystal-clear sheets
2-way tape

TOOLS REQUIRED

Scissors
Hair Dryer

MODEL INFORMATION

MODEL NUMBER	CASE QTY
WX/WI/3	48



1-877-255-0004 | info@greenliteusa.com
www.greenliteusa.com

V1 - 20250122

greenlite™

Weatherization and Insulation - CLOSED-CELL POLYETHYLENE PIPE INSULATION

This easy-to-install solution improves thermal efficiency in both residential and commercial hot water pipes. By reducing heat loss, it can raise water temperature by 2°F-4°F, saving you energy and money. Plus, its flexible design and pre-slit feature make installation a breeze.

PRODUCT SPECIFICATIONS

Material	Closed-cell polyethylene
Color	Charcoal
R-Value	≥ 3.3
Density	Low
Temp. Range	-90.4°F to 179°F (-68°C to 82°C)
Flame Retardancy	< 100mm/min
R-Value	≥ 3.3

DETAILED DIMENSIONS

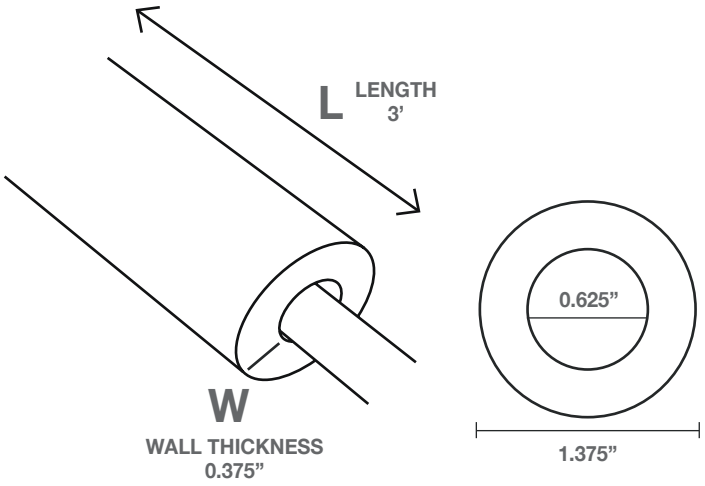



FITS

0.50" Copper Pipe

0.375" PVC Pipe

0.375" Iron Pipe

FEATURES

- Pre-slit for easy installation
- Best for indoor applications such as radiant heat
- Reduces heat loss and freezing
- Reduces condensation and plumbing noise



MODEL INFORMATION

MODEL NUMBER	PACK SIZE	CASE QTY
WX/PI	4 TUBES @3'/EACH	24

1-877-255-0004 | info@greenliteusa.com
www.greenliteusa.com

V1 - 20250123

ENERGY STAR PARTNER · WOMEN OWNED · NMSDC

Weatherization and Insulation - OUTLET AND SWITCH SEALERS

Outlet & Switch Sealers improve building energy efficiency by creating an airtight seal around electrical outlets and switches, reducing drafts and lowering energy costs. Easy to install and reusable, they also enhance safety by preventing tampering.

PRODUCT SPECIFICATIONS

Material	Foam
Application	Outlets and switches
Color	White

DETAILED DIMENSIONS

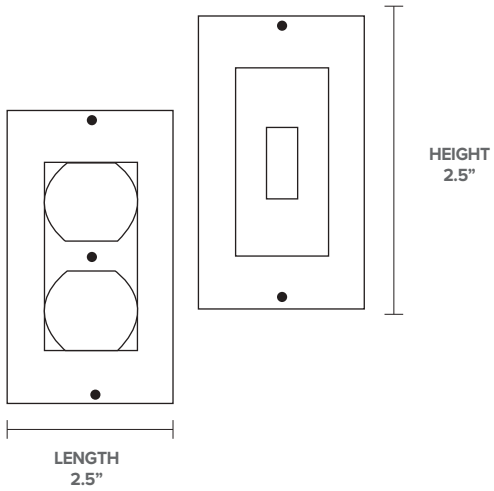

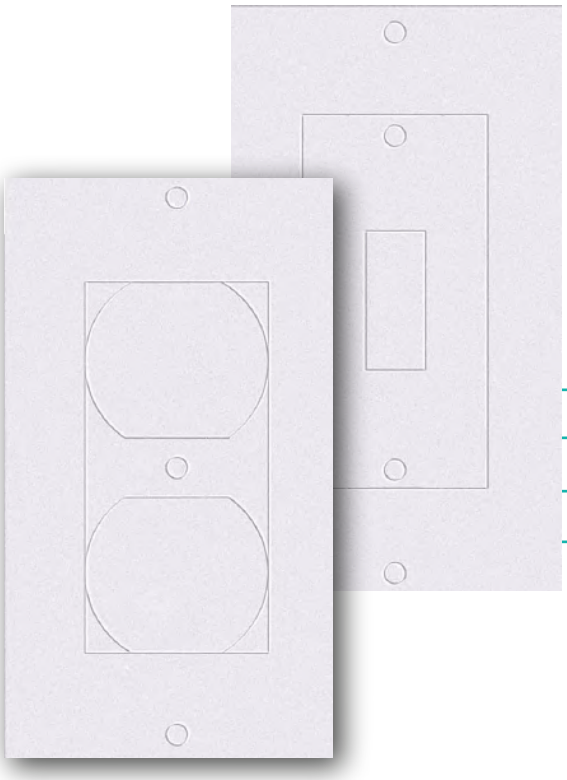

FEATURES

- Fits standard electric outlets and switches
- All-season draft stoppers reduce your energy bill
- Easy installation and removal
- Low-cost solution to seal out drafts

MODEL INFORMATION

MODEL NUMBER	PACK QTY	CASE QTY
WX/5OUT5SWITCH/10	5 switch sealers + 5 outlet sealers	48



1-877-255-0004 | info@greenliteusa.com
www.greenliteusa.com

V2 - 121925

Weatherization and Insulation - AIR SEALING SOCKET SAFETY CAPS

Outlet sealers improve building energy efficiency and safety. They create an airtight seal to prevent drafts, reduce energy costs, and help protect against electrical shock. Easy to install and reusable, they are compatible with standard American outlets.

PRODUCT SPECIFICATIONS

Material	Polypropylene
Application	Socket caos
Color	White

DETAILED DIMENSIONS

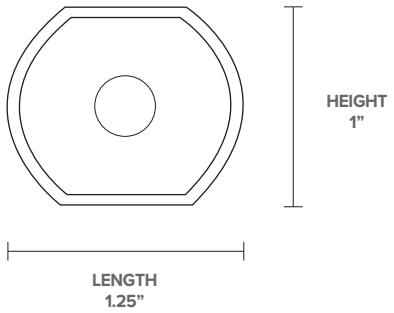



FEATURES

- Stops drafts and saves energy
- Child-safe design
- Easy to install



1-877-255-0004 | info@greenliteusa.com
www.greenliteusa.com

V2 - 01202025

greenlite™

Weatherization and Insulation - D-SECTION WEATHERSEAL

Durable, adhesive-backed weatherstrip seals medium gaps, cuts drafts, and delivers long-lasting energy savings beyond foam tape.

PRODUCT SPECIFICATIONS

Material	Rubber weatherstrip with adhesive backing
Profile Type	D-Section (Medium Gaps)
Application	Self stick
Colors	Brown
Coverage	Seals 1 standard door / 2 average windows
Temp. Range	-40°F to 140°F (-40°C to 60°C)

DETAILED DIMENSIONS

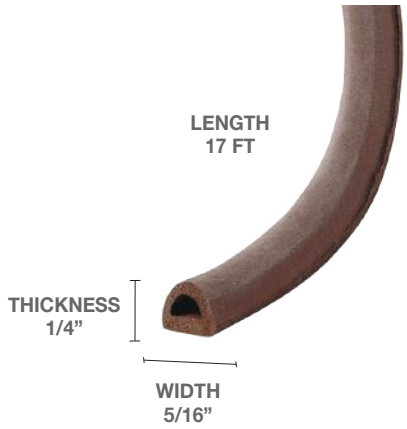



FEATURES

- Seals medium gaps around doors/windows
- High-strength adhesive for secure install
- Flexible in extreme hot or cold
- Outperforms typical foam weatherstrip tapes



MODEL INFORMATION

MODEL NUMBER	CASE QTY
TBD	TBD

1-877-255-0004 | info@greenliteusa.com
www.greenliteusa.com

V1 - 20251215

ENERGY STAR PARTNER
WOMEN OWNED
NMSDC

Weatherization and Insulation - WEATHERSTRIP CAULK SAVER

Closed-cell, flexible polyester foam rod designed for sealing joints and gaps. Non-absorbent, easy to trim, and ideal for weatherproofing, insulation, or caulking applications.

PRODUCT SPECIFICATIONS

Material	Closed-cell foam
Shape	Round (cylindrical)
Application	Indoor or outdoor use
Color	Gray
Density	~1.6-2.2 lbs per cubic foot (cbf) Low density for easy compression
Compression	Up to 75%
Temperature Resistance	-40°F to 180°F (-40°C to 82°C)

DETAILED DIMENSIONS

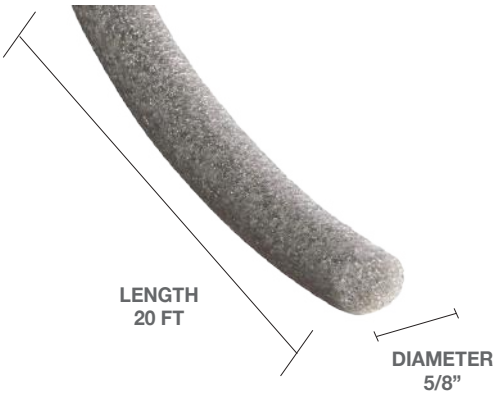



FEATURES

- Reduces caulk use efficiently
- Fits pavement and wall joints
- Flexible and easy to install
- Easy installation



MODEL INFORMATION

MODEL NUMBER	LENGTH	WIDTH	CASE QTY
TBD	20’	0.625”	

1-877-255-0004 | info@greenliteusa.com
www.greenliteusa.com

V1 - 20251015

greenlite™

Weatherization and Insulation - DOOR SWEEP

Seal out those pesky drafts and say hello to savings with Greenlite's Door Sweep! This easy-to-install sweep blocks cold air, keeps your home cozy, and helps lower energy bills. Made from durable materials, it's a simple solution for year-round comfort and energy efficiency.

PRODUCT SPECIFICATIONS

Material	Flexible silicone
Application	Self-stick
Color	Clear
Warranty	1 year

DETAILED DIMENSIONS

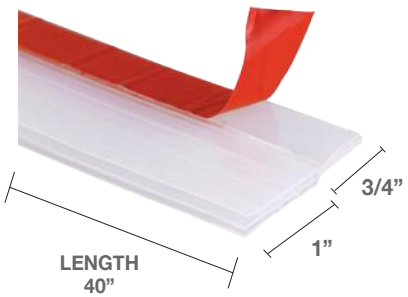

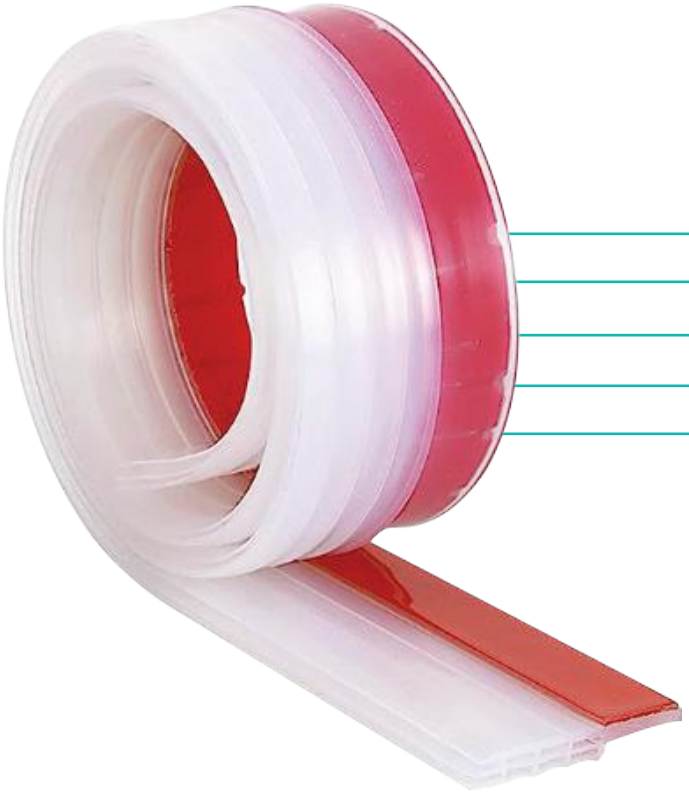

FEATURES

- Insulates doors & reduces your energy bill
- Easy to install cut-to-size
- Hot & cold air loss prevention
- Strong, high-quality silicone strip
- 1 strip fits one standard door frame



MODEL INFORMATION

MODEL NUMBER	PACK QTY	HEIGHT	LENGTH	CASE QTY
WX/DS/WH	1	1.75”	40”	50
WX/DS/WH/2	2	1.75”	40”	24

1-877-255-0004 | info@greenliteusa.com
www.greenliteusa.com

V1 - 20250122

ENERGY STAR PARTNER
WOMEN OWNED
NMSDC

Weatherization and Insulation - V-SEAL WEATHERSTRIP

Keep the heat inside with this V-Seal weatherstrip which seals out drafts, prevents heat loss, and improve energy efficiency on doors, windows, attic hatches, and around air conditioners. Pre-scored, flexible polypropylene offers outstanding conformability for a positive air-tight seal.

PRODUCT SPECIFICATIONS

Material	Pre-scored polypropylene
Application	Self-stick
Color	Clear

DETAILED DIMENSIONS

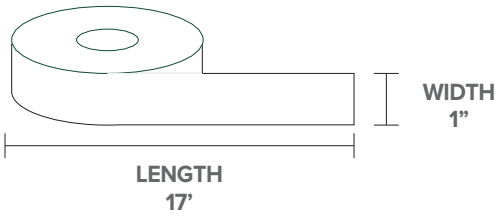



FEATURES

- V-Shaped design for optimal compression
- All-season draft seal reduces your energy bill
- Easy installation and customizable size
- Seals tops and sides of doors and windows



MODEL INFORMATION

MODEL NUMBER	CASE QTY
WX/VSEAL	

1-877-255-0004 | info@greenliteusa.com
www.greenliteusa.com

V1 - 20250122

greenlite™

Weatherization and Insulation - WEATHERSTRIP FOAM TAPE

Increase energy efficiency and improve building performance with our easy-to-apply waterproof sealing tape. This closed-cell foam tape effectively seals gaps to block drafts, reduce noise, and prevent dust and pest infiltration.

PRODUCT SPECIFICATIONS

Material	Pressure-sensitive acrylic adhesive
Composition	Closed-cell 100% PVC foam
Application	Self-stick
Color	Gray
Warranty	2 years

DETAILED DIMENSIONS

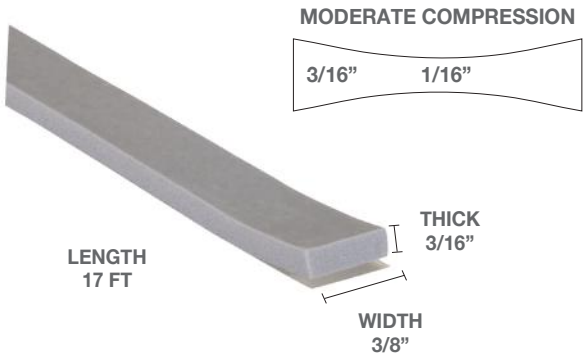

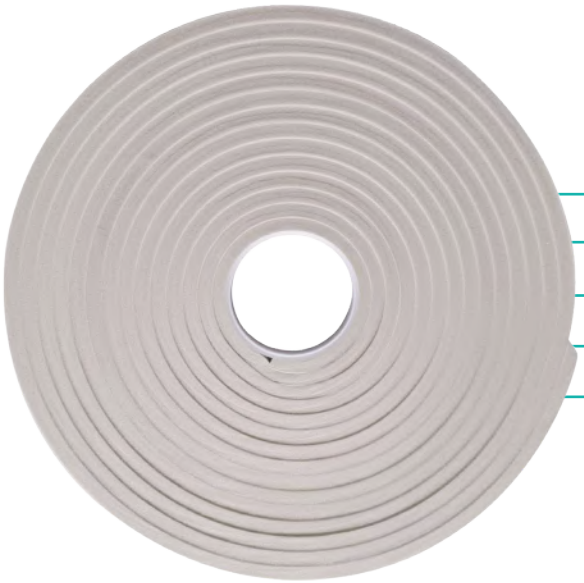

FEATURES

- Self-stick draft seal
- Energy-saving insulation for indoor & outdoor windows
- Easy to install, cut-to-size
- Waterproof, airtight, and dustproof closed-cell foam
- Peel-and-stick application



MODEL INFORMATION

MODEL NUMBER	LENGTH	WIDTH	HEIGHT	CASE QTY
WS/WX/GREY	17’	0.375”	0.1875”	24/48

1-877-255-0004 | info@greenliteusa.com
www.greenliteusa.com

V1 - 20250122

ENERGY STAR PARTNER
WOMEN OWNED
NMSDC

Weatherization and Insulation - ROPE CAULK

Keep the heat inside with this rope caulk which presses in place to seal out drafts, prevent heat loss, and improve energy efficiency on doors, windows, attic hatches, and around air conditioners.

PRODUCT SPECIFICATIONS

Material	Butyl rubber
Application	Fingertip self-stick
Color	Grey

DETAILED DIMENSIONS

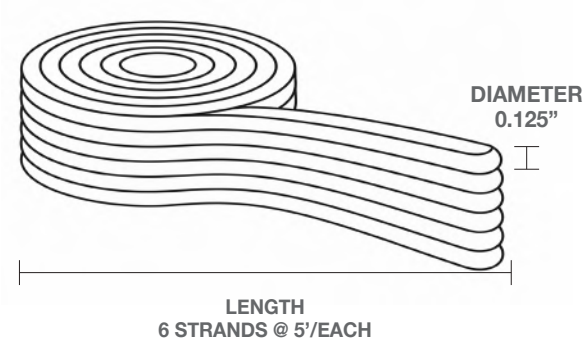



FEATURES

- Waterproof, airtight and dust proof
- All-season draft seal reduces your energy bill
- Easy installation and customizable size
- Seals tops and sides of doors and windows



MODEL INFORMATION

MODEL NUMBER	CASE QTY
WX/RC	24

1-877-255-0004 | info@greenliteusa.com
www.greenliteusa.com

V1 - 20250123



Energy Conservation

NEW for 2026

Advanced Powerstrips:
Redesigned for better installation rates

- Product labeling features icons and simplified outlet labels
- Packaging with infographic-style guidance
- Clear, illustrated installation guide
- Dedicated APS support page

1-PACK & 2-PACK AVAILABLE



compact

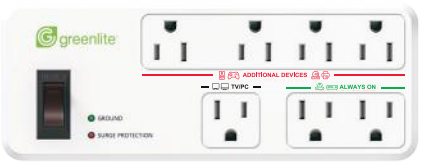

TIER 1 ADVANCED POWERSTRIP - 7 OUTLET (1 OR 2 PACK)

- New compact size ideal for kits
- Space saving design



DOUBLE OUTLET POWER SWITCH

- Simple ON/OFF control
- Saves energy instantly



OUTDOOR TIMER

- Reduces wasted electricity
- Powers multiple devices



TIER 1 ADVANCED POWERSTRIP - 5 OUTLET + USB

- Reduces wasted energy
- Saves heating energy

IDEAL FOR :

Retail Programs | School Kits | Welcome Kits & Direct Mail Kits | Ecommerce & LTOs | Small Business Kits | Direct Install Procurement | Food Bank Programs | Non-Profit Organization Programs (CBO/CAA)

Energy Conservation - TIER 1 ADVANCED POWER STRIP – 7 OUTLETS - COMPACT

Newly designed for higher install rates. Save energy and protect your devices with this smart power strip. Automatically powers off unused devices and provides surge protection.

PRODUCT SPECIFICATIONS

Voltage	125 VAC
VPR Rating	VPR 800V (L-N) 800V (L-G, N-G)
Power Rating	15A 125VAC 60Hz
Surge Protection	1440 Joules, 1875W
Input Plug Type	Type 3 SPD
On/off Resettable Circuit Break	Rated 15A
Max Total Spike Voltage	6000V
Max Total Spike Current	3000A
Clamping Response Time	< 1ns
Standby Power	< 1W
Minimum Control Outlet Switched On Power	10W±2W
Operating Temperature	-4°F ~ 113°F
Cable	14AWG 36 inches
Weight	500g
Certifications	FCC, ETL
Warranty	2 Years

DETAILED DIMENSIONS

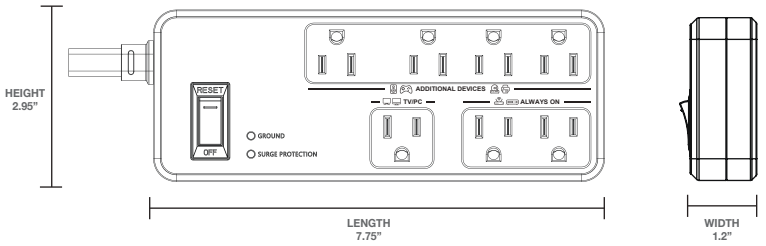

FEATURES

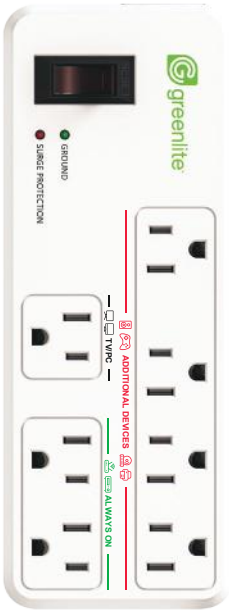

- 1440 Joules
- Reduces standby power
- Compatible with >99% TVs
- Resettable circuit breaker
- 3 FT. Power cord
- Space-saving angled plug

7 OUTLETS

2 X ALWAYS-ON OUTLETS
- DVR/Router
- Modem/Cable/Satellite

4 X ADDITIONAL DEVICES OUTLETS
- DVD/Blu-ray
- Game Console
- Printer/Copier
- AV Receiver

1X TV/PC OUTLET
- TV
- PC

WARNING: For indoor use in dry locations only. Not intended for use with aquarium equipment, microwaves, electric kettles, refrigerators, freezers, air conditioners, electric heaters, or other high-power appliances. Do not use with power drills, bench saws, or other power tools. The combined load used on all outlets at the same time must not exceed 1800 watts. In case of overloading, the circuit breaker will safely shut off all power. Eliminate the overload, then reset by pressing the circuit breaker switch. CAUTION: RISK OF ELECTRIC SHOCK, DO NOT PLUG INTO ANOTHER RELOCATABLE POWER STRIP OR AN EXTENSION CORD.



MODEL INFORMATION

MODEL	CASE QTY
APS/T107M1S4/I01	36

1-877-255-0004 | info@greenliteusa.com

www.greenliteusa.com

V1-100825

greenlite™

Energy Conservation - TIER 1 ADVANCED POWER STRIP – 5 OUTLETS WITH USB PORTS

Newly designed for higher install rates. Save energy and protect your devices with this smart power strip. Automatically powers off unused devices and provides surge protection.

plug & play | c ETL us LISTED Intertek | RoHS

PRODUCT SPECIFICATIONS

Voltage	125 VAC
VPR Rating	700V L-N, 900V N-G, L-G, TYPE 3 SPD
Power Rating	15A 125VAC 60Hz
Maximum Continuous Operating Voltage	210 VAC
Surge Protection	1225 Joules, 1875W
On/off Resettable Circuit Break	Rated 15A
Max Total Spike Voltage	6000V
Max Total Spike Current	3000A
Clamping Response Time	< 1ns
Standby Power	< 1W
Minimum Control Outlet Switched On Power	10W±2W
Plug Type	Wall mounted
Certifications	cETLus, RoHS
Warranty	2 years

5 OUTLETS WITH 2 USB PORTS

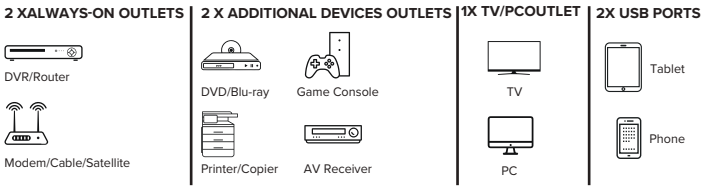

WARNING: For indoor use in dry locations only. Not intended for use with aquarium equipment, microwaves, electric kettles, refrigerators, freezers, air conditioners, electric heaters, or other high-power appliances. Do not use with power drills, bench saws, or other power tools. The combined load used on all outlets at the same time must not exceed 1800 watts. In case of overloading, the circuit breaker will safely shut off all power. Eliminate the overload, then reset by pressing the circuit breaker switch. CAUTION: RISK OF ELECTRIC SHOCK, DO NOT PLUG INTO ANOTHER RELOCATABLE POWER STRIP OR AN EXTENSION CORD.

DETAILED DIMENSIONS

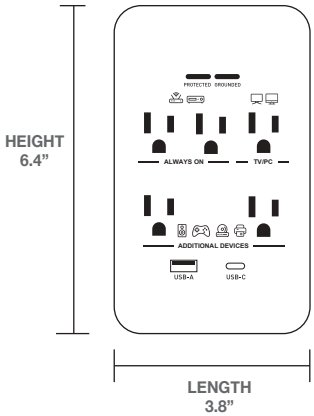

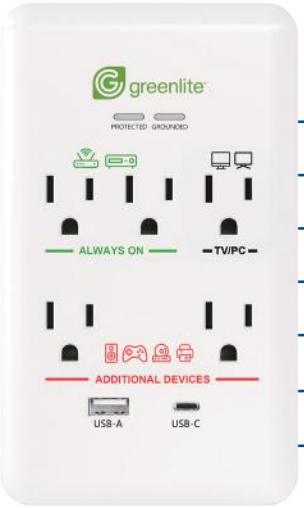

FEATURES

- 1225 Joules
- Reduces standby power
- Compatible with >99% TVs
- Prolongs life of electronics
- Compact wall-mount design
- USB-A/USB-C charging ports
- Built-in shelf



MODEL INFORMATION

MODEL	CASE QTY
APS/T1O5USB	36

1-877-255-0004 | info@greenliteusa.com

www.greenliteusa.com

ENERGY STAR PARTNER | WOMEN OWNED | NMSDC

V1-121825

Energy Conservation - TIER 1 ADVANCED POWER STRIP – 5 OUTLETS

Newly designed for higher install rates. Save energy and protect your devices with this smart power strip. Automatically powers off unused devices and provides surge protection.

PRODUCT SPECIFICATIONS

Voltage	125 VAC
VPR Rating	700V L-N,L-G, N-G TYPE 3 SPD
Power Rating	15A 125VAC 60Hz
Maximum Continuous Operating Voltage	127 VAC
Surge Protection	1225 Joules, 1875W
On/off Resettable Circuit Break	Rated 15A
Max Total Spike Voltage	6000V
Max Total Spike Current	3000A
Clamping Response Time	< 1ns
Standby Power	< 1W
Minimum Control Outlet Switched On Power	10W±2W
Plug Type	Wall mounted
Certifications	cETLus, RoHS
Warranty	2 years

5 OUTLETS

2 X ALWAYS-ON OUTLETS

DVR/Router

Modem/Cable/Satellite

2 X ADDITIONAL DEVICES OUTLETS

DVD/Blu-ray

Game Console

Printer/Copier

AV Receiver

1X TV/PCOUTLET

TV

PC

WARNING: For indoor use in dry locations only. Not intended for use with aquarium equipment, microwaves, electric kettles, refrigerators, freezers, air conditioners, electric heaters, or other high-power appliances. Do not use with power drills, bench saws, or other power tools. The combined load used on all outlets at the same time must not exceed 1800 watts. In case of overloading, the circuit breaker will safely shut off all power. Eliminate the overload, then reset by pressing the circuit breaker switch. CAUTION: RISK OF ELECTRIC SHOCK, DO NOT PLUG INTO ANOTHER RELOCATABLE POWER STRIP OR AN EXTENSION CORD.

MODEL INFORMATION

MODEL	CASE QTY
APS/T105M1S2TT/A01	36

DETAILED DIMENSIONS

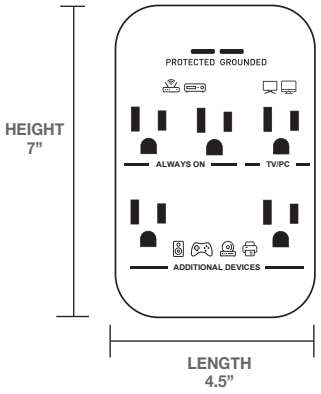

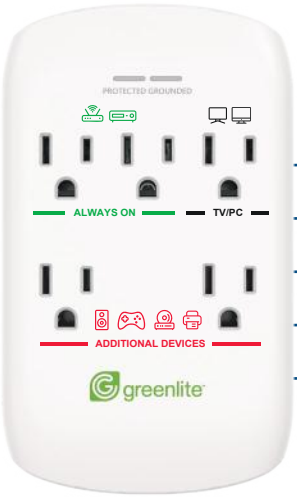

FEATURES

- 1225 Joules
- Reduces standby power
- Compatible with >99% TVs
- Prolongs life of electronics
- Compact wall-mount design



1-877-255-0004 | info@greenliteusa.com
www.greenliteusa.com

V1-121825

Energy Conservation - TIER 1 ADVANCED POWER STRIP – 7 OUTLETS

Newly designed for higher install rates. Save energy and protect your devices with this smart power strip. Automatically powers off unused devices and provides surge protection.

PRODUCT SPECIFICATIONS

Voltage	125 VAC
VPR Rating	500V L-N 600V L-G N-G
Power Rating	15A 125VAC 60Hz
Maximum Continuous Operating Voltage	127 VAC
Surge Protection	1440 Joules, 1875W
On/off Resettable Circuit Break	Rated 15A
Max Total Spike Voltage	6000V
Max Total Spike Current	3000A
Clamping Response Time	< 1ns
Standby Power	< 1W
Minimum Control Outlet Switched On Power	12W±2W
Maximum Control Outlet Standby Power	12W
Max Operating Temperature	105°F
Cable	SJT 14AWG/3C 36 inches
Weight	500g
Certifications	FCC, ETL/cETL
Warranty	2 years

WARNING: For indoor use in dry locations only. Not intended for use with aquarium equipment, microwaves, electric kettles, refrigerators, freezers, air conditioners, electric heaters, or other high-power appliances. Do not use with power drills, bench saws, or other power tools. The combined load used on all outlets at the same time must not exceed 1800 watts. In case of overloading, the circuit breaker will safely shut off all power. Eliminate the overload, then reset by pressing the circuit breaker switch. CAUTION: RISK OF ELECTRIC SHOCK, DO NOT PLUG INTO ANOTHER RELOCATABLE POWER STRIP OR AN EXTENSION CORD.

MODEL INFORMATION

MODEL	CASE QTY
APS/T107M1S4/I02	36

DETAILED DIMENSIONS

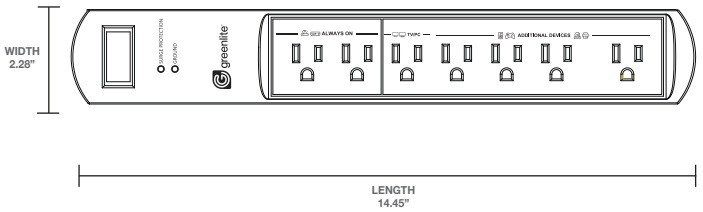

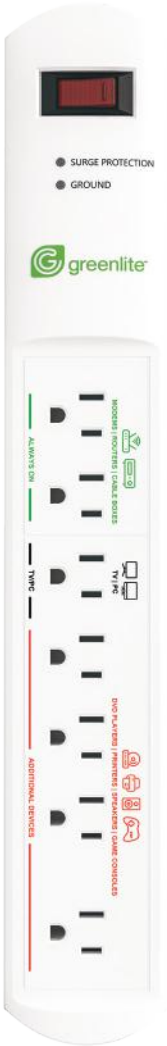

FEATURES

- 1440 Joules
- Reduces standby power
- Compatible with >99% TVs
- 3 FT. Heavy-duty power cord
- Resettable circuit breaker

7 OUTLETS

2 X ALWAYS-ON OUTLETS

DVR/Router

Modem/Cable/Satellite

4 X ADDITIONAL DEVICES OUTLETS

DVD/Blu-ray

Game Console

Printer/Copier

AV Receiver

1X TV/PCOUTLET

TV

PC



1-877-255-0004 | info@greenliteusa.com
www.greenliteusa.com

V1-121825

greenlite™

Smart Home - WI-FI ADVANCED POWERSTRIP

Take control of your home's power with Greenlite's Surge 6-outlet Smart Wi-Fi Power Strip. Turn electronics on/off from anywhere using your phone or voice assistants, and schedule devices to save energy. One "Always on" outlet and 5 outlets that can be controlled with the Greenlite App. The added surge protection keeps your electronics safe and organized. Simply plug in and connect to Wi-Fi for a smarter, more convenient home.

Intertek

GREENLITE APP



FEATURES

- 1 x "Always On" outlet
- 5 x Independently controlled outlets
- Safeguards your valuable electronics from power surges
- Set schedules to automatically turn devices on/off
- Voice control with Amazon Alexa or Google Assistant
- Control devices using the Smart App



1-877-255-0004 | info@greenliteusa.com
www.greenliteusa.com

ENERGY STAR PARTNER

WOMEN OWNED

NMSDC

Perfect for busy households

Manage multiple devices with ease, from lamps and fans to electronics and holiday decorations. Schedule your lights and appliances to turn off automatically when not in use, reducing wasted energy.

DETAILED DIMENSIONS

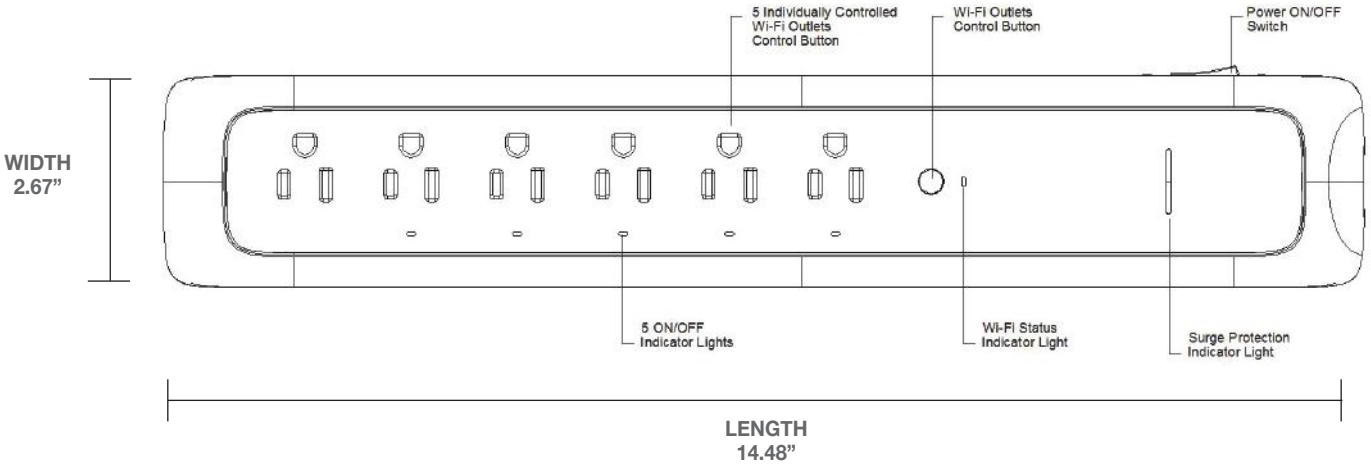

PRODUCT SPECIFICATIONS

General	
Input	125 VAC, 15 A
Rating	15A 125VAC 60Hz 1875W
Standby Power	<0.5W
Surge Protection	490/980/1225 Joules
Material	UL 94-V0 Flame Retardant PC
UL Clamping Voltage	700V L-N
Weight	520g+/-10%
Dimensions (L X W X H)	14.48”x 2.67” x 1.18”
Cable	SJT 14AWG/3C 36 inches
Operating Temperature	-20-40℃
Warranty	
Warranty	1 year
Certifications	
Certifications	FCC, ETL/cETL



1-877-255-0004 | info@greenliteusa.com
www.greenliteusa.com

ENERGY STAR PARTNER
WOMEN OWNED
NMSDC

greenlite™

Energy Conservation - DRYING RACK

A fold-flat drying rack that supports energy savings by enabling indoor or outdoor air-drying. Its reinforced center rod adds stability in windy conditions, while non-slip feet protect floors. Compact for easy storage and ideal for utility and LMI programs.

PRODUCT SPECIFICATIONS

Construction	Stainless Steel
Application	Indoor and Outdoor
Adjustable Length	48” to 63”
Dimensions	Min 47” L x 20” W x 48” H Max 63” L x 20” W x 48” H



FEATURES

- Reduces electric dryer use
- Folds flat for storage
- Stable in indoor/outdoor use
- Non-slip, floor-safe feet



MODEL INFORMATION

MODEL	CASE QTY
TBD	

1-877-255-0004 | info@greenliteusa.com
www.greenliteusa.com

V1-012325

ENERGY STAR PARTNER

WOMEN OWNED

NMSDC

Energy Conservation - DIGITAL THERMOMETER

This temperature measurement tool has an easy-to-read digital display screen. It shows the temperature between -17~+150°F. Keep track of the temperature anywhere at home!

PRODUCT SPECIFICATIONS

Measurement Range	-17~+150°F
Temp. Display Accuracy	+/-2°F
Display Size	1.06" x 0.35"
Product Size	1.57" x 0.98" x 2.24"



FEATURES

- Waterproof
- Easy-to-read digital display
- Suction cup easily attaches to most surface



MODEL INFORMATION

MODEL	CASE QTY
DIGTHERM	48

1-877-255-0004 | info@greenliteusa.com
www.greenliteusa.com

V1-012325

greenlite™

Energy Conservation - DOUBLE OUTLET POWER SWITCH

ETL-listed wall adapter expands a single outlet into two grounded connections. Compact, safe, and space-saving. Ideal for energy efficiency kits and customer programs.

PRODUCT SPECIFICATIONS

Power Supply	125VAC/ 60Hz
Max Current	15A
Max Wattage	1875W
Application	Indoor
Outlet type	2 electrical outlets
Overload protection	2 on/off power switch
Material	ABS plastic
Mounting type	Plug-in Wall Mounted
Color	White
Certifications	ETL Listed
Warranty	1 year

DETAILED DIMENSIONS

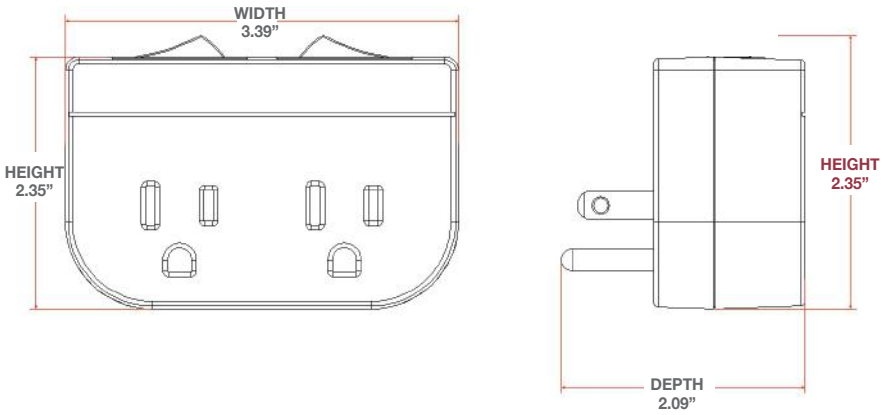



FEATURES

- Individually control two devices
- Compact, in-wall space saver
- Keeps second outlet accessible
- Perfect for lamps or decor

MODEL INFORMATION

MODEL	CASE QTY
HA/2PSWITCH	

1-877-255-0004 | info@greenliteusa.com
www.greenliteusa.com

V1-09292025

greenlite™

Energy Conservation - OUTDOOR TIMER

Durable, ETL-listed outdoor timer with dusk-to-dawn sensor and customizable countdown options. A turnkey solution to simplify outdoor lighting while improving energy efficiency.

Intertek

PRODUCT SPECIFICATIONS

Power Supply	125VAC/ 60Hz ; 1/2 HP
Max Current	15A
Max Wattage	1875W
Timer Type	Analog/Mechanical Dial. / Countdown
Timer outlets	2 Electrical Outlets
Timer Settings	OFF, ON, 2hr, 4hr, 6hr, 8hr, Dusk to Dawn Sensor
Application	Indoor / Outdoor
Material	ABS Plastic
Mounting type	Plug-in Wall Mounted
Cord Length (in)	6 Inches
Cord type	14/3 AWG SJTW
Color	Black
Certifications and Listings	ETL, FCC
Warranty	1 Year

DETAILED DIMENSIONS

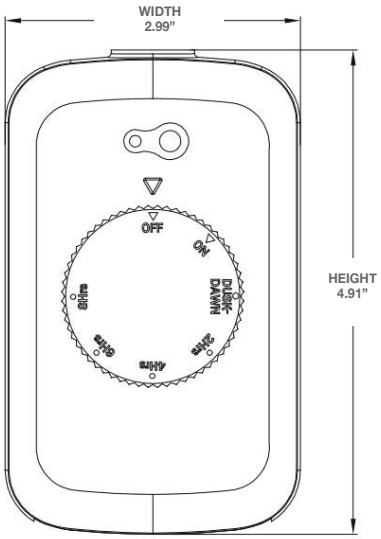

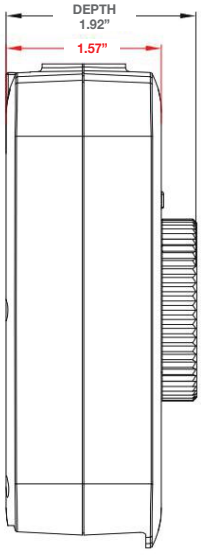



FEATURES

- Automatic dusk-to-dawn sensor
- Customizable timer with 2, 4, 6, or 8-hour countdown options
- Dual outlets & 15A to power multiple devices or heavy-duty lights
- Weather-resistant design ensures reliable year-round outdoor use

MODEL INFORMATION

MODEL	CASE QTY

1-877-255-0004 | info@greenliteusa.com
www.greenliteusa.com

ENERGY STAR PARTNER
WOMEN OWNED
NMSDC

V1-09292025

Energy Conservation - COMPACT REFRIGERATOR

This Energy Star compact fridge is perfect if you're in need of extra fridge space. With its compact size and style, this larder fridge will suit any room in your home and will fit perfectly into your kitchen, utility, playroom, office or even your bedroom.

PRODUCT SPECIFICATIONS

Total Capacity	1.7 cu. ft.
Freezer Capacity	0.2 cu. ft.
Refrigerator Capacity	1.5 cu. ft.
Climate Class	T/ST/N
ENERGY STAR	YES
Noise	42db
Finish	PCM/VCM
Flush Back Design	Yes
Reversible Door	Yes
Adjustable Legs	Yes
Handle	Recessed
Key/Lock	No
Temp. Control	Mechanical
Adjustable Temperature	3 Settings: Cool/Cold/Coldest
Defrosting	Manual
Refrigerant	R600a
Dimensions	17.3” W x 18.9” D x 19.5” H
Weight	34.2 lbs
Warranty	1 Year



FEATURES

- 1.7 cu. ft. of space
- Reversible door
- Adjustable feet
- Flush back design

MODEL INFORMATION

MODEL	CASE QTY
WS-47R	



1-877-255-0004 | info@greenliteusa.com
www.greenliteusa.com

V1-012325

greenlite™

Air Quality and Home Safety - 7W AIR PURIFIER

Compact 7W air purifier with True HEPA H13 3-stage filtration to capture dust, smoke, pollen, and more for small rooms up to 48 sq. ft. Ultra-quiet operation (22–55 dB) with 4 fan speeds, touch controls, timer, and optional aroma chamber.

ENERGY STAR · TÜVRheinland · RoHS · FC · CARB · ENERGY STAR Most Efficient 2025 www.energystar.gov

PRODUCT SPECIFICATIONS

Rating	120VAC, 60Hz
Rating Power	7 Watt
Noise Level	Noise level 22dB@ low Noise level 55dB@ high
Room Size (Sq. Ft.)	48 Sq. Ft.
Dust-Free CADR (cfm)	33
Smoke-Free CADR (cfm)	31
Pollen-Free CADR (cfm)	36
Annual Energy Use (kWh/year)	33
PM2.5-Free Clean Air Delivery Rate (cfm)	32
Integrated Energy Factor (cfm/Watt)	5.4
Filter	True Hepa H13 filter 3 ply: Pre, HEPA & Active Carbon
Touch Screen	Touch button control
Fan Speeds (# settings)	4 speeds: Sleep, Low, Medium, High
Timer	4/8/12hours
Unit Weight	3.53 lbs
Warranty	1 Year
Certifications	Energy Star, cTUVus , FCC, Rohs, CARB

DETAILED DIMENSIONS

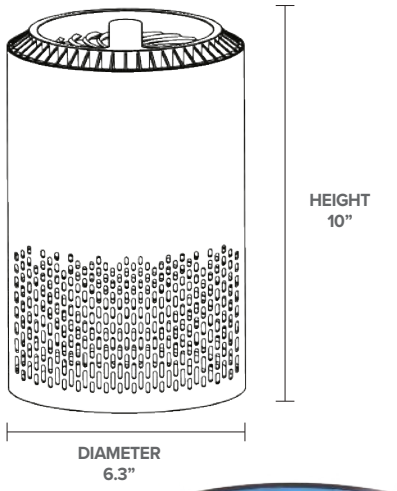

FEATURES

- Powerful 3-Stage Filtration
- Compact & Energy Efficient
- Ultra-Quiet Operation
- 4 fan speeds, touch controls, and 4/8/12-hour timer
- Built-in ambient light & essential oil diffuser



MODEL INFORMATION

MODEL	CASE QTY
G-PURE-7W	6

1-877-255-0004 | info@greenliteusa.com
www.greenliteusa.com

ENERGY STAR PARTNER · WOMEN OWNED · NMSDC

V1 - 20251024

Air Quality and Home Safety - 15W AIR PURIFIER

Greenlite's Air Purifier has an H13 True HEPA (High Efficiency Particulate Air) filter that can remove 99.97% of airborne particles 0.3 microns in size. This Air Purifier is known for its compact size and it's a perfect choice for medium rooms of up to 161 sq. ft. Energy Star most efficient 2025.

PRODUCT SPECIFICATIONS

Rating	100-240VAC, 50/60Hz, 0.5A
Rating Power	15.6W
Noise Level	50dBa
Room Size (Sq. Ft.)	161 Sq. Ft.
Dust-Free CADR (cfm)	106
Smoke-Free CADR (cfm)	104
Pollen-Free CADR (cfm)	117
Annual Energy Use (kWh/year)	92
PM2.5-Free Clean Air Delivery Rate (cfm)	105
Integrated Energy Factor (cfm/Watt)	5.4
Filter	True Hepa H13 filter 3 ply: Pre, HEPA & Active Carbon
Touch Screen	Touch button control
Fan Speeds (# settings)	3 speeds: Low, Medium, High
Timer	2/4/8hours
Unit Weight	4.41 lbs
Warranty	1 Year
Certifications	Energy Star, cETLus , FCC, CARB

DETAILED DIMENSIONS

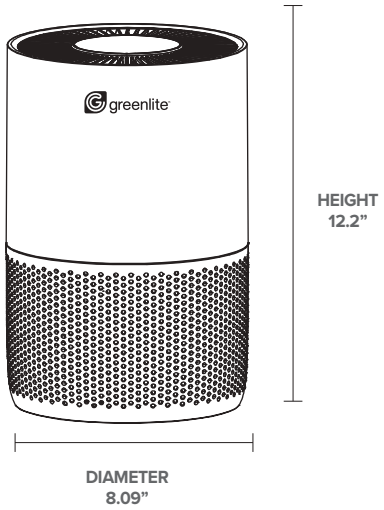

FEATURES

- 3 fan settings: Low, Medium, High / 3 timer settings:
- 2hr, 4hr, 8hr Whisper-quiet operation
- Compact and powerful air purification
- Captures dust, pet dander, pollen, smoke, and odors
- Easy-to-use touchscreen



MODEL INFORMATION

MODEL	CASE QTY
G-PURE-15W	4

1-877-255-0004 | info@greenliteusa.com
www.greenliteusa.com

V1 - 20251024

Air Quality and Home Safety - 22W AIR PURIFIER

Breathe easy with the Greenlite True HEPA Air Purifier. This compact yet powerful unit removes 99.97% of airborne particles, including allergens, dust, pollen, and pet dander, making it ideal for rooms up to 225 sq ft. Experience cleaner, healthier air with whisper-quiet operation and long-term air cleaning performance. Perfect for homes, dorms, and offices.

PRODUCT SPECIFICATIONS

Input	100-240VAC, 50/60Hz, 1.5A
Rating Power	22W
Noise Level	22-55 dBA
Room Size (Sq. Ft.)	225 Sq. Ft.
Modes	Automatic, Sleep, High
Dust-Free CADR (cfm)	147
Smoke-Free CADR (cfm)	145
Pollen-Free CADR (cfm)	157
Annual Energy Use (kWh/year)	124.97
Filter	H13 True HEPA filter
Touch Screen	Yes
Air Quality Sensor	Yes - (4 color LED)
Unit Weight	6.17 lbs.
Warranty	1 Year
Certifications	cETLus, Energy Star, CARB, AHAM

DETAILED DIMENSIONS

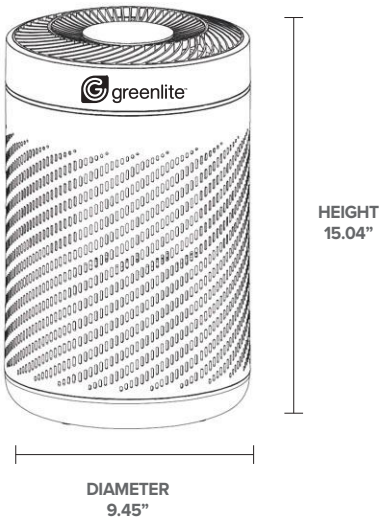





FEATURES

- 3 modes: Automatic, Sleep, High
- Whisper-quiet operation
- Compact and powerful air purification
- Captures dust, pet dander, pollen, smoke, and odors
- Easy-to-use touchscreen



MODEL INFORMATION

MODEL	CASE QTY
G-PURE-22W	2

1-877-255-0004 | info@greenliteusa.com
www.greenliteusa.com

V1 - 20250127

Air Quality and Home Safety - 22 PINT DEHUMIDIFIER

Greenlite's 22-Pint Dehumidifier improves indoor comfort, protects against mold and moisture damage, and supports utility program goals for healthier, more efficient homes. With simple digital controls, easy bucket access, and a continuous drain option, it delivers dependable humidity control in high-moisture areas and is effortless for customers to operate and maintain.

PRODUCT SPECIFICATIONS

Product Type	Portable Dehumidifier
Power Supply	115V_1Ph; 2.2 A
Input Wattage	250W
Dehumidifier Water Removal Capacity	22 pints/day
Integrated Energy Factor	1.7/L/kWh
Annual Energy Consumption	276 (kWh/year)
Refrigerant Type	HFC-32 (R32)
Refrigerant Charge (ounces)	3.53 oz
Coverage Area	Up to 1,500 sq. ft.
Maximum Noise Level	50 dB(A)
Bucket Size (Liters)	3.2L

DETAILED DIMENSIONS

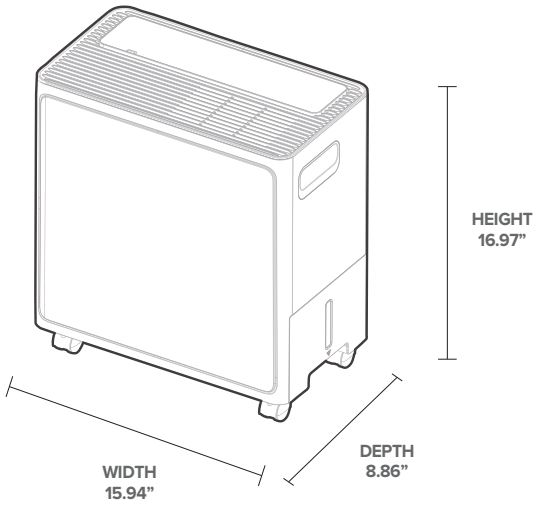



FEATURES

- Removes up to 22 pints of moisture daily
- Continuous drain option for hassle-free operation
- Easy digital controls with adjustable humidistat
- Energy Star certified for efficient performance

1-877-255-0004 | info@greenliteusa.com
www.greenliteusa.com

V1 - 20251204

Air Quality and Home Safety - 22 PINT DEHUMIDIFIER

Color	White
Fan Speed	2 (Low -> High)
Operation Modes	**4 Modes**: Dehumidifier, Comfort, Dryer, Continuous
Humidity Set Control	35% to 85%
Filter Type	Removable
Clean Filter Indicator Light	Yes
Bucket Fill Indicator	Yes
Automatic Shutoff	Yes
Automatic Defrost Control	Yes
TIMER Set Control	Yes
Manufacturer Warranty	1 Year
Certifications	Energy Star, UL
Unit Weight	30.86 lbs



MODEL INFORMATION

MODEL	CASE QTY
GL-DEH22R32	1

www.greenliteusa.com

Air Quality and Home Safety - 32 PINT DEHUMIDIFIER

Greenlite's 32-Pint Portable Dehumidifier delivers powerful moisture control for homes up to 753 sq. ft., helping reduce mold, humidity, and energy waste in basements and living spaces. Designed for easy user operation with Energy Star efficiency, it supports utility program goals by improving comfort and lowering energy costs in humid climates.

PRODUCT SPECIFICATIONS

Product Type	Portable Dehumidifier
Power Supply	120V_1Ph; 5.08A
Input Wattage	300W
Dehumidifier Water Removal Capacity	32 pints/day
Integrated Energy Factor	2.13/L/kWh
Annual Energy Consumption	334 (kWh/year)
Refrigerant Type	HFC-32 (R32)
Refrigerant Charge (ounces)	5 oz
Coverage Area	Up to 753 sq. ft.
Maximum Noise Level	53 dB(A)
Bucket Size (Liters)	5.5L

DETAILED DIMENSIONS

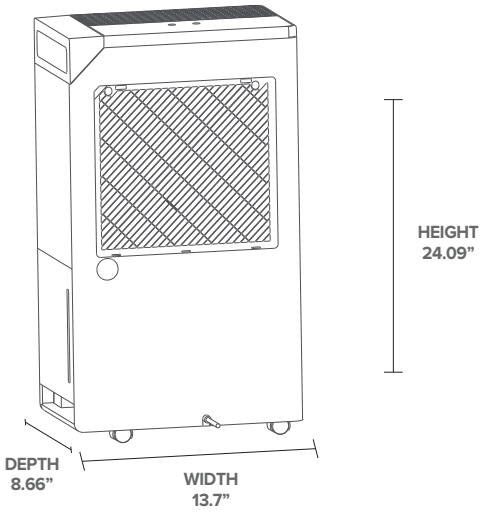



FEATURES

- Energy Star efficiency lowers home humidity costs
- Up to 753 sq. ft. moisture control
- Auto shutoff and bucket fill indicator
- Washable filter for long-lasting performance
- Quiet operation with three adjustable modes

1-877-255-0004 | info@greenliteusa.com
www.greenliteusa.com

V1 - 20251204

Air Quality and Home Safety - 32 PINT DEHUMIDIFIER

Color	White
Fan Speed	3 (Low -> Medium -> High)
Operation Modes	**3 Modes**: Dehumidifier, Comfort, Continuous
Humidity Set Control	Yes
Filter Type	Removable; Washable
Bucket Fill Indicator	Yes
Automatic Shutoff	Yes
Child Lock	Yes
TIMER Set Control	Yes
Manufacturer Warranty	1 Year
Certifications	Energy Star, ETL
Unit Weight	38.15 lbs





MODEL INFORMATION

MODEL	CASE QTY
GL-DEH32R32	1

www.greenliteusa.com

ENERGY STAR PARTNER

WOMEN OWNED

NMSDC

Air Quality and Home Safety - 50 PINT DEHUMIDIFIER

The Greenlite 50 Pint Dehumidifier provides high-capacity moisture removal designed for residential basements, living areas, and utility program installations. With multiple operating modes, digital controls, and efficient performance, it delivers reliable humidity control and improved indoor comfort.

Intertek 5012665

PRODUCT SPECIFICATIONS

Product Type	Portable Dehumidifier
Voltage / Frequency	120V / 60Hz
Rated Power	505 W
Dehumidifier Water Removal Capacity (pints/day)	50 pints/day
Integrated Energy Factor	2.01 L/kWh
Annual Energy Consumption (kWh/year)	525 (kWh/year)
Refrigerant Type	R32
Refrigerant Charge (ounces)	5.6 oz
Coverage Area	753 – 1,292 sq. ft.
Water Tank Capacity	1.64 gallons (6.2 L)
Operating Modes	5 modes (Custom, Comfort, Sleep, Turbo,Continuous)
Color	White
Humidity Control Range	35% – 80% RH
Recommended Comfort Range	45% – 55% RH
Operating Temperature Range	~41°F – 95°F (5°C – 35°C)
Fan Speeds	Low / Medium / High

DETAILED DIMENSIONS

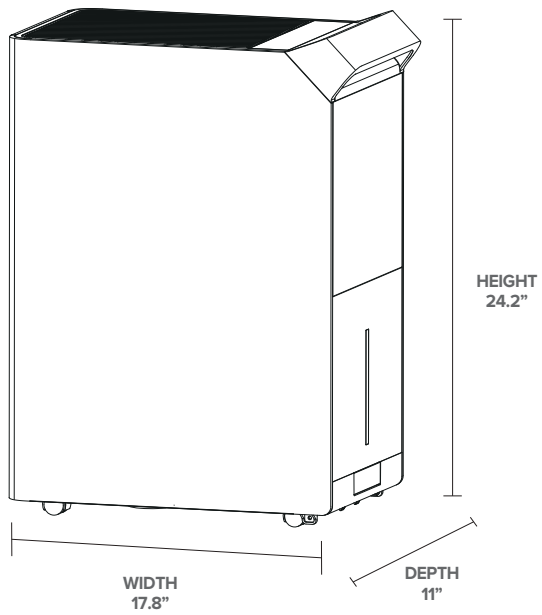



FEATURES

- High-capacity moisture control up to 1,292 sq. ft.
- Energy Star certified for efficient performance
- 3 fan speeds (Low / Medium / High)
- 24-hour programmable timer
- Automatically restarts after a power outage using previous settings
- LED Digital Display

1-877-255-0004 | info@greenliteusa.com
www.greenliteusa.com

ENERGY STAR PARTNER
WOMEN OWNED
NMSDC

V1 - 20260309

Air Quality and Home Safety - 50 PINT DEHUMIDIFIER

Timer Range	0-24 hours
Unit Weight	43.4 lb
Child Lock	Yes
Continuous Drain Option	Includes drain hose
Warranty	1 year
Certifications	ETL, FCC, CA65, Energy Star
Case QTY	1 unit/case
Unit Dimensions	17.8” x 11” x 24.2”





MODEL INFORMATION

MODEL	CASE QTY
GL-DEH50R32	1

www.greenliteusa.com

ENERGY STAR PARTNER

WOMEN OWNED

NMSDC

greenlite™

Air Quality and Home Safety - DEHUMIDIFIER

Fight dampness and protect your home with the Greenlite ENERGY STAR Dehumidifier. This powerful unit offers efficient moisture removal with a unique lift-and-twist design for flexible operation and 3x the water tank capacity. Control it from anywhere with your smartphone or voice assistant using the App. Plus, get notified when it's time to empty the bucket!

ENERGY STAR · UL · WiFi · GREENLITE SMART APP · VOICE ENABLED

PRODUCT SPECIFICATIONS

Power Supply	115V,1Ph,60Hz
Input Wattage	230W
Plug Type	Parallel/NEMA 5-15
Power Cord Type	16AWGx3
Dehumidification	20.16 pint/day
Bucket Size (Liters)	12L
Removable Bucket	Yes
Airflow Roomside (hi / low)	150.00 / 126.47 CFM
Noise level	42 - 48 dB(A)
Refrigerant	R32
EEV	1.7 L/kWh
Fan Speeds	Low, Med, High
Filter Type	Air Fresh Filter
Clean Filter Indicator Light	Yes
Remote Control	Yes
Control Type	Electronic
Wi-Fi Ready	Yes
App Compatibility	Amazon Alexa, Google Assistant
Voice Control	Yes
Operating Temperature	41-96F
Adjustable Humidistat	Yes, 35%-85%
Color	White
Net Weight	15 lbs
Bucket Fill Indicator	Yes
Automatic Shutoff	Yes
Automatic Defrost Control	Yes
Certifications	Energy Star, UL

DETAILED DIMENSIONS

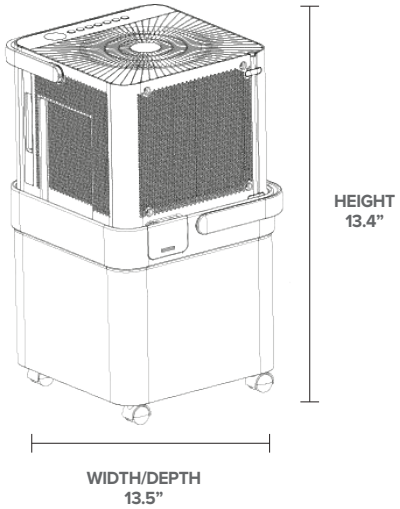



FEATURES

- Real-time humidity and water levels
- Efficient moisture removal
- Lift-and-twist design
- Smart home connectivity
- Remote drain option



1-877-255-0004 | info@greenliteusa.com
www.greenliteusa.com

ENERGY STAR PARTNER · WOMEN OWNED · NMSDC

V1 - 20250120

greenlite™

Air Quality and Home Safety - PIR OCCUPANCY SENSOR

Save energy and enhance convenience with the MPW-V Occupancy Sensor. This intelligent sensor automatically turns lights on and off based on occupancy and ambient light levels, ensuring efficient energy use and hands-free operation. Customize settings to keep lights on while motion is detected and adjust the time delay for optimal performance.

c UL us LISTED

PRODUCT SPECIFICATIONS

Motion Type	PASSIVE INFRARED (PIR)
Field of View	150°
Coverage	1000 Sq. ft.
Color	White
Mounting Type	Wall
Input Voltage	120VAC
Operating Temperature	32°F to 131°F (0°C to 55°C)
Adjustable Light Level	10FC-150FC
Adjustable Time Delay	15 sec. - 30min
Sensitivity Adjustment	25% or 100%
Fluorescent	800VA @ 120VAC,60Hz
Motor	1/4HP, 120VAC, 60Hz
Warranty	2 Years
Standard	UL/CUL Listed





FEATURES

- Auto on/off for convenience and savings
- Ambient light sensor
- Adjustable time delay
- Reliable occupancy detection



1-877-255-0004 | info@greenliteusa.com
www.greenliteusa.com

ENERGY STAR PARTNER WOMEN OWNED NMSDC

V1 - 20250127

Air Quality and Home Safety - FILTER REPLACEMENT - 7W AIR PURIFIER

Breathe easier with the Greenlite HEPA-Type Replacement Filter. This filter features multiple layers, including a pre-filter, HEPA-Type filter, and activated carbon filter, to capture 99.97% of airborne particles, including dust, pollen, pet dander, smoke, and odors. Designed for the 7W Air Purifier, it ensures cleaner and healthier air in your home or office. Easy installation and long-lasting performance make it a breeze to maintain optimal air quality.

PRODUCT SPECIFICATIONS

Filter Type	HEPA-Type
Average Filter LIfe	6 months

DETAILED DIMENSIONS

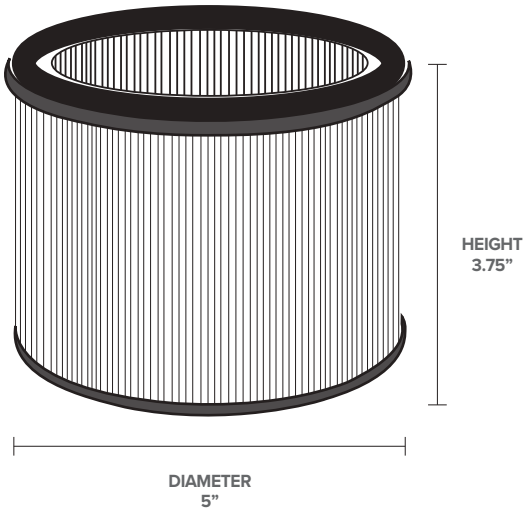



FEATURES

- HEPA-Type Filter
- Easy installation
- 360° Filtration
- Captures 99.97% of airborne particles as small as 0.3 microns



MODEL INFORMATION

MODEL	CASE QTY
G-PURE-7W FILTER	12

1-877-255-0004 | info@greenliteusa.com
www.greenliteusa.com

V1 - 20260401

Air Quality and Home Safety - FILTER REPLACEMENT - 15W AIR PURIFIER

Breathe easier with the Greenlite HEPA-Type Replacement Filter. This filter features multiple layers, including a pre-filter, HEPA-Type filter, and activated carbon filter, to capture 99.97% of airborne particles, including dust, pollen, pet dander, smoke, and odors. Designed for the 15W Air Purifier, it ensures cleaner and healthier air in your home or office. Easy installation and long-lasting performance make it a breeze to maintain optimal air quality.

PRODUCT SPECIFICATIONS

Filter Type	HEPA-Type
Average Filter LIfe	6 months

DETAILED DIMENSIONS

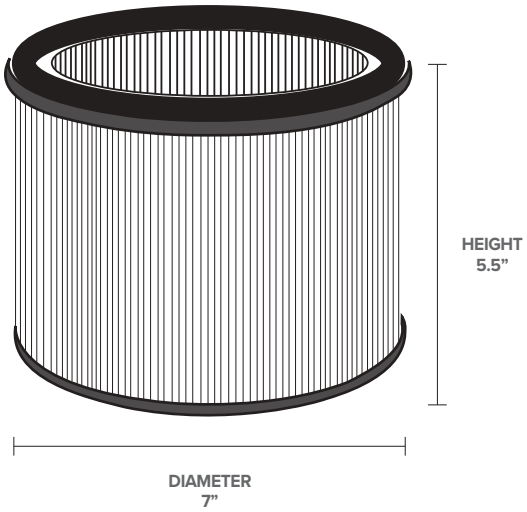



FEATURES

- HEPA-Type Filter
- Easy installation
- 360° Filtration
- Captures 99.97% of airborne particles as small as 0.3 microns

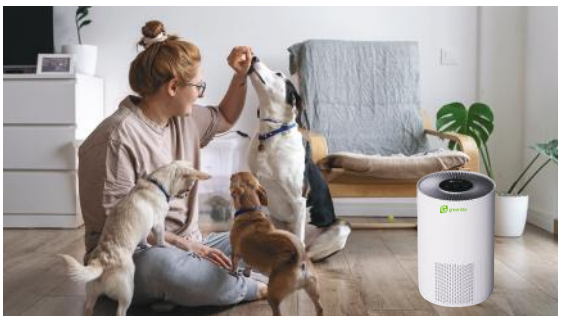

MODEL INFORMATION

MODEL	CASE QTY
G-PURE-15W FILTER	8

1-877-255-0004 | info@greenliteusa.com

www.greenliteusa.com

V1 - 20260401

Air Quality and Home Safety - FILTER REPLACEMENT - 22W AIR PURIFIER

Breathe easier with the Greenlite HEPA-Type Replacement Filter. This filter features multiple layers, including a pre-filter, HEPA-Type filter, and activated carbon filter, to capture 99.97% of airborne particles, including dust, pollen, pet dander, smoke, and odors. Designed for the 22W Air Purifier, it ensures cleaner and healthier air in your home or office. Easy installation and long-lasting performance make it a breeze to maintain optimal air quality.

PRODUCT SPECIFICATIONS

Filter Type	HEPA-Type
Average Filter LIfe	6 months

DETAILED DIMENSIONS

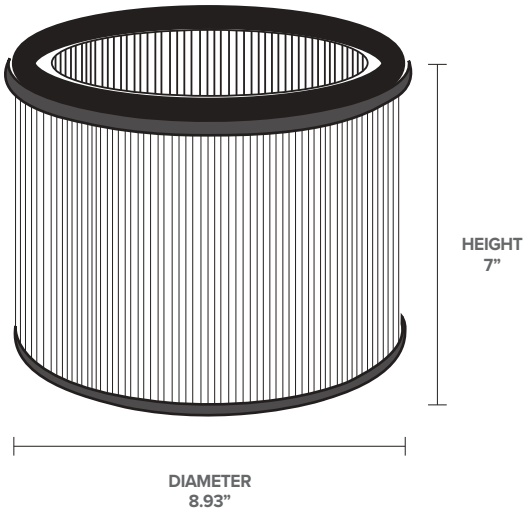



FEATURES

- HEPA-Type Filter
- Easy installation
- 360° Filtration
- Captures 99.97% of airborne particles as small as 0.3 microns



MODEL INFORMATION

MODEL	CASE QTY
G-PURE-22W FILTER	8

1-877-255-0004 | info@greenliteusa.com

www.greenliteusa.com

V2 - 20260408

greenlite™

Air Quality and Home Safety - FILTER REPLACEMENT - 25W AIR PURIFIER

Breathe easier with the Greenlite HEPA-Type Replacement Filter. This filter features multiple layers, including a pre-filter, HEPA-Type filter, and activated carbon filter, to capture 99.97% of airborne particles, including dust, pollen, pet dander, smoke, and odors. Designed for the 25W Air Purifier, it ensures cleaner and healthier air in your home or office. Easy installation and long-lasting performance make it a breeze to maintain optimal air quality.

PRODUCT SPECIFICATIONS

Filter Type	HEPA-Type
Average Filter LIfe	6 months

DETAILED DIMENSIONS

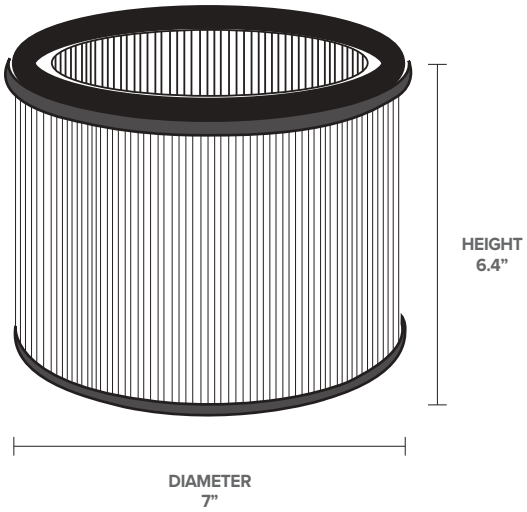



FEATURES

- HEPA-Type Filter
- Easy installation
- 360° Filtration
- Captures 99.97% of airborne particles as small as 0.3 microns



MODEL INFORMATION

MODEL	CASE QTY
G-PURE-25W FILTER	8

1-877-255-0004 | info@greenliteusa.com

www.greenliteusa.com

ENERGY STAR PARTNER · WOMEN OWNED · NMSDC

V1 - 20250127

Air Quality and Home Safety - BUILT-IN BATTERY SMOKE DETECTOR

This smoke alarm offers hassle-free safety with a built-in 3V lithium battery that lasts 10 years, eliminating the need for battery replacements. It boasts a loud 85dB alarm, reliable smoke detection with a sensitivity of 1.59-2.80%/ft, and a convenient 8-minute silence function.

ULC LISTED

UL CERTIFIED S25382

Helps Reduce Cooking Nuisance Alarms UL 217 9th Ed.

ETL 7275-2313:0500

PRODUCT SPECIFICATIONS

Product Type	Smoke detector
Power Source	3V built-in lithium battery
Sensor	Photoelectric
Alarm Volume	≥85dB@10ft
Alarm Sensitivity	1.59-2.80%/ft.
Silence Period	Approx. 8 minutes
Battery Lifetime	10 years
Temperature Range	40˚F (4.4˚C) to 100˚F (37.8˚C)
Humidity Range	10%-95% relative humidity, non-condensing
Mounting Type	Wall or ceiling
Unit Weight	155g (including battery)
Warranty	3 years product limited
Standard	ETL, compliant with UL 217 9th Edition

DETAILED DIMENSIONS



DIAMETER
3.9”

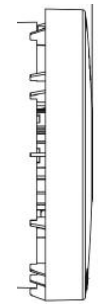

WIDTH
1.4”



FEATURES

- Built-in lithium battery that eliminates the need for battery replacements for a decade
- 85dB alarm ensures you'll hear the alert even from a distance
- Dependable and reliable smoke detection and peace of mind



MODEL INFORMATION

MODEL	CASE QTY

1-877-255-0004 | info@greenliteusa.com

www.greenliteusa.com

ENERGY STAR PARTNER

WOMEN OWNED

NMSDC

V1 - 20250120

greenlite™

Air Quality and Home Safety - SMOKE DETECTOR

Reliable 9V Battery-Operated Smoke Detector - Meets Industry Standards. Ensure code compliance and dependable fire safety with this photoelectric smoke detector. Powered by a 9V battery, it provides early warning of smoke and fire, crucial for protecting lives and property.

C ETL LISTED US
Intertek

PRODUCT SPECIFICATIONS

Power Source	9V battery
Sensor	Photoelectric
Alarm Volume	≥ 85dB(A) @ 10 feet
Indicator Light	Red LED
Alarm Mode	Sound and light signal
Temperature Range	4.4˚C (40˚F) to 37.8˚C (100˚F)
Humidity Range	10-95% Relative humidity, non-condensing
Mounting Type	Ceiling or wall
Unit Weight	137g (including battery)
Warranty	3-year limited
Standard	UL STD 217 9th ED

DETAILED DIMENSIONS

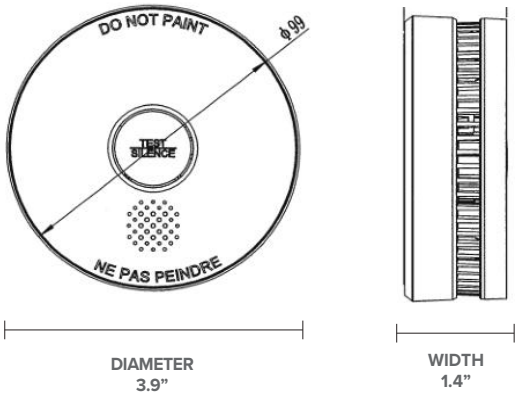



FEATURES

- Reliable early detection with advanced photoelectric technology
- Simple, wire-free installation and low-battery indicator
- Includes a built-in test button for regular functionality checks



MODEL INFORMATION

MODEL	CASE QTY

1-877-255-0004 | info@greenliteusa.com
www.greenliteusa.com

ENERGY STAR PARTNER
WOMEN OWNED
NMSDC

V1 - 20250120

Air Quality and Home Safety - COMBINATION SMOKE AND CO DETECTOR

This combination smoke and CO detector offers reliable and low-maintenance safety. Dual sensors provide comprehensive protection with a loud 85dB alarm, while the 10-year lifespan and easy installation minimize upkeep. ETL listed and UL compliant for quality assurance, this detector offers long-term value and peace of mind.

PRODUCT SPECIFICATIONS

Product Type	Combination Smoke and CO detector
Power Source	2 x AA batteries
Sensor	Photoelectric & Electrochemical
Alarm Volume	≥85dB@10ft
Battery Lifetime	>1 Year
Product Lifetime	10 Years
Alarm Mode	Sound and red LED signal
Temperature Range	40˚F (4.4˚C) to 100˚F (37.8˚C)
Humidity Range	10%-95% relative humidity, non-condensing
Mounting Type	Wall mount or ceiling mount
Unit Weight	305g (including battery)
Warranty	3 Year product limited
Standard	ETL, CONFORMS TO UL STD 217 AND UL STD 2034

DETAILED DIMENSIONS

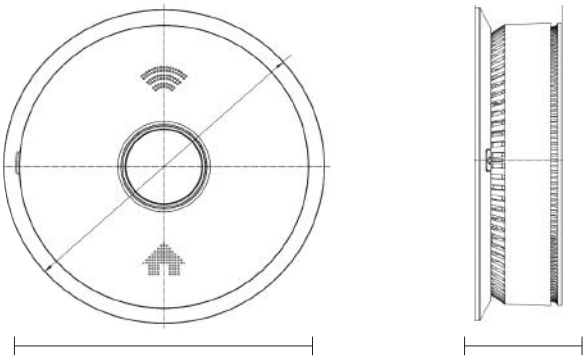

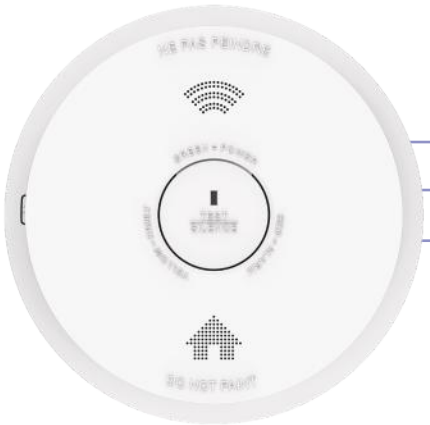

FEATURES

- Dual sensors for smoke & CO detection
- 10-year product life for long-term value and minimal replacement costs
- Easy installation and over 1-year battery life



MODEL INFORMATION

MODEL	CASE QTY

1-877-255-0004 | info@greenliteusa.com
www.greenliteusa.com

V1 - 20250120

Smart Home - SMART 4.5W CANDELABRA

Control your lighting from anywhere with this WiFi-enabled LED bulb. Use Amazon Alexa or Google Assistant to control these Smart bulbs within the home, and their WiFi capabilities also permit entirely remote operation from anywhere in the world.

PRODUCT SPECIFICATIONS

Wattage	4.5W
Incandescent Equivalent	30W
Voltage	120V
Lumens	350
Bulb Shape	B11
CCT	Tunable white 2700K-6500K
CRI	80
Base	E12
Material	Plastic
UL Location Rating	Damp
UL Fixture Rating	Enclosed
Rate Life Hours	25000
Dimmable	Yes (app only)
Standard	ETL
Warranty	3 Years

DETAILED DIMENSIONS

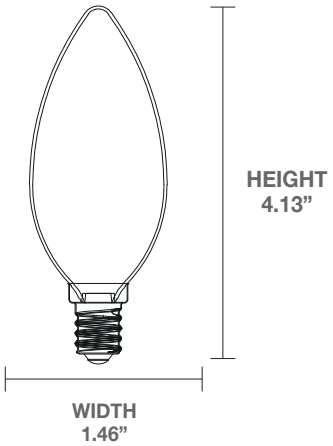

FEATURES

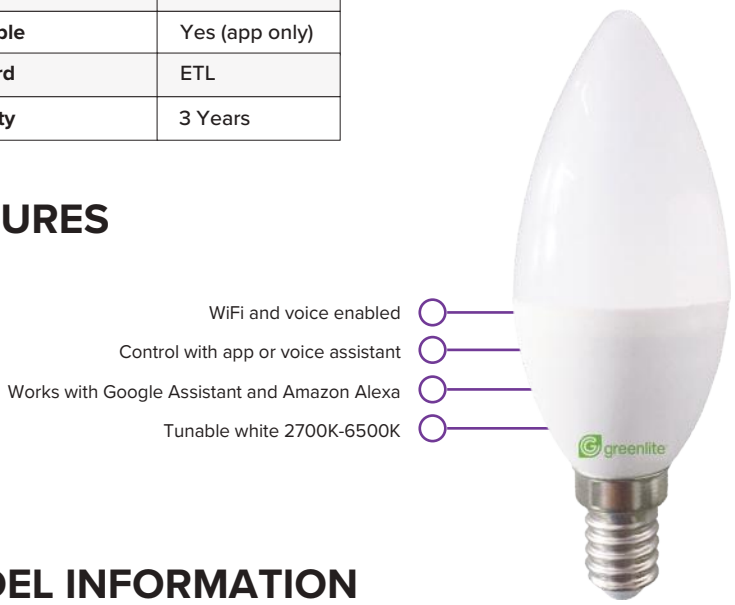



MODEL INFORMATION

MODEL NUMBER	CASE QTY
4.5/CTC/SMART1	24

1-877-255-0004 | info@greenliteusa.com
www.greenliteusa.com

V1 - 012725

Smart Home - SMART 9W A19 OMNI

Control your lighting from anywhere with this WiFi-enabled LED bulb. Use Amazon Alexa or Google Assistant to control these Smart bulbs within the home, and their WiFi capabilities also permit entirely remote operation from anywhere in the world.

PRODUCT SPECIFICATIONS

Wattage	9W
Incandescent Equivalent	60W
Voltage	120V
Lumens	800
Bulb Shape	A19
CCT	2700K
CRI	80
Base	E26
Material	Plastic
UL Location Rating	Damp
Rate Life Hours	25000
Dimmable	Yes (app only)
Standard	ETL
Warranty	3 Years

DETAILED DIMENSIONS

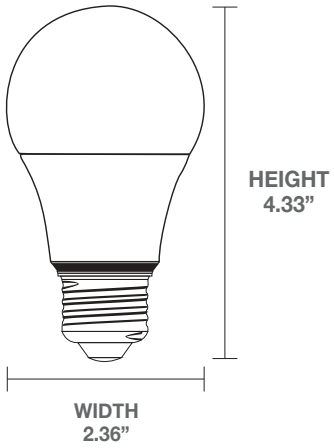

FEATURES

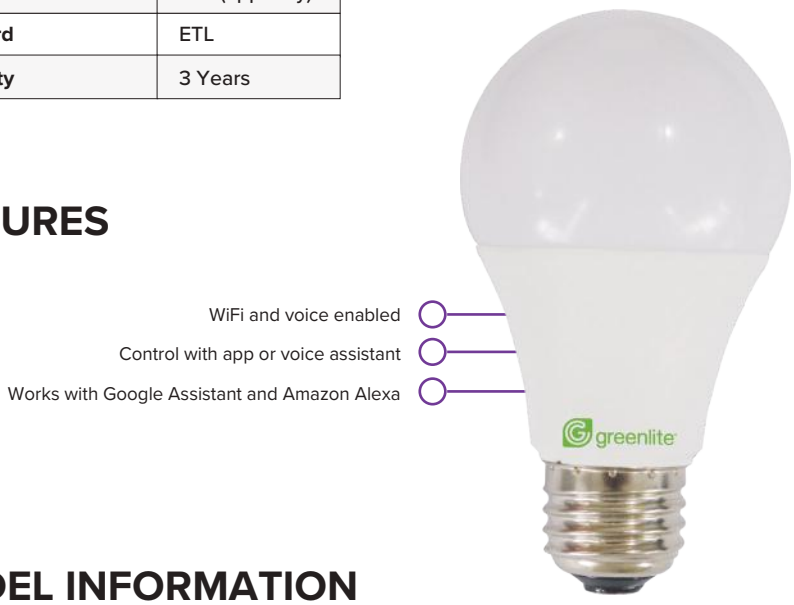



MODEL INFORMATION

MODEL NUMBER	CASE QTY
9W/OMNI/SMART1	24

1-877-255-0004 | info@greenliteusa.com
www.greenliteusa.com

Smart Home - SMART 8W BR30

Control your lighting from anywhere with this WiFi-enabled LED bulb. Use Amazon Alexa or Google Assistant to control these Smart bulbs within the home, and their WiFi capabilities also permit entirely remote operation from anywhere in the world.

PRODUCT SPECIFICATIONS

Wattage	8W
Incandescent Equivalent	65W
Voltage	120V
Lumens	670
Bulb Shape	BR30
CCT	2700K
CRI	80
Base	E26
Material	Plastic
UL Location Rating	Damp
Rate Life Hours	25000
Dimmable	Yes (app only)
Standard	ETL
Warranty	3 Years

DETAILED DIMENSIONS

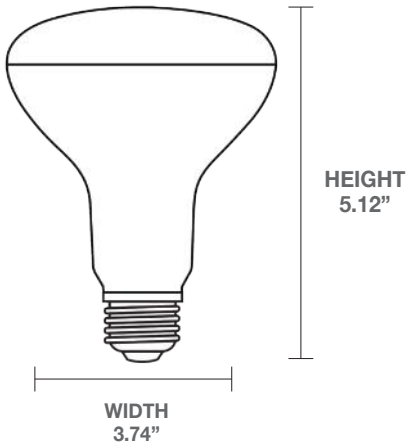

FEATURES

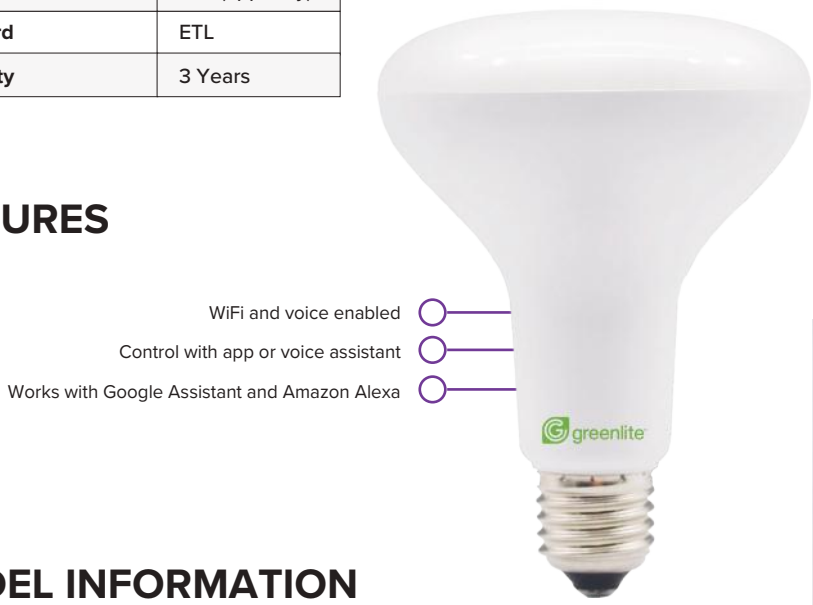



MODEL INFORMATION

MODEL NUMBER	CASE QTY
8W/BR30/SMART1	24

1-877-255-0004 | info@greenliteusa.com
www.greenliteusa.com

Smart Home - SMART 11W A21 OMNI

Control your lighting from anywhere with this WiFi-enabled LED bulb. Use Amazon Alexa or Google Assistant to control these Smart bulbs within the home, and their WiFi capabilities also permit entirely remote operation from anywhere in the world.

PRODUCT SPECIFICATIONS

Wattage	11W
Incandescent Equivalent	75W
Voltage	120V
Lumens	1100
Bulb Shape	A21
CCT	2700K
CRI	80
Base	E26
Material	Plastic
UL Location Rating	Damp
Rate Life Hours	25000
Dimmable	Yes (app only)
Standard	ETL
Warranty	3 Years

DETAILED DIMENSIONS

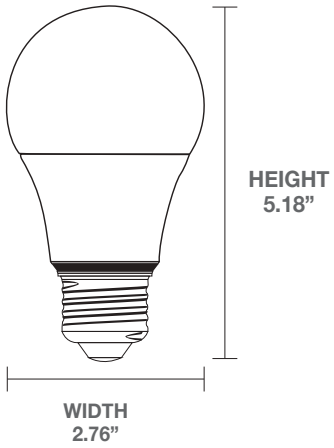

FEATURES

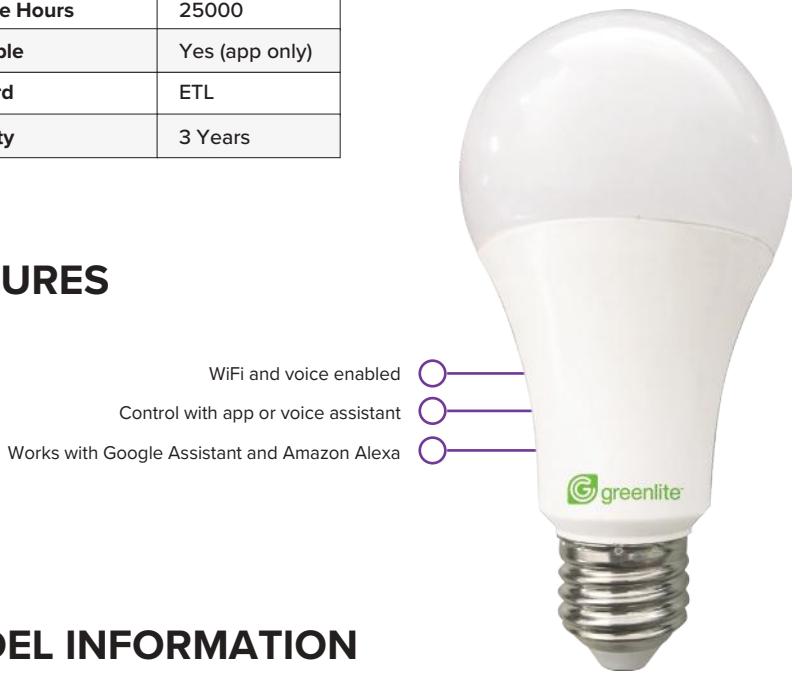



MODEL INFORMATION

MODEL NUMBER	CASE QTY
11W/OMNI/SMART1	24

1-877-255-0004 | info@greenliteusa.com
www.greenliteusa.com

Smart Home - WI-FI SMART PLUG WITH DUAL USB PORTS

The Greenlite™ Indoor Wi-Fi Smart Plug with USB Ports delivers powerful 15A outlet control plus integrated USB charging. With built-in 2.4GHz Wi-Fi connectivity, it enables remote access, scheduling, and voice activation — all in one compact, energy-conscious design.

GREENLITE APP

PRODUCT SPECIFICATIONS

Input & Output Voltage	120 VAC
Environment	Indoor
Maximum Load	15A
Maximum Power	1800W
Minimum Requirement	Android 5.0+, iOS 10+
USB Output	2 USB Ports - 5V 2.4A
Wi-Fi Requirement	2.4GHz, 1T1R
Protocol	IEEE 802.11b/g/n
Certifications	FCC, ETL/cETL
Material	Plastic
Limited Warranty	2 Years

DETAILED DIMENSIONS

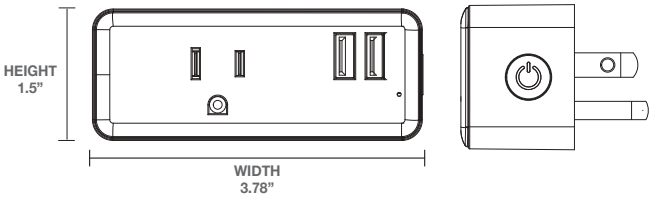

ESTIMATED ENERGY SAVINGS (USAGE DEPENDENT)*

Smart plugs help reduce energy use by automatically turning devices off when not needed and reducing standby (phantom) power consumption. Actual savings depend on connected devices and usage patterns. Automating a 100 W device for 4 fewer hours per day can save up to ~146 kWh per year, depending on usage.

Energy consumption estimate:
Energy (kWh) = Power (W) × Hours of Use ÷ 1000
For illustrative purposes only.

Example:
100 W device used 10 hours/day = 1.0 kWh/day
If automated off for 4 hours/day → 0.6 kWh/day

Smart plug automation can reduce energy use through:
- Scheduled on/off operation
- Remote shutoff of devices left on
- Reduction of standby (phantom) loads

Typical standby loads: Televisions (1–5 W) • Cable boxes (10–20 W) Printers (3–10 W) • Gaming consoles (5–15 W)

*Estimated energy savings are based on typical usage scenarios and assumptions. Actual savings will vary depending on connected devices, usage patterns, and operating conditions.

FEATURES



- Remote access
- No hub required
- Scheduling & timer
- Voice Control

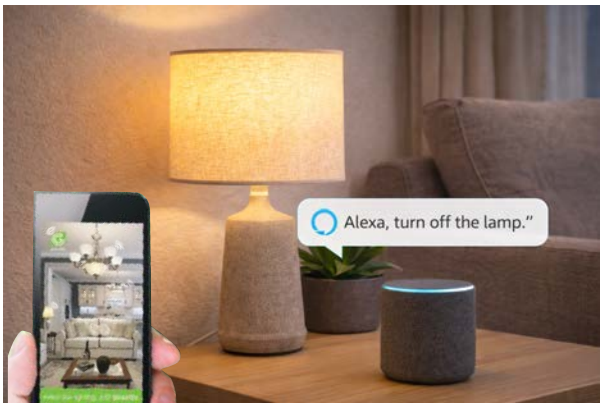

MODEL INFORMATION

MODEL	CASE QTY
TBD	TBD

1-877-255-0004 | info@greenliteusa.com
www.greenliteusa.com

V3-033126

greenlite™

Smart Home - INDOOR WI-FI SMART PLUG

The Greenlite™ Indoor Wi-Fi Smart Plug provides convenient remote control and scheduling to help reduce unnecessary energy use. With built-in 2.4GHz Wi-Fi connectivity, it offers performance, efficiency, and everyday convenience in one compact design.

plug & play · Intertek · FC · Wi Fi · GREENLITE APP · works with the Google Assistant · works with amazon alexa

PRODUCT SPECIFICATIONS

Input & Output Voltage	120 VAC
Environment	Indoor
Maximum Load	10A
Maximum Power	1200W
Minimum Requirement	Android 5.0+, iOS 10+
Wi-Fi Requirement	2.4GHz, 1T1R
Protocol	IEEE 802.11b/g/n
Certifications	FCC, ETL/cETL
Material	Plastic
Limited Warranty	2 Years

DETAILED DIMENSIONS

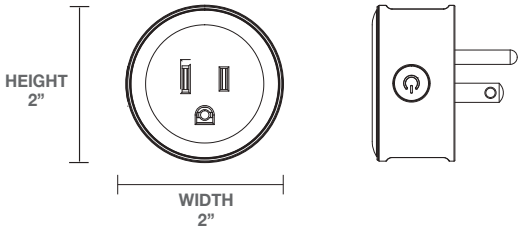



FEATURES

- Remote access
- No hub required
- Scheduling & timer
- Voice Control

ESTIMATED ENERGY SAVINGS (USAGE DEPENDENT)*

Smart plugs help reduce energy use by automatically turning devices off when not needed and reducing standby (phantom) power consumption. Actual savings depend on connected devices and usage patterns. Automating a 100 W device for 4 fewer hours per day can save up to ~146 kWh per year, depending on usage.

Energy consumption estimate:
Energy (kWh) = Power (W) × Hours of Use ÷ 1000
For illustrative purposes only.

Example:
100 W device used 10 hours/day = 1.0 kWh/day
If automated off for 4 hours/day → 0.6 kWh/day

Smart plug automation can reduce energy use through:
• Scheduled on/off operation
• Remote shutoff of devices left on
• Reduction of standby (phantom) loads

Typical standby loads: Televisions (1–5 W) • Cable boxes (10–20 W) Printers (3–10 W) • Gaming consoles (5–15 W)

*Estimated energy savings are based on typical usage scenarios and assumptions. Actual savings will vary depending on connected devices, usage patterns, and operating conditions.

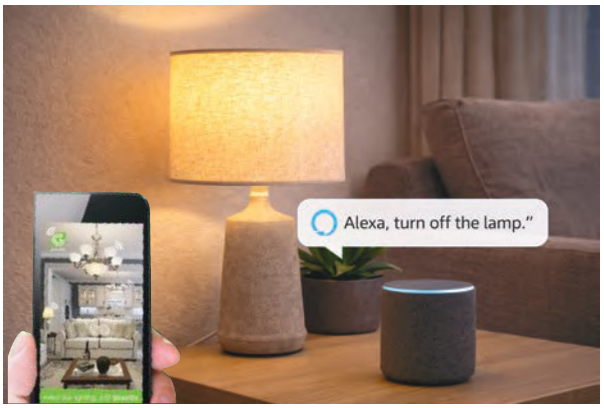

MODEL INFORMATION

MODEL	CASE QTY
TBD	TBD

ENERGY STAR PARTNER · WOMEN OWNED · NMSDC

1-877-255-0004 | info@greenliteusa.com
www.greenliteusa.com

V3-033126

greenlite™

Smart Home - HOME ENERGY MONITOR

Take control of energy consumption with the Greenlite Home Energy Monitor. This powerful and versatile device provides real-time insights into electricity usage, helping identify energy hogs and reduce costs.

PRODUCT SPECIFICATIONS

Rated Voltage	125V
Max Load	1875W
Amperage	15A
Ambient Temperature	0-40°C
Power Detection Range	4W ~ 1875W
Display	Large LCD with blue backlight
Data Memory	Up to 90 days
Battery Backup	Built-in rechargeable battery
Parameters Displayed	Time, costs, consumptions, output, voltage, current, frequency, power factor
Certifications	ETL, FCC
Warranty	1 Year

DETAILED DIMENSIONS

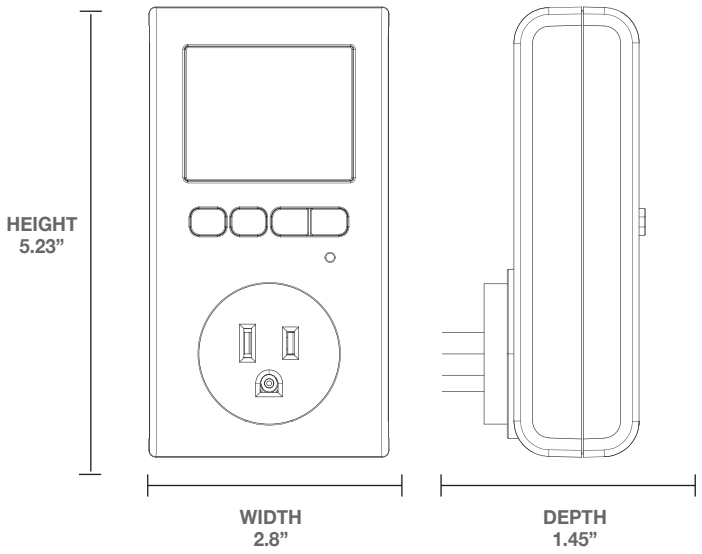

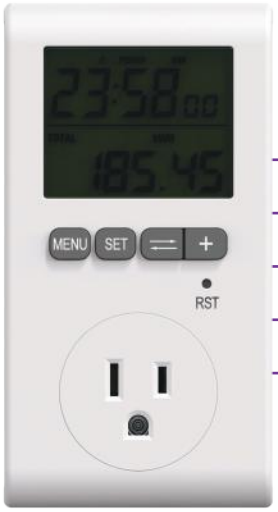

FEATURES

- Cost Calculation: Automatic, with two programmable tariff rates
- Easy-to-read LCD display
- Data backup (battery)
- 90-day memory
- User-friendly interface



MODEL INFORMATION

MODEL	CASE QTY

1-877-255-0004 | info@greenliteusa.com
www.greenliteusa.com

V1-121224

Smart Home - WI-FI SMART PLUG

Empower your customers to manage energy consumption and reduce costs with the Greenlite 15A Smart Wi-Fi Plug. This versatile device allows for remote control, scheduling, and timer functions, promoting both customer satisfaction and responsible energy use.

GREENLITE APP

PRODUCT SPECIFICATIONS

Rated Voltage	120 VAC
AC Frequency	60Hz
Rated Current	15A
Load Power	1800W
Minimum Requirement	Android 4.1 iOS 9.0
Wi-Fi Requirement	2.4GHz
Standard	CSA STD.E60730-1
Certifications	FCC, ETL/cETL
Warranty	1 year

DETAILED DIMENSIONS

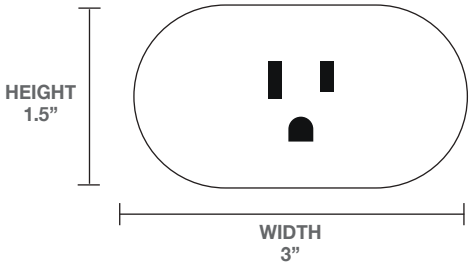



FEATURES

- Remote access
- No hub required
- Scheduling & timer
- 15A 2.4GHZ Wi-Fi



MODEL INFORMATION

MODEL	CASE QTY
PLUG1/WIFI/15A	24

1-877-255-0004 | info@greenliteusa.com
www.greenliteusa.com

V1-121224

greenlite™

Smart Home - WI-FI ADVANCED POWERSTRIP

Take control of your home's power with Greenlite's Surge 6-outlet Smart Wi-Fi Power Strip. Turn electronics on/off from anywhere using your phone or voice assistants, and schedule devices to save energy. One "Always on" outlet and 5 outlets that can be controlled with the Greenlite App. The added surge protection keeps your electronics safe and organized. Simply plug in and connect to Wi-Fi for a smarter, more convenient home.

Intertek

GREENLITE APP



FEATURES

- 1 x "Always On" outlet
- 5 x Independently controlled outlets
- Safeguards your valuable electronics from power surges
- Set schedules to automatically turn devices on/off
- Voice control with Amazon Alexa or Google Assistant
- Control devices using the Smart App



1-877-255-0004 | info@greenliteusa.com
www.greenliteusa.com

ENERGY STAR PARTNER

WOMEN OWNED

NMSDC

Perfect for busy households

Manage multiple devices with ease, from lamps and fans to electronics and holiday decorations. Schedule your lights and appliances to turn off automatically when not in use, reducing wasted energy.

DETAILED DIMENSIONS

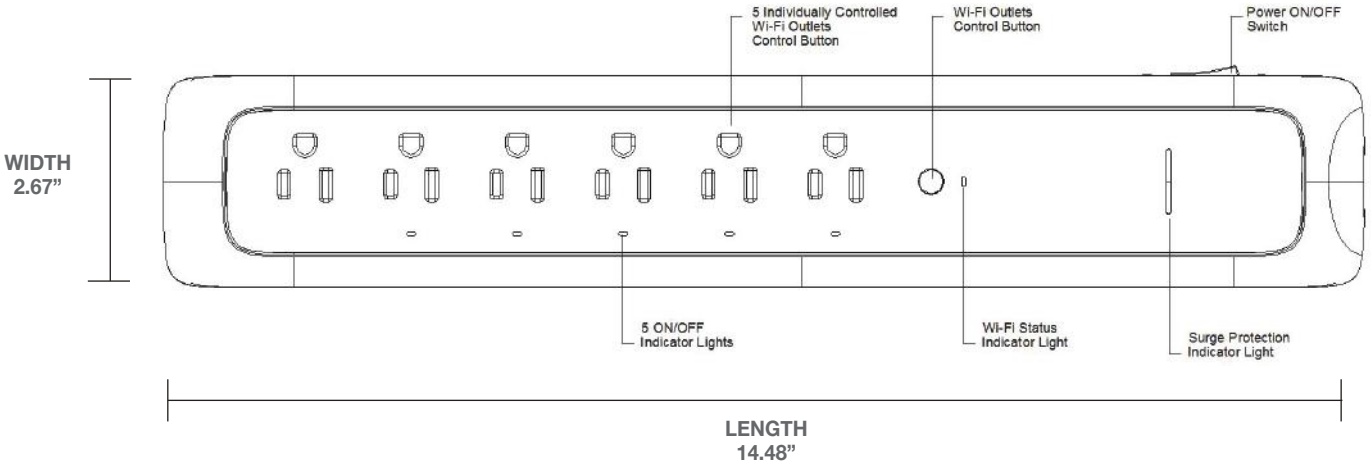

PRODUCT SPECIFICATIONS

General	
Input	125 VAC, 15 A
Rating	15A 125VAC 60Hz 1875W
Standby Power	<0.5W
Surge Protection	490/980/1225 Joules
Material	UL 94-V0 Flame Retardant PC
UL Clamping Voltage	700V L-N
Weight	520g+/-10%
Dimensions (L X W X H)	14.48”x 2.67” x 1.18”
Cable	SJT 14AWG/3C 36 inches
Operating Temperature	-20-40℃
Warranty	
Warranty	1 year
Certifications	
Certifications	FCC, ETL/cETL



1-877-255-0004 | info@greenliteusa.com
www.greenliteusa.com

ENERGY STAR PARTNER
WOMEN OWNED
NMSDC



Electrification

NEW for 2026

INDUCTION COOKTOP

- Efficient, electric cooking
- Cuts carbon emissions





IDEAL FOR :

Retail Programs

Ecommerce & LTOs

New Homes Programs

Low Income Programs

Direct Install Procurement

greenlite™

Electrification

Hybrid Electric Heat Pump Water Heater

The smartest, quietest and most efficient hybrid water heater on the market. Extracts heat from the surrounding air to provide unmatched savings and operates as a conventional electric water heater when the air temperature is too low.



- LED electronic display
- Demand response ready with built-in CTA-2045 port
- Wifi connectivity for mobile alerts
- Easy installation
- 4x more efficient than standard electric water heaters
- Available in 50, 65 & 80 gallons

Efficient

Delivers more hot water than most standard electric water heaters
High efficiency up to 4.0 UEF
Lower annual operating costs

1-877-255-0004 | info@greenliteusa.com
www.greenliteusa.com

Easy Installation

Easily replaces a standard electric water heater
Duct ready – inlet and exhaust
Easy access to side connections and quick access to electrical junction box



LED Multifunction Control Panel

Weekly timer
5 energy-efficient operating modes
Engineering mode
Maintenance reminder
Self-diagnosis

SPECIFICATIONS

	50 GALLON MODEL	65 GALLON MODEL	80 GALLON MODEL
Description			
Normal Gallon Capacity	50	65	80
Rated Gallon Capacity	46	61	74
Voltage	208/240	208/240	208/240
Electric Breaker Size	30	25A(208V)/30A (240V)	30
Energy Info			
Uniform Energy Factor (UEF)	3.75	3.90	4.00
First Hour Rating (FHR)	68	80	88
Cold Climate Efficiency (CCE)	3	3	3
Certifications			
UL60335 - 2 - 40	Yes	Yes	Yes
UL174	Yes	Yes	Yes
NEEA	Tier 4	Tier 4	Tier 4
NSF/ANSI 372	Yes	Yes	Yes
Energy Star	Yes	Yes	Yes
Noise Level	49dba	49.5dba	49dba
Features			
LED Screen	Yes	Yes	Yes
Demand Response with built-in CTA 2045 Port	Yes	Yes	Yes
Leak Detection	Optional	Optional	Optional
Operation Modes	5	5	5
Ambient Operating Range	37~115F	37~115F	37~115F
TP Valve Installed	Yes	Yes	Yes
Element Wattage			
Upper	4500W	4500W	4500W
Lower	4500W	4500W	4500W
Total Unit Wattage (input)	4908W	5500W	4908W
Max Amps	24Amps	-	24Amps
Compressor Capacity	1593W	1500W	1593W
Replaceable Filter	Yes	Yes	Yes
Installation Clearance (back)	0”	0”	0”
Installation Clearance (side)	5.9”	6”	5.9”
Installation Clearance (top)	19.6”	20”	19.6”
Dry Fire Protection	Yes	Yes	Yes



1-877-255-0004 | info@greenliteusa.com
www.greenliteusa.com

ENERGY STAR PARTNER
WOMEN OWNED
NMSDC

greenlite™

Electrification

Energy-Efficient 30” Induction Cooktop

Cook much faster with maximum power to save more time. When you activate the boost function it delivers a short extra burst of heat to reduce cooking times even more, so you can prepare food faster and boil water in a flash.



UL LISTED

ENERGY STAR

- Easy slide controls
- Extra boost function
- Bridge feature
- Easy installation
- Extra safety with automatic switch-off
- Child safety locks



Efficient

Transfer 85-90% of energy to cookware, compared to 70-75% for gas and 65-70% for electric stoves
Use less energy and generate less heat, making them more eco-friendly
Offer precise heat control, which minimizes energy waste

1-877-255-0004 | info@greenliteusa.com
www.greenliteusa.com

ENERGY STAR PARTNER

WOMEN OWNED

NMSDC

Easy Installation

Easily installs into your counter top
Induction cooktops are smaller and lighter than traditional stoves, making them easier to install
Clean slick finish



Extra Boost Function

Adds even more power to speed up the cooking process
All heating zones have extra boost
Easy slide controls

SPECIFICATIONS

Features	
LED Screen	Yes
Boost	All Zones
Bridge	Zone 1 & 2
Child Safety Locks	Yes
Automatic Switch-off	Yes
Slide controls	Digital

Description	
Voltage	220-240V
Frequency	50/60Hz
Weight	47.6 LB
Dimensions	30” L x 21.4” W x 3.5”H

Certifications	
UL Listed	UL858 Section 60A
ENERGY STAR	Yes
FCC	Yes
FCC	Yes

Heating Zones	
Zone 1	7” - 2000W Boost 3000W
Zone 2	7” - 2000W Boost 3000W
Zone 3	11” - 3000W Boost 3600W
Zone 4	6” - 1400W Boost 2000W





1-877-255-0004 | info@greenliteusa.com
www.greenliteusa.com

ENERGY STAR PARTNER
WOMEN OWNED
NMSDC

greenlite™

Electrification

ECO Cordless Lawn Mower

Experience effortless lawn care with a cordless battery-powered mower. Enjoy quiet, eco-friendly performance, easy start-up, and significant cost savings. Say goodbye to gas, oil changes, and noisy engines.

- Cordless convenience
- No more oil changes or gas station trips
- Adjustable height and easy to store
- Quiet and disturbance-free
- Reduce your carbon footprint with zero emissions



ZLM777-1VL

Efficient

Lightweight & easy to handle
Environmentally friendly: zero emissions
Cost-effective: battery charging is cheaper than fuel

1-877-255-0004 | info@greenliteusa.com
www.greenliteusa.com

ENERGY STAR PARTNER
WOMEN OWNED
NMSDC

3 ECO Models

Removable batteries, mulching, adjustable height
Collapsible handle, minimal maintenance

- ZLM777-8L
- ZLM777-1VL
- ZLM777-2VL



ZLM777-8L



ZLM777-2VL

SPECIFICATIONS

	ZLM777-8L	ZLM777-1VL	ZLM777-2VL
Features			
Power Source	Battery	Battery	Battery
Start Type	Push button	Push button	Push Button
Cutting Options	Bag, Mulch	Bag, Mulch	Bag, Mulch, Side-Discharge
Drive Type	N/A	N/A	N/A
Bagger Included	Yes	Yes	Yes
Mulching Capable	Yes	Yes	Yes
Discharge Location	Rear	Rear	Side
Brushless Motor	Yes	Yes	Yes
Number of Batteries Required	1	2	2
Batteries Included	1	2	2
Battery Type	Lithium Ion	Lithium Ion	Lithium Ion
Battery Voltage (V)	20	40	40
Battery capacity (Ah)	4	4	4
Battery Run Time (minutes)	20-30	20-30	20-30
Removable Battery	Yes	Yes	Yes
Charger Included	Yes (2.4A)	Yes (2.4A & 3.0A) Both Optional	Yes (2.4A & 3.0A) Both Optional
Charge Time (hours)	2	1.5	1.5
Collapsible	Yes	Yes	Yes
Vertical Storage	No	No	Yes
Number of Handlebar Positions	1	2	2
Deck Material	Plastic	Plastic	Metal
Recommended for Terrain Type	Flat, Sloped	Flat, Sloped	Flat, Sloped
Dimensions			
Maximum Cutting Height (inches)	2.2	3	3
Minimum Cutting Height (inches)	1.18	1	1
Cut Height Adjustment	3-position	6-position	6-position
Adjustment Type	Single-lever	Single-lever	Single-lever
Cut Width (inches)	12.6	16	18
Cutting Range/Yard Size (acres)	Not Advised	Not Advised	Not Advised
Mower Deck Width (inches)	12.6	16	18
Front Wheel Size (inches)	5	6	7
Rear Wheel Size (inches)	5	8	10
Warranty			
Warranty	1 Year	1 Year	1 Year
CA Residents	N.A.	N.A.	N.A.
Certificate			
Safety Listing	ETL for 2.4A Charger	ETL for 2.4A Charger	ETL for 2.4A Charger

1-877-255-0004 | info@greenliteusa.com
www.greenliteusa.com

ENERGY STAR PARTNER

WOMEN OWNED

NMSDC

greenlite™

Electrification

High End Cordless Lawn Mower

Experience effortless lawn care with a cordless battery-powered mower. Enjoy quiet, eco-friendly performance, easy start-up, and significant cost savings. Say goodbye to gas, oil changes, and noisy engines.

- Cordless convenience
- No more oil changes or gas station trips
- Adjustable height and easy to store
- Quiet and disturbance-free
- Reduce your carbon footprint with zero emissions



MNA192806

Efficient

Lightweight & easy to handle
Environmentally friendly: zero emissions
Cost-effective: battery charging is cheaper than fuel

1-877-255-0004 | info@greenliteusa.com
www.greenliteusa.com

ENERGY STAR PARTNER
WOMEN OWNED
NMSDC

3 High End Models

Removable batteries, mulching, adjustable height
Collapsible handle, minimal maintenance

- MNA192706
- MNA192806
- MNA192707



MNA192706 MNA192707

SPECIFICATIONS

	MNA192706	MNA192806	MNA192707
Features			
Power Source	Battery	Battery	Battery
Start Type	Push button	Push button	Push Button
Cutting Options	Mulch, Side-Discharge	Bag, Mulch, Side-Discharge	Bag, Mulch, Side-Discharge
Drive Type	N/A	N/A	Rear Wheel Drive
Bagger Included	No	Yes	Yes
Mulching Capable	Yes	Yes	Yes
Discharge Location	Side	Side/Rear	Side/Rear
Brushless Motor	Yes	Yes	Yes
Number of Batteries Required	2	2	2
Batteries Included	2	2	2
Battery Type	Lithium Ion	Lithium Ion	Lithium Ion
Battery Voltage (V)	40	40	40
Battery capacity (Ah)	5	5	8
Battery Run Time (minutes)	40	40	60
Removable Battery	Yes	Yes	Yes
Charger Included	Yes (2.0A)	Yes (2.0A)	Yes (4.0A)
Charge Time (hours)	2.5	2.5	2
Collapsible	Yes	Yes	Yes
Vertical Storage	No	Yes	Yes
Number of Handlebar Positions	1	3	3
Deck Material	Steel	Steel	Steel
Recommended for Terrain Type	Flat with obstacles, Sloped	Flat, Sloped	Flat, Sloped
Dimensions			
Maximum Cutting Height (inches)	3.74	3.74	3.74
Minimum Cutting Height (inches)	1.18	1.18	1.18
Cut Height Adjustment	6-position	6-position	6-position
Adjustment Type	Two points	Two points	Two points
Cut Width (inches)	21	21	21
Cutting Range/Yard Size (acres)	1/8 acre to 1/4 acre	1/8 acre to 1/4 acre	1/8 acre to 1/4 acre
Mower Deck Width (inches)	22	22	22
Front Wheel Size (inches)	8	8	8
Rear Wheel Size (inches)	11	11	11
Warranty			
Warranty	3-Year Limited	3-Year Limited	3-Year Limited
CA Residents	Prop 65 Warning(s)	Prop 65 Warning(s)	Prop 65 Warning(s)
Certificate			
Safety Listing	TUV for Machine and Charger	TUV for Machine and Charger	TUV for Machine and Charger

1-877-255-0004 | info@greenliteusa.com
www.greenliteusa.com

ENERGY STAR PARTNER
WOMEN OWNED
NMSDC

Electrification - SMART EV HOME CHARGING STATION

Experience powerful and reliable EV charging with the Greenlite Smart Level 2 Charger, designed and built in Canada to withstand even the harshest weather. This WiFi-enabled charging station offers simple operation and heavy-duty construction, making it perfect for home or commercial use. 1 Enjoy up to 10kW of power with adjustable current output (40A, 32A, 24A, or 16A) for optimized charging speeds. 1 The unit includes a 24ft premium cable for extended reach and ultimate convenience. 2 Plus, with its robust internal design and components, the Greenlite Smart Charger is engineered for maximum operational life, even in the toughest elements. 1 Connect seamlessly with any OCPP 1.6 application and control your charging sessions remotely with WiFi connectivity. 1

ENERGY STAR

Wi-Fi

Built in GFCI

208–240 VAC, 50–60Hz, Single Phase

Connect to any OCPP 1.6 Compatible Software



FEATURES

- Delivers up to 10kW of power, adjustable to 40A, 32A, 24A, or 16A
- Control and monitor your charging sessions remotely for ultimate convenience
- Includes a 24ft premium charging cable for greater flexibility and ease of use
- Works seamlessly with any OCPP 1.6 application
- Maximum operational life, even in extreme environments



1-877-255-0004 | info@greenliteusa.com
www.greenliteusa.com

ENERGY STAR PARTNER

WOMEN OWNED

NMSDC

V1-121224

greenlite™

Electrification - SMART EV HOME CHARGING STATION

PRODUCT SPECIFICATIONS

Connectivity	ESP32 Wi-Fi Extension Board, Compatible with OCPP 1.6 Applications
EVSE Level	SAE J1772; AC Level 2
Max Output Rating	40A; 9.6 kW Maximum Output – For Use with 50A Circuit Rating
Alternate Adjustable Output Ratings	32A; 7.68 kW Maximum Output – For Use with 40A Circuit Rating 24A; 5.76 kW Maximum Output – For Use with 30A Circuit Rating 16A; 3.84 kW Maximum Output – For Use with 20A Circuit Rating
Charger Cable Length	24 ft
Electrical Circuit / Input Power Requirements	Circuit Requirement: Dedicated Single Phase 208-240VAC, 50/60 Hz.; Branch Breaker: Double Pole; Circuit Conductors: Line 1, Line 2, Earth / Ground
Input Power Connection	Standard: Plug-in, NEMA 6-50 or NEMA 14-50 Plug Plug is Removable for Hardwire Connection
Charging Station Color	Standard Black
Installation Rating	NEMA 4, Indoor/Outdoor Rated
Operational Ratings	Temperature: -22°F to 122°F (-30°C to 50°C); Humidity: 95% RH, Non-Condensing
Mounting	Wall or Pedestal Installation
Display & Indicators	LED Charge Status Indicators (Power/Ready, Charging, Fault)
Cable Management	EasyEvPlug with Cable Management™
Standards and Compliance	UL Certified, ENERGY STAR (April 2021)
Dimensions	EVSE: 10.25 x 6.25 x 3.75 inches (26.0 x 16.0 x 9.3 cm)
Country of Origin	Made in Canada



MODEL INFORMATION

MODELS
GRS-6-24-P / GRS-14-24-P

1-877-255-0004 | info@greenliteusa.com
www.greenliteusa.com

V1-121224

ENERGY STAR PARTNER

WOMEN OWNED

NMSDC

greenlite™

Electrification - SMART EV HOME CHARGING STATION

Power your EV with the Greenlite Smart Level 2 Charger, a robust and reliable solution engineered for Canadian climates. This WiFi-enabled charger delivers up to 10kW of power with adjustable current output (40A or 32A) and works seamlessly with any OCPP 1.6J application. It includes a Type 1 plug and a 16ft charging cable for added convenience. Built to last, its durable construction withstands even the harshest weather conditions, ensuring maximum operational life. Control and monitor charging sessions remotely with WiFi connectivity. Experience efficient and hassle-free EV charging with this quality charger made in Canada.

ENERGY STAR

Wi-Fi

Built in GFCI

208–240 VAC, 50–60Hz, Single Phase

Connect to any OCPP 1.6 Compatible Software



FEATURES

- Delivers up to 10kW of power with adjustable current output
- Works seamlessly with any OCPP 1.6J application and includes a Type 1 plug and 16ft charging cable
- Durable construction withstands even the harshest weather conditions
- Control and monitor charging sessions remotely with WiFi connectivity
- Made in Canada





1-877-255-0004 | info@greenliteusa.com
www.greenliteusa.com

ENERGY STAR PARTNER

WOMEN OWNED

NMSDC

V1-121224

greenlite™

Electrification - SMART EV HOME CHARGING STATION

PRODUCT SPECIFICATIONS

Connectivity	Ethernet (RJ-45) Wi-Fi, Compatible with OCPP 1.6J Applications
EVSE Level	AC Level 2
Max Output Rating	40A; 9.6 kW Maximum Output – For Use with 50A Circuit Rating
Alternate Adjustable Output Ratings	32A; 7.68 kW Maximum Output – For Use with 40A Circuit Rating
Charger Cable Length	16 ft
Electrical Circuit / Input Power Requirements	Circuit Requirement: Dedicated Single Phase 208-240VAC, 50/60 Hz.; Branch Breaker: Double Pole; Circuit Conductors: 3 wire - Line 1, Line 2 plus Ground
Input Power Connection	Standard: Plug-in, NEMA 14-50P with 11” cable
Charging Station Color	White front cover, grey back cover
Installation Rating	Type 4 rated for Indoor/Outdoor applications
Operational Ratings	Temperature: -40^{0}F to 167^{0}F (-40^{0}C to 75^{0}C); Humidity: up to 95%, Non-Condensing
Mounting	Wall or pole mounted
Display & Indicators	4 LED Indicators-Power/Charging/Fault/Network
Cable Management	Easy Ev Plug with Cable Management™
Standards and Compliance	UL Certified, ENERGY STAR
Dimensions	EVSE: 12.20 x 8.66 x 3.74 inches
Country of Origin	Made in Canada



MODEL INFORMATION

MODELS
GRS-6-24-P / GRS-14-24-P

1-877-255-0004 | info@greenliteusa.com
www.greenliteusa.com

ENERGY STAR PARTNER

WOMEN OWNED

NMSDC

V1-121224



HVAC

NEW for 2026



PORTABLE AIR CONDITIONER

- Flexible placement
- Easy installation



BATHROOM VENTILATION FAN

- Improves bathroom air quality
- Reduces moisture and odors



FURNACE FILTER

- Improves HVAC energy efficiency
- Promotes ongoing customer engagement



WINDOW AIR CONDITIONER

- Efficient cooling
- Lower energy costs

IDEAL FOR :

Retail Programs

Ecommerce & LTOs

Direct Install Procurement

Multi Family Programs

Low Income Programs

greenlite™

HVAC - WINDOW AIR CONDITIONER

Stay cool and comfortable with this smart, energy-efficient window air conditioner. Perfect for rooms up to 350 square feet, it features WiFi control, a convenient 24-hour timer, and multiple modes including Dry Mode, Energy Saver, and Sleep Mode. The swing louver ensures optimal air circulation, and the front-access filter with check indicator makes maintenance a breeze. This unit is Energy Star and CSA certified for reliable, eco-friendly performance.

PRODUCT SPECIFICATIONS

Cooling Capacity	8,000 BTU
Voltage	115V~/60Hz
CEER	15.0
Input	800W
Current	6.8A
Standby Power	1.2W
Rated Power Input	800W
Control type	Remote control
Refrigerant Type	R-32
24-Hour On/Off Timer	Yes
Modes	Dry, Energy Saver, Fan, Sleep
Room Size	300-350 Square feet
Clean Air Ionizer	No
Design Pressure	300/520 psi
Fan Motor Speed (hi/mi/lo)	1300/1200/1100
Indoor Side Air Flow(Hi/Mi/Lo)	202.94/185.29/167.65 CUFT/min
Indoor side noise level (Hi/Mi/Lo)	55/52/50 dB(A)
Plug Type	LCDI(5-15P)
Power Cord Type	16#x3
Power Cord Length	78 inches / 6.5 ft
Dimensions Inches (W*D*H)	18.98x18.54x13.58
Net/Gross Weight	42.99/50.49 lbs.
Window Width Min/Max	23/36 inches
Window Height Min	19.5 inches
Air Direction Control	Swing Louver
WiFi Connection	Yes
Auto Fan	Yes
Filter Check Indicator	Yes
Warranty	1 Year
Certifications	Energy Star, CSA

DETAILED DIMENSIONS

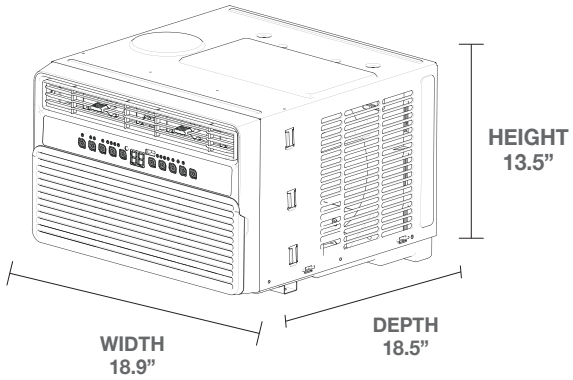



FEATURES

- Convenient WiFi app control
- Remote control
- Energy-saving design
- 4 Customizable modes: Dry, Energy Saver, Fan and Sleep Mode
- Easy-Clean Filter: Front access with check indicator
- Perfect for rooms up to 350 square feet

1-877-255-0004 | info@greenliteusa.com
www.greenliteusa.com

V1 - 02172025

HVAC - INDOOR WINDOW AIR CONDITIONER COVER

The Inside Window Air Conditioner Cover is made of heavy gauge plastic, elasticized to fit securely on all standard window units. It fits all standard window units and keeps out dust and prevents drafts.

PRODUCT SPECIFICATIONS

Application	Indoor Window Air Conditioners
Type	Window-Mount Air Conditioner Cover
Color	White
Dimensions	31in (W) x 4in (D) x 22in (H)

DETAILED DIMENSIONS

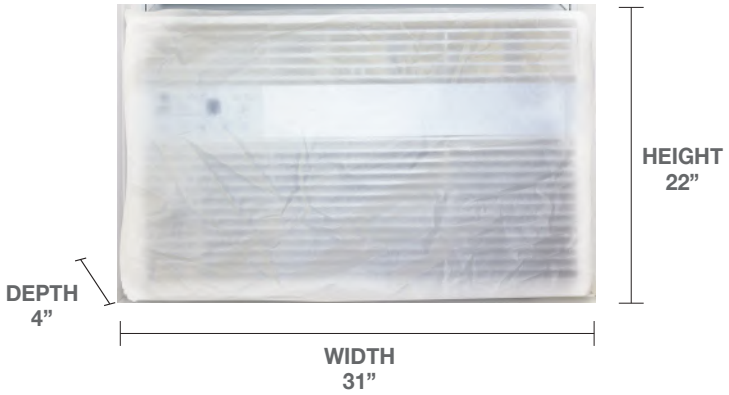



FEATURES

- 3 Mil Indoor Air Conditioner Cover
- Heavy Gauge Plastic
- Elasticized To Fit Securely On All Standard Window Units
- Used On The Portion Of The Air Conditioner That Extends Into The Room To Help Stop Drafts & Keep Dust & Dirt From Blowing in



MODEL INFORMATION

MODEL	CASE QTY
AC4	12

1-877-255-0004 | info@greenliteusa.com
www.greenliteusa.com

V1 - 04132026

HVAC - OUTDOOR WINDOW AIR CONDITIONER COVER

Help protect expensive units from damage caused by winter weather, and reduce uncomfortable drafts and heat loss. They are made of heavy duty polyethylene material that will not crack or mildew. Elasticized for a tight secure fit.

PRODUCT SPECIFICATIONS

Application	Outdoor Window Air Conditioners
Type	Window Cover
Color	Gray
For Use with RVs	No
Dimensions	27in (W) x 16in (D) x 18in (H)
Weight	0.3 lbs
Warranty	1 Year

DETAILED DIMENSIONS





FEATURES

- Heavy Duty Polyethylene Air Conditioner Cover
- Protects A/C unit from Snow, Rain, Dust, Leaves, and Winter Weather
- Helps prevent Cold Drafts and Heat Loss through the A/C during Winter
- Elasticized To Fit Securely On All Standard Window Units



MODEL INFORMATION

MODEL	CASE QTY
AC2H	12

1-877-255-0004 | info@greenliteusa.com
www.greenliteusa.com

V1 - 04082026

greenlite™

HVAC - PORTABLE INVERTER AIR CONDITIONER

Experience powerful, quiet cooling anywhere with this smart, portable AC. This inverter technology-powered unit provides ultimate convenience with easy portability and personalized comfort thanks to individually controlled air outlets. Control it your way - by remote, smartphone app. Plus, its innovative design maximizes cooling efficiency while using 25% less energy than traditional models.

c UL us LISTED



DETAILED DIMENSIONS

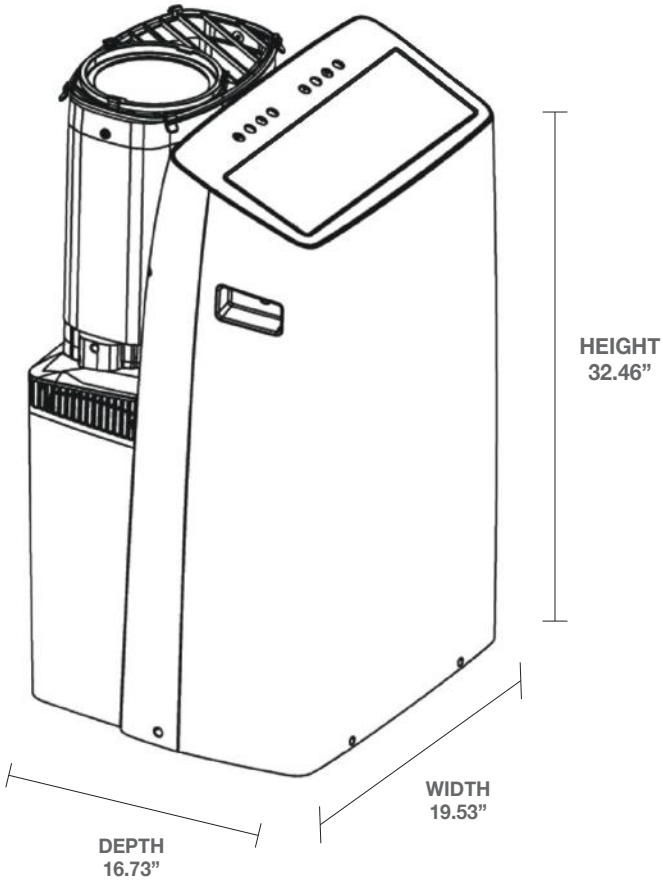

FEATURES

- Efficient cooling: cools areas up to 450 square feet
- Inverter technology for more than 25% energy savings
- Quiet operation at 42.5 db on low mode
- 26 ft further airflow distance with built-in duo hose design
- Smartphone and remote compatibility
- Easy and space-saving installation

1-877-255-0004 | info@greenliteusa.com
www.greenliteusa.com
V1 - 02172025

ENERGY STAR PARTNER
WOMEN OWNED
NMSDC

greenlite™

HVAC - PORTABLE INVERTER AIR CONDITIONER

PRODUCT SPECIFICATIONS

Power Supply	
Voltage Type	115V, 1Ph
Supply Frequency	60Hz
Rated Power Input	1250W
Rated Current	12A
Power Cord Length	5.58 ft.
Control Type	Remote Control

Cooling	
Capacity (Btu/hr)	12,000
SACC(Btu/h)	10,000
Input	1200W
Current	11.8A
EER	2.93W
CEER (Btu/hr/W)	14.7
Standby Power_DOE	1.4W
Off-cycle_DOE	7W

Moisture Removal	
Moisture Removal (35/28.3°C) (L/h)	1.946
Moisture Removal (26.7/20.9°C) (L/h)	1.944

Compressor	
Type	Rotary
Capacity	2035/3255W
Input	325/826W
Rated Current	2.40/5.65A
Refrigerant oil/oil charge (mL)	ESTER OIL VG74 310
Refrigerant Type	R32
Refrigerant Charge	0.40 kg
Flexible Air Exhaust Hose Length	4.92 ft.

Fan Motor	
Input	36W
Speed (High/Med/Low) (r/min)	1300/940/760
Outdoor Fan Motor Speed (High/Med/Low (r/min)	1000/850/680

Evaporator	
Number of Rows	2
Tube Outside Diameter	Ø 7mm
Tube Outside Type	Inner Groove Tube
Tube Pitch(a) x Row Pitch(b)	21x13.37mm
Fin Spacing	1.3mm
Fin Type	Hydrophilic Aluminum
Number of Circuits	2

Condensor	
Number of Rows	4
Tube Outside Diameter (mm)	Ø 5mm
Tube Outside Type	Inner Groove Tube
Tube pitch(a) x row pitch(b)	14.5x12.56mm
Fin spacing (mm)	1.2
Fin Type	Unhydrophilic Aluminium
Number of Circuits	2

Indoor Side Air Flow	
Indoor Side Air Flow (High) (CFM (ft3/min))	375.88
Indoor Side Air Flow (Med) (CFM (ft3/min))	255.88
Indoor Side Air Flow (Low) (CFM (ft3/min))	198.82

Indoor Sound Level	
Indoor Sound Level (High) (dB(A))	53.5
Indoor Sound Level (Med) (dB(A))	49.5
Indoor Sound Level (Low) (dB(A))	42.5

Pressure	
Suction Design Pressure (psi)	340
Discharge Design Pressure (psi)	550

Dimensions and Weight	
Body	19.53”(W) x 16.73”(D) x 32.48”(H)
Weight	72.75lbs

1-877-255-0004 | info@greenliteusa.com
www.greenliteusa.com
V1 - 02172025

ENERGY STAR PARTNER
WOMEN OWNED
NMSDC

HVAC - AIR FILTER

Breathe easier with Greenlite's pleated air filters. Our durable cardboard frame and pleated design maximize surface area for superior dust-holding capacity and improved efficiency. Capture microscopic allergens like pet dander and smoke, plus larger particles like pollen and mold spores, for cleaner air throughout your home. Replacing your filter every 90 days ensures optimal performance, protects your HVAC system, and saves you money on energy bills.

PRODUCT SPECIFICATIONS

Air Filter Type	HVAC panel
Filter Media Material	Poly/Cotton Non-Woven Media
Media Color	White
Ply	5 Layers
Filter Frame Material	Cardboard
Filter Type	Electrostatic
Pleated	Yes
Longevity	3-6 Months
***MERV Rating**	MERV8
Filter Performance Rating (FPR)	7

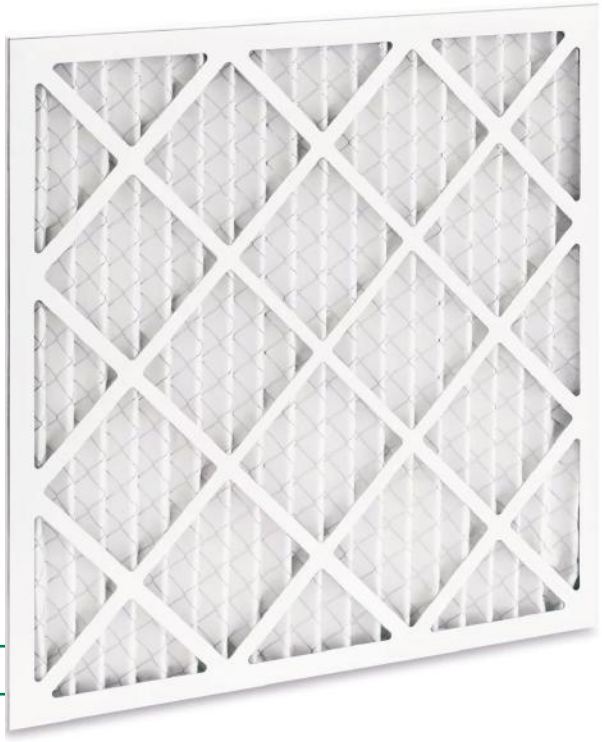

FEATURES

- Removes odors, pollen, dust, smoke, and pet dander
- Save money on energy bills

MODEL INFORMATION

HEIGHT NOMINAL/ACTUAL	WIDTH NOMINAL/ACTUAL	DEPTH NOMINAL/ACTUAL	PACK SIZE	CASE QTY
16”/15.625”	20/19.625”	1/0.75”	2	10
20/19.625”	20/19.625”	1/0.75”	2	10
16/15.625”	25/24.625”	1/0.75”	2	10

*Air filter also available in MERV12



1-877-255-0004 | info@greenliteusa.com
www.greenliteusa.com

V1 - 20250124

HVAC - FURNACE FILTER WHISTLE

This handy device attaches directly to your furnace or air conditioner filter. It monitors airflow and provides an alert when the filter becomes 50% clogged, reminding you to replace it for improved air quality and system performance.

PRODUCT SPECIFICATIONS

Type	Furnace filter whistle
Color	Blue
Weight	0.05 lbs

DETAILED DIMENSIONS

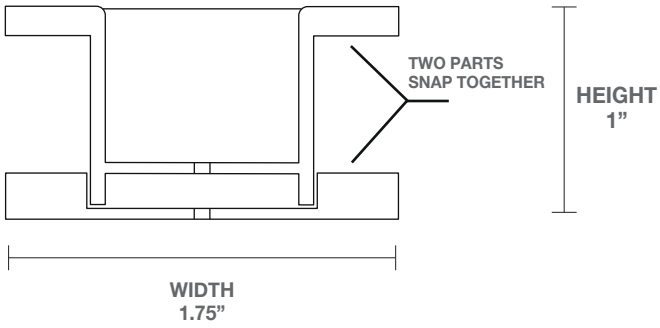



FEATURES

- Built-in whistle alerts you when to change filter
- Durable and reusable for long-term savings
- Keeps your system running smoothly for improved efficiency
- Works with all standard 1-inch filters
- Clips in for easy use



1-877-255-0004 | info@greenliteusa.com
www.greenliteusa.com

V1 - 20250124

HVAC - BATHROOM VENTILATION FAN

Improve air quality in bathrooms with the Greenlite Bathroom Ventilation Fan. This compact, efficient unit quietly removes moisture and odors while providing reliable everyday ventilation in spaces up to 50 sq ft. Its low-profile design blends seamlessly into any bathroom while delivering consistent, long-lasting performance.

PRODUCT SPECIFICATIONS

Airflow Volume (cfm)	50
Motor Power & Type	9W DC Motor
Sound Level (sones)	2
Airflow at 0.25 in. w.g. (cfm)	39
Room Size	50 Sq. Ft.
Housing Dimension	7 1/4" x 7 1/2" x 3 5/8"
Grille Dimension	9 1/2" × 8 5/8"
Duct Size	3”
Venting Type (Int/Ext)	Exterior
Housing Material(s)	Galvanized steel
Voltage / Frequency (V/Hz)	120V/60Hz
Mounting Location	Ceiling or Wall
Unit Weight	3.66 lbs.
Warranty	1 Year
Certifications	ETL & cETL , HVI , ENERGY STAR

DETAILED DIMENSIONS

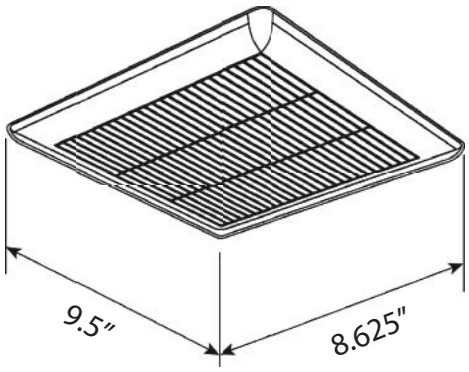

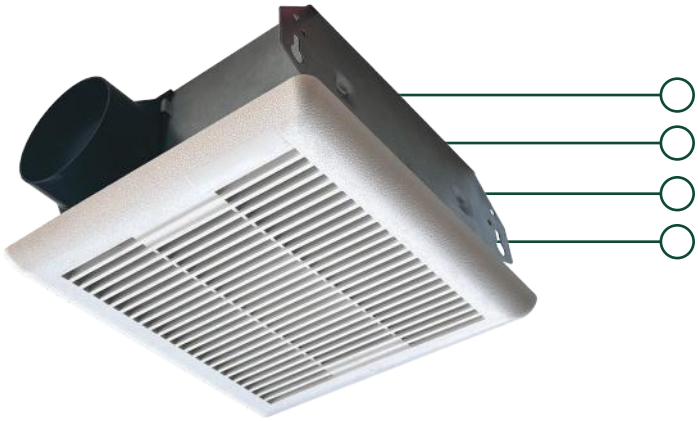

FEATURES

- 50 CFM airflow
- Quiet 2-sone operation
- Compact, low-profile design
- Galvanized steel housing



MODEL INFORMATION

MODEL	CASE QTY
G-VTF-50	12

1-877-255-0004 | info@greenliteusa.com
www.greenliteusa.com

V3 - 20260223

LED Lighting



NEW for 2026

15W TYPE A+B HYBRID T8 LED TUBE

- Replaces fluorescent tubes
- Energy-efficient design



3.5W DESK LAMP

- Portable lighting solution
- Low energy use



10W RETROFIT DOWNLIGHT

- 5 CCT selectable
- ENERGY STAR® certified



DUSK TO DAWN NITE LITE (CIRCLE)

- Automatic on/off
- Improves safety & savings



DUSK TO DAWN NITE LITE WITH PLUG

- Improves safety & savings
- Compact design with plug

IDEAL FOR :

Retail Programs | School Kits | Welcome Kits & Direct Mail Kits | Ecommerce & LTOs | Small Business Kits | Direct Install Procurement | Food Bank Programs | Non-Profit Organization Programs (CBO/CAA)

LED Lighting - FILAMENT STYLE BULB

Everyday, classic "filament-style" household LED bulbs that set the new standard for energy-efficiency and longevity.

PRODUCT SPECIFICATIONS

Light Source	LED
Warranty	3 Years
Certifications	FCC, cULus, RoHS

DETAILED DIMENSIONS

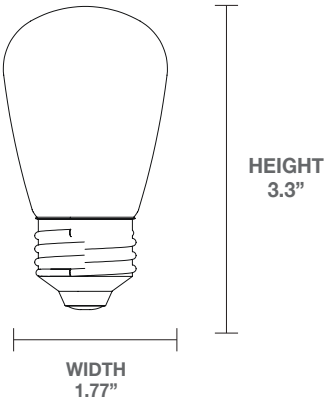



FEATURES

- Lights everywhere
- Energy-saving LED
- Residential and commercial use
- Suitable for fully enclosed fixtures

MODEL INFORMATION

WATTS	FINISH	REPLACES	LUMENS	DIMMABILITY	BULB SHAPE	BASE	RATED LIFE HOURS	UL FIXTURE RATING	CCT**	UL LOCATION RATING	PACK SIZE	CASE QTY
2.2W	CLEAR	15W	200	YES*	S14	E26	15,000	ENCLOSED	2700K	DAMP	1	48

APPLICATIONS

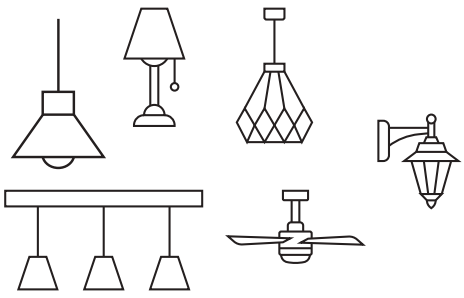



1-877-255-0004 | info@greenliteusa.com
www.greenliteusa.com

V1-03022025

LED Lighting - OMNI A19

A-19 type LED omni bulbs, available in both dimmable and non-dimmable options, offer a cost-effective lighting solution. They deliver bright, long-lasting illumination while significantly reducing energy consumption

PRODUCT SPECIFICATIONS

Light Source	LED
Rated Voltage	120V
Bulb Shape	A19
Base	E26 Medium
Available Dimmability	Dimmable, Non-dimmable
Available UL Location Rating	Damp
Available Rated Life Hours	15,000 and 25,000
Available UL Fixture Rating	Enclosed, Non-enclosed
Warranty	3 Years
Certifications	cULus, RoHS



APPLICATIONS

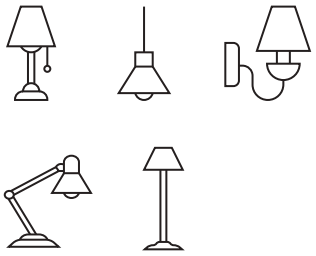

FEATURES

- Shatterproof
- Energy-saving LED
- Residential and commercial use

MODEL INFORMATION

WATTS	REPLACES	LUMENS	CCT*	PACK SIZE
6W	40W	480	2700K, 3000K, 5000K	1, 2, 4
8W	60W	800	3000K, 4000K, 5000K	1, 2, 4
9W	60W	800	2700K, 3000K, 4000K, 5000K	1, 2, 4, 10
11W	75W	1100	3000K	1, 2, 4
14W	100W	1500	3000K, 5000K	1, 2, 4
15W	100W	1600	3000K, 5000K	1, 2, 4

*2700K - SOFT WHITE | 3000K - BRIGHT WHITE | 4000K - COOL WHITE | 5000K - DAYLIGHT



1-877-255-0004 | info@greenliteusa.com
www.greenliteusa.com

V1-01162027

LED Lighting - OMNI A21

Greenlite high-wattage LED bulbs deliver powerful, energy-efficient illumination for large spaces. Perfect for warehouses, garages, factories, and commercial applications, these bulbs provide bright, long-lasting light while significantly reducing energy consumption compared to traditional HID or fluorescent bulbs.

c UL us LISTED

RoHS

PRODUCT SPECIFICATIONS

Light Source	LED
Rated Voltage	120-277V
Bulb Shape	A21
Base	E26 Medium
CCT*	5000K -Daylight
UL Location Rating	Damp
UL Fixture Rating	Enclosed
Warranty	3 Years
Certifications	cULus, RoHS



APPLICATIONS

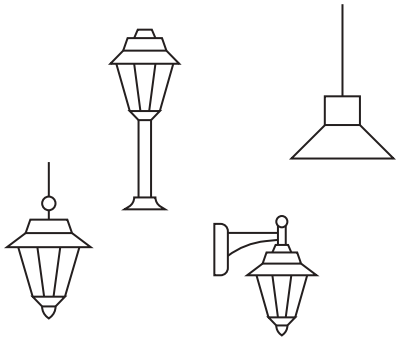

FEATURES

- High wattage bulbs
- Shatterproof
- Energy-saving LED
- Residential and commercial use

MODEL INFORMATION

WATTS	REPLACES	LUMENS	DIMMABILITY	RATED LIFE HOURS	PACK SIZE	CASE QTY
12W	100W	1200	NO	25,000	1	48
19W	125W	2000	NO	25,000	1	24
20W	125W	2600	YES*	25,000	1	24
20W	125W	2600	NO	25,000	1	24
25W	150W	2550	NO	25,000	1	24

*This lamp may not be compatible with all dimmers.



1-877-255-0004 | info@greenliteusa.com

www.greenliteusa.com

ENERGY STAR PARTNER

WOMEN OWNED

NMSDC

V1-03052025

LED Lighting - 5.5W A15

A-15 type LED omni bulbs offer a cost-effective lighting solution. They deliver bright, long-lasting illumination while significantly reducing energy consumption. Apply these lights to your lamps, sconces, chandeliers, pendant fixtures, hanging fixtures, bedroom, bathroom, kitchen, post lights, fans, and more!

c UL us LISTED

RoHS

PRODUCT SPECIFICATIONS

Wattage	5.5W
Incandescent Equivalent	40W
Voltage	120V
Lumens	450
Bulb Shape	A15
CCT	3000K
CRI	80
Base	E26
Material	Plastic
UL Location Rating	Damp
UL Fixture Rating	Enclosed
Rate Life Hours	25000
Dimmable	Yes
Certifications	UL
Warranty	3 Years

DETAILED DIMENSIONS

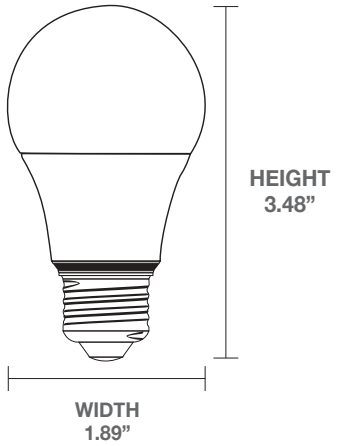



FEATURES

- Household and fan bulb
- Instant On
- Energy-saving LED

MODEL INFORMATION

MODEL NUMBER	CASE QTY
5.5W/OMNID/A15	48



1-877-255-0004 | info@greenliteusa.com
www.greenliteusa.com

ENERGY STAR PARTNER

WOMEN OWNED

NMSDC

V1-013025

LED Lighting - BR30 FLOODLIGHTS

Enjoy hassle-free, energy-efficient lighting with this dimmable LED downlight bulb. Its standard base allows for easy installation in recessed cans throughout your home, even in damp locations. Long life and reliable performance minimize the need for replacements, making it perfect for both residential and commercial applications.

PRODUCT SPECIFICATIONS

Light Source	LED
Bulb Shape	BR30
Base	E26 Medium
CCT	3000K - Bright White
UL Location Rating	Damp
Warranty	3 Years
Certifications	cULus, RoHS

DETAILED DIMENSIONS

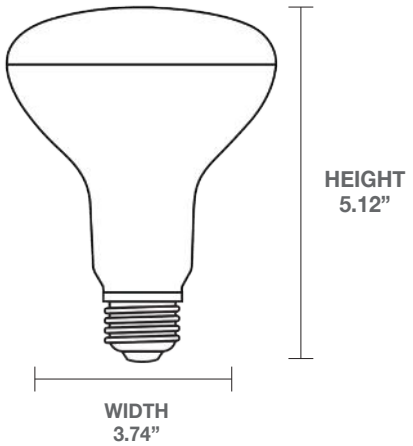

FEATURES



- Shatterproof
- 105° beam angle
- Ideal for track and recess lighting

APPLICATIONS



MODEL INFORMATION

WATTS	REPLACES	LUMENS	DIMMABILITY	RATED LIFE HOURS	UL FIXTURE RATING	PACK SIZE	CASE QTY
8W	65W	670	YES*	25,000	NON-ENCLOSED	2,4	24
11W	65W	850	YES*	25,000	NON-ENCLOSED	2,4	24

*This lamp may not be compatible with all dimmers.



1-877-255-0004 | info@greenliteusa.com
www.greenliteusa.com

V1 - 20250129

LED Lighting - R20 FLOODLIGHT

This dimmable LED downlight bulb is the perfect energy-efficient solution for recessed cans in any space. Its compact size, standard base, and easy installation make it a breeze to upgrade your home or business lighting. Enjoy long life, reliable performance, and ideal color temperature, brightness, and beam angle for optimal illumination.

PRODUCT SPECIFICATIONS

Light Source	LED
Bulb Shape	R20
Base	E26 Medium
CCT	3000K - Bright White
UL Location Rating	Damp
Warranty	3 Years
Certifications	cULus, RoHS

DETAILED DIMENSIONS

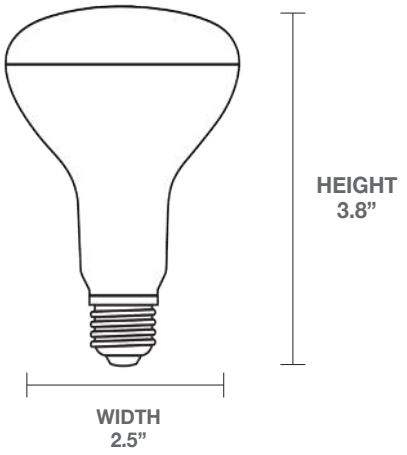

FEATURES



APPLICATIONS

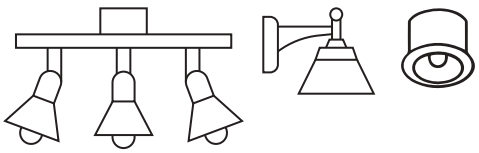

MODEL INFORMATION

WATTS	REPLACES	LUMENS	DIMMABILITY	RATED LIFE HOURS	UL FIXTURE RATING	PACK SIZE	CASE QTY
7W	50W	550	YES*	25,000	NON-ENCLOSED	2,4	24

*This lamp may not be compatible with all dimmers.



1-877-255-0004 | info@greenliteusa.com
www.greenliteusa.com

V1 - 20250129

LED Lighting - 5W LED GLOBE

Globe-shaped bulbs are conventionally used for both household and commercial vanity fixtures, as well as other artistic applications where a spherical shape is more aesthetic.

c UL us LISTED

PRODUCT SPECIFICATIONS

Light Source	LED
Bulb Shape	G25
Base	E26 Medium
CCT	3000K - Bright White
UL Location Rating	Damp
Warranty	3 Years
Certifications	cULus, RoHS

DETAILED DIMENSIONS

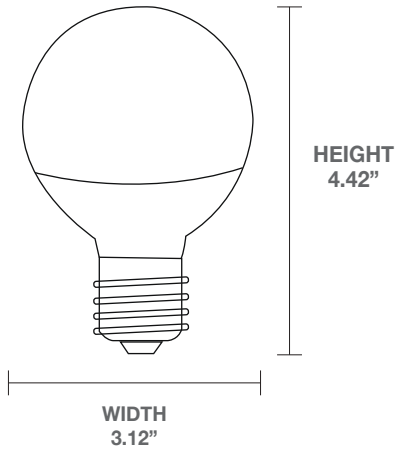

FEATURES



APPLICATIONS

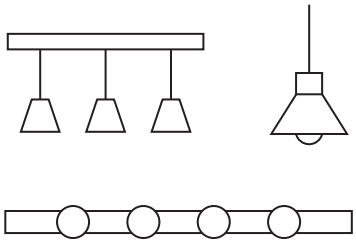

MODEL INFORMATION

WATTS	REPLACES	LUMENS	DIMMABILITY	RATED LIFE HOURS	UL FIXTURE RATING	PACK SIZE	CASE QTY
5W	40W	450	NO	25,000	NON-ENCLOSED	2	24



1-877-255-0004 | info@greenliteusa.com
www.greenliteusa.com

V1 - 012925

ENERGY STAR PARTNER · WOMEN OWNED · NMSDC

LED Lighting - HIGH EFFICIENCY LED BULBS

Greenlite's High Efficiency LED bulbs for general household use are groundbreaking. As the lighting industry advances, Greenlite continues to deliver innovative lighting solutions for significant energy savings. These High Efficiency bulbs, identical in size and shape to traditional LED A19s, boast 133,137 and 145 lumens per watt, a 5x longer lifespan, and over 90% energy savings.

c UL us LISTED

RoHS

PRODUCT SPECIFICATIONS

Light Source	LED
Bulb Shape	A19
Base	E26 Medium
CCT	3000K - Bright White
UL Location Rating	Damp
Warranty	3 Years
Certifications	cULus, RoHS

DETAILED DIMENSIONS

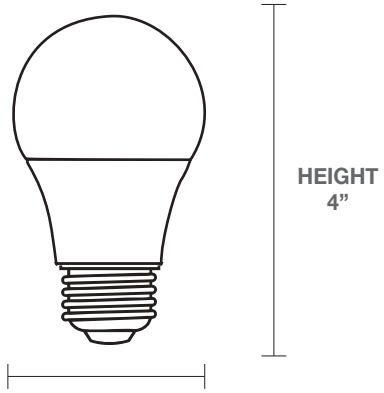

FEATURES



- Shatterproof
- High lumens per watt
- 90% energy savings

APPLICATIONS



MODEL INFORMATION

WATTS	REPLACES	LUMENS	LUMENS PER WATT	DIMMABILITY	RATED LIFE HOURS	UL FIXTURE RATING	PACK SIZE	CASE QTY
6W	60W	800	133	NO	25,000	ENCLOSED	4	24
8W	75W	1100	137	NO	25,000	ENCLOSED	4	24
11W	100W	1600	145	NO	25,000	ENCLOSED	4	24



1-877-255-0004 | info@greenliteusa.com
www.greenliteusa.com

ENERGY STAR PARTNER

WOMEN OWNED

NMSDC

V1 - 012825

LED Lighting - DUSK TO DAWN AND MOTION SENSOR BULB

Equipped with built-in sensors, this innovative dusk to dawn LED bulb automatically adjusts to 20% brightness in low light and turns off during the day. It also brightens to 100% when motion is detected, saving 80% energy.

PRODUCT SPECIFICATIONS

Wattage 20%	1.6W
Wattage 100%	8W
Voltage	120V
Lumens 20%	160
Lumens 100%	800
CCT	5000K
CRI	80
Bulb Shape	A19
Base	E26
Material	Plastic
UL Location Rating	Damp
UL Fixture Rating	Fully enclosed
Rate Life Hours	15000
Standard	ETL
Warranty	2 Years

DETAILED DIMENSIONS

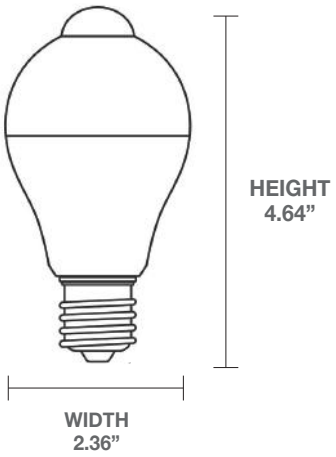



FEATURES

- Automatic ON at dusk / OFF at dawn
- Night mode: 20% brightness, 100% when motion is detected
- Instantly illuminates when movement is detected
- For use in indoor/outdoor spaces (hallways, garages, patios)
- Stays on for 1 minute after last motion is detected



MODEL INFORMATION

MODEL NUMBER	CASE QTY

1-877-255-0004 | info@greenliteusa.com
www.greenliteusa.com

V1 - 20250123

LED Lighting - 9W A19 DUSK TO DAWN SENSOR 60W EQUIVALENT

This Greenlite 9W A19 LED bulb offers dusk-to-dawn functionality, automatically illuminating your space when it gets dark and turning off at dawn. This 60W equivalent bulb is perfect for outdoor security lighting, providing peace of mind and significant energy savings.

c UL us LISTED

RoHS

PRODUCT SPECIFICATIONS

Type	LED
CCT*	3000K - Bright White
Bulb Shape	A19
Base	E26 Medium
UL Location Rating	Damp
Standard	cULus, RoHS
Warranty	3 Years

DETAILED DIMENSIONS

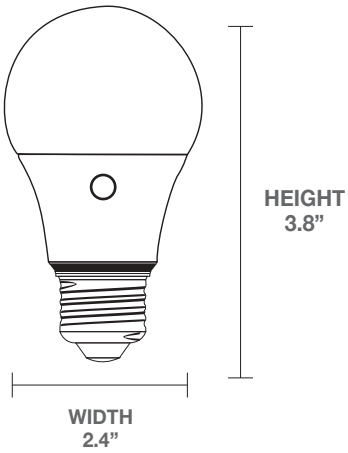



FEATURES

- Automatic ON at dusk / OFF at dawn
- Indoor and outdoor use
- Shatterproof

APPLICATIONS

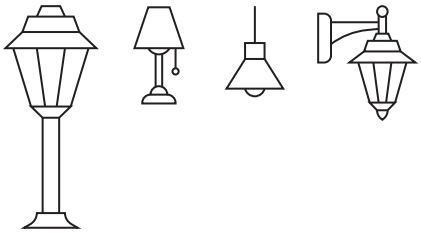



MODEL INFORMATION

WATTS	REPLACES	LUMENS	DIMMABILITY	CCT	RATED LIFE HOURS	UL FIXTURE RATING	PACK SIZE	CASE QTY
9W	60W	800	NO	3000K	25,000	ENCLOSED	1	24

1-877-255-0004 | info@greenliteusa.com
www.greenliteusa.com

V1 - 20250130

ENERGY STAR PARTNER

WOMEN OWNED

NMSDC

LED Lighting - PAR FLOODLIGHTS

Upgrade your lighting with Greenlite LED Reflector Bulbs! These versatile bulbs are perfect for general, track, and recessed lighting, offering energy-efficient replacements for incandescent and halogen bulbs. Their weatherproof design also makes them ideal for outdoor floodlights. Enjoy long-lasting performance and bright, beautiful light with Greenlite.

c UL us LISTED

RoHS

PRODUCT SPECIFICATIONS

Light Source	LED
Base	E26 Medium
Warranty	3 Years
Certifications	cULus, RoHS

APPLICATIONS

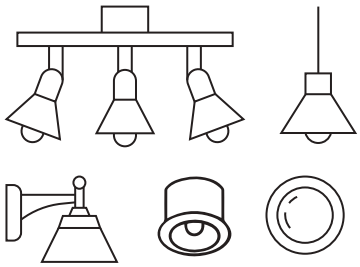

FEATURES

- Indoor and outdoor
- 40° beam angle
- Ideal for track and recessed lighting
- Shatterproof





MODEL INFORMATION

WATTS	REPLACES	LUMENS	BULB SHAPE	CCT*	DIMMABILITY	RATED LIFE HOURS	UL FIXTURE RATING	LENGTH	DIAMETER	UL LOCATION RATING	PACK SIZE	CASE QTY
7W	60W	500	PAR16	3000K	YES**	25,000	ENCLOSED	2.83”	1.96”	DAMP	1	48
7W	50W	500	PAR20	2700K,3000K,4000K,5000K	YES**	25,000	NON-ENCLOSED	3.1”	2.4”	WET	1,2	24
11W	75W	850	PAR30	2700K,3000K,4000K,5000K	YES**	25,000	NON-ENCLOSED	4.5”	3.7”	WET	1,2	24
11W SHORT NECK	75W	900	PAR30	2700K,3000K,4000K,5000K	YES**	25,000	NON-ENCLOSED	3.7”	3.7”	WET	1	48
15W	120W	1250	PAR38	2700K,3000K	YES**	25,000	NON-ENCLOSED	5.1”	4.7”	WET	1,2	24

*2700K - SOFT WHITE | 3000K - BRIGHT WHITE | 4000K - COOL WHITE | 5000K - DAYLIGHT
**This lamp may not be compatible with all dimmers.

1-877-255-0004 | info@greenliteusa.com
www.greenliteusa.com

V1 - 20250130

ENERGY STAR PARTNER

WOMEN OWNED

NMSDC

LED Lighting - 12W PAR38 DUSK TO DAWN SENSOR 120W EQUIVALENT

The Greenlite Dusk-to-Dawn PAR38 LED bulb offers energy-efficient and automated lighting for your outdoor spaces. This 12W bulb (120W equivalent) automatically turns on at dusk and off at dawn, providing convenient and reliable illumination. Perfect for enclosed fixtures, it's ideal for illuminating pathways, driveways, and security lighting.

c UL us LISTED · RoHS · Dusk to Dawn Sensor

PRODUCT SPECIFICATIONS

Light Source	LED
Bulb Shape	PAR38
Base	E26 Medium
UL Location Rating	Wet
Warranty	3 Years
Certifications	cULus, RoHS

DETAILED DIMENSIONS

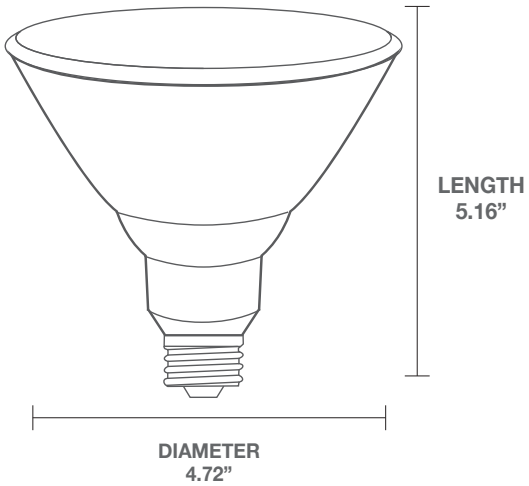



FEATURES

- On at night. Off in the day.
- Indoor and outdoor use
- 40° beam angle
- Ideal for track and recessed lighting
- Shatterproof

APPLICATIONS

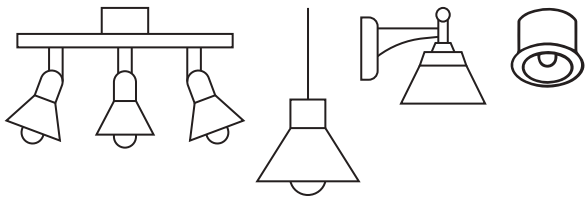

MODEL INFORMATION

WATTS	REPLACES	LUMENS	DIMMABILITY	CCT	RATED LIFE HOURS	UL FIXTURE RATING	PACK SIZE	CASE QTY
12W	120W	1250	NO	3000K	25,000	ENCLOSED	1	24

*2700K - SOFT WHITE | 3000K - BRIGHT WHITE | 4000K - COOL WHITE | 5000K - DAYLIGHT



1-877-255-0004 | info@greenliteusa.com
www.greenliteusa.com

V1 - 20250130

ENERGY STAR PARTNER · WOMEN OWNED · NMSDC

LED Lighting - SELECTABLE CCT PAR SERIES LED BULBS

Upgrade your home with Greenlite's Selectable CCT PAR Series LED Bulbs. Designed for enclosed fixtures with a medium E26 base, these dimmable bulbs offer five color temperature options (2700K, 3000K, 3500K, 4000K, and 5000K). Simply use the switch on the bulb to choose your preferred light, making it easy to create the perfect ambiance for any space.

c UL us LISTED

PRODUCT SPECIFICATIONS

Light Source	LED
Rated Voltage	120V
Lifetime	15,000 hours
Bulb Type	Reflector
Color Temperature	27/30/35/40/50K
Base	E26
CRI	80
UL Fixture Rating	Enclosed
Shatterproof	Yes
Beam Angle	40°
Dimmability	Yes
Certifications	cULus, RoHS, FCC
Warranty	2 years

DETAILED DIMENSIONS

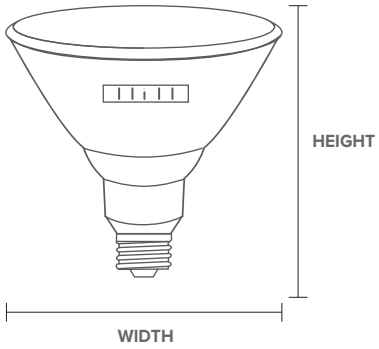



PAR20
5W/PAR20D/5CCT



PAR30 SHORT
9W/PAR30D/SN/5CCT



PAR30 LONG
9W/PAR30D/5CCT



PAR38
12W/PAR38D/5CCT

FEATURES

- 5CCT Selectable CCT (27/30/35/40/50K)
- Dimmable
- 2 years warranty

MODEL INFORMATION

MODEL	WATTAGE	LUMENS	UL ENVIRONMENTAL RATING	WIDTH IN "	HEIGHT IN "	CASE QTY
5W/PAR20D/5CCT	5W	500	WET	2.48"	3.42"	24
9W/PAR30D/5CCT	9W	800	DAMP	3.74"	4.64"	24
9W/PAR30D/SN/5CCT	9W	800	DAMP	3.74"	3.7"	24
12W/PAR38D/5CCT	12W	1200	WET	5.07"	4.76"	24



1-877-255-0004 | info@greenliteusa.com
www.greenliteusa.com

ENERGY STAR PARTNER

WOMEN OWNED

NMSDC

V1-121124

LED Lighting - High Wattage 29W A23

Greenlite high-wattage LED bulbs deliver powerful, energy-efficient illumination for large spaces. Perfect for warehouses, garages, factories, and commercial applications, these bulbs provide bright, long-lasting light while significantly reducing energy consumption compared to traditional HID or fluorescent bulbs.

PRODUCT SPECIFICATIONS

Wattage	29W
Incandescent Equivalent	200W
HID Equivalent	125W
Voltage	120-277V
Lumens	3050
Bulb Shape	A23
CCT	5000K
CRI	80
Base	E26
Material	Plastic
UL Location Rating	Damp
UL Fixture Rating	Enclosed
Rate Life Hours	25000
Dimmable	No
Dimensions	6.30” x 2.87”
Certifications	UL
Warranty	3 Years



APPLICATIONS

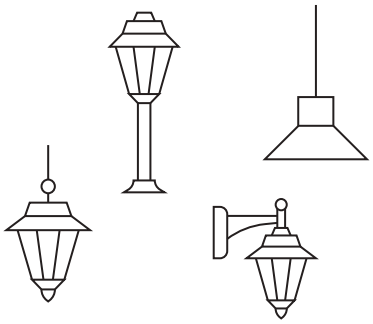

FEATURES

- High wattage bulb
- High lumens
- Energy-saving LED

MODEL INFORMATION

MODEL NUMBER	CASE QTY
29W/H/50K	24



*This lamp may not be compatible with all dimmers.

1-877-255-0004 | info@greenliteusa.com
www.greenliteusa.com

V1-012925

LED Lighting - PL LAMPS

PL replacement LED bulb for fully enclosed or open fixtures. These versatile lamps can be either vertically or horizontally installed without affecting longevity. Most commonly used for wall sconces and recessed cans in hospitals, hotels, condominiums retail spaces, and more.

PRODUCT SPECIFICATIONS

Light Source	LED
Rated Voltage	120-277V
Lifetime	50,000 hours
Bulb Type	PL
Color Temperature	3500K or 4000K
UL Location Rating	Damp
CRI	80
Shatterproof	Yes
Dimmable	No
Certifications	Classified cULus
Warranty	5 years

APPLICATIONS

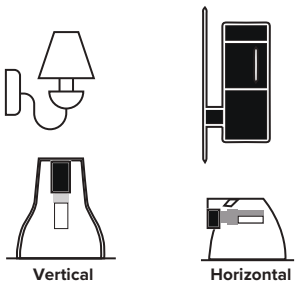

Vertical Horizontal

FEATURES



- Adjustable base 180°
- Beam angle 140°
- Electric ballast compatible
- Suitable for use in wall-mounted fixtures and ceiling fixtures
- Type A & B

12W G24Q 4-PIN
12W/LED/PLC/G24Q



- Beam angle 260°
- Bypass
- Suitable for use in wall-mounted fixtures and ceiling fixtures
- Type B
- Magnetic ballast or bypass

5W GX23 2-PIN
5W/LED/PLC/GX23

MODEL INFORMATION

MODEL	WATTAGE	LUMENS	BASE TYPE	UL FIXTURE RATING	WIDTH IN ”	HEIGHT IN ”	CASE QTY
5W/LED/PLC/GX23/40K	5W	520	GX23	ENCLOSED	1.46”	4.13”	48
12W/LED/PLC/G24Q/35K	12W	1150	G24Q	NON-ENCLOSED	1.37”	5.82”	48
12W/LED/PLC/G24Q/40K	12W	1150	G24Q	NON-ENCLOSED	1.37”	5.82”	48



1-877-255-0004 | info@greenliteusa.com
www.greenliteusa.com

V1-03052025

LED Lighting - HOLIDAY LED STRING LIGHTS

Empower your utility customers with effortless holiday decorating using our energy-efficient C6 LED diamond-cut faceted string lights. These durable, weather-resistant lights illuminate any space, indoors or out, from Christmas trees to patios. Each 23.6-foot strand features 70 cool-to-the-touch LED bulbs for a warm glow and energy savings. End-to-end connectivity allows linking up to 45 strands (3150 lights) for large-scale displays, ideal for any celebration. Backed by a 3-year warranty and including spares, these lights ensure customer satisfaction.

CERTIFIED RoHS ENERGY STAR

PRODUCT SPECIFICATIONS

Voltage	120V AC
Wattage	4.5W
Bulb Type	C6 LED (Diamond Cut Faceted)
Bulb Spacing	4” inches
Wire Color	Green
Strand Length	23.6 ft.
Number of Bulbs	70 per strand
Lifetime Hours	25,000
Warranty	3 Years
Usage	Indoor / outdoor
Certifications	UL, Energy Star

DETAILED DIMENSIONS

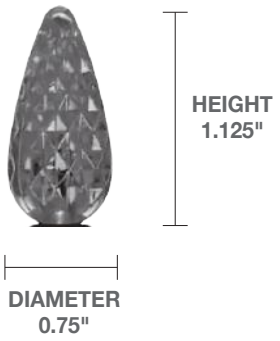

FEATURES

- Connects up to 45 strings
- 23.6’ long green cord
- Evenly spaced 4” apart
- Includes 2 spare C6 bulbs and fuses







MODEL INFORMATION

MODEL	LED COLOR(S)	DIMMABILITY	PACK SIZE	CASE QTY
C6/L70/WW/4IN	WARM WHITE	NO	1	24
C6/L70/MC/4IN	RED, YELLOW, BLUE GREEN, ORANGE	NO	1	24

1-877-255-0004 | info@greenliteusa.com
www.greenliteusa.com

V1 - 20230211

ENERGY STAR PARTNER WOMEN OWNED NMSDC

LED Lighting - 12W A19 3-WAY

Greenlite LED 3-Way A19 light bulb provides omni-directional light perfect for any room in your home. This bulb creates a comfortable atmosphere by providing 3 wattage levels of bright white light that lasts 25,000 hours.

PRODUCT SPECIFICATIONS

Wattage	4/8/12W
Incandescent Equivalent	40/60/100W
Voltage	120V
Lumens	500/1000/1500
Bulb Shape	A19
CCT	3000K
CRI	80
Base	E26
Material	Plastic
UL Location Rating	Damp
UL Fixture Rating	Enclosed
Rate Life Hours	25000
Dimmable	No
Certifications	UL
Warranty	3 Years

DETAILED DIMENSIONS

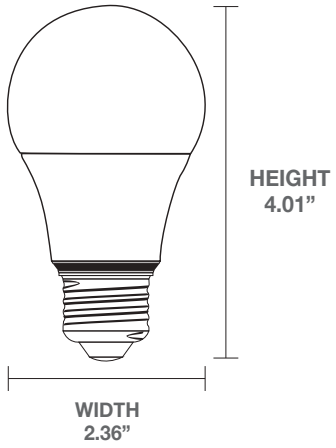



FEATURES

- 3 wattage levels: 4/8/12W
- Instant On
- Energy-saving LED

MODEL INFORMATION

MODEL NUMBER	CASE QTY
12W/A19/3WAY/2	24



1-877-255-0004 | info@greenliteusa.com
www.greenliteusa.com

V1-013025

LED Lighting - FILAMENT STYLE BULBS

Everyday, classic "filament-style" household LED bulbs that set the new standard for energy-efficiency and longevity.



FEATURES

- Lights everywhere
- Energy-saving LED
- Residential and commercial use

PRODUCT SPECIFICATIONS

Light Source	LED
Warranty	3 Years
Certifications	cULus, RoHS

MODEL INFORMATION

GENERAL PURPOSE

WATTS	REPLACES	LUMENS	DIMMABILITY	BULB SHAPE	BASE	RATED LIFE HOURS	UL FIXTURE RATING	CCT**	UL LOCATION RATING	PACK SIZE	CASE QTY
5W	40W	450	YES*	A15	E26	15,000	ENCLOSED	2700K	WET	1	48
7W	60W	800	YES*	A19	E26	15,000	ENCLOSED	2700K	DAMP	1,4	24,48
14W	100W	1600	YES*	A21	E26	15,000	ENCLOSED	2700K	DAMP	1,4	24,48

CANDLE

4W	40W	330	YES*	B10	E12	15,000	ENCLOSED	2700K	DAMP	1,4	24,48
4W	40W	300	YES*	B10	E26	15,000	ENCLOSED	2700K	DAMP	1,4	24,48
4.5W	60W	500	YES*	B10	E26	15,000	ENCLOSED	3000K	WET	1,4	24,48
5W	60W	500	YES*	B10	E12	15,000	NON-ENCLOSED	2700K	DAMP	1,4	24,48

GLOBE

4.5W	40W	470	YES*	G25	E26	15,000	ENCLOSED	2700K, 3000K	DAMP	4	24



1-877-255-0004 | info@greenliteusa.com
www.greenliteusa.com

V1-01162025

greenlite™

LED Lighting - FILAMENT STYLE BULBS

APPLICATIONS

GENERAL PURPOSE



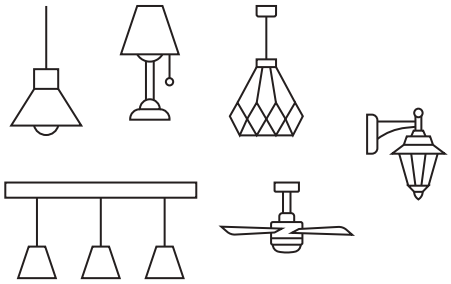

CANDELABRA





GLOBE



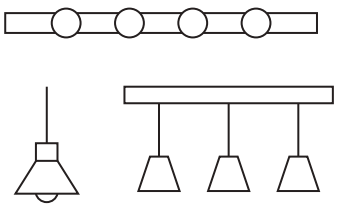

*This lamp may not be compatible with all dimmers.
**2700K - SOFT WHITE | 3000K - BRIGHT WHITE | 4000K - COOL WHITE | 5000K - DAYLIGHT

1-877-255-0004 | info@greenliteusa.com
www.greenliteusa.com

V1-01162028

ENERGY STAR PARTNER
WOMEN OWNED
NMSDC

LED Lighting - EVERYDAY BASIC LED A19 BULBS

A-19 type LED omni bulbs, available in both dimmable and non-dimmable options, offer a cost-effective lighting solution. They deliver bright, long-lasting illumination while significantly reducing energy consumption

PRODUCT SPECIFICATIONS

Light Source	LED
Bulb Shape	A19
Base	E26 Medium
Rated Life Hours	10,000 Hours
UL Location Rating	Damp
UL Fixture Rating	Fully Enclosed
Warranty	3 Years
Certifications	cULus, RoHS

DETAILED DIMENSIONS

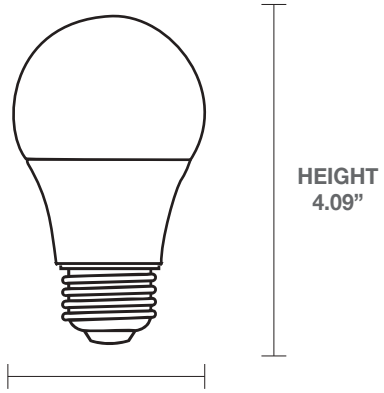

FEATURES

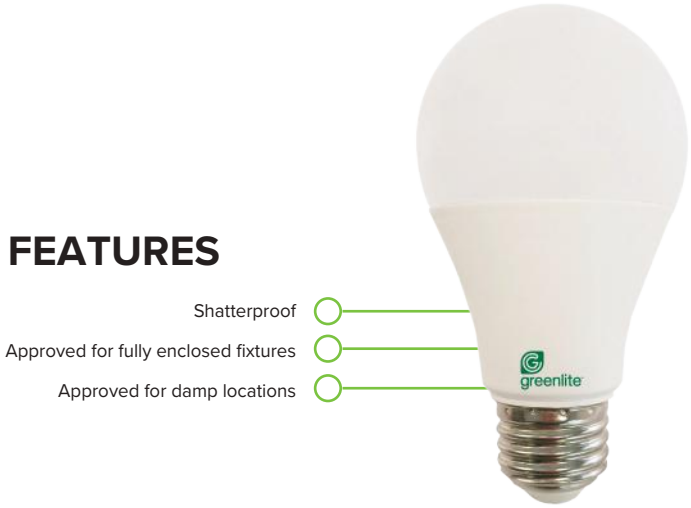

APPLICATIONS



MODEL INFORMATION

WATTS	REPLACES	LUMENS	CCT	DIMMABILITY	PACK SIZE	CASE QTY
8W	60W	800	3000K, 5000K	NO	1	72
14W	100W	1500	3000K, 5000K	NO	1	60
14W	100W	1500	3000K, 5000K	YES*	1	60

*This lamp may not be compatible with all dimmers.

2700K - SOFT WHITE | 3000K - BRIGHT WHITE | 4000K - COOL WHITE | 5000K - DAYLIGHT



1-877-255-0004 | info@greenliteusa.com
www.greenliteusa.com

V1 - 013125

LED Lighting - 9W A19 GU24 60W EQUIVALENT

This dimmable GU24-base light produces 800 lumens using 9 watts of electricity. That's up to 85% less energy use than a 60-watt incandescent bulb. Its 3000K Bright White glow provides warm, inviting light. A 80+ color rendering index makes colors appear more vibrant and skin tones more natural. Also available in 4000K Cool White.

c UL us LISTED

PRODUCT SPECIFICATIONS

Wattage	9W
Incandescent Equivalent	60W
Voltage	120V
Lumens	800
Bulb Shape	Omni
CCT	3000K, 4000K
CRI	80
Base	GU24
UL Fixture Rating	Fully Enclosed
UL Location Rating	Damp
Rate Life Hours	25,000
Dimmable	Yes*
Standard	UL
Warranty	3 Years

DETAILED DIMENSIONS

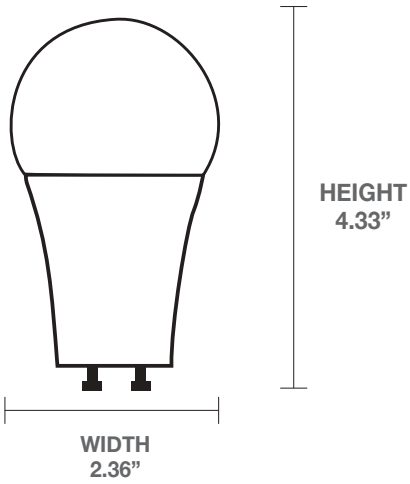

FEATURES





MODEL INFORMATION

MODEL NUMBER	CASE QTY
9W/LED/OMNI/GU24D	48
9W/LED/OMNI/GU24D/40K	48

*This bulb may not be compatible with all dimmers.

1-877-255-0004 | info@greenliteusa.com
www.greenliteusa.com

V1 - 012725

ENERGY STAR PARTNER WOMEN OWNED NMSDC

LED Lighting - ANTIBACTERIAL LED A-TYPE BULB

Greenlite's Antibacterial LED Bulb is an innovative energy-efficient solution that not only illuminates your space but also helps combat germs and odors. Its innovative antibacterial technology features a proprietary nanoscopic coating applied to the lamp's lens or diffuser. When activated by the LED light, this coating neutralizes airborne germs, bacteria, and odors, creating a healthier environment. Kills up to 99% of germs.

c UL us LISTED

PRODUCT SPECIFICATIONS

Wattage	8W
Equivalent	60W
Lumens	800
Lifetime	25,000 hours
Color Temperature	3000K Bright White
Dimmability	Non-dimmable
Base	E26 medium base
Certifications	cULus
UL Location Rating	Damp
Warranty	3 years

DETAILED DIMENSIONS

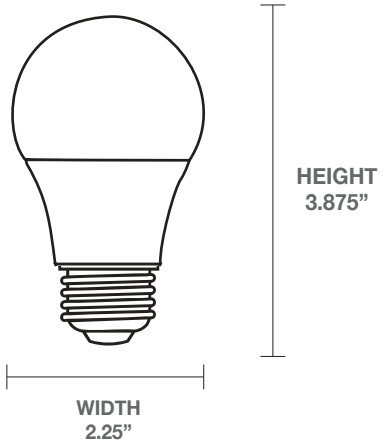



FEATURES

- Powerful antimicrobial coating kills harmful microbes like H1N1, E.Coli, and Staphylococcus
- Harmless to humans, animals, and plants
- Natural air circulation brings the germs and odors in contact with the coating, where they are decomposed and neutralized
- Continuous air purification, decomposition of hazardous gas (e.g. VOC) and odor elimination and neutralization (e.g. Formaldehyde)

MODEL INFORMATION

MODEL NUMBER	PACK SIZE	CASE QTY
8W/A19/30K/ANTB	1	24



1-877-255-0004 | info@greenliteusa.com
www.greenliteusa.com

ENERGY STAR PARTNER WOMEN OWNED NMSDC

V1-012725

LED Lighting - LED SPOTLIGHT

This energy-efficient LED bulb is ideal for all your lighting needs.This bulb is completely dimmable and is perfect for spot lighting, accenting and general room lighting. With a lifetime of 25,000 hours, it reduces the hassle of frequent bulb replacements and saves you money in the long run.

c UL us LISTED

PRODUCT SPECIFICATIONS

Light Source	LED
Rated Voltage	120V
Lifetime	25,000 hours
Bulb Type	Spot Light
Color Temperature	27K/30K/40K/50K
Base	GU5.3 2-Pin
CRI	80
UL Fixture Rating	Enclosed
Shatterproof	Yes
Beam Angle	35°
Dimmability	Yes*
Certifications	cULus, RoHS, FCC
Warranty	3 years

*This lamp may not be compatible with all dimmers.

DETAILED DIMENSIONS

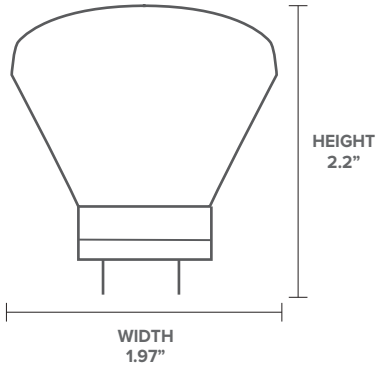



FEATURES

- Approved for fully enclosed fixtures
- Dimmable
- 3 year warranty

MODEL INFORMATION

MODEL	WATTAGE	EQUIVALENT	LUMENS	UL ENVIROMENTAL RATING	CASE QTY
6.5W/MR16/27K	6.5W	50W	520	DAMP	24
6.5W/MR16/30K	6.5W	50W	520	DAMP	24
6.5W/MR16/40K	6.5W	50W	520	DAMP	24
6.5W/MR16/50K	6.5W	50W	520	DAMP	24



1-877-255-0004 | info@greenliteusa.com
www.greenliteusa.com

ENERGY STAR PARTNER WOMEN OWNED NMSDC

V1-012725

LED Lighting - LED SPOTLIGHT

This energy-efficient LED bulb is ideal for all your lighting needs.This bulb is completely dimmable and is perfect for spot lighting, accenting and general room lighting. With a lifetime of 25,000 hours, it reduces the hassle of frequent bulb replacements and saves you money in the long run.

c UL us LISTED

PRODUCT SPECIFICATIONS

Light Source	LED
Rated Voltage	120V
Lifetime	25,000 hours
Bulb Type	Spot Light
Color Temperature	27K/30K/40K/50K
Base	GU10
CRI	80
Shatterproof	Yes
Beam Angle	40°
Dimmability	Yes*
Certifications	cULus, RoHS, FCC
Warranty	3 years

*This lamp may not be compatible with all dimmers.

DETAILED DIMENSIONS

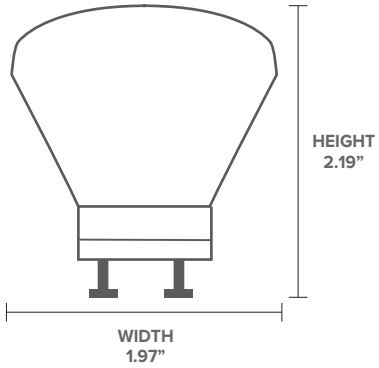



FEATURES

- 25,000 hours
- Dimmable
- 3 year warranty

MODEL INFORMATION

MODEL	WATTAGE	EQUIVALENT	LUMENS	UL ENVIROMENTAL RATING	CASE QTY
6.5W/GU10D/27K	6.5W	50W	500	DAMP	24
6.5W/GU10D/30K	6.5W	50W	500	DAMP	24
6.5W/GU10D/40K	6.5W	50W	500	DAMP	24
6.5W/GU10D/50K	6.5W	50W	500	DAMP	24



1-877-255-0004 | info@greenliteusa.com
www.greenliteusa.com

ENERGY STAR PARTNER WOMEN OWNED NMSDC

V1-012725

LED Lighting - BATTERY BACK-UP EMERGENCY LED LITE

Greenlite's Battery Back-up Emergency Lighting is your ultimate power outage hero! This handy light shines for 3.5 hours on a full charge. Simply screw it into any standard socket for everyday use, and it will automatically turn on during power outages. Whether you're facing a sudden blackout or planning a camping trip, Greenlite's Emergency Lighting ensures you're never left in the dark.

c UL us LISTED

Up to 3.5 Hours of Back-Up Battery Power

PRODUCT SPECIFICATIONS

Wattage	7W
Equivalent	60W
Lumens	600
Lifetime	15,000 hours
Color Temperature	3000K Bright White
Dimmability	Non-dimmable
Base	E26 medium base
Certifications	cULus
UL Location Rating	Damp
Warranty	1 year

DETAILED DIMENSIONS

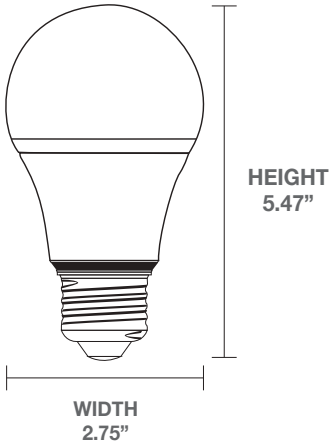





FEATURES

- Rechargeable battery: full charge 3.5 hours
- Hang it anywhere for hands-free illumination
- On/Off Switch: Control your light with ease
- Portable Powerhouse: Take it with you wherever you go

MODEL INFORMATION

MODEL NUMBER	PACK SIZE	CASE QTY
7W/BAT	1	48



1-877-255-0004 | info@greenliteusa.com

www.greenliteusa.com

ENERGY STAR PARTNER

WOMEN OWNED

NMSDC

V1-012725

LED Fixtures - DUSK TO DAWN NITE LITE WITH PLUG

Greenlite's Dusk-to-Dawn LED Nite Lite offers automatic illumination when you need it most — turning on at dusk and off at dawn. Its compact plug-through design ensures you never lose access to an outlet, making it perfect for hallways, bathrooms, kitchens, bedrooms, and stairways. A dependable, energy-efficient solution for everyday comfort and safety.

PRODUCT SPECIFICATIONS

Wattage	0.5W
Lumens	15LM MAX
Lifetime	25,000 hours
Function	Dusk to Dawn with Plug
Color Temperature	3000K
Certifications	ETL/CETL, FCC
Warranty	2 years

DETAILED DIMENSIONS

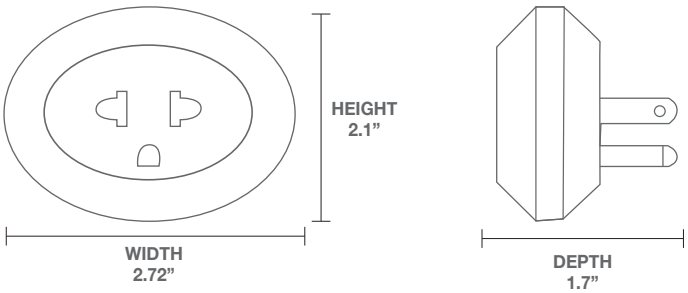

FEATURES



- 3 Functions: Auto / On / Off
- Auto: Turns on at dusk and off at dawn
- On: Light stays on continuously
- Off: Light remains off at all times



MODEL INFORMATION

MODEL NUMBER	PACK SIZE	CASE QTY
NL/OTL/DD	2	48

1-877-255-0004 | info@greenliteusa.com

www.greenliteusa.com

V1-10102025

LED Fixtures - DUSK-TO-DAWN NITE LITE

Automatic light-sensing technology for enhanced safety and convenience. Save energy and enjoy reliable illumination in hallways, stairwells, and more.

PRODUCT SPECIFICATIONS

Wattage	0.3W
Lumens	5LM
Lifetime	25,000 hours
Function	Dusk to Dawn
Color Temperature	3000K
LED Model	2835
Ra/CRI	Ra > 80
Beam Angle	110°
Control	CDS
Material	PC + ABS
Certifications	ETL/CETL, FCC
Warranty	2 years

DETAILED DIMENSIONS

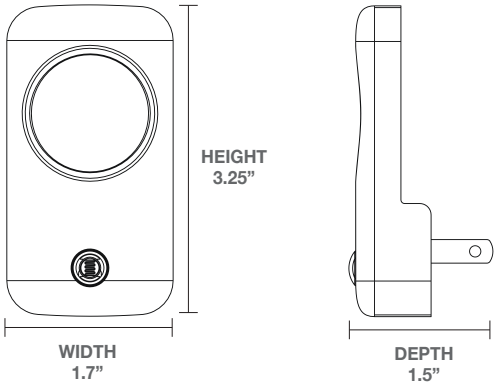



FEATURES

- OFF in the day, ON at night
- Dusk-to-dawn sensor
- Added safety and security
- Cool-to-touch



MODEL INFORMATION

MODEL NUMBER	PACK SIZE	CASE QTY
NLDD/25/2	2	48

1-877-255-0004 | info@greenliteusa.com

www.greenliteusa.com

V1-012325

LED Fixtures - DUSK-TO-DAWN NITE LITE

Automatic light-sensing technology for enhanced safety and convenience. Save energy and enjoy reliable illumination in hallways, stairwells, and more.

PRODUCT SPECIFICATIONS

Wattage	0.3W
Lumens	5LM
Lifetime	25,000 hours
Function	Dusk to Dawn
Color Temperature	3000K
LED Model	2835
Ra/CRI	Ra > 80
Beam Angle	110°
Control	CDS
Material	PC + ABS
Certifications	ETL/CETL
Warranty	2 years

DETAILED DIMENSIONS

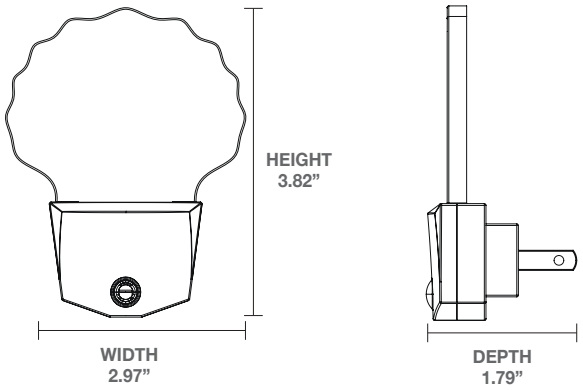

FEATURES



- OFF in the day, ON at night
- Dusk-to-dawn sensor
- Added safety and security
- Cool-to-touch
- Shatterproof lens



MODEL INFORMATION

MODEL NUMBER	PACK SIZE	CASE QTY
NL/ZIGZAG/DD	1	50
NL/ZIGZAG/DD/2	2	48

1-877-255-0004 | info@greenliteusa.com

www.greenliteusa.com

V1-012325

LED Fixtures - MOTION SENSOR NITE LITE

Greenlite's Motion Sensor LED Night Light automatically illuminates in darkness upon motion detection and switches off after 30 seconds of inactivity. Its classic finish complements various decor styles. Ideal for hallways, bathrooms, and any space requiring supplemental lighting.

PRODUCT SPECIFICATIONS

Wattage	0.5W
Lumens	15LM
Lifetime	15,000 hours
Function	Dusk to Dawn
Color Temperature	3000K
Certifications	ETL/CETL, FCC
Warranty	2 years

DETAILED DIMENSIONS

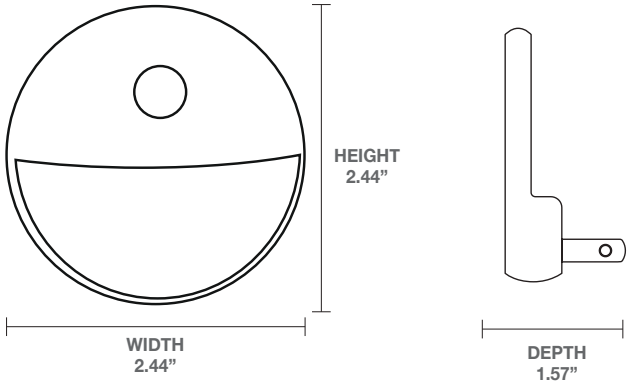

FEATURES

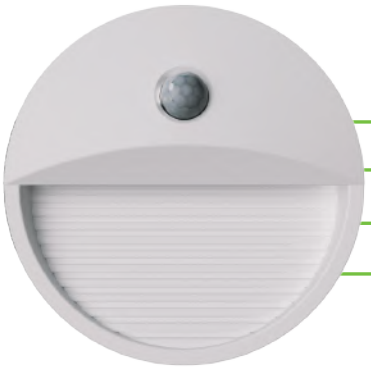

- Auto-On when motion detected
- Auto-Off when no motion detected
- Added safety and security
- Cool-to-touch



MODEL INFORMATION

MODEL NUMBER	PACK SIZE	CASE QTY
NL/MS/2	2	48

1-877-255-0004 | info@greenliteusa.com

www.greenliteusa.com

V1-012325

greenlite™

LED Fixtures - DUSK-TO-DAWN NITE LITE

Automatic light-sensing technology for enhanced safety and convenience. Save energy and enjoy reliable illumination in hallways, stairwells, and more.

Intertek

PRODUCT SPECIFICATIONS

Wattage	0.3W
Lumens	5LM
Lifetime	25,000 hours
Function	Dusk to Dawn
Color Temperature	3000K
LED Model	2835
Ra/CRI	80
Beam Angle	110°
Control	CDS
Material	PC + ABS
Certifications	ETL/CETL
Warranty	2 years

DETAILED DIMENSIONS

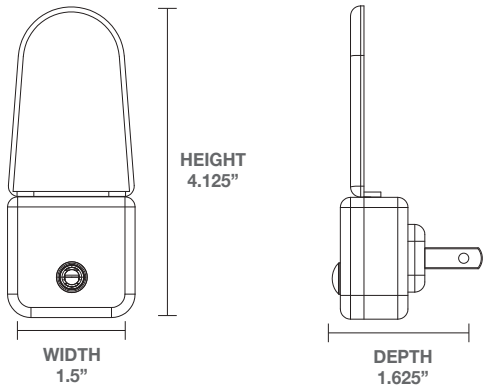



FEATURES

- OFF in the day, ON at night
- Dusk-to-dawn sensor
- Added safety and security
- Cool-to-touch
- Shatterproof lens

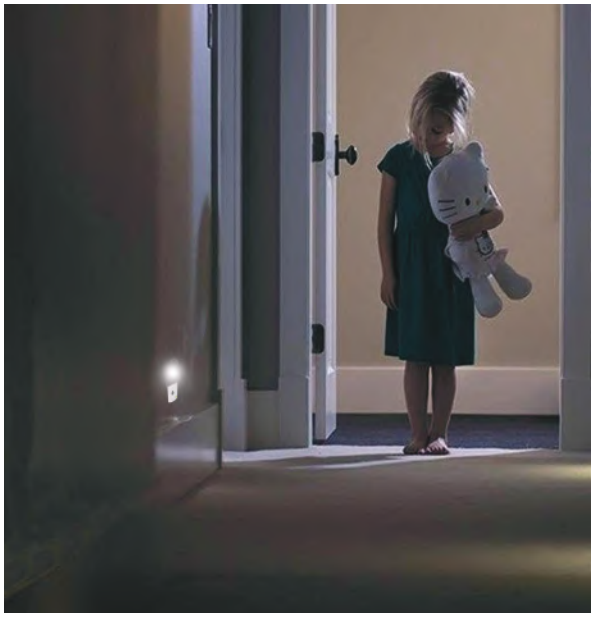

MODEL INFORMATION

MODEL NUMBER	PACK SIZE	CASE QTY
NL/CLEAR/DD	1	50
NL/CLEAR/DD/2	2	48

1-877-255-0004 | info@greenliteusa.com

www.greenliteusa.com

ENERGY STAR PARTNER

WOMEN OWNED

NMSDC

V1-012325

LED Fixtures - DUSK-TO-DAWN NITE LITE

Automatic light-sensing technology for enhanced safety and convenience. Save energy and enjoy reliable illumination in hallways, stairwells, and more.

Intertek

PRODUCT SPECIFICATIONS

Wattage	0.3W
Lumens	2LM
Lifetime	25,000 hours
Function	Dusk to Dawn
Color Temperature	3000K
UL Location Rating	Dry
Certifications	ETL/CETL, FCC
Warranty	2 years

DETAILED DIMENSIONS

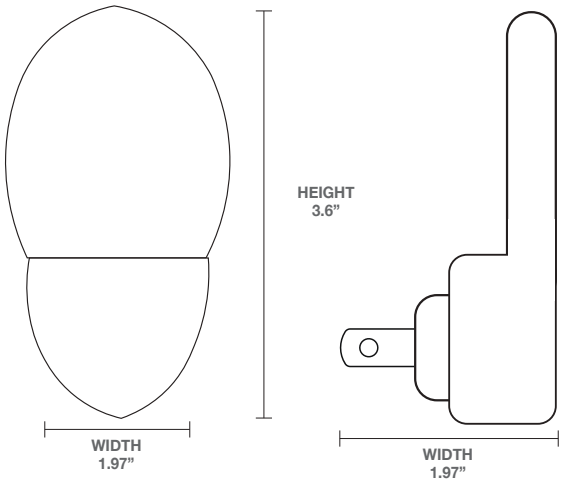



FEATURES

- OFF in the day, ON at night
- Dusk-to-dawn sensor
- Added safety and security
- Cool-to-touch
- Shatterproof lens



MODEL INFORMATION

MODEL NUMBER	PACK SIZE	CASE QTY
NL/LB/DD	1	48
NL/LB/DD/2	2	48

1-877-255-0004 | info@greenliteusa.com

www.greenliteusa.com

ENERGY STAR PARTNER

WOMEN OWNED

NMSDC

LED Fixtures - 3-IN-1 NITE LITE, FLASHLIGHT AND EMERGENCY LIGHT

This 3-in-1 LED light is the perfect solution for lighting your home at night. It features a night light that automatically turns on at dusk and off at dawn, motion sensing that activates upon detecting movement, a safety light that illuminates during power outages, and a flashlight for portable use. Its rectangular design provides a soft, even light, while the integrated LED remains cool to the touch. This energy-efficient choice is ideal for your home.

PRODUCT SPECIFICATIONS

Wattage	1.5W
Lifetime	25,000 hours
Function	Dusk to Dawn
Color Temperature	3000K
Control	CDS
Material	PC + ABS
Certifications	ETL/CETL, FCC
Warranty	2 years

DETAILED DIMENSIONS

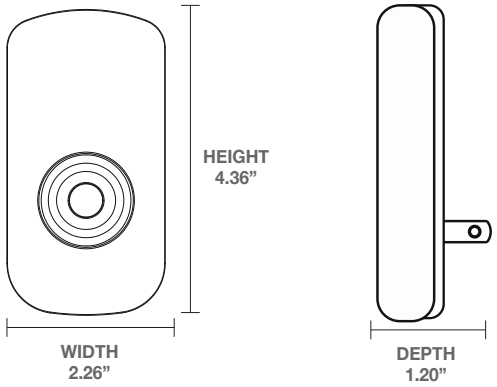

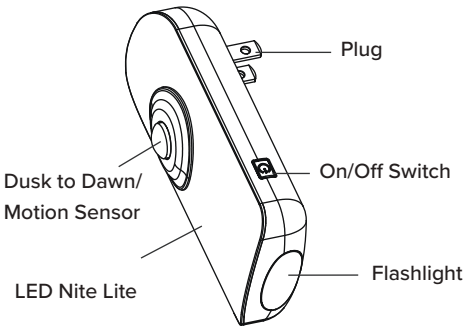



FEATURES

- OFF in the day, ON at night
- Dusk-to-dawn sensor and motion sensor
- Nightlight, flashlight and emergency light
- Rechargeable

MODEL INFORMATION

MODEL NUMBER	PACK SIZE	CASE QTY
NLDD/MS/BAT	1	12



1-877-255-0004 | info@greenliteusa.com
www.greenliteusa.com

V1-012325

LED Fixtures - 3.5W DESK LAMP

Low wattage, energy-saving LED desk lamps. No bulbs required! Flexible neck bends into place and holds for direct light just where you need it. Available in black and moonstruck.

PRODUCT SPECIFICATIONS

Wattage	3.5W
Voltage/Current	120V 60Hz
Lumens	300LM
Lifetime	20,000 hours
Color Temperature	3000K
LED Model	2835
Ra/CRI	80
Power Source	Plug-in
Switch Mechanism	Rocker
Control	Switch ON/OFF
Material	PC, Metal, Silicone Tube
Certifications	ETL
Warranty	2 years

DETAILED DIMENSIONS

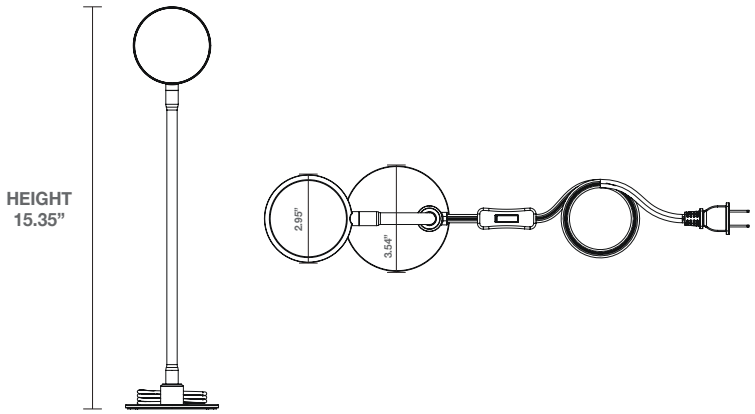

FEATURES



- Integrated LED technology
- Perfect for home offices and work stations
- Sleek & modern design
- Fully assembled

MODEL INFORMATION

MODEL NUMBER	PACK SIZE	CASE QTY
	2	12

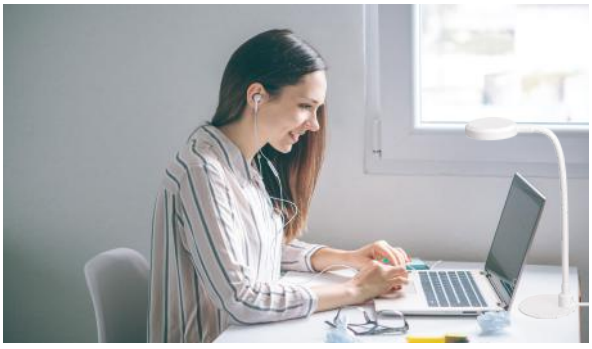

1-877-255-0004 | info@greenliteusa.com

www.greenliteusa.com

LED Lighting - 3.5W DESKLAMP

Low wattage, energy-saving LED desk lamps. No bulbs required! Flexible neck bends into place and holds for direct light just where you need it. Available in white and black.

PRODUCT SPECIFICATIONS

Wattage	3.5W
Voltage/Current	120V 60Hz
Lumens	300LM
Lifetime	30,000 hours
Color Temperature	3000K
Power Source	Plug-in
Control	Switch ON/OFF
Certifications	ETL
Color Availability	White and black
Warranty	3 years

DETAILED DIMENSIONS

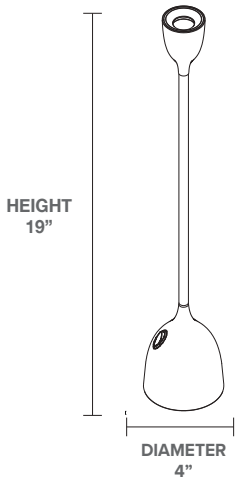





FEATURES

- Integrated LED technology
- Flexible neck
- Sleek & modern design
- Fully assembled



MODEL INFORMATION

MODEL NUMBER	PACK SIZE	CASE QTY
3.5W/DL/W/2	2	12

1-877-255-0004 | info@greenliteusa.com

www.greenliteusa.com

V1-012725

greenlite™

LED Lighting - 10W 6" 5CCT RETROFIT DOWNLIGHT

Greenlite's Retrofit Downlight delivers 950 lumens with 5 selectable color temperatures (2700K–5000K) for the perfect light in any space. ENERGY STAR certified and wet-location rated, it installs easily and offers smooth dimming, lasting up to 50,000 hours.

PRODUCT SPECIFICATIONS

Wattage	10W
Equivalent	65W
Voltage	120V
Lumens	950 LUMENS
Material	Plastic
CCT	5CCT Selectable: 2700K, 3000K, 3500K, 4000K, 5000K
CRI	80
Base	E26
Indoor / Outdoor	Indoor
ETL Location Rating	Wet location application
Rate Life Hours	50,000
Dimmable	Yes (5-100% dimmable)
Certifications	ETL, Energy Star, FCC
Warranty	5 years



FEATURES

- 5 CCT Selectable
- For construction, remodels, and retrofits
- 50,000-hour lifespan
- Indoor use

DETAILED DIMENSIONS

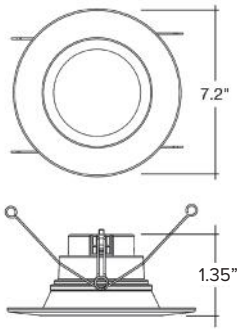

INCLUDES:
2 x Torsion springs
1 x E26 pigtail
2 x long screws for J-box
3 x Wire nuts



MODEL INFORMATION

MODEL NUMBER	CASE QTY
TBD	TBD

*This bulb may not be compatible with all dimmers.

1-877-255-0004 | info@greenliteusa.com
www.greenliteusa.com

V1 - 121725

LED Lighting - 15W HYBRID TYPE A+B T8 LED TUBE

Greenlite's Hybrid T8 LED Tube is an advanced lighting solution designed to work in both ballast-compatible (plug-and-play) and ballast-bypass (direct-wire) modes, offering flexibility and energy efficiency. This hybrid design ensures a smooth transition from fluorescent to LED lighting while maintaining compatibility and performance. Perfect for office buildings, retail spaces, warehouses, schools, healthcare facilities, and government buildings.

PRODUCT SPECIFICATIONS

Wattage	15W
Equivalent	32W
Voltage	120-277V
Lumens	2200
Lifetime	50,000 hours
Color Temperature	4000K Cool White
Driver	UL Type A + B - Direct or Single and Double Ended Bypass
Bulb Shape	T8
Bulb Base	G13
Material	Plastic
Certifications	UL1993, UL1598C, DLC
UL Location Rating	Damp
UL Fixture Rating	Enclosed
Warranty	5 years

DETAILED DIMENSIONS

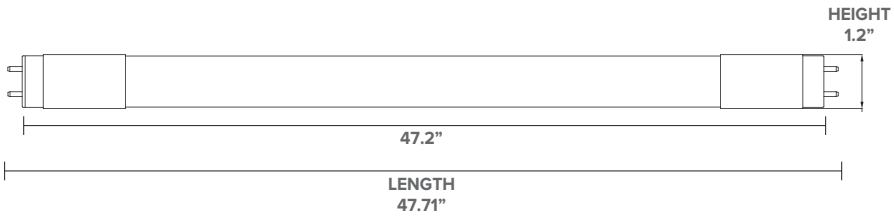

FEATURES

- Replaces fluorescent tubes
- Easy to use
- Long-lasting performance
- Maintenance-free



MODEL INFORMATION

MODEL NUMBER	PACK SIZE	CASE QTY
15W/T8/AB/40K/DE	1	25

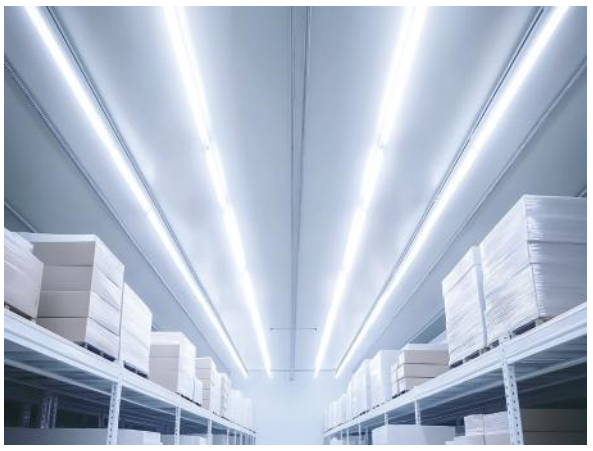

1-877-255-0004 | info@greenliteusa.com

www.greenliteusa.com

V1-060425

LED Lighting - 17W T8 LED TUBE

Greenlite's 17-watt Type B linear T8 LED tubes replace T8 fluorescent tubes. They require direct wiring by bypassing the existing ballast. They are a bright and reliable for many residential or commercial lighting including living rooms, garages, warehouses, offices, etc.

PRODUCT SPECIFICATIONS

Wattage	17W
Equivalent	32W
Voltage	120-277V
Lumens	2200
Lifetime	50,000 hours
Color Temperature	3500K Bright White
Driver	Type B Ballast Bypass Double Ended
Bulb Shape	T8
Bulb Base	G13
Material	Glass cover
Certifications	UL, DLC
UL Location Rating	Damp
UL Fixture Rating	Enclosed
Warranty	5 years

DETAILED DIMENSIONS

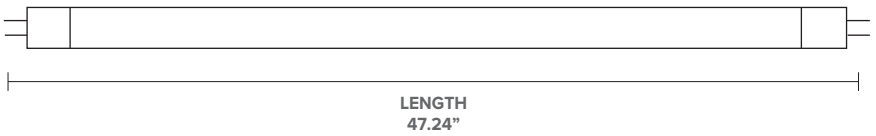



FEATURES

- Replaces fluorescent tubes
- Easy to use
- Long-lasting performance
- Maintenance-free

MODEL INFORMATION

MODEL NUMBER	PACK SIZE	CASE QTY
17W/T8/4B/35K/DE	1	25

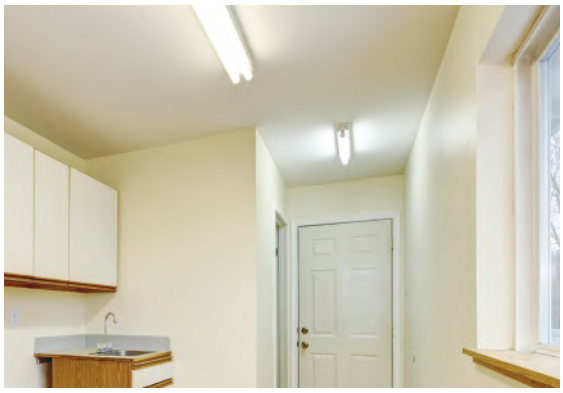

1-877-255-0004 | info@greenliteusa.com

www.greenliteusa.com

V1-012825

LED Lighting - 9W LED MULTI-PURPOSE FIXTURE

Imagine a world where every outlet is a light source! This innovative ceiling fixture transforms your home with an included socket adapter, instantly adding a touch of brightness wherever you need it. The integrated LED ensures long-lasting illumination without the hassle of bulb replacements, making it perfect for both renters and homeowners.

PRODUCT SPECIFICATIONS

Wattage	9W
Voltage/Current	120V 60Hz
Lumens	800
Lifetime	35,000 hours
Color Temperature	3000K Bright White
Dimmability	Non-dimmable
Base	E26 medium base
Certifications	ETL
UL Location Rating	Damp
Warranty	5 years

DETAILED DIMENSIONS

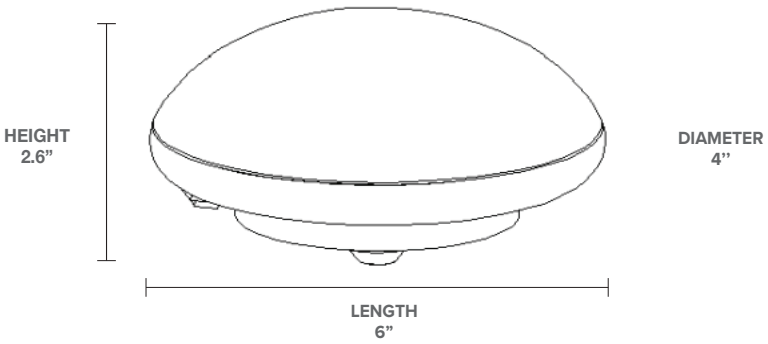

FEATURES



- Integrated LED technology
- Outlet to socket adapter included
- Versatile and easy to use
- On & Off switch

MODEL INFORMATION

MODEL NUMBER	PACK SIZE	CASE QTY
9W/GTW/2	2	48

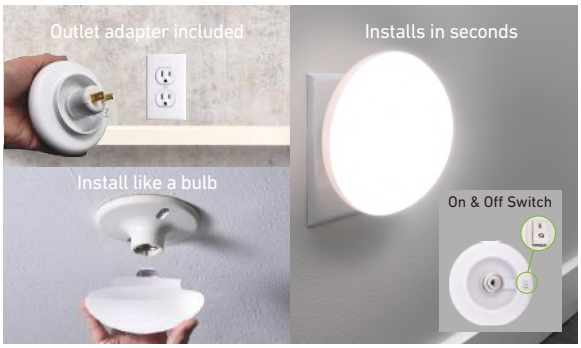

1-877-255-0004 | info@greenliteusa.com
www.greenliteusa.com

LED Lighting -7W LED LINKABLE TASKLITE

Create a bright, energy-efficient workspace with this under cabinet lights. Use this fixture to create a workspace and feel more productive for task lighting or working on projects. Linkable up to 20 units. Perfect for under cabinets, garages, attics, closets, etc. This integrated LED is rated to last 50,000 hours continuous use.

PRODUCT SPECIFICATIONS

Wattage	7W
Voltage/Current	120V 60Hz
Lumens	600
Lifetime	50,000 hours
Color Temperature	4000K Cool White
Power Source	Plug-in
Control	Switch ON/OFF
Certifications	ETL
UL Location Rating	Damp
Warranty	5 years

DETAILED DIMENSIONS

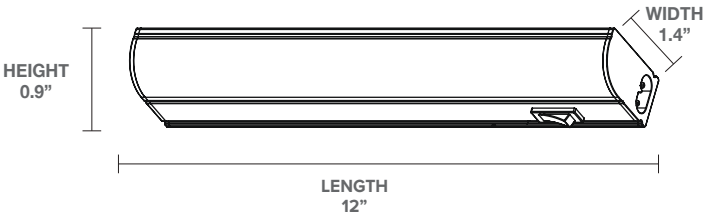



5 ft Cord

FEATURES

- Integrated LED technology
- Mounting and hanging hardware included
- Versatile and easy to use
- Linkable

MODEL INFORMATION

MODEL NUMBER	PACK SIZE	CASE QTY
7W/SHOP/1T/2	2	24



1-877-255-0004 | info@greenliteusa.com

www.greenliteusa.com

V1-012825

greenlite™

LED Lighting - HORTICULTURE LED LIGHT

Elevate your cultivation experience with this complete 720W horticulture light kit! Maximize yields with high-intensity illumination, 0-10V dimming, and easy daisy-chaining. Includes 2 lifting ropes and 2 cable wires for easy installation. Efficient operation, wide temperature range, and a 5-year warranty make this the ultimate grow light investment.

- Explosive Growth: 720W power for maximum yields
- Precision Control: 0-10V dimming for customized light levels
- Effortless Scalability: Daisy-chain multiple units for expanded coverage
- Ultimate Efficiency: High power factor for lower operating costs
- Built to Last: Durable with a 5-year warranty

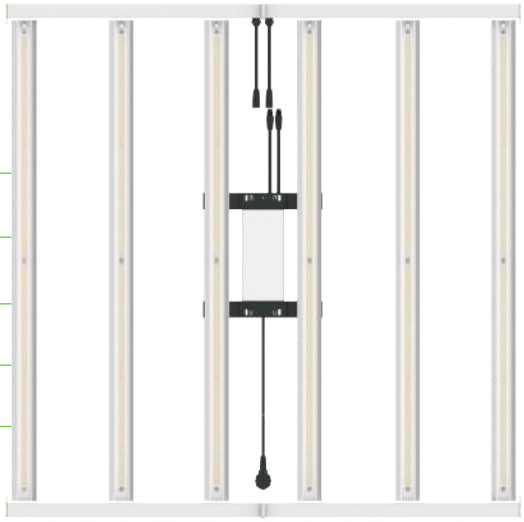

Includes:

- 2 pcs lifting rope
- 2 pcs cable wire
- Connector for daisy chain



1-877-255-0004 | info@greenliteusa.com
www.greenliteusa.com

ENERGY STAR PARTNER · WOMEN OWNED · NMSDC

Achieve Maximum Yields

Precise dimming and full-spectrum output ensure optimal growth for every stage of your plants' development.

PPFD READING
12" Height @ Max. Power

		24″	18″	12″	6″	0″	6″	12″	18″	24″
	24″	686				945				678
	18″		898			1128			889	
	12″			1201		1297		1195		
	6″				1297	1317	1281			
12″	0″	720	940	1152	1312	1352	1307	1148	933	712
	6″				1294	1308	1277			
	12″			1196		1288		1190		
	18″		890			1122			883	
	24″	685				941				670

DETAILED DIMENSIONS

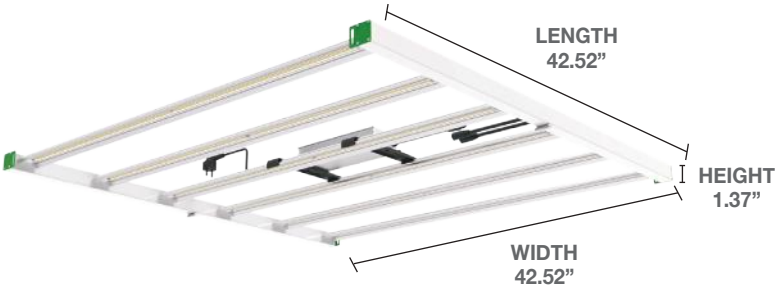

FULL SPECTRUM + IR

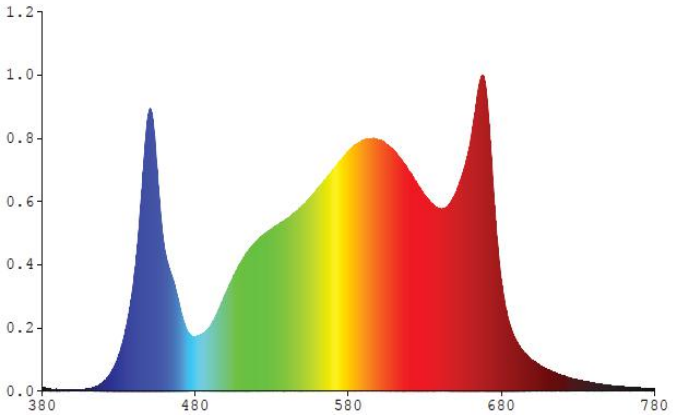

PRODUCT SPECIFICATIONS

Technical Specifications	
Light Source	LED
Spectrum	Full Spectrum + IR
Input Power	720W
Input Voltage	120-277V
PPF	1971 µmol/s @100%
Dimming Control	0-10V Dimming
Daisy Chain Port	RJ-12
Mounting Height	12-24 Inches above canopy
Power Factor	> 0.9
Thermal Management	Passive
Working Temperature	-4°F to 86°F
Diode Lifetime	50000 HOURS
Heatload per fixture	2455 BTU
Dimensions	
Dimensions	42.52” x 42.52” x 1.37” (not including driver)
Warranty	
Warranty	5 years
Certifications & Standards	
Standards	ETL, FCC, DLC - pending , 50 days lead time



1-877-255-0004 | info@greenliteusa.com
www.greenliteusa.com

ENERGY STAR PARTNER
WOMEN OWNED
NMSDC