HANDLES INC.



OVAL MITRED PULL HANDLE (580MM)

TECHNICAL DATA SHEET



OVAL

MITRED PULL HANDLE (580MM)

Overview:
Oval mitred pull handle in brushed stainless steel, satin brass or black. Fits doors up to 100mm thick.

Base Material:
Stainless Steel

Dimensions:
Length: 600mm / CTC: 580mm
Projection: 65mm / Section: 40 × 20mm

Finish:

SKU:
CH162, CH090, CH164



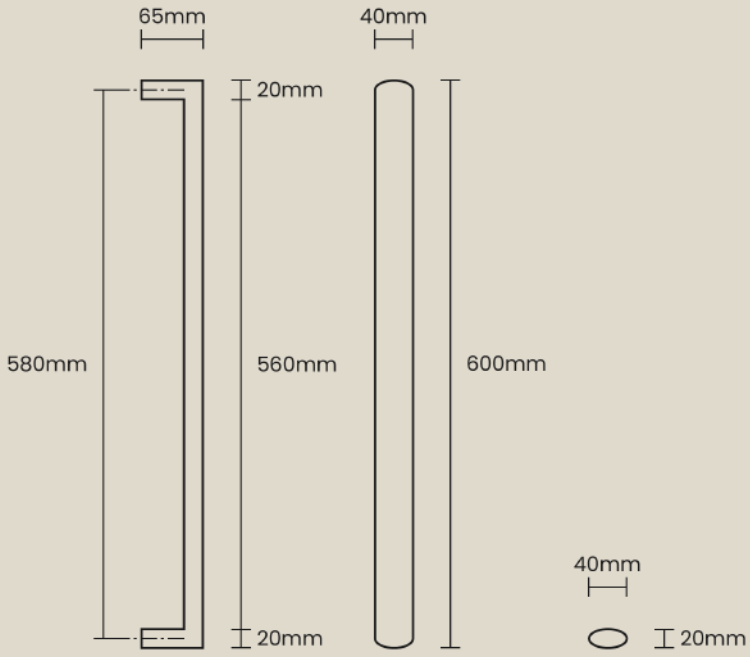

DIMENSIONS