HANDLES INC.



LINES KNOB (21MM)

TECHNICAL DATA SHEET



LINES

CABINET KNOB

Overview:
Discover the bespoke finishing touch for your cabinetry with our 21mm Lines Knob. This knob showcases minimalist design and warmth.

Base Material:
Solid Brass

Dimensions:
Depth: 33mm / Ø: 21mm

Finish:

SKU: CHBK101, CHBK103, CHBK102

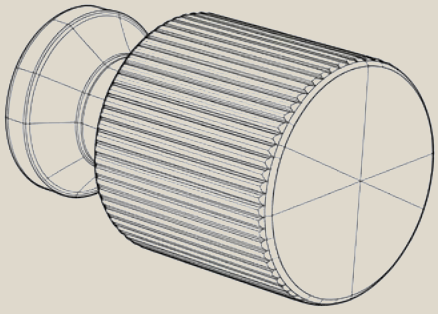

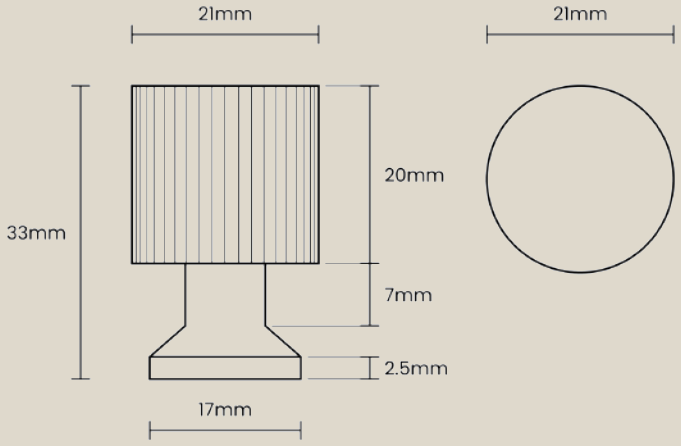

DIMENSIONS