HANDLES INC.



SQUARE MITRED PULL HANDLE (450MM)

TECHNICAL DATA SHEET



SQUARE

MITRED PULL HANDLE (450MM)

Overview:
Square mitred pull handle in brushed stainless steel or satin brass. Fits doors up to 100mm thick.

Base Material:
Stainless Steel

Dimensions:
Length: 470mm / CTC: 450mm
Projection: 64mm / Section: 19 × 19mm

Finish:

SKU: CH020, CH092



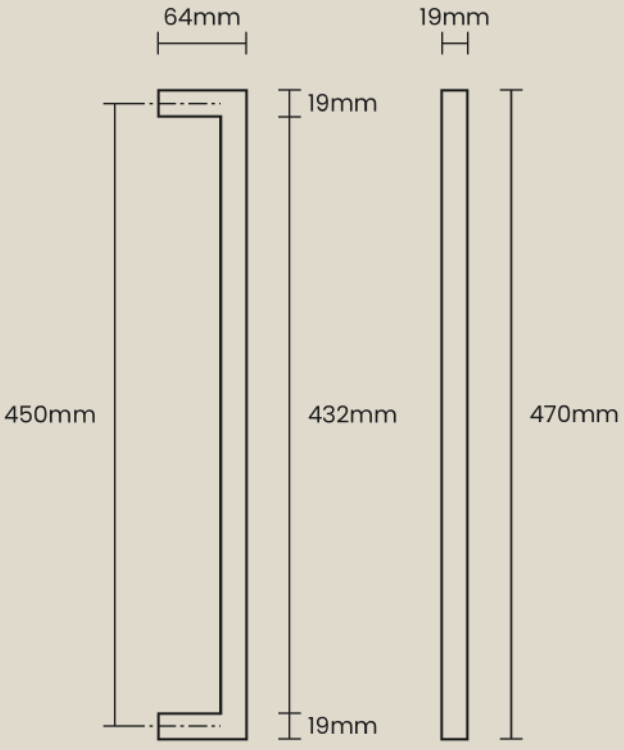

DIMENSIONS