

COOLANT THRU HOLDERS

MITSUBISHI MATERIALS

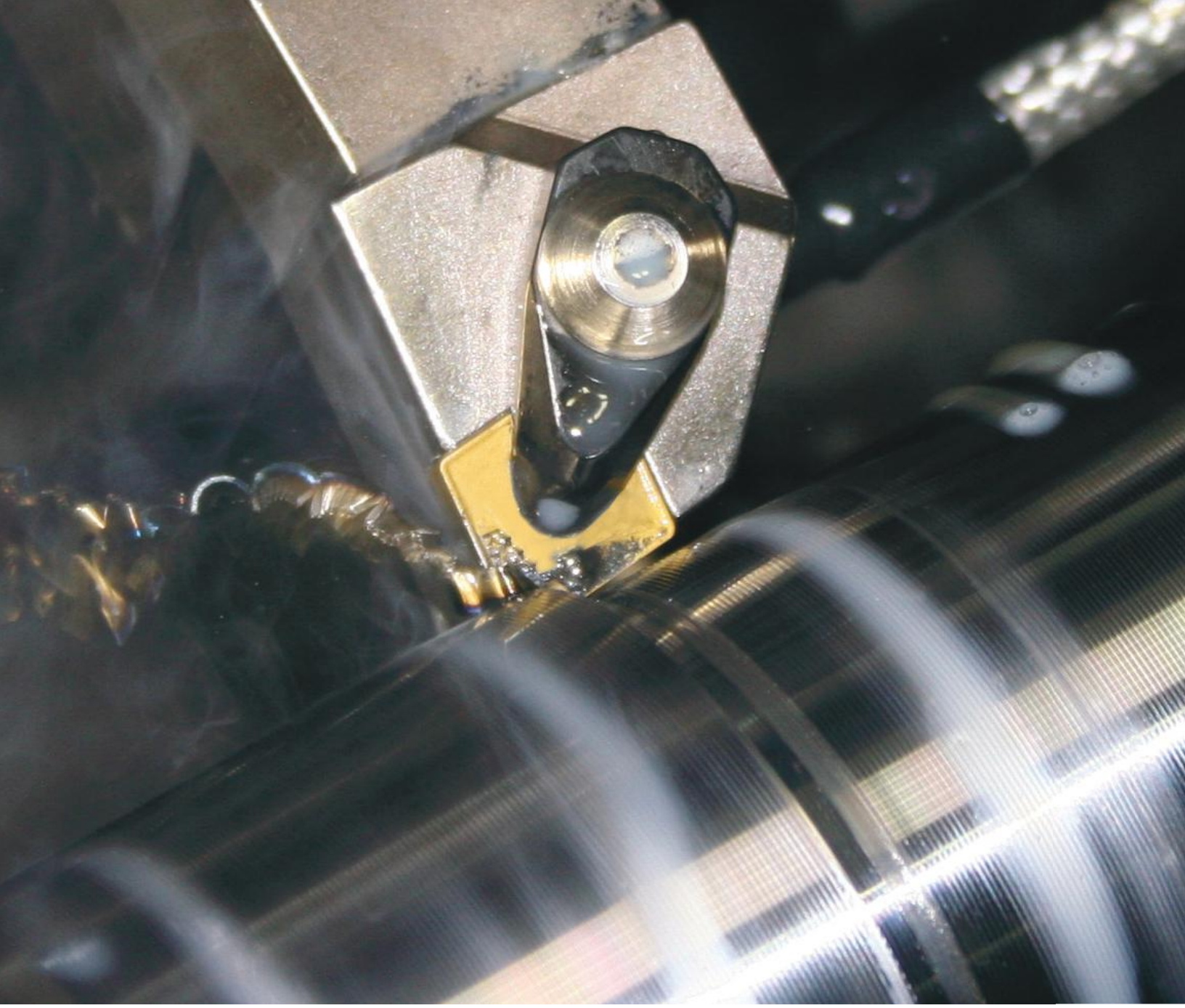

Before Application

Metal chips do not break away at the insert cutting edge.



After Application

Metal Chips are Forced Away from the insert cutting edge.
The insert will operate at a low temperature, with a clean cutting edge, **changing the way material is cut!**

At a range of 1/4" (6mm) the system aims the coolant precisely onto the cutting edge of the insert at a very high velocity.

Increased Metal Removal Rate, Longer Insert Life, Improved Surface Finish and Higher Speeds and Feeds!

The system is designed for use in all turning, boring and threading applications from heavy roughing to high-speed finishing and threading.

The High Pressure Coolant Application Forces the Chips to Hydroplane

away from the cutting edge of the insert, keeping a clean insert surface and a reduced working temperature.



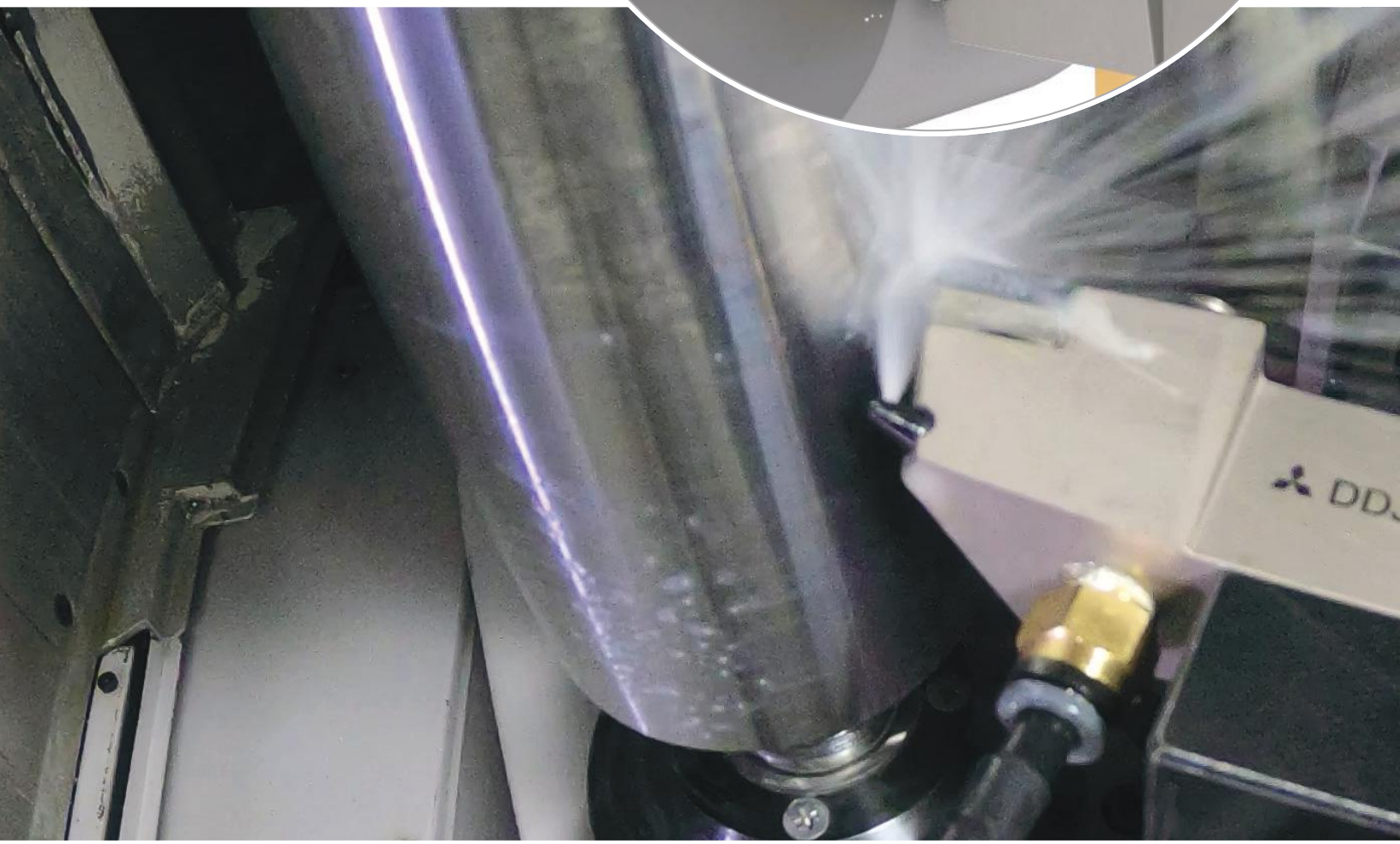

Double Jet Coolant Outlet Thru Coolant Clamp shoots coolant directly over the cutting edge.

Powerful Thru Coolant Clamping System locks and releases the insert quickly and powerfully with the new clamping system.

Thru coolant and locking clamp in one system.

Chromium-Molybdenum Alloy Steel Body high tensile and high yield strength. This material is heat-treated and Electroless Nickel-Coated. Electroless Nickel Coating prevents tools against rust under severe working conditions.

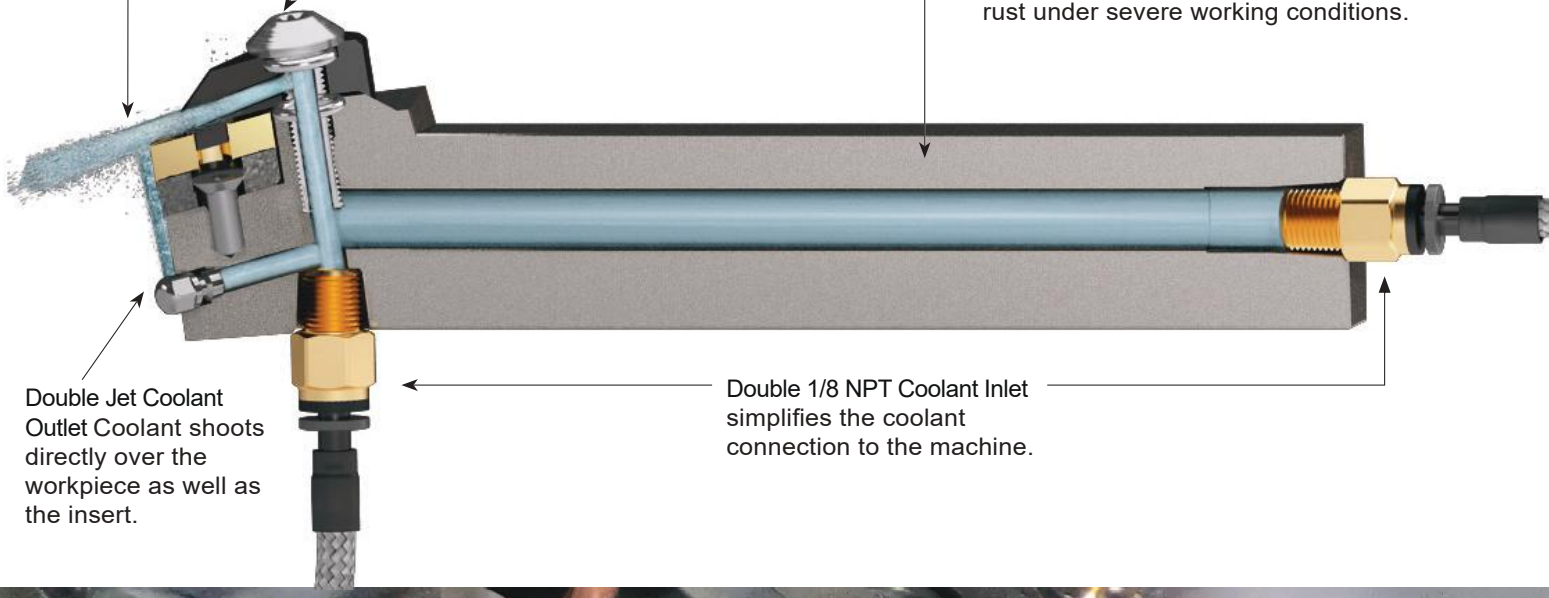

Double Jet Coolant Outlet Coolant shoots directly over the workpiece as well as the insert.

Double 1/8 NPT Coolant Inlet simplifies the coolant connection to the machine.

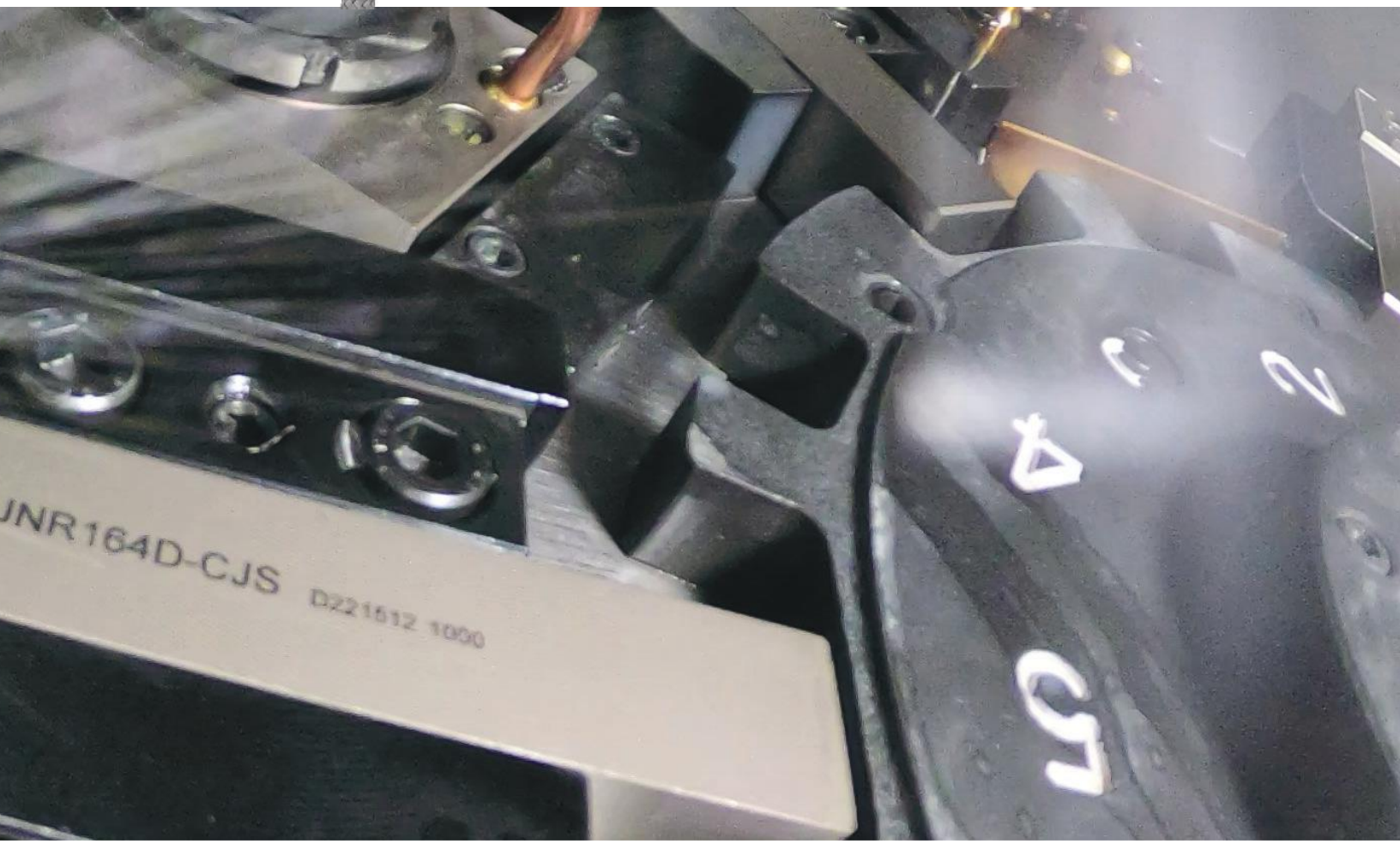



Thru Coolant Clamp
70 - 1400 psi (5 -100 Bar)

- **Enhanced Lubrication at the cutting edge**
- **Enhanced Heat Dissipation at the cutting edge**
- **Low Cutting Edge Temperature**
- **Greater Chip Control and Evacuation**
- **Improved Chip Breaking at High Pressures**
- **Smooth Cutting Action and Surface Finish**
- **Increased Speeds and Feeds**
- **Increased Metal Removal Rates and Productivity**

Supplied Standard with all Tools
Thru Coolant Clamp Style JSLC-HP
Operates at a Maximum of 1400 psi (100 Bar)

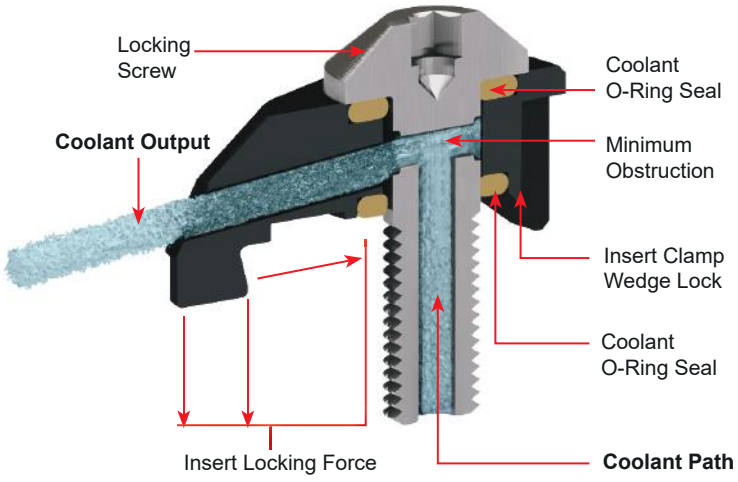

- Locks and cools the insert in one action
- Aimes the coolant to the cutting edge
- Aimes the coolant underneeth the chip

Sold Separately to Deliver High Coolant Volume
for Applications above 1000 psi
High Volume Thru Coolant Clamp Style JSLC-HPV
Operates at a Maximum of 1400 psi (100 Bar)

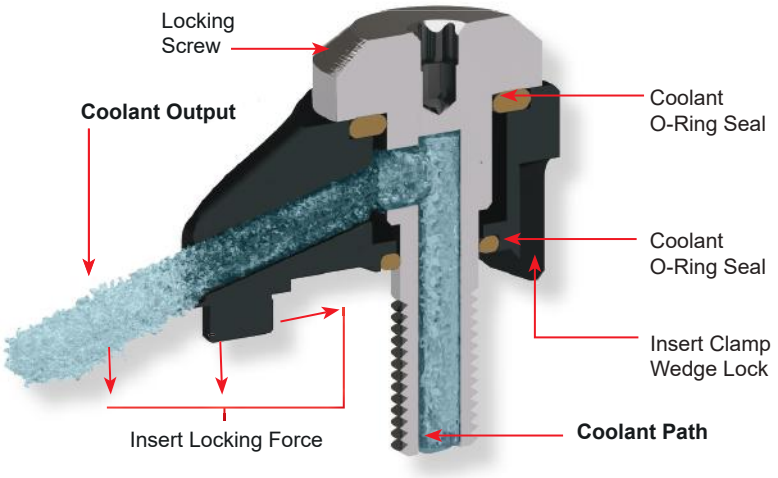

Maximum performance will be achieved
at 1000 psi and above with a coolant volume of ½ gpm
(gallon per minute) per machine horsepower.

The High force coolant breaks chips and keeps them away from the tool.

High force coolant (pressure and volume) prevents Vapor Barrier: Properly applied high pressure and high volume coolant prevents vapor barrier from forming by removing the energy created in the turning process and creating a region of high pressure which raises the boiling point of the coolant. So much liquid is forced into the cutting zone that heat is removed and no vapor can form because of the pressurization. A great deal of **FORCE** is required to achieve this pressurization. This liquid has the added benefit of providing lubrication and flushes chips away from the cut.
There is a great deal of discussion about pressure, which is meaningless without volume.

Force requires both mass and velocity, and the coolant must, be focused at the chip tool interface.

When you combine the high force coolant tools with a high pressure pump you gain real control of your process, damage from heat and chips is eliminated and tools can cut until they wear out. Controlled high-pressure coolant keeps the temperature low; changing the way metal is cut. Tools last longer, chips can't weld to the insert and metal can be cut at much higher surface speeds than ever before. Decomposition of the chemicals mixed in coolants may not occur at low temperatures. Combining a properly designed high pressure and high volume pumping system and the tooling system allows surface speed to be increased a minimum of 30%, with some operations improving by 300%.
High-pressure coolant also provides lubricity by blasting lubricating fluid between the chip and the insert at hundreds of miles per hour. This increased lubricity combined with a much lower temperature and the ejection of cut material often results surface finish to measure twice as good as can be achieved by traditional methods.

Short chips with high pressure

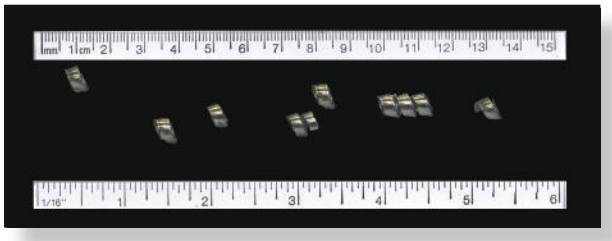

High Pressure

High Pressure and volume directed into the chip-tool interface never lets the temperature get out of control. The shear zone is short and the chips break over the base material.

Long chips made with low pressure

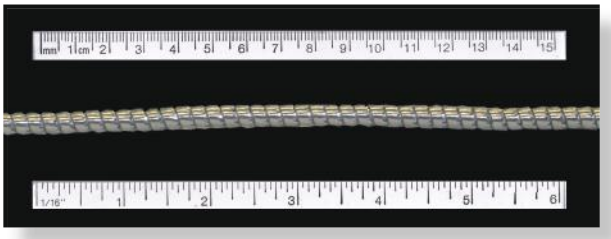

Standard Pressure

Low-pressure coolant allows a long shear zone that does not break chips in many materials. The result is long uncontrollable chips.

Chips cause unpredictable damage. In general, the longer the chips, the harder it is to control and the more damage they cause. Long stringy chips wrap around boring bars, fill the bottoms of holes, catch on the chucks, cause mechanical problems with loaders, and in many cases require manual removal. All of these slow down the production process and reduces productivity. Broken chips that can fall away, or that can be blown out of the cutting zone with coolant force and away from the part and tool are always more desirable for a predicted performance.

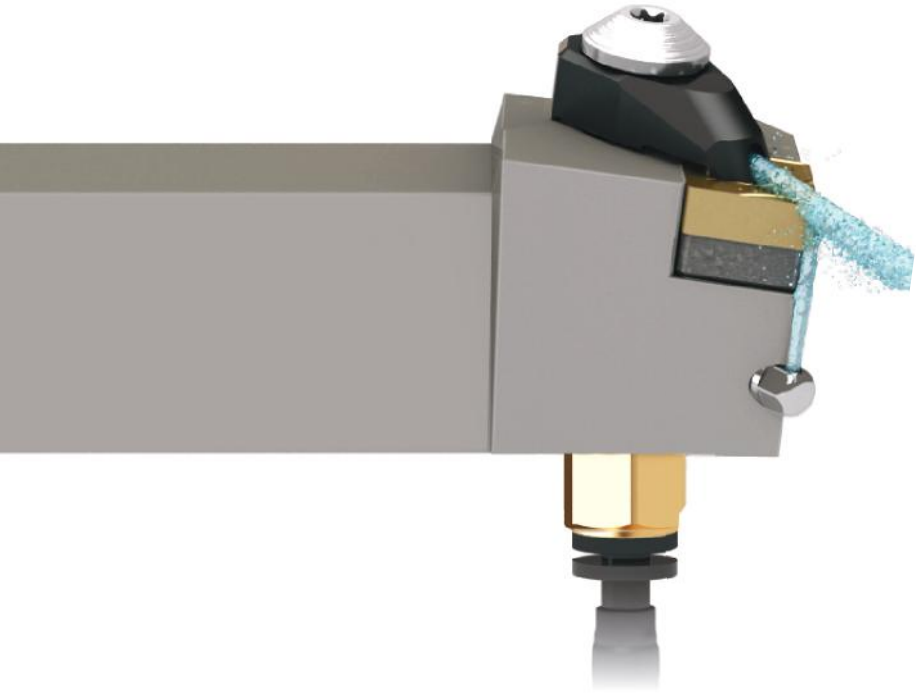

70-1400 psi (5-100 Bar) Double Jet Coolant System

- Designed with the coolant exit in 2 outlets, above and below the insert cutting edge.
- With the Thru Coolant Clamp Located above the insert cutting edge, the coolant is injected precisely between the cutting edge of the insert and the chip.
- Below the insert cutting edge, the coolant is injected under the insert cutting edge and the workpiece surface.
- The combination of the 2 Coolant Outlets Reduces the friction on the insert cutting edge and keeps it clean at a constant temperature, reducing edge wear and chipping.
- Consequently, the surface finish, work quality and tolerances are improved and the life of the insert is extended up to 200% over the conventional coolant system.



Heat and Machining!

Heat that is allowed to accumulate can be very detrimental to tooling, as well as to the surface of the work piece. The nice blue color in a chip means that the metal has seen very high temperatures. Most steels need to get to a temperature of at least 800° F to acquire an obvious blue oxide surface and the temperature at the tip of the cutting tool can often be over twice as hot. At these temperatures coolant is completely vaporized before it can reach the cutting zone.

Heat can be removed by simply pouring the coolant over the tool as it cuts. This is referred to as **'FLOOD'** cooling, and has been the standard method for years. The coolant picks up heat as it washes over the area. A problem is that, even with the best operators, the coolant line is rarely aimed at the critical point. Even with the most careful coolant application, however, at the high performance levels available with modern machine tools, so much heat is generated that the coolant is heated to beyond its boiling point. A blanket of vapor forms over the very area we're trying to cool, insulating it from the coolant. The only way heat can be drawn out of the area is by radiating it through the vapor blanket, and by conduction back through the tool. Either way, only a fraction of the heat-carrying capacity of the coolant is being used.

High pressure double jet cooling in high volume, allows the coolant to be introduced in such a way as to remove the heat at a high enough rate and pressure to eliminate the vapor barrier. This allows a direct heat transfer from the mass of the insert to the mass of the coolant. The temperature of the tool, in some cases, is only slightly above the temperature of the coolant.

Tooling uses a coolant through locking clamp which is precisely aimed to insert high pressure, high velocity coolant into exactly the spot where the heat is generated.

Improved Productivity (70 psi):

The Thru Coolant System will immediately improve machine performance with higher cutting speed resulting in extended tool life, closer tolerances, and improvement of surface finish. It makes machining easy for materials ranging from low carbon steel to stainless steels and high temperature alloys, and aerospace materials.

How to Optimize Productivity (1000 psi)

A minimum of 70 psi / 5 Bar is required for the to show improvements in machining performance. To reach optimum results, higher coolant pressure and volume are necessary. Maximum performance will be achieved at 1000 psi with a coolant volume of ½ gpm (gallon per minute) per machine horsepower. Example: A 15 HP machine will need a coolant pump of 1000 psi with 7.5 gpm of coolant volume.

A.N.S.I. (American National Standards Institute)
DCLNR-16-4D-CJS

I.S.O. (International Standards Organization)
DCLNR-2020-K12-CJS

Turning Identification System

Thru Coolant Clamp



C - 80° Rhombic



S - Square



D - 55° Rhombic



T - Triangle



R - Round



W - 80° Trigon



V - 35° Rhombic



N - 0° Negative



R - Right Hand

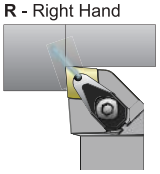

L - Left Hand

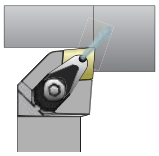

N - Neutral

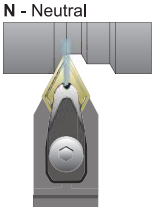

① Clamp Style	② Insert Shape	④ Insert Clearance Angle	⑤ Hand of Tool

①	②	③	④	⑤
D	C	L	N	R/L-

③ Tool Style

D - Straight Shank
45° Side Cutting Edge Angle

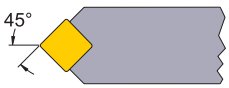

J - Offset Shank
3° Side Cutting Edge Angle

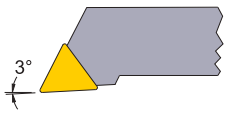

P - Straight Shank
27.5° Side Cutting Edge Angle

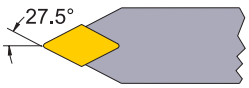

E - Straight Shank
30° Side Cutting Edge Angle

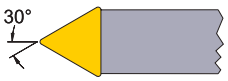

K - Offset Shank
15° End Cutting Edge Angle

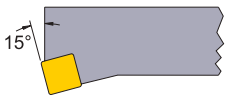

R - Offset Shank
15° Side Cutting Edge Angle

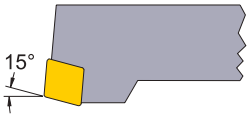

G - Offset Shank
0° Side Cutting Edge Angle

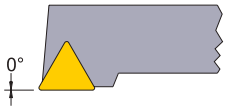

L - Offset Shank
5° Edge Angle

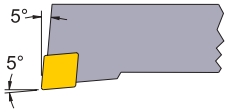

V - Straight Shank
17.5° Side Cutting Edge Angle

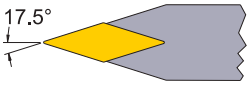

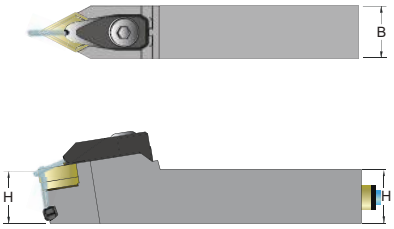

(H) & (B) shown in 1/16" increments

EX: 16 units (16 x 1/16") =1"square

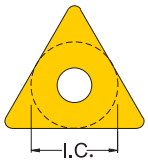

Shown in 1/8″ increments Insert Size I.C.

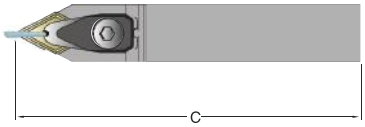

B - 4.5″
C - 5.0″
D - 6.0″
E - 7.0″

⑥ Shank Size	⑦ Insert Size I.C.	⑧ Tool Length

⑥	⑦	⑧		⑨
16	4	D	CJS	

⑥ Tool Size [Height (H) and Width (B)] (inch)				
	12	16	20	24
H	.750	1.000	1.250	1.500
B	.750	1.000	1.250	1.500

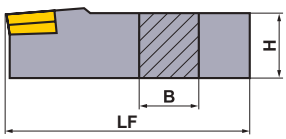

In case of B=H, the number will represent the number of sixteeths of B and H.
In case of B≠H, the first digit represents the number of eighths of B, and the second digit represents the number of quarters of H.

⑦ Insert Size				
Inscribed Circle of Insert (inch)	.375	.500	.625	.750
T	3	4		
S R		4	5	6
W	3	4		
80° C		4	5	6
55° D	3	4		
35° V	3			

⑨ Coolant Thru

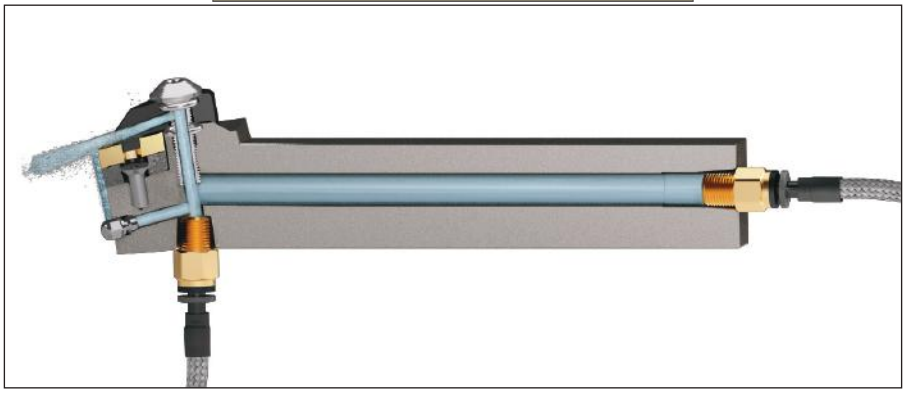

DCLN R/L-CJS Tool holder Style L - 5º end or side cutting lead angle for negative 80º diamond CNM_inserts

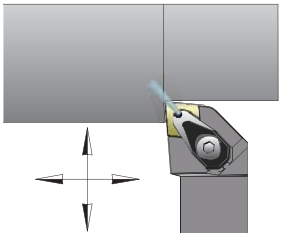

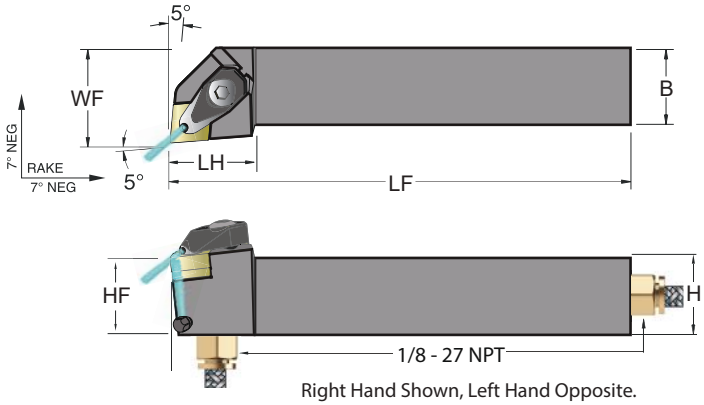

Right Hand Shown, Left Hand Opposite.



One standard coolant connector kit with 12" tubing is supplied

Order Number	Stock		Insert Number		Dimensions (inch)						Seat	Seat Screw	Thru Coolant Clamp Bridge	Clamp Screw	Upper 'O' Ring	Lower 'O' Ring	Underport Nozzle	Underport Seal Ring	1/8 NPT Plug	Coolant Connection Kit	Torx Wrench
	R	L			H	B	LF	LH	HF	WF											
DCLNR/L124B-CJS	●	●	CNMA CNMG CNMM CNGA CNGG CNGM	43°	.750	.750	4.500	1.250	.750	1.000	JC-432	SM-M4-6	JSLC-HPCTW-4N	JSCS-04	JSOR-01	JSOR-04	JSBP-M4-240	JSBPS-M4	JSNP-T125	JSPLPCK-125-250	T-20
DCLNR/L164D-CJS	●	●		43°	1.000	1.000	6.000	1.250	1.000	1.250	JC-432	SM-M4-6	JSLC-HPCTW-4N	JSCS-04	JSOR-01	JSOR-04	JSBP-M4-240	JSBPS-M4	JSNP-T125	JSPLPCK-125-250	T-20
DCLNR/L165D-CJS	●	●		54°	1.000	1.000	6.000	1.375	1.000	1.250	JC-533	SM-M6	JSLC-HPC5	JSCS-04	JSOR-01	JSOR-04	JSBP-M4-240	JSBPS-M4	JSNP-T125	JSPLPCK-125-250	T-20
DCLNR/L204D-CJS	●	●		43°	1.250	1.250	6.000	1.250	1.250	1.500	JC-432	SM-M4-6	JSLC-HPCTW-4N	JSCS-04	JSOR-01	JSOR-04	JSBP-M4-240	JSBPS-M4	JSNP-T125	JSPLPCK-125-250	T-20
DCLNR/L205D-CJS	●	□		54°	1.250	1.250	6.000	1.375	1.250	1.500	JC-533	SM-M6	JSLC-HPC5	JSCS-04	JSOR-01	JSOR-04	JSBP-M4-240	JSBPS-M4	JSNP-T125	JSPLPCK-125-250	T-20
DCLNR/L206E-CJS	□	□		64°	1.250	1.250	7.000	1.550	1.250	1.550	JC-633	SM-M6	JSLC-HPC6	JSCS-06	JSOR-01	JSOR-202	JSBP-M4-240	JSBPS-M4	JSNP-T125	JSPLPCK-125-250	T-20
DCLNR/L244E-CJS	●	□		43°	1.500	1.500	7.000	1.250	1.500	2.000	JC-432	SM-M4-6	JSLC-HPCTW-4N	JSCS-04	JSOR-01	JSOR-04	JSBP-M4-240	JSBPS-M4	JSNP-T125	JSPLPCK-125-250	T-20
DCLNR/L245E-CJS	□	□		54°	1.500	1.500	7.000	1.500	1.500	2.000	JC-533	SM-M6	JSLC-HPC5	JSCS-04	JSOR-01	JSOR-04	JSBP-M4-240	JSBPS-M4	JSNP-T125	JSPLPCK-125-250	T-20
DCLNR/L246E-CJS	□	□		64°	1.500	1.500	7.000	1.550	1.500	2.000	JC-633	SM-M6	JSLC-HPC6	JSCS-06	JSOR-01	JSOR-202	JSBP-M4-240	JSBPS-M4	JSNP-T125	JSPLPCK-125-250	T-20

One standard coolant connector kit with tubing is supplied, see page 19 for details and high pressure coolant fitting. For spare parts see page 20.

DCKN R/L-CJS Tool holder Style K - 15º Front cutting lead angle for negative 80º diamond CNM_inserts

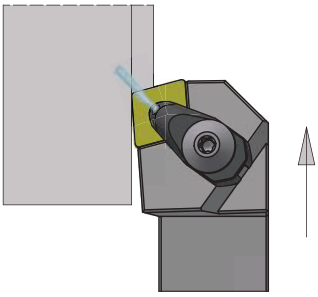

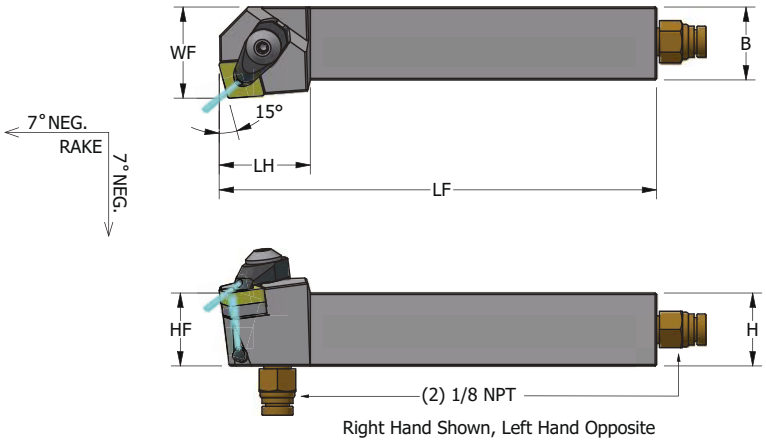

Right Hand Shown, Left Hand Opposite



One standard coolant connector kit with 12" tubing is supplied

Order Number	Stock		Insert Number		Dimensions (inch)						Seat	Seat Screw	Thru Coolant Clamp Bridge	Clamp Screw	Upper 'O' Ring	Lower 'O' Ring	Underport Nozzle	Underport Seal Ring	1/8 NPT Plug	Coolant Connection Kit	Torx Wrench
	R	L			H	B	LF	LH	HF	WF											
DCKNR/L124B-CJS	□	□	CNMA CNMG CNMM CNGA CNGG CNGM	43°	.750	.750	4.500	1.250	.750	1.125	JC-432	SM-M4-6	JSLC-HPCTW-4N	JSCS-04	JSOR-01	JSOR-04	JSBP-M4-190	JSBPS-M4	JSNP-T125	JSPLPCK-125-250	T-20
DCKNR/L164D-CJS	●	□		43°	1.000	1.000	6.000	1.250	1.000	1.250	JC-432	SM-M4-6	JSLC-HPCTW-4N	JSCS-04	JSOR-01	JSOR-04	JSBP-M4-240	JSBPS-M4	JSNP-T125	JSPLPCK-125-250	T-20
DCKNR/L204D-CJS	□	□		43°	1.250	1.250	6.000	1.250	1.250	1.500	JC-432	SM-M4-6	JSLC-HPCTW-4N	JSCS-04	JSOR-01	JSOR-04	JSBP-M4-240	JSBPS-M4	JSNP-T125	JSPLPCK-125-250	T-20

One standard coolant connector kit with tubing is supplied, see page 19 for details and high pressure coolant fitting. For spare parts see page 20.

● □ = NEW

● : USA Stock

DCRN R/L-CJS Tool holder Style R - 15º Side cutting lead angle for negative 80º diamond CNM_inserts

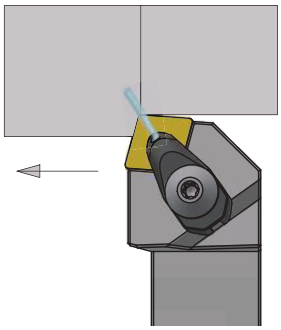

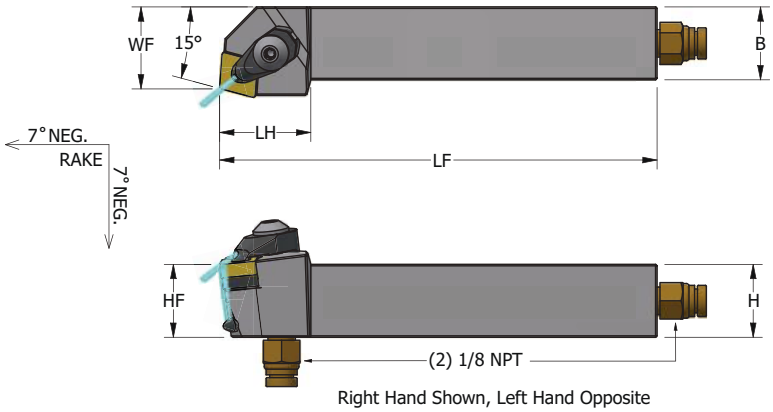

Right Hand Shown, Left Hand Opposite

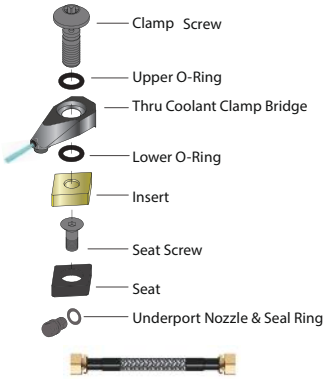

One standard coolant connector kit with 12" tubing is supplied

Order Number	Stock R	Stock L	Insert Number		Dimensions (inch) H	B	LF	LH	HF	WF	Seat	Seat Screw	Thru Coolant Clamp Bridge	Clamp Screw	Upper 'O' Ring	Lower 'O' Ring	Underport Nozzle	Underport Seal Ring	1/8 NPT Plug	Coolant Connection Kit	Torx Wrench
DCRNR/L124B-CJS	□	□	CNMA CNMG CNMM CNGA CNGG CNGM	43○	.750	.750	4.500	1.250	.750	.875	JC-432	SM-M4-6	JSLC-HPCTW-4N	JSCS-04	JSOR-01	JSOR-04	JSBP-M4-190	JSBPS-M4	JSNP-T125	JSPLPCK-125-250	T-20
DCRNR/L164D-CJS	□	□		43○	1.000	1.000	6.000	1.250	1.000	1.125	JC-432	SM-M4-6	JSLC-HPCTW-4N	JSCS-04	JSOR-01	JSOR-04	JSBP-M4-240	JSBPS-M4	JSNP-T125	JSPLPCK-125-250	T-20
DCRNR/L204D-CJS	□	□		43○	1.250	1.250	6.000	1.250	1.250	1.375	JC-432	SM-M4-6	JSLC-HPCTW-4N	JSCS-04	JSOR-01	JSOR-04	JSBP-M4-240	JSBPS-M4	JSNP-T125	JSPLPCK-125-250	T-20
DCRNR/L165D-CJS	□	□		54○	1.000	1.000	6.000	1.375	1.000	1.075	JC-533	SM-M6	JSLC-HPC5	JSCS-04	JSOR-01	JSOR-04	JSBP-M4-190	JSBPS-M4	JSNP-T125	JSPLPCK-125-250	T-20
DCRNR/L205D-CJS	□	●		54○	1.250	1.250	6.000	1.375	1.250	1.325	JC-533	SM-M6	JSLC-HPC5	JSCS-04	JSOR-01	JSOR-04	JSBP-M4-240	JSBPS-M4	JSNP-T125	JSPLPCK-125-250	T-20
DCRNR/L206D-CJS	□	□		64○	1.250	1.250	6.000	1.750	1.250	1.315	JC-633	SM-M6	JSLC-HPC6	JSCS-06	JSOR-01	JSOR-202	JSBP-M4-240	JSBPS-M4	JSNP-T125	JSPLPCK-125-250	5mm Hex

One standard coolant connector kit with tubing is supplied, see page 19 for details and high pressure coolant fitting. For spare parts see page 20.

DDJN R/L-CJS Tool holder Style J - 3º side cutting lead angle for negative 55º diamond DNM_inserts

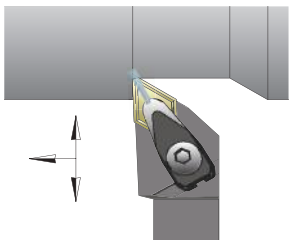

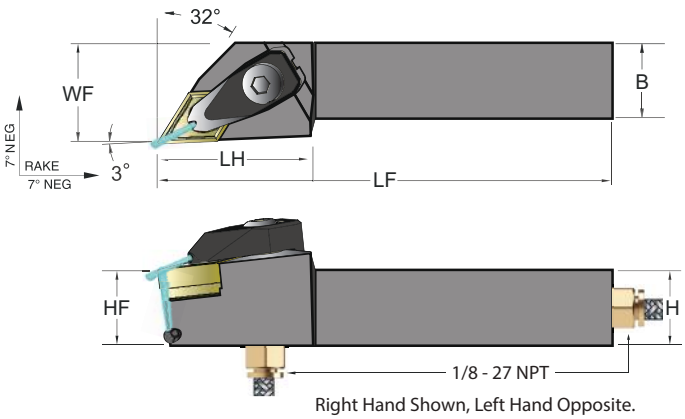

Right Hand Shown, Left Hand Opposite.

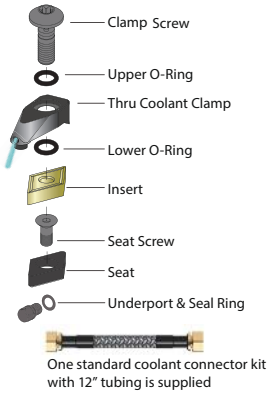

One standard coolant connector kit with 12" tubing is supplied

Order Number	Stock R	Stock L	Insert Number		Dimensions (inch) H	B	LF	LH	HF	WF	Seat	Seat Screw	Thru Coolant Clamp Bridge	Clamp Screw	Upper 'O' Ring	Lower 'O' Ring	Underport Nozzle	Underport Seal Ring	1/8 NPT Plug	Coolant Connection Kit	Torx Wrench
DDJNR/L123B-CJS	●	●	DNMA DNMG DNMM DNGA DNGG DNGM	33○	.750	.750	4.500	1.500	.750	1.000	SM-M3	SM-M4-245	JSLC-HPD3	JSCS-04	JSOR-01	JSOR-04	JSBP-M4-240	JSBPS-M4	JSNP-T125	JSPLPCK-125-250	T-20
DDJNR/L124B-CJS	●	●		43○	.750	.750	4.500	1.500	.750	1.000	JD-432	SM-M4-6	JSLC-HPD4	JSCS-04	JSOR-01	JSOR-04	JSBP-M4-240	JSBPS-M4	JSNP-T125	JSPLPCK-125-250	T-20
DDJNR/L164D-CJS	●	●		43○	1.000	1.000	6.000	1.500	1.000	1.250	JD-432	SM-M4-6	JSLC-HPD4	JSCS-04	JSOR-01	JSOR-04	JSBP-M4-365	JSBPS-M4	JSNP-T125	JSPLPCK-125-250	T-20
DDJNR/L204D-CJS	●	●		43○	1.250	1.250	6.000	1.500	1.250	1.500	JD-432	SM-M4-6	JSLC-HPD4	JSCS-04	JSOR-01	JSOR-04	JSBP-M4-365	JSBPS-M4	JSNP-T125	JSPLPCK-125-250	T-20
DDJNR/L244E-CJS	□	□		43○	1.500	1.500	7.000	1.500	1.500	2.000	JD-432	SM-M4-6	JSLC-HPD4	JSCS-04	JSOR-01	JSOR-04	JSBP-M4-365	JSBPS-M4	JSNP-T125	JSPLPCK-125-250	T-20

One standard coolant connector kit with tubing is supplied, see page 19 for details and high pressure coolant fitting. For spare parts see page 20.

● □ = NEW

● : USA Stock

DDPNN-CJS Tool holder Style P - 27.5º side cutting lead angle for negative 55º diamond DNM_inserts

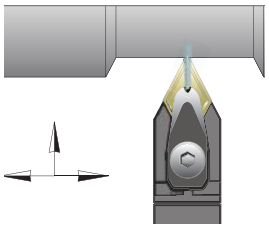

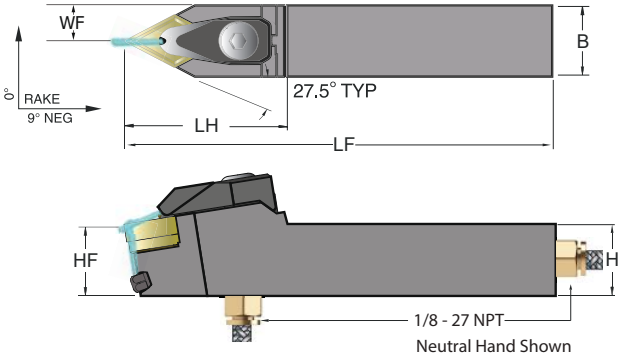

Neutral Hand Shown

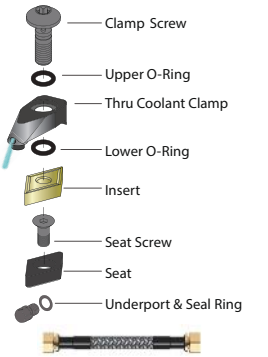

One standard coolant connector kit with 12" tubing is supplied

Order Number	Stock	Insert Number		Dimensions (inch)						Seat	Seat Screw	Thru Coolant Clamp Bridge	Clamp Screw	Upper 'O' Ring	Lower 'O' Ring	Underport Nozzle	Underport Seal Ring	1/8 NPT Plug	Coolant Connection Kit	Torx Wrench
				H	B	LF	LH	HF	WF											
DDPNN123B-CJS	□	DNMA DNMG DNMM DNGA DNGG DNGM	33	.750	.750	4.500	1.500	.750	.375	IDSN-322	SM-M3	JSLC-HPD3	JSCS-04	JSOR-01	JSOR-04	JSBP-M4-240	JSBPS-M4	JSNP-T125	JSPLPCK-125-250	T-20
DDPNN124B-CJS	□		43	.750	.750	4.500	1.750	.750	.375	JD-432	SM-M4-6	JSLC-HPD4	JSCS-04	JSOR-01	JSOR-04	JSBP-M4-240	JSBPS-M4	JSNP-T125	JSPLPCK-125-250	T-20
DDPNN163D-CJS	●		33	1.000	1.000	6.000	1.500	1.000	.500	IDSN-322	SM-M3	JSLC-HPD3	JSCS-04	JSOR-01	JSOR-04	JSBP-M4-240	JSBPS-M4	JSNP-T125	JSPLPCK-125-250	T-20
DDPNN164D-CJS	●		43	1.000	1.000	6.000	1.750	1.000	.500	JD-432	SM-M4-6	JSLC-HPD4	JSCS-04	JSOR-01	JSOR-04	JSBP-M4-240	JSBPS-M4	JSNP-T125	JSPLPCK-125-250	T-20
DDPNN204D-CJS	□		43	1.250	1.250	6.000	1.750	1.250	.625	JD-432	SM-M4-6	JSLC-HPD4	JSCS-04	JSOR-01	JSOR-04	JSBP-M4-240	JSBPS-M4	JSNP-T125	JSPLPCK-125-250	T-20
DDPNN244E-CJS	□		43	1.500	1.500	7.000	1.750	1.500	.750	JD-432	SM-M4-6	JSLC-HPD4	JSCS-04	JSOR-01	JSOR-04	JSBP-M4-240	JSBPS-M4	JSNP-T125	JSPLPCK-125-250	T-20

One standard coolant connector kit with tubing is supplied, see page 19 for details and high pressure coolant fitting. For spare parts see page 20.

DRGN R/L-CJS Tool holder Style G - for negative Round RNM_inserts

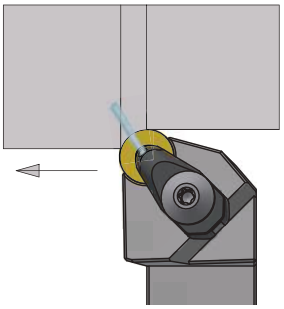

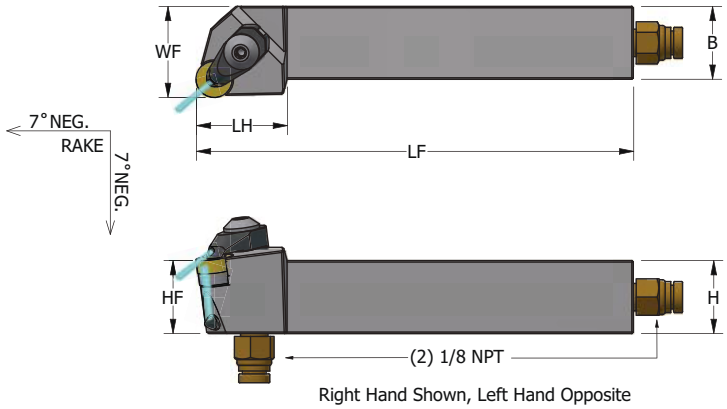

Right Hand Shown, Left Hand Opposite

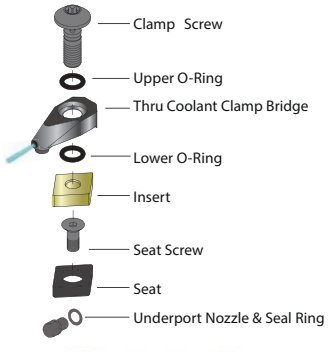

One standard coolant connector kit with 12" tubing is supplied

Order Number	Stock		Insert Number		Dimensions (inch)						Seat	Seat Screw	Thru Coolant Clamp Bridge	Clamp Screw	Upper 'O' Ring	Lower 'O' Ring	Underport Nozzle	Underport Seal Ring	1/8 NPT Plug	Coolant Connection Kit	Torx Wrench
	R	L			H	B	LF	LH	HF	WF											
DRGNR/L124B-CJS	□	□	RNMG	43	.750	.750	4.500	1.250	.750	1.000	IRSN-43	SM-M4-6	JSLC-HPCTW-4N	JSCS-04	JSOR-01	JSOR-04	JSBP-M4-190	JSBPS-M4	JSNP-T125	JSPLPCK-125-250	T-20
DRGNR/L164D-CJS	●	□		43	1.000	1.000	6.000	1.250	1.000	1.250	IRSN-43	SM-M4-6	JSLC-HPCTW-4N	JSCS-04	JSOR-01	JSOR-04	JSBP-M4-240	JSBPS-M4	JSNP-T125	JSPLPCK-125-250	T-20
DRGNR/L204D-CJS	□	□		43	1.250	1.250	6.000	1.250	1.250	1.500	IRSN-43	SM-M4-6	JSLC-HPCTW-4N	JSCS-04	JSOR-01	JSOR-04	JSBP-M4-240	JSBPS-M4	JSNP-T125	JSPLPCK-125-250	T-20
DRGNR/L165D-CJS	□	□		54	1.000	1.000	6.000	1.375	1.000	1.250	IRSN-53	SM-M6	JSLC-HPC5	JSCS-04	JSOR-01	JSOR-04	JSBP-M4-190	JSBPS-M4	JSNP-T125	JSPLPCK-125-250	T-20
DRGNR/L205D-CJS	□	□		54	1.250	1.250	6.000	1.375	1.250	1.500	IRSN-53	SM-M6	JSLC-HPC5	JSCS-04	JSOR-01	JSOR-04	JSBP-M4-240	JSBPS-M4	JSNP-T125	JSPLPCK-125-250	T-20
DRGNR/L206D-CJS	□	□		64	1.250	1.250	6.000	1.625	1.250	1.500	IRSN-63	SM-S6	JSLC-HPC6	JSCS-06	JSOR-01	JSOR-202	JSBP-M4-240	JSBPS-M4	JSNP-T125	JSPLPCK-125-250	T-20

One standard coolant connector kit with tubing is supplied, see page 19 for details and high pressure coolant fitting. For spare parts see page 20.

● □ = NEW

● : USA Stock

DSDNN-CJS Tool holder Style D - 45º side cutting lead angle for negative square SNM_inserts

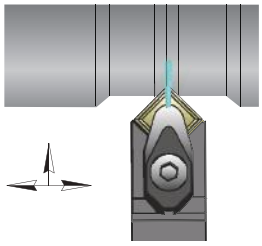

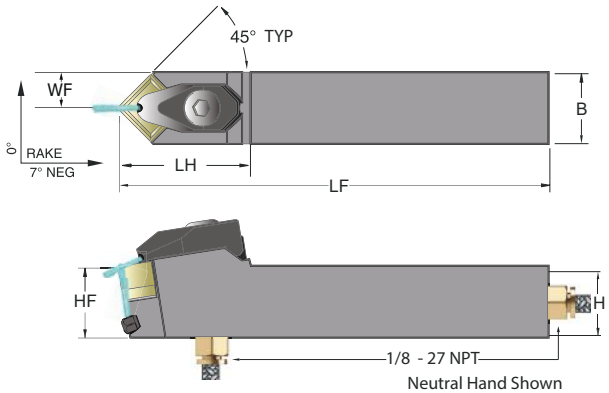

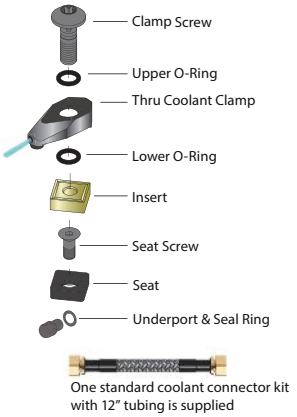

One standard coolant connector kit with 12" tubing is supplied

Order Number	Stock	Insert Number		Dimensions (inch)						Seat	Seat Screw	Thru Coolant Clamp Bridge	Clamp Screw	Upper 'O' Ring	Lower 'O' Ring	Underport Nozzle	Underport Seal Ring	1/8 NPT Plug	Coolant Connection Kit	Torx Wrench
				H	B	LF	LH	HF	WF											
DSDNN124B-CJS	□	SNMA SNMG SNMM SNGA SNGG SNGM	43◌	.750	.750	4.500	1.400	.750	.375	JS-432	SM-M4-6	JSLC-HPCTW-4N	JSCS-04	JSOR-01	JSOR-04	JSBP-M4-190	JSBPS-M4	JSNP-T125	JSPLPCK-125-250	T-20
DSDNN164D-CJS	●		43◌	1.000	1.000	6.000	1.400	1.000	.500	JS-432	SM-M4-6	JSLC-HPCTW-4N	JSCS-04	JSOR-01	JSOR-04	JSBP-M4-240	JSBPS-M4	JSNP-T125	JSPLPCK-125-250	T-20
DSDNN204D-CJS	□		43◌	1.250	1.250	6.000	1.400	1.250	.625	JS-432	SM-M4-6	JSLC-HPCTW-4N	JSCS-04	JSOR-01	JSOR-04	JSBP-M4-240	JSBPS-M4	JSNP-T125	JSPLPCK-125-250	T-20
DSDNN205D-CJS	□		54◌	1.250	1.250	6.000	1.625	1.250	.625	JS-533	SM-M6	JSLC-HPC5	JSCS-04	JSOR-01	JSOR-04	JSBP-M4-240	JSBPS-M4	JSNP-T125	JSPLPCK-125-250	T-20
DSDNN245E-CJS	□		54◌	1.500	1.500	7.000	1.625	1.500	.750	JS-533	SM-M6	JSLC-HPC5	JSCS-04	JSOR-01	JSOR-04	JSBP-M4-240	JSBPS-M4	JSNP-T125	JSPLPCK-125-250	T-20

One standard coolant connector kit with tubing is supplied, see page 19 for details and high pressure coolant fitting. For spare parts see page 20.

DSRN R/L-CJS Tool holder Style R - 15º side cutting lead angle for negative square SNM_inserts

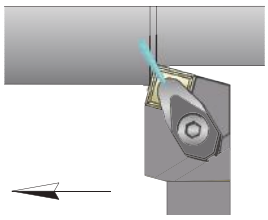

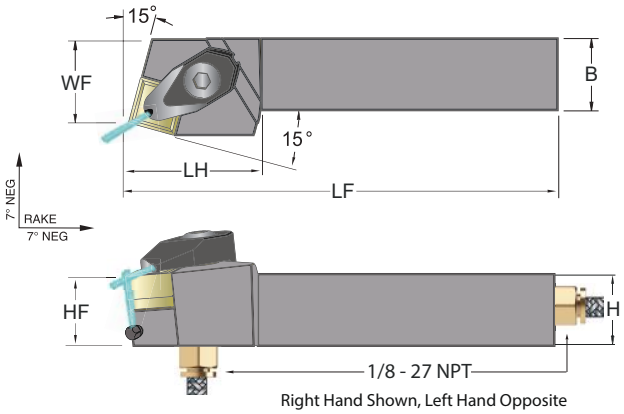

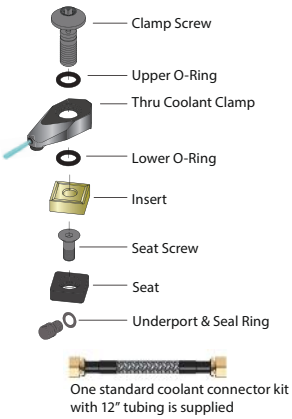

One standard coolant connector kit with 12" tubing is supplied

Order Number	Stock		Insert Number		Dimensions (inch)						Seat	Seat Screw	Thru Coolant Clamp Bridge	Clamp Screw	Upper 'O' Ring	Lower 'O' Ring	Underport Nozzle	Underport Seal Ring	1/8 NPT Plug	Coolant Connection Kit	Torx Wrench
	R	L			H	B	LF	LH	HF	WF											
DSRNR/L124B-CJS	□	□	SNMA SNMG SNMM SNGA SNGG SNGM	43◌	.750	.750	4.500	1.375	0.750	.880	JS-432	SM-M4-6	JSLC-HPCTW-4N	JSCS-04	JSOR-01	JSOR-04	JSBP-M4-190	JSBPS-M4	JSNP-T125	JSPLPCK-125-250	T-20
DSRNR/L164D-CJS	●	●		43◌	1.000	1.000	6.000	1.375	1.000	1.130	JS-432	SM-M4-6	JSLC-HPCTW-4N	JSCS-04	JSOR-01	JSOR-04	JSBP-M4-240	JSBPS-M4	JSNP-T125	JSPLPCK-125-250	T-20
DSRNR/L205D-CJS	□	□		54◌	1.250	1.250	6.000	1.500	1.250	1.340	JS-533	SM-M6	JSLC-HPC5	JSCS-04	JSOR-01	JSOR-04	JSBP-M4-240	JSBPS-M4	JSNP-T125	JSPLPCK-125-250	T-20
DSRNR/L245E-CJS	□	□		54◌	1.500	1.500	7.000	1.500	1.500	1.590	JS-533	SM-M6	JSLC-HPC5	JSCS-04	JSOR-01	JSOR-04	JSBP-M4-240	JSBPS-M4	JSNP-T125	JSPLPCK-125-250	T-20

One standard coolant connector kit with tubing is supplied, see page 19 for details and high pressure coolant fitting. For spare parts see page 20.

● □ = NEW

● : USA Stock

DTENN-CJS Tool holder Style E - 30º side cutting lead angle for negative triangle TNM_inserts

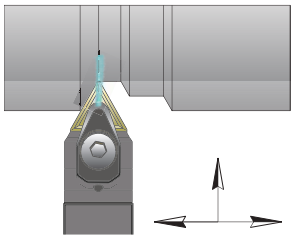

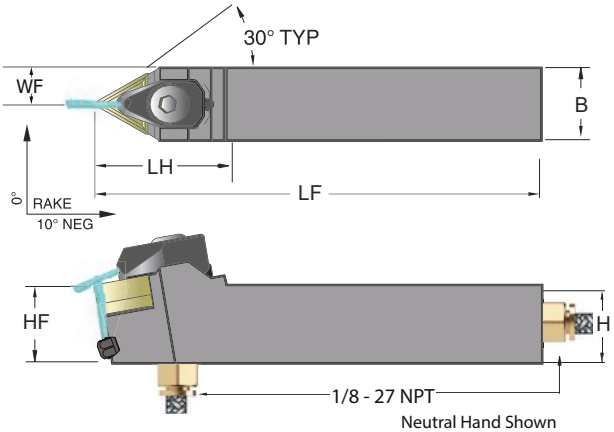

Neutral Hand Shown

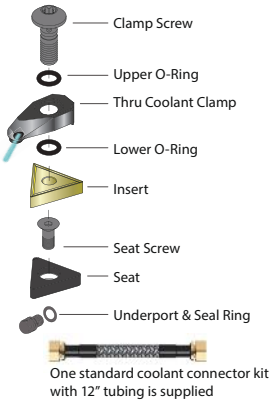

One standard coolant connector kit with 12" tubing is supplied

Order Number	Stock	Insert Number		Dimensions (inch)						Seat	Seat Screw	Thru Coolant Clamp Bridge	Clamp Screw	Upper 'O' Ring	Lower 'O' Ring	Underport Nozzle	Underport Seal Ring	1/8 NPT Plug	Coolant Connection Kit	Torx Wrench
				H	B	LF	LH	HF	WF											
DTENN123B-CJS	□	TNMA TNMG TNMM TNGA TNGG TNGM	33	.750	.750	4.500	1.350	.750	.375	JT-322	SM-M3	JSLC-HPTW-3N	JSCS-04	JSOR-01	JSOR-04	JSBP-M4-190	JSBPS-M4	JSNP-T125	JSPLPCK-125-250	T-20
DTENN124B-CJS	□		43	.750	.750	4.500	1.600	.750	.375	JT-433	SM-M4-6	JSLC-HPCTW-4N	JSCS-04	JSOR-01	JSOR-04	JSBP-M4-240	JSBPS-M4	JSNP-T125	JSPLPCK-125-250	T-20
DTENN163D-CJS	●		33	1.000	1.000	6.000	1.350	1.000	.500	JT-322	SM-M3	JSLC-HPTW-3N	JSCS-04	JSOR-01	JSOR-04	JSBP-M4-240	JSBPS-M4	JSNP-T125	JSPLPCK-125-250	T-20
DTENN164D-CJS	●		43	1.000	1.000	6.000	1.600	1.000	.500	JT-433	SM-S4-6	JSLC-HPCTW-4N	JSCS-04	JSOR-01	JSOR-04	JSBP-M4-240	JSBPS-M4	JSNP-T125	JSPLPCK-125-250	T-20
DTENN204D-CJS	□		43	1.250	1.250	6.000	1.600	1.250	.625	JT-433	SM-S4-6	JSLC-HPCTW-4N	JSCS-04	JSOR-01	JSOR-04	JSBP-M4-240	JSBPS-M4	JSNP-T125	JSPLPCK-125-250	T-20
DTENN244E-CJS	□		43	1.500	1.500	7.000	1.600	1.500	.750	JT-433	SM-S4-6	JSLC-HPCTW-4N	JSCS-04	JSOR-01	JSOR-04	JSBP-M4-240	JSBPS-M4	JSNP-T125	JSPLPCK-125-250	T-20

One standard coolant connector kit with tubing is supplied, see page 19 for details and high pressure coolant fitting. For spare parts see page 20.

DTJN R/L-CJS Tool holder Style J - 3º side cutting lead angle for negative triangle TNM_inserts

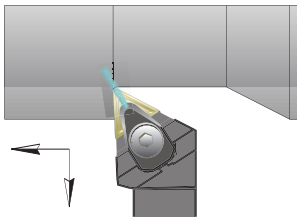

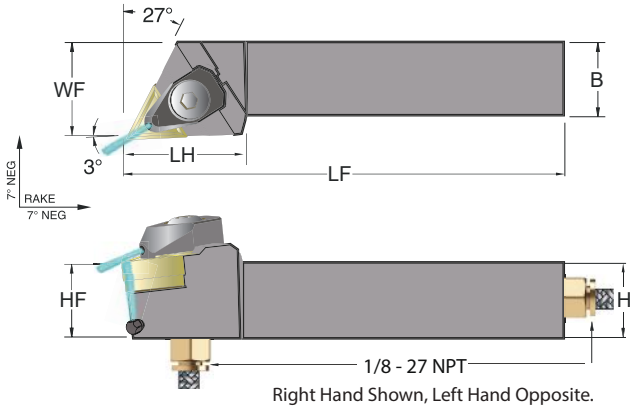

Right Hand Shown, Left Hand Opposite.

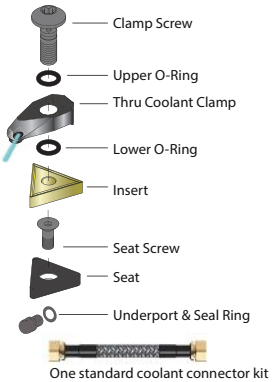

One standard coolant connector kit with 12" tubing is supplied

Order Number	Stock		Insert Number		Dimensions (inch)						Seat	Seat Screw	Thru Coolant Clamp Bridge	Clamp Screw	Upper 'O' Ring	Lower 'O' Ring	Underport Nozzle	Underport Seal Ring	1/8 NPT Plug	Coolant Connection Kit	Torx Wrench
	R	L			H	B	LF	LH	HF	WF											
DTJNR/L123B-CJS	□	●	TNMA TNMG TNMM TNGA TNGG TNGM	33	.750	.750	4.500	1.250	.750	1.000	JT-322	SM-M3	JSLC-HPTW-3N	JSCS-04	JSOR-01	JSOR-04	JSBP-M4-240	JSBPS-M4	JSNP-T125	JSPLPCK-125-250	T-20
DTJNR/L124B-CJS	□	□		43	.750	.750	4.500	1.375	.750	1.000	JT-433	SM-S4-6	JSLC-HPCTW-4N	JSCS-04	JSOR-01	JSOR-04	JSBP-M4-240	JSBPS-M4	JSNP-T125	JSPLPCK-125-250	T-20
DTJNR/L163D-CJS	●	●		33	1.000	1.000	6.000	1.250	1.000	1.250	JT-322	SM-M3	JSLC-HPTW-3N	JSCS-04	JSOR-01	JSOR-04	JSBP-M4-240	JSBPS-M4	JSNP-T125	JSPLPCK-125-250	T-20
DTJNR/L164D-CJS	●	●		43	1.000	1.000	6.000	1.375	1.000	1.250	JT-433	SM-M4-6	JSLC-HPCTW-4N	JSCS-04	JSOR-01	JSOR-04	JSBP-M4-240	JSBPS-M4	JSNP-T125	JSPLPCK-125-250	T-20
DTJNR/L204D-CJS	□	□		43	1.250	1.250	6.000	1.375	1.250	1.500	JT-433	SM-M4-6	JSLC-HPCTW-4N	JSCS-04	JSOR-01	JSOR-04	JSBP-M4-240	JSBPS-M4	JSNP-T125	JSPLPCK-125-250	T-20
DTJNR/L244E-CJS	□	□		43	1.500	1.500	7.000	1.500	1.500	2.000	JT-433	SM-M4-6	JSLC-HPCTW-4N	JSCS-04	JSOR-01	JSOR-04	JSBP-M4-240	JSBPS-M4	JSNP-T125	JSPLPCK-125-250	T-20

One standard coolant connector kit with tubing is supplied, see page 19 for details and high pressure coolant fitting. For spare parts see page 20.

● □ = NEW

● : USA Stock

DVVNN-CJS Tool holder Style V - 17.5º Side cutting lead angle for negative 35º diamond VNM_inserts

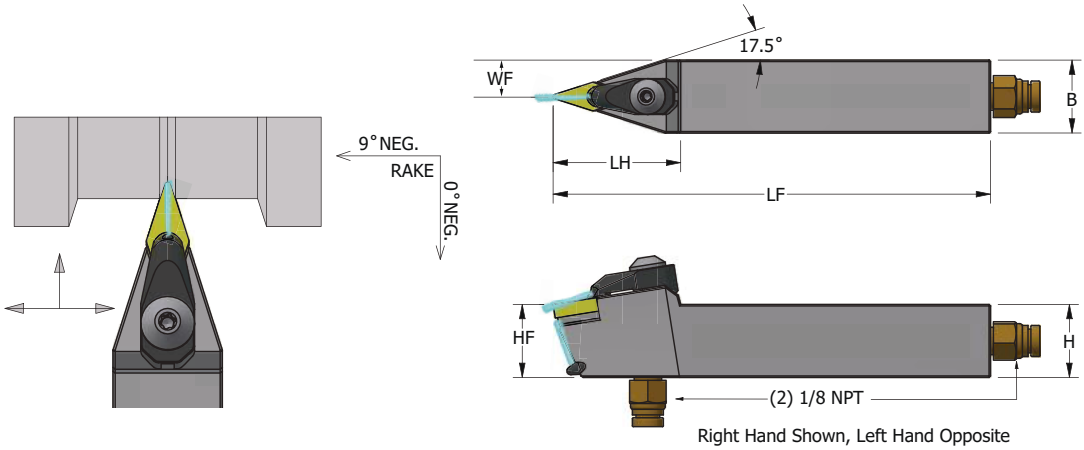



Order Number	Stock	Insert Number		Dimensions (inch)						Seat	Seat Screw	Thru Coolant Clamp Bridge	Clamp Screw	Upper 'O' Ring	Lower 'O' Ring	Underport Nozzle	Underport Seal Ring	1/8 NPT Plug	Coolant Connection Kit	Torx Wrench
				H	B	LF	LH	HF	WF											
DVVNN123B-CJS	●	VNMA VNMG VNGA VNGG VNGM	33○	.750	.750	4.500	1.750	.750	.375	JV-322	SM-M3	JSLC-HPV3	JSCS-04	JSOR-01	JSOR-04	JSBP-M4-240	JSBPS-M4	JSNP-T125	JSPLPCK-125-250	T-20
DVVNN163D-CJS	●		33○	1.000	1.000	6.000	1.750	1.000	.500	JV-322	SM-M3	JSLC-HPV3	JSCS-04	JSOR-01	JSOR-04	JSBP-M4-365	JSBPS-M4	JSNP-T125	JSPLPCK-125-250	T-20
DVVNN203D-CJS	□		33○	1.250	1.250	6.000	1.750	1.250	.625	JV-322	SM-M3	JSLC-HPV3	JSCS-04	JSOR-01	JSOR-04	JSBP-M4-365	JSBPS-M4	JSNP-T125	JSPLPCK-125-250	T-20

One standard coolant connector kit with tubing is supplied, see page 19 for details and high pressure coolant fitting. For spare parts see page 20.

DVJN R/L-CJS Tool holder Style J - Negative 3º side cutting lead angle for negative 35º diamond VNM_inserts

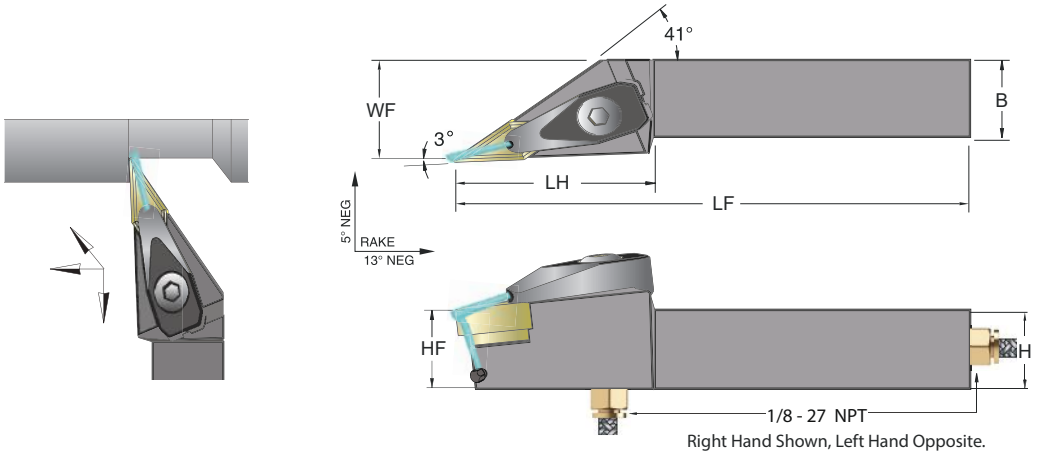

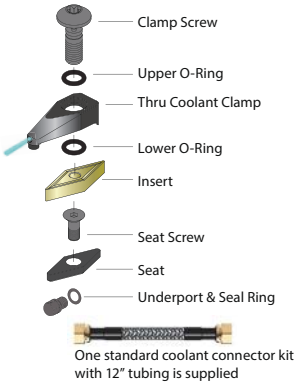

Order Number	Stock		Insert Number		Dimensions (inch)						Seat	Seat Screw	Thru Coolant Clamp Bridge	Clamp Screw	Upper 'O' Ring	Lower 'O' Ring	Underport Nozzle	Underport Seal Ring	1/8 NPT Plug	Coolant Connection Kit	Torx Wrench
	R	L			H	B	LF	LH	HF	WF											
DVJNR/L123B-CJS	●	●	VNMA VNMG VNMM VNGA VNGG VNGM	33○	.750	.750	4.500	1.750	.750	1.000	JV-322	SM-M3	JSLC-HPV3	JSCS-04	JSOR-01	JSOR-04	JSBP-M4-365	JSBPS-M4	JSNP-T125	JSPLPCK-125-250	T-20
DVJNR/L163D-CJS	●	●		33○	1.000	1.000	6.000	1.750	1.000	1.250	JV-322	SM-M3	JSLC-HPV3	JSCS-04	JSOR-01	JSOR-04	JSBP-M4-365	JSBPS-M4	JSNP-T125	JSPLPCK-125-250	T-20
DVJNR/L203D-CJS	●	●		33○	1.250	1.250	6.000	1.750	1.250	1.500	JV-322	SM-M3	JSLC-HPV3	JSCS-04	JSOR-01	JSOR-04	JSBP-M4-365	JSBPS-M4	JSNP-T125	JSPLPCK-125-250	T-20
DVJNR/L243E-CJS	□	□		33○	1.500	1.500	7.000	2.000	1.500	2.000	JV-322	SM-M3	JSLC-HPV3	JSCS-04	JSOR-01	JSOR-04	JSBP-M4-365	JSBPS-M4	JSNP-T125	JSPLPCK-125-250	T-20

One standard coolant connector kit with tubing is supplied, see page 19 for details and high pressure coolant fitting. For spare parts see page 20.

● □ = NEW

● : USA Stock

DWLN R/L-CJS Tool holder Style L - Negative 5º end or side cutting lead angle for negative 80º trigon WNM_inserts

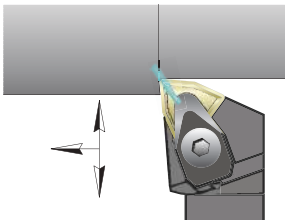

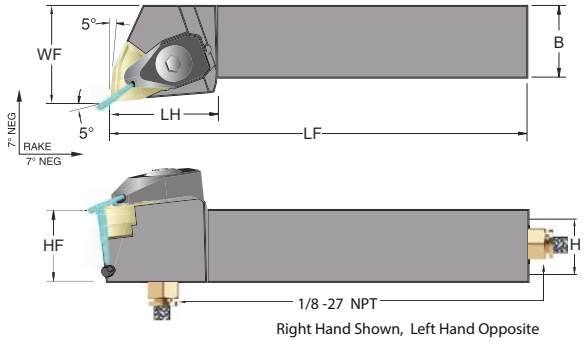

Right Hand Shown, Left Hand Opposite

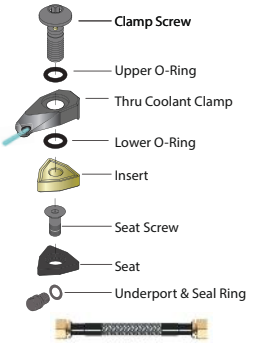

One standard coolant connector kit with 12" tubing is supplied

Order Number	Stock		Insert Number		Dimensions (inch)						Seat	Seat Screw	Thru Coolant Clamp Bridge	Clamp Screw	Upper 'O' Ring	Lower 'O' Ring	Underport Nozzle	Underport Seal Ring	1/8 NPT Plug	Coolant Connection Kit	Torx Wrench
	R	L			H	B	LF	LH	HF	WF											
DWLNR/L123B-CJS	●	□	WNMA WNMG WNMM WNGA WNGG WNGM	33◌	.750	.750	4.500	1.250	.750	1.000	IWSN-322	SM-M4-6-245	*JSLC-HPTW3R/L	JSCS-04	JSOR-01	JSOR-04	JSBP-M4-190	JSBPS-M4	JSNP-T125	JSPLPCK-125-250	T-20
DWLNR/L124B-CJS	●	●		43◌	.750	.750	4.500	1.375	.750	1.000	IWSN-423	SM-M4-6	*JSLC-HPTW4R/L	JSCS-04	JSOR-01	JSOR-04	JSBP-M4-190	JSBPS-M4	JSNP-T125	JSPLPCK-125-250	T-20
DWLNR/L163D-CJS	●	●		33◌	1.000	1.000	6.000	1.250	1.000	1.250	IWSN-322	SM-M4-6-245	*JSLC-HPTW3R/L	JSCS-04	JSOR-01	JSOR-04	JSBP-M4-240	JSBPS-M4	JSNP-T125	JSPLPCK-125-250	T-20
DWLNR/L164D-CJS	●	●		43◌	1.000	1.000	6.000	1.375	1.000	1.250	IWSN-433	SM-M4-6	*JSLC-HPTW4R/L	JSCS-04	JSOR-01	JSOR-04	JSBP-M4-240	JSBPS-M4	JSNP-T125	JSPLPCK-125-250	T-20
DWLNR/L204D-CJS	●	□		43◌	1.250	1.250	6.000	1.375	1.250	1.500	IWSN-423	SM-M4-6	*JSLC-HPTW4R/L	JSCS-04	JSOR-01	JSOR-04	JSBP-M4-240	JSBPS-M4	JSNP-T125	JSPLPCK-125-250	T-20
DWLNR/L244E-CJS	□	□		43◌	1.500	1.500	7.000	1.375	1.500	2.000	IWSN-423	SM-M4-6	*JSLC-HPTW4R/L	JSCS-04	JSOR-01	JSOR-04	JSBP-M4-240	JSBPS-M4	JSNP-T125	JSPLPCK-125-250	T-20

One standard coolant connector kit with tubing is supplied, see page 19 for details and high pressure coolant fitting. For spare parts see page 20.
* Right hand holders uses Right hand Clamp Bridge

● □ = NEW

● : USA Stock

Boring Bars and Tool holders-Low Pressure Coolant Connection 3 Pcs. Kit

Working Pressure

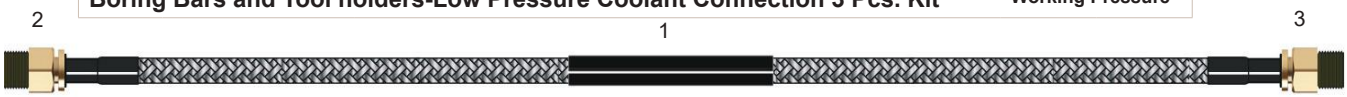

up to 400 psi (30 bar)

	Part Number	Description	Bar	PSI
Item	**JSPLPCK-125-250**	**1/8" NPT Low Pressure Quick Release Coolant 3 pcs Kit**	**30**	**400**
1	JS-T250-1200	1/4" OD, 12" Low High Pressure Long Tubing		
2	JS-MC125-250	1/8" NPT-1/4" Bore, Straight Low Pressure Quick Release Connector		
3	JS-MC125-250	1/8" NPT-1/4" Bore, Straight Low Pressure Quick Release Connector		

Boring Bars and Tool holders-High Pressure Coolant Connection 5 Pcs. Kit

Working Pressure



over 400 psi (30 bar)

	Part Number	Description	Bar	PSI
Item	**DT-1/8 HP-QRCK**	**1/8" NPT High Pressure Quick Release Coolant 5 pcs Kit**	**200**	**2800**
1	DT-HPTU-8X4	8mm High Pressure 8mm Coolant Tubing Only		
2	DT-HPC0-6x8	High Pressure Quick Release Straight Intec		
3	DT-HPC0-6x8	High Pressure Quick Release Straight Intec		
4	DT-HP0SC-1/8x6	1/8" NPT Straight High Pressure Quick Release Connector		
5	DT-HP90C-1/8x6	1/8" NPT 90° Elbow High Pressure Quick Release Connector		

Thru Coolant System Spare Parts

Turning Insert (CNMG & SNMG) Clamp Sets*

Image	Description
CNMG & SNMG INSERT STYLES 	JSLC-HPCTW-4N
	JSLC-HPC5
	JSLC-HPC6

Turning Insert (DNMG & TNMG) Clamp Sets*

Image	Description
DNMG INSERT STYLES 	JSLC-HPD3
	JSLC-HPD4

Turning Insert (TNMG & WNMG) Clamp Sets*

Image	Description
TNMG & WNMG INSERT STYLES 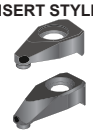	JSLC-HPTW3N
	JSLC-HPTW3R
	JSLC-HPTW3L
	JSLC-HPCTW-4N
	JSLC-HPTW4R
	JSLC-HPTW4L

Turning Insert (VNMG) Clamp Sets*

Image	Description
VNMG INSERT STYLE 	JSLC-HPV3

Turning Shim Seats

Image	Description
80° DIAMOND 	JC-432
	JC-533
	JC-633
55° DIAMOND 	JD-432
35° DIAMOND 	JV-322
ROUND 	IRSN-43
	IRSN-53
	IRSN-63
SQUARE 	JS-432
	JS-533
TRIANGLE 	JT-322
	JT-433
TRIGON 	IWSN-322
	IWSN-423

Insert Torx Screws/ Shim Screws

Image	Description
SHIM SCREWS 	SM-M3
	SM-M6
	SM-M4-6
	SM-M4-6-245
	SM-S6
1/8 NPT PLUG 	JSNP-T125

Clamp Screws

Image	Description
CLAMP SCREWS 	JSCS-04
	JSCS-06

Clamp O Ring Seals

Image	Description
UPPER "O" RINGS 	JSOR-01
LOWER "O" RINGS 	JSOR-04
	JSOR-202

Torx Keys

Image	Description
TORX KEYS 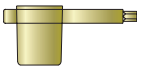	T-20

Underport Nozzle

Image	Description
Underport Nozzle 	JSBP-M4-190
	JSBP-M4-240
	JSBP-M4-365

Underport Seal

Image	Description
UNDERPORT SEAL 	JSBPS-M4

*Turning ***clamp sets*** include ***upper and lower o-rings***.

Memo

MTEC

MACHINING TECHNOLOGY AND EDUCATION CENTER

Welcome to our new world-class Machining Technology and Education Center (MTEC) in Mooresville, NC providing year round support and services to North America.



ABOUT MTEC

TOOLING PROPOSALS & EVALUATION

We will review your current processes or outline a new process. From this review, we will improve productivity, analyze programming methods and output a solution with programming, tooling and time savings.

MACHINING SIMULATION

Using the latest CAD/CAM software and our cutting tool experience, we will outline a new process using proper machining techniques to maximize tool life and productivity.

TECHNICAL SUPPORT

Dedicated local professionals to answer any of your order, product or technical questions.

TRAINING

We are excited to offer several levels of training with goals to reach our highest level--Craftsman Machining Technology. At MTEC NC, we will train using a combination of classroom and hands-on machine time to develop skills and real-world understanding of materials, tools and applications. In addition to multi-day courses, we will have Machining Technology skills seminars, as well as seminars from our partners to complement our apprentice level courses, our journeyman courses, and up to our craftsman level courses.

PROCESS IMPROVEMENTS

Review of the complete part processing and recommend changes of speed, feed, new tooling, reduction of passes, modifying programming and other solutions to reduce cycle time, save money and be proactive.





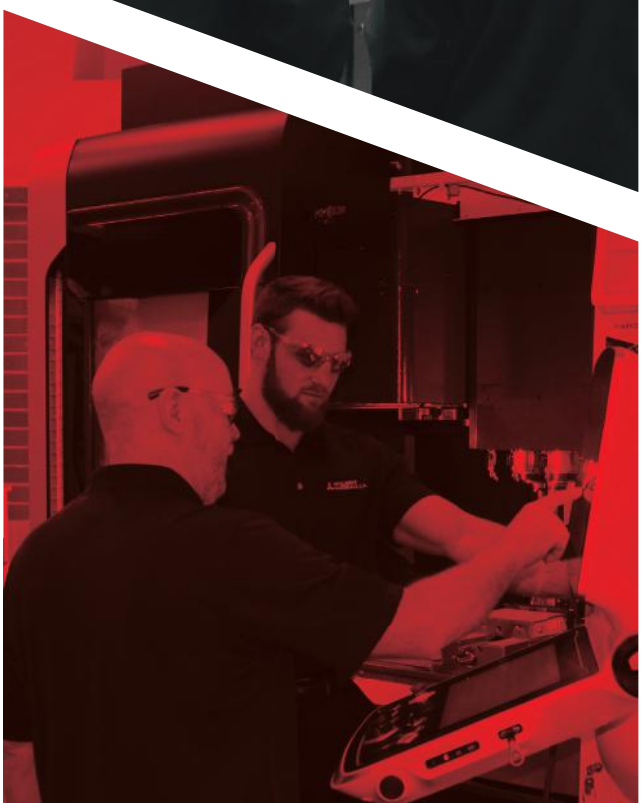

WEBINARS

Our FREE online webinar series is available anytime on-demand. Narrated by the MTEC training staff, you will receive in-depth knowledge of the topic. Simply register online at the link below for access. You will receive a certificate upon completion of each course.

mmusnewsstand.com/register

ONLINE TRAINING

Our FREE e-learning program offers 11 courses in drilling, milling, turning, threading, tool grades and workpiece materials. Once each course is completed, you will be given the opportunity to print a certificate.

- Basic Drilling
- Basic Milling
- Basic Turning
- Advanced Drilling
- Advanced End Milling
- Advanced Turning
- Basic Threading
- Advanced Face Milling
- Basic Workpiece Materials
- Tool Grades
- Advanced Workpiece Materials

TRAINING COURSES

Programs are designed for several levels of skill development – from basic understanding to advance manufacturing with digital solutions, complementing to your valued experience in CNC machining environment. Participate in machining demonstrations with Mitsubishi Materials' skilled engineers. Discover methods to reduce setup and cycle time, optimize programs and enhance your knowledge base.

Information on course schedule,
course description, and accommodations

MTECTRAINING.INFO

Follow the QR Code for a virtual facility tour

MITSUBISHI MATERIALS U.S.A.

MITSUBISHI MATERIALS U.S.A. CORPORATION

California Office
(Headquarters)

3535 Hyland Avenue, Suite 200
Costa Mesa, CA 92626
Customer Service: 800.523.0800
Technical Service: 800.486.2341

Chicago Office
(Engineering)

300 N. Martingale Road, Suite 500
Schaumburg, IL 60173
Main: 847.252.6300
Fax: 847.519.1732

MMC Metal de Mexico, S.A. DE C.V.

Av. La Cañada No.16,
Parque Industrial Bernardo
Quintana, El Marques,
Queretaro C.P. 76246 MEXICO
Main: +52.442.221.61.36
Fax: +52.442.221.61.34

North Carolina-MTEC
(Marketing & Technical Center)

105 Corporate Center Drive, Suite A
Mooresville, NC 28117
Main: 980.312.3100
Fax: 704.746.9292

Toronto Office
(Canada Branch)

600 Matheson Blvd. Unit 5 (Office)
Mississauga, ON L5R 4C1
Main: 905.814.0240
Fax: 905.814.0245

Detroit Office
(Moldino CS)

2001 Orndorf Drive
Brighton, MI 48116
Main: 248.308.2620
Fax: 248.308.2627

FOR YOUR SAFETY

- Don't handle inserts and chips without gloves.
- Please machine within the recommended application range and exchange expired tools with new ones in advance of breakage.
- Please use safety covers and wear safety glasses.
- When using compounded cutting oils, please take fire precautions.
- When attaching inserts or spare parts, please use only the correct wrench or driver.
- When using rotating tools, please make a trial run to check run-out, vibration and abnormal sounds etc.

www.mmc-carbide.com/us

Tools specifications subject to change without notice.