MITSUBISHI MATERIALS

AUTOMOTIVE SOLUTIONS



PRECISION TOOLING FOR
AUTOMOTIVE APPLICATIONS



MITSUBISHI MATERIALS



AUTOMOTIVE SOL

TABLE OF CONTENTS

How do you calibrate a perfect fit when it comes to parts for the Automotive Industry? Use cutting tools that are absolutely precise — every time.

We understand the challenges manufacturers face when it comes to machining complex parts with challenging geometries and fine finishes. Our cutting tools are expertly crafted by Mitsubishi Materials with exceptional quality and precision to provide demanding application solutions necessary for improved productivity in manufacturing.

Our promise is to deliver high-quality precision cutting tools that enable you to manufacture precisely perfect products every day.

4 ENGINE

CYLINDER BLOCK

CYLINDER HEAD

CONNECTING ROD

CRANK SHAFT / CAM SHAFT





UTIONS

12 TRANSMISSION

TRANSMISSION CASE / VALVE BODY

GEARS / EPICYCLIC CARRIERS

SHAFT / CVT PULLEY

18 AXLE / BRAKE

STEERING KNUCKLE / HUB







20 EV PARTS

BEARING HOLDER

GEAR HOUSING

INVERTER CASE

MOTOR HOUSING



ENGINE

CYLINDER BLOCK

Maintaining the engine's stability and lubrication while withstanding a variety of temperatures and loads. Transferring oil to all parts of the engine, lubricating all the critical components, via a number of oil galleries.

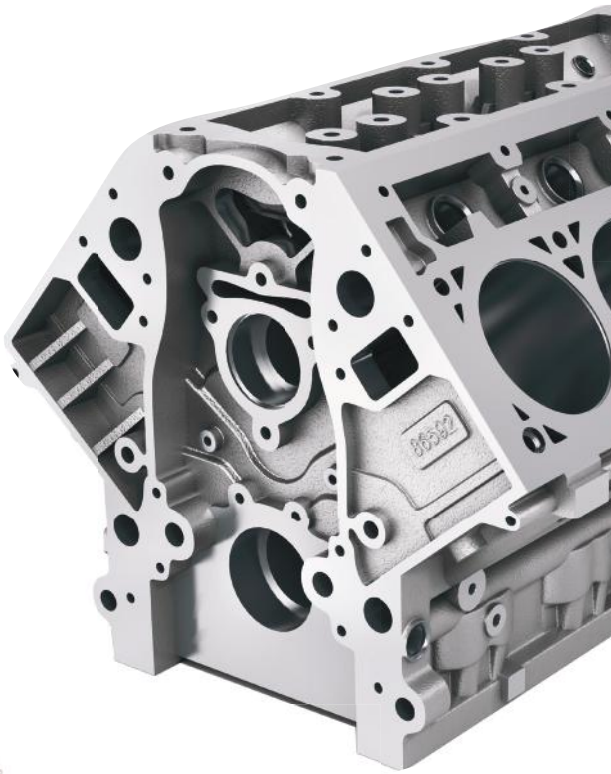

FMAX

HIGH FEED FINISH MILLING CUTTER FOR ALUMINUM ALLOYS AND CAST IRONS

- Designed for high speeds
- Light weight, high rigidity body
- High precision, easy setting
- Inserts, PCD grades & CBN grades





AHX

GENERAL PURPOSE MULTI CORNER INSERT TYPE FACE MILLING CUTTER

- Unique 14 cornered inserts
- Designed to control insert breakage
- Through coolant holes
- Innovative clamp system





MAS

SOLID CARBIDE DRILL FOR ALUMINUM ALLOY AND CAST IRON

- Coolant through drill with burnishing effect
- 10° helix angle for excellent chip discharge
- 4 point support gives high hole accuracy
- Reduced noise drilling



MNS

WSTAR DRILL SERIES FOR MACHINING FOR ALUMINUM ALLOYS

- Optimum flute and cutting edge geometry
- Increased lubrication to the drill point
- High-feed, high efficiency drilling
- Stable drilling of deep holes



MVS

NEW GENERATION OF SOLID CARBIDE DRILLS EMPLOYS NEW TRI-COOLING TECHNOLOGY®

- Excellent margin wear
- New wavy cutting edge
- Zero-µ surface
- TRI-cooling technology®

VPX

MULTI-FUNCTIONAL CUTTER FOR HIGH-EFFICIENCY MACHINING

- Improved chip evacuation
- Insert grades for a wide range of materials
- Large wiper flats for better surface finish
- Longer cutter body tool life



ENGINE

CYLINDER HEAD

Maintaining the engine's stability and lubrication while withstanding a variety of temperatures and loads. Transferring oil to all parts of the engine, lubricating all the critical components, via a number of oil galleries.

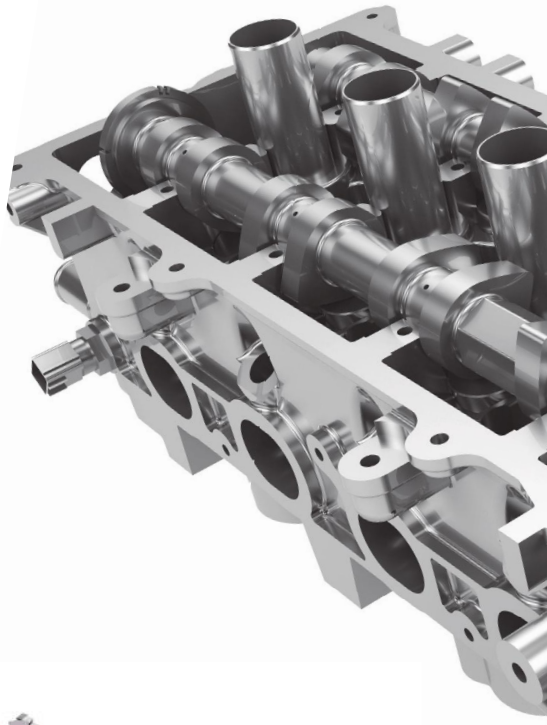

FMAX

HIGH FEED FINISH MILLING CUTTER FOR ALUMINUM ALLOYS AND CAST IRONS

- Designed for high speeds
- Light weight, high rigidity body
- High precision, easy setting
- Inserts, PCD grades & CBN grades





MAS

SOLID CARBIDE DRILL FOR ALUMINUM ALLOY AND CAST IRON

- Coolant through drill with burnishing effect
- 10° helix angle for excellent chip discharge
- 4 point support gives high hole accuracy
- Reduced noise drilling

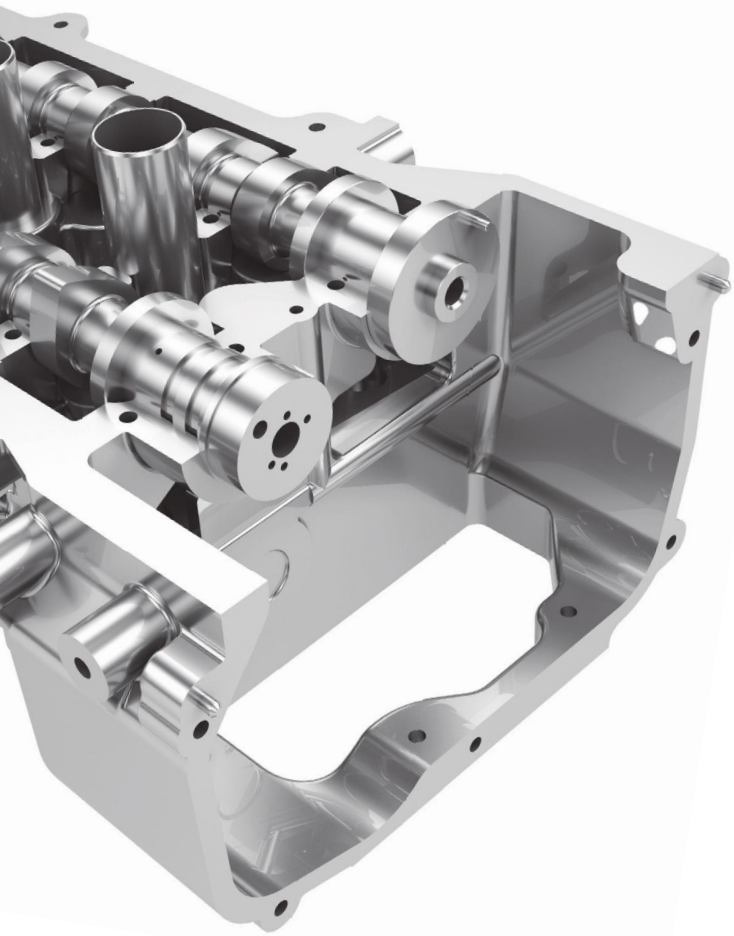



MVS

NEW GENERATION OF SOLID CARBIDE DRILLS EMPLOYS NEW TRI-COOLING TECHNOLOGY®

- Excellent margin wear
- New wavy cutting edge
- Zero-µ surface
- TRI-cooling technology®

AXD

MULTI-FUNCTIONAL MILLING FOR MACHINING OF ALUMINUM AND TITANIUM ALLOYS

- High speed, efficiency and safety
- High spindle speeds possible
- Optimal designed chip pocket
- High rigidity body



VPX

MULTI-FUNCTIONAL CUTTER FOR HIGH-EFFICIENCY MACHINING

- Improved chip evacuation
- Insert grades for a wide range of materials
- Large wiper flats for better surface finish
- Longer cutter body tool life



ENGINE

CONNECTING ROD

A connecting rod is the part of a piston engine which connects the piston to the crankshaft. Together with the crank, the connecting rod converts the reciprocating motion of the piston into the rotation of the crankshaft.



MVX

HIGHLY RIGID BODY PRODUCED BY UTILIZING THE LATEST TECHNOLOGY

- Optimum positioning of inserts
- Inclined coolant through holes
- Economical 4-corner insert
- Unique chip breaker design





DVAS

A NEW STANDARD FOR FAST, RELIABLE AND ACCURATE DRILLING

- Advanced coolant hole
- New XR point thinning
- Tough and sharp cutting edge design
- Unique rigid form



MVS

NEW GENERATION OF SOLID CARBIDE DRILLS EMPLOYS NEW TRI-COOLING TECHNOLOGY®

- Excellent margin wear
- New wavy cutting edge
- Zero-µ surface
- TRI-cooling technology®





ASX

GENERAL USE SCREW-ON TYPE SHOULDER AND FACE MILLING CUTTER

- Insert grades for a wide range of materials
- Chipbreakers for a wide range of applications
- Stable, long tool life
- High accuracy body

WSX

GENERAL PURPOSE DOUBLE-SIDED INSERT TYPE FACE MILL

- Low cutting resistance
- Through coolant holes
- Unique double Z insert geometry
- Balanced convenience and high efficiency



ENGINE

CRANK SHAFT / CAM SHAFT

The camshaft controls the opening and closing of valves through the combustion process, and the crank shaft takes the energy from that process and connects it to the rest of the vehicle.





MVS

NEW GENERATION OF SOLID CARBIDE DRILLS EMPLOYS NEW TRI-COOLING TECHNOLOGY®

- Excellent margin wear
- New wavy cutting edge
- Zero-µ surface
- TRI-cooling technology®



DVAS

A NEW STANDARD FOR FAST, RELIABLE AND ACCURATE DRILLING

- Advanced coolant hole
- New XR point thinning
- Tough and sharp cutting edge design
- Unique rigid form



SCREW-IN TOOLS

EASY TO USE SCREW-IN HEADS FOR DIE AND MOLD MACHINING

- Metric sizes available
- Coolant through
- Wide variety of machining
- High quality machining





MC6100

PUSHING THE BOUNDARIES OF STEEL TURNING

- CVD coating layer prevents crater wear
- Reduced flank wear
- Improved fracture resistance
- Outstanding wear resistance

MFE

SOLID CARBIDE FLAT BOTTOM DRILLS

- New "Z" thinning with lower thrust force
- Excellent chip control
- Gash land for stronger corner
- ZERO-μ surface





VPX

MULTI-FUNCTIONAL CUTTER FOR HIGH-EFFICIENCY MACHINING

- Improved chip evacuation
- Insert grades for a wide range of materials
- Large wiper flats for better surface finish
- Longer cutter body tool life

WWX

DOUBLE-SIDED INSERT TYPE SHOULDER MILL

- Generous insert thickness Strong X geometry
- Excellent control and chip abrasion support
- Optimized insert support
- Variety of cutter types, diameters and pitches



TRANSMISSION

TRANSMISSION CASE / VALVE BODY



The transfer case transfers power from the transmission to the front and rear axles by means of drive shafts. It also synchronizes the difference between the rotation of the front and rear wheels, and may contain one or more sets of low range gears for off-road use.

The valve body is one of the pieces of equipment that allows an automatic transmission to function correctly. By channeling hydraulic fluid through a series of paths, the valve body is able to trigger the correct clutch pack for the selected gearing.

FMAX

HIGH FEED FINISH MILLING CUTTER FOR ALUMINUM ALLOYS AND CAST IRONS

- Designed for high speeds
- Light weight, high rigidity body
- High precision, easy setting
- Inserts, PCD grades & CBN grades





AXD4000

CONTINUOUS HIGH AND ULTRA HIGH SPEED MACHINING OF ALUMINUM ALLOYS

- High speed, efficiency and safety
- High spindle speeds possible
- Optimal designed chip pocket
- High rigidity body



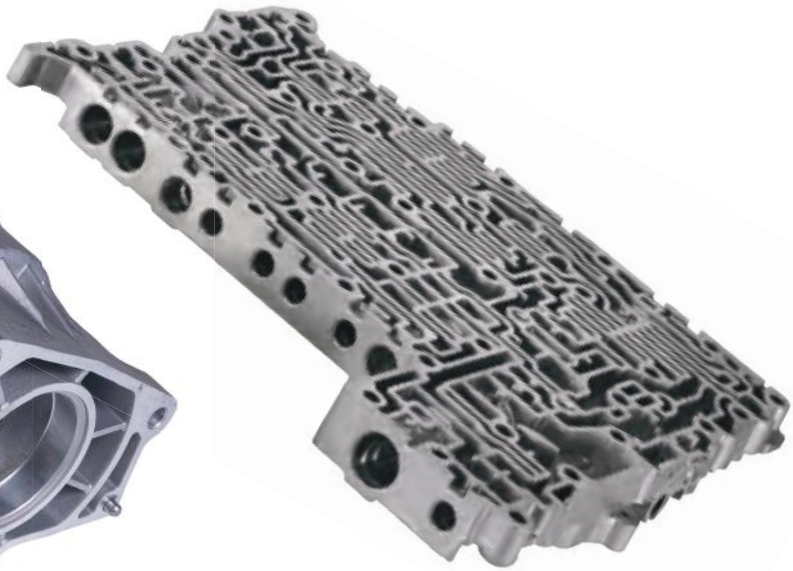



MAS

SOLID CARBIDE DRILL FOR ALUMINUM ALLOY AND CAST IRON

- Coolant through drill with burnishing effect
- 10° helix angle for excellent chip discharge
- 4 point support gives high hole accuracy
- Reduced noise drilling

ALIMASTER

HIGH EFFICIENCY MACHINING OF ALUMINUM ALLOYS

- Strengthened center cutting edges
- Helical coolant holes
- Ideal flute geometry
- Irregular helix and curved flute exit geometry



TRANSMISSION

GEARS / EPICYCLIC CARRIERS

The function of any transmission is transferring engine power to the driveshaft and rear wheels (or axle half-shafts and front wheels in a front-wheel-drive vehicle). Gears inside the transmission change the vehicle's drive-wheel speed and torque in relation to engine speed and torque.





MBS140

SOLID CBN GRADE FOR CAST IRON AND SINTERED ALLOY

- 100% solid CBN structure
- Balanced wear and fracture resistance
- Highly efficient for large depths of cut
- High speed machining

MB4020

CBN GRADE FOR SINTERED ALLOYS AND CAST IRONS

- High cutting edge strength
- Excellent welding resistance
- Prevents burr formation
- Stabilizes dimensional accuracy



MC6100

PUSHING THE BOUNDARIES OF STEEL TURNING

- CVD coating layer prevents crater wear
- Reduced flank wear
- Improved fracture resistance
- Outstanding wear resistance





MC7100

A REVOLUTION IN STAINLESS STEEL TURNING

- Excellent resistance to notch wear
- Good burr control
- Outstanding tool life
- Smooth cutting edge





MVS

NEW GENERATION OF SOLID CARBIDE DRILLS EMPLOYS NEW TRI-COOLING TECHNOLOGY®

- Excellent margin wear
- New wavy cutting edge
- Zero-µ surface
- TRI-cooling technology®

TRANSMISSION

SHAFT / CVT PULLEY

Transmission shafts are used to transmit power between the source and the machine absorbing power. The CVT uses a V-belt which runs between two variable-diameter pulleys. The pulleys consist of two cone-shaped halves that move together and apart. The V-belt runs between these two halves, so the effective diameter of the pulley is dependent on the distance between the two halves of the pulley.

MC6100

PUSHING THE BOUNDARIES OF STEEL TURNING

- CVD coating layer prevents crater wear
- Reduced flank wear
- Improved fracture resistance
- Outstanding wear resistance



BC8200

EXCELLENT COATED CBN GRADE FOR TURNING OF HARDENED STEELS

- Outstanding tool life
- Excellent wear resistance
- Optimized substrate technology
- Heat resistant binder











GY

INNOVATIVE CLAMPING SYSTEM ENSURES RELIABLE GROOVING

- Face grooving with no interference
- Excellent chip control
- Excellent welding resistance
- Precise circumferential groove



CUTTING OFF



COPYING / RECESSING



GROOVING



MULTI-FUNCTIONAL GROOVING



AXLE/BRAKE
STEERING KNUCKLE / HUB

The steering knuckle is the pivot point of the steering system, which allows the wheels to turn. On cars with conventional suspension systems, the steering knuckle's spindle locates and supports the inner and outer wheel bearings. The steering knuckle is a part of the wheel hub which is finally bolted to the wheels.



MVS

NEW GENERATION OF SOLID CARBIDE DRILLS EMPLOYS NEW TRI-COOLING TECHNOLOGY®

- Excellent margin wear
- New wavy cutting edge
- Zero-µ surface
- TRI-cooling technology®



MP6000

PVD COATED GRADE FOR EXTRA TOUGHNESS

- Excellent welding resistance
- Special cemented carbide substrate
- Improved thermal conductivity
- Resistance to thermal cracking





VPX

MULTI-FUNCTIONAL CUTTER FOR HIGH-EFFICIENCY MACHINING

- Improved chip evacuation
- Insert grades for a wide range of materials
- Large wiper flats for better surface finish
- Longer cutter body tool life





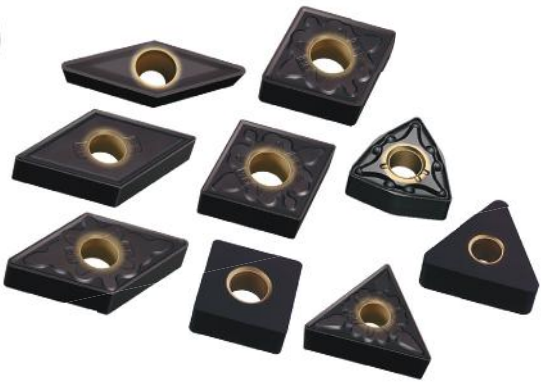

MC5100

ISO INSERT SERIES FOR CAST IRON TURNING

- Reduced cycle times
- Speeds up to 2,000 SFM
- Extra thick Al2O3 coating layer
- Outstanding wear & chipping resistance

MC6100

PUSHING THE BOUNDARIES OF STEEL TURNING

- CVD coating layer prevents crater wear
- Reduced flank wear
- Improved fracture resistance
- Outstanding wear resistance





MHE

SPECIAL ORDER TOOL DESIGNED FOR THE MACHINING OF THE WHEEL HUB

- Lower cutting edge height preventing hardening
- Small point angle for stable hole accuracy
- High tool rigidity
- Narrow flute for better chip control

EV PARTS

BEARING HOLDER

Bearing housings support your bearings, protect them from contaminants while keeping in lubricant, and can also house monitoring equipment. Essentially, they provide customizable mounted bearing solutions and help maximize performance, service life and cost-efficient maintenance of the incorporated bearing.

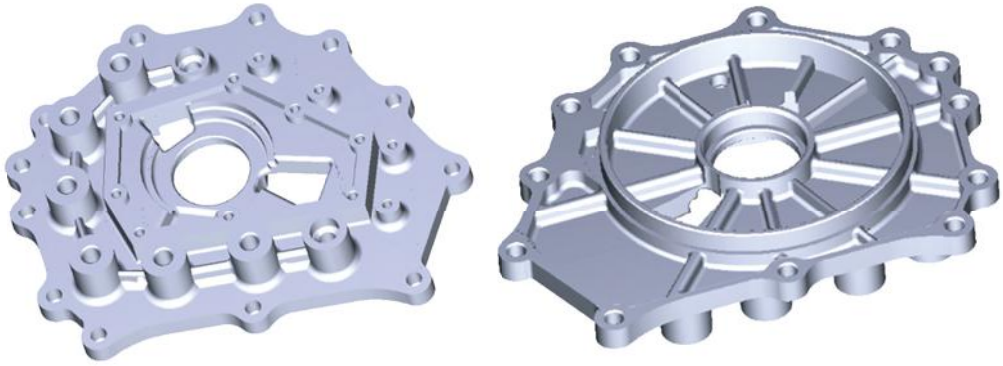



MAS

SOLID CARBIDE DRILL FOR ALUMINUM ALLOY AND CAST IRON

- Coolant through drill with burnishing effect
- 10° helix angle for excellent chip discharge
- 4 point support gives high hole accuracy
- Reduced noise drilling

FMAX

HIGH FEED FINISH MILLING CUTTER FOR ALUMINUM ALLOYS AND CAST IRONS

- Designed for high speeds
- Light weight, high rigidity body
- High precision, easy setting
- Inserts, PCD grades & CBN grades



EV PARTS

INVERTER CASE

The inverter case is the housing for electronic components that converts DC power to the AC power used in an electric vehicle motor. The inverter can change the speed at which the motor rotates by adjusting the frequency of the alternating current.

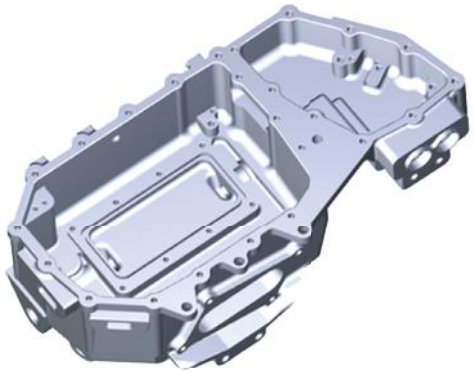

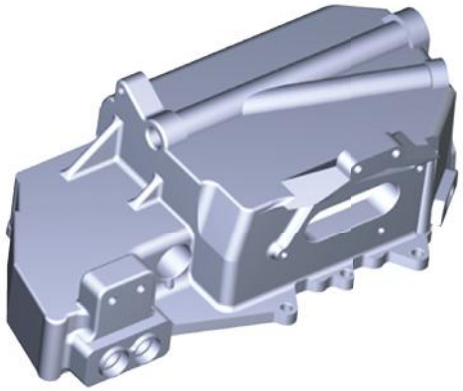



VPX

MULTI-FUNCTIONAL CUTTER FOR HIGH-EFFICIENCY MACHINING

- Improved chip evacuation
- Insert grades for a wide range of materials
- Large wiper flats for better surface finish
- Longer cutter body tool life

AQX

MULTI-FUNCTIONAL INDEXABLE INSERT MILL

- Heat resistant body
- Through coolant holes
- Undercut type standardized
- Economical short edge body type



EV PARTS

GEAR HOUSING

The gear housing is a mechanical housing that surrounds the mechanical components of a gear box. It provides mechanical support for the moving components, a mechanical protection from the outside world for those internal components, and a fluid-tight container to hold the lubricant that bathes those components

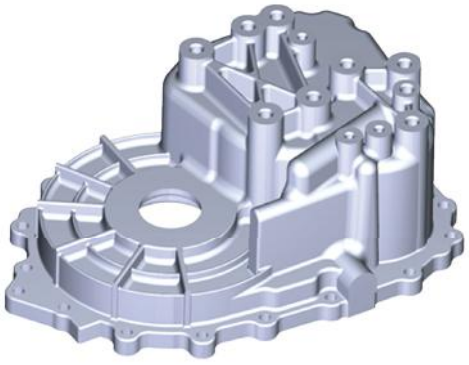

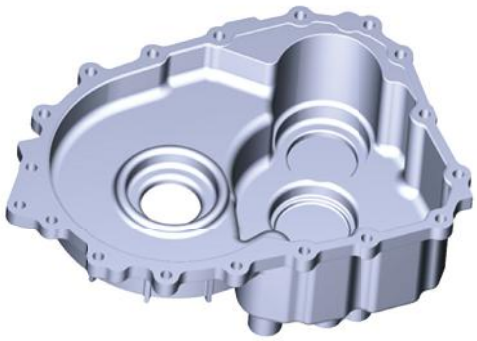



iMX MULTI-FUNCTIONAL CUTTER FOR HIGH-EFFICIENCY MACHINING

- Improved chip evacuation
- Insert grades for a wide range of materials
- Large wiper flats for better surface finish
- Longer cutter body tool life

ALIMASTER

HIGH EFFICIENCY MACHINING OF ALUMINUM ALLOYS

- Strengthened center cutting edges
- Helical coolant holes
- Ideal flute geometry
- Irregular helix and curved flute exit geometry



EV PARTS

MOTOR HOUSING

Motor housing is the equipment which protects the internal electric DC motor bodies from dust and damage. These motor housings also provides the motor a reliable and consistent functionality and a desirable performance.

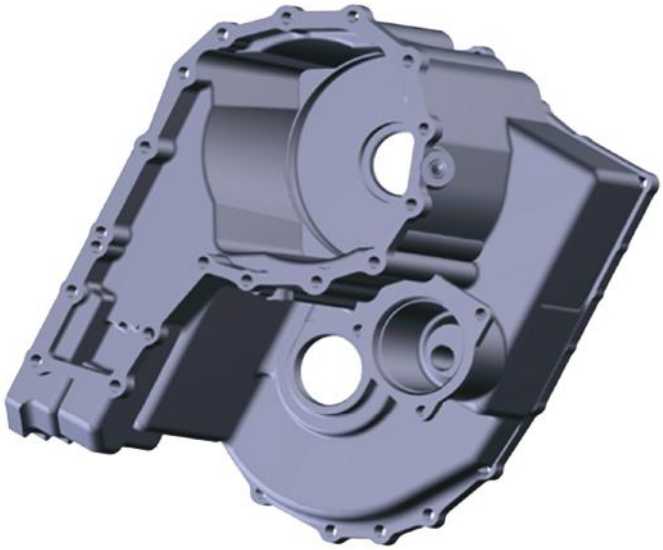



PCD DRILLS & END MILLS

HIGH-QUALITY CRAFTSMANSHIP PCD PRODUCTS

- Specially designed for machining non-ferrous applications
- Wide variety of standard and specialized tooling
- Full service custom designed to meet your requirements
- Irregular helix and curved flute exit geometry

MITSUBISHI MATERIALS U.S.A.

MITSUBISHI MATERIALS U.S.A. CORPORATION

California Office
(Headquarters)

3535 Hyland Avenue, Suite 200
Costa Mesa, CA 92626
Customer Service: 800.523.0800
Technical Service: 800.486.2341

Chicago Office
(Engineering)

300 N. Martingale Road, Suite 500
Schaumburg, IL 60173
Main: 847.252.6300
Fax: 847.519.1732

MMC Metal de Mexico, S.A. DE C.V.

Av. La Cañada No.16,
Parque Industrial Bernardo
Quintana, El Marques,
Queretaro C.P. 76246 MEXICO
Main: +52.442.221.61.36
Fax: +52.442.221.61.34

North Carolina-MTEC
(Marketing & Technical Center)

105 Corporate Center Drive, Suite A
Mooresville, NC 28117
Main: 980.312.3100
Fax: 704.746.9292

Toronto Office
(Canada Branch)

600 Matheson Blvd. Unit 5 (Office)
Mississauga, ON L5R 4C1
Main: 905.814.0240
Fax: 905.814.0245

Detroit Office
(Moldino CS)

41700 Gardenbrook Road, Suite 120
Novi, MI 48375
Main: 248.308.2620
Fax: 248.308.2627

FOR YOUR SAFETY

- Don't handle inserts and chips without gloves.
- Please machine within the recommended application range and exchange expired tools with new ones in advance of breakage.
- Please use safety covers and wear safety glasses.
- When using compounded cutting oils, please take fire precautions.
- When attaching inserts or spare parts, please use only the correct wrench or driver.
- When using rotating tools, please make a trial run to check run-out, vibration and abnormal sounds etc.

www.mmc-carbide.com/us

Tools specifications subject to change without notice.

MM.AUTOMOTIVE-US-2025