
ULTRAFLEX
Leader in Marine Product Innovation
2027

HIGHLIGHTS



V19 B/PG pag. 178



V56 B/PB pag. 198



GRITTI L B/SS pag. 238 - 239



GRITTI V B/B pag. 238 - 239



SPINOLA V B/PB pag. 229

ULTRAFLEX GROUP

92 years
1935-2027



1935 - 2027

Ultraflex Group has 92 years of experience in manufacturing and distributing the highest quality and most innovative products. The Ultraflex Group affiliate Companies that design and produce widely known equipments in the marine, industrial, architectural, Led technology and alternative energy fields.

ULTRAFLEX

Steering and control systems
for pleasure boats

UFLEX

Manufacturing of steering wheels and
distribution of technical marine accessories

UFLEX - Renewable Energy

Systems and accessories
for alternative energy applications

ULTRAFLEX CONTROL SYSTEMS

Window and skylight remote controls.
Building automation

INDUSTRIA di LEIVI

Mechanical remote controls
in the industrial field

UFLEX USA

Steering and control systems
for pleasure boats

QUALITY SYSTEM CERTIFICATION DNV·GL ISO 9001:2015

MANAGEMENT SYSTEM CERTIFICATION DNV·GL ISO 9001 = ISO 14001

CONFINDUSTRIA NAUTICA

MEMBER OF NMMA National Marine Manufacturers Association



ULTRAFLEX - Factory in Casella (GE)



UFLEX & ULTRAFLEX - Headquarter in Busalla (GE)



UFLEX - Factory in Tregnago (VR)



UCS - UFLEX - Factory in Borgo Fornari (GE)



IL - Factory in Leivi (GE)



UFLEX USA - Factory in Sarasota (FL)

Management System

The Ultraflex and Uflex Management Systems are certified in conformity with the UNI EN ISO 9001:2015 and UNI EN ISO 14001:2015 rules and involve all the company resources and processes starting from the design, in order to:

- Define and comply with the customer requirements
- Set up the actions to maintain and improve the quality standards constantly
- Pursue a continuous process improvement to meet the market needs, through research, innovation and developing prducts and processes.
- Maintain and verify conformity with ABYC requirements.
- Pursuing environmental protection, including pollution and continuous improvement aimed at environmental performance

GUARANTEE CONDITIONS AND EXCLUSIONS

Power A Mark II™. The “Power A Mark II™ - User and Installation Manual” describes activities, operations, technical specifications which must be followed during the installation and/or usage of the product, in order to keep a valid warranty. Descriptions and drawings in that manual are suitable to allow installation and use of the product to skilled persons. In case of doubt and/or for any information, please contact our Technical Service.

ULTRAFLEX mechanical, hydraulic and electronic steering systems

are all marked **CE** in compliance with the EEC Directive and marked **UKCA** in compliance with UK RCR (Recreational Craft Regulations) 2017, in conformity with the following harmonised standards:

- ISO 8848 for mechanical steering systems and steering cables
- ISO 23411 for steering wheels
- ISO 10592 for hydraulic steering systems
- ISO 25197 for Integra electronic steering systems
-

Electronic system components and engine start-up protection devices

are all marked **CE** in compliance with the EEC Directive EMC 2014/30/EU (electromagnetic compatibility), in conformity with EN 60495 standard and in conformity with ISO 11547 standard concerning requirements to prevent an outboard motor from being started in gear.

We kindly remind you that on the boats marked CE it is compulsory to install steering systems with components marked CE (see art. 4 and 5 of Directive 2013/53/EU).

We inform you the ULTRAFLEX guarantee is null and void if some ULTRAFLEX components are installed on a steering system together with products of other brands, with the exception of those brands clearly specified in our catalogue.

The descriptions and guidelines shown in this catalogue should be used as general reference only. For any further information please contact our Technical Service.



DNV

MANAGEMENT SYSTEM CERTIFICATE

Certificate no.: 248429-2017-AQ-ITA-ACCREDIA
Initial certification date: 08 April 2002
Valid: 21 November 2023 – 20 November 2026

This is to certify that the management system of
ULTRAFLEX S.p.A.
Via Crose, 2 - 16015 Casella (GE) - Italy
and the sites as mentioned in the appendix accompanying this certificate

has been found to conform to the Quality Management System standard:
ISO 9001:2015

This certificate is valid for the following scope:
Design and contructionof marine systems and accessories (IAF 18, 19)

Place and date:
Vimercate (MB), 17 October 2023

ACCREDIA
L'ENTE ITALIANO DI ACCREDITAMENTO

SGQ N° 023 A
SCA N° 033 D
SGE N° 007 M
SCR N° 004 F
EMAS N° 009 F
PRD N° 003 B
PRS N° 094 C
SSI N° 002 G

Membro di MLA EA per gli schemi di accreditamento SGQ, SGA, PRD, PRS, ISP, GHG, LAB e LAT, di MLA IAF per gli schemi di accreditamento SGQ, SGA, SSI, FSM e PRD e di MRA ILAC per gli schemi di accreditamento LAB, MRS, LAT e ISP

For the issuing office:
DNV - Business Assurance
Via Energy Park, 14, - 20871 Vimercate (MB) - Italy

Claudia Baroncini
Management Representative

Lack of fulfilment of conditions as set out in the Certification Agreement may render this Certificate invalid.
ACCREDITED UNIT: DNV Business Assurance Italy S.r.l., Via Energy Park, 14 - 20871 Vimercate (MB) - Italy - TEL: +39 68 99 905. www.dnv.it

DNV

MANAGEMENT SYSTEM CERTIFICATE

Certificate no.: 249264-2017-AE-ITA-ACCREDIA
Initial certification date: 27 January 2006
Valid: 26 January 2024 – 25 January 2027

This is to certify that the management system of
ULTRAFLEX S.p.A.
Via Crose, 2 - 16015 Casella (GE) - Italy
and the sites as mentioned in the appendix accompanying this certificate

has been found to conform to the Environmental Management System standard:
ISO 14001:2015

This certificate is valid for the following scope:
Design and construction of mechanical, hydraulic and electronic systems and accessories for nautical, through electromechanical assembly, mechanical machining and plastic molding (IAF 18, 19)
Evaluated according to the requirements of Technical Regulations RT-09

Place and date:
Vimercate (MB), 27 December 2023

ACCREDIA
L'ENTE ITALIANO DI ACCREDITAMENTO

SGQ N° 023 A
SCA N° 033 D
SGE N° 007 M
SCR N° 004 F
EMAS N° 009 F
PRD N° 003 B
PRS N° 094 C
SSI N° 002 G

Membro di MLA EA per gli schemi di accreditamento SGQ, SGA, PRD, PRS, ISP, GHG, LAB e LAT, di MLA IAF per gli schemi di accreditamento SGQ, SGA, SSI, FSM e PRD e di MRA ILAC per gli schemi di accreditamento LAB, MRS, LAT e ISP

For the issuing office:
DNV - Business Assurance
Via Energy Park, 14, - 20871 Vimercate (MB) - Italy

Claudia Baroncini
Management Representative

Lack of fulfilment of conditions as set out in the Certification Agreement may render this Certificate invalid.
ACCREDITED UNIT: DNV Business Assurance Italy S.r.l., Via Energy Park, 14 - 20871 Vimercate (MB) - Italy - TEL: +39 68 99 905. www.dnv.it

Ultraflex products are guaranteed against defects in material or workmanship for a period of two years following the date of manufacture. If the Ultraflex products are installed and used on commercial boats the guarantee is limited to one year following the date of manufacture.

Defective products should be returned freight prepaid to the Ultraflex facility and must be accompanied by an Ultraflex issued Return Goods Authorization number.
Upon receipt, the product will be examined to determine the cause of defect. If the product is determined to have a defect in workmanship or material, it will be repaired or replaced at the Ultraflex discretion.
This guarantee does not cover labor.
This guarantee does not cover products that have been misinstalled or misapplied. Furthermore, it does not cover claims for direct or indirect damage.
We decline liability and exclude guarantee if products are improperly installed, misapplied, or misused.

Our products are not intended to be used in racing applications, therefore this guarantee does not cover our products if they are used for racing purposes.

Ultraflex S.p.A. declines any liability for possible mistakes in this catalogue due to printing errors. Ultraflex S.p.A. reserves the right to make those modifications that are considered to be suitable for its products.

Publishing rights, trade marks, part numbers and photographs of the Ultraflex products present on this catalogue are Ultraflex property and all rights are reserved.

The descriptions and guidelines shown in this catalogue should be used as general reference only.

For any further information please contact our Technical Service.

INDEX


MANAGEMENT SYSTEM CERTIFICATE

This is to certify that the management system of

ULTRAFLEX S.p.A. - Sede Legale e Operativa
Via Cross, 2 - 16015 Casella (GE) - Italy
and the sites as mentioned in the appendix accompanying this certificate

has been found to conform to the Quality Management System standard:
ISO 9001:2015

This certificate is valid for the following scope:
Design and contructionof marine systems and accessories (IAF 18, 19)

CERTIFICATIONS AND GUARANTEE CONDITIONS *page 6 to 7*



MECHANICAL STEERING SYSTEMS *page 13 to 38*

Selecting a mechanical steering system *page 14 to 17*

Standard mechanical rotary steering systems *page 18 to 22*

High performance mechanical rotary steering systems *page 23 to 27*

Rack and pinion mechanical steering systems *page 28 to 33*

Mounting bezels for mechanical steering systems *page 34*

Packaged mechanical steering systems *page 35*

Accessories for mechanical steering systems *page 36 to 38*



OUTBOARD AND STERNDRIVE HYDRAULIC STEERING SYSTEMS — page 39 to 104

- Packaged outboard hydraulic steering systems — page 40 to 42
- Selecting an outboard hydraulic steering system - cross reference — page 43 to 47
- Steering wheel postion adjustment systems (Tilt mechanisms) — page 48 to 49
- Standard outboard hydraulic steering systems — page 50 to 69
- SilverSteer™ High performance outboard hydraulic steering systems — page 70 to 81
- Tie bars for outboard engines — page 82 to 89
- MasterDrive Power assisted outboard steering systems — page 90 to 99
- Sterndrive steering systems — page 100 to 101
- Accessories and fittings for outboard and sterndrive hydraulic steering systems — page 102 to 105



BubbleBuster™ AUTOMATIC FILLING AND PURGING SYSTEM — page 106

INDEX

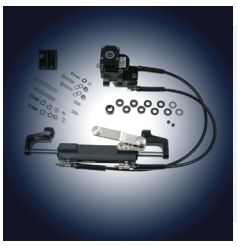

ZERO TORQUE FEEDBACK TILLER STEERING SYSTEMS *page 107 to 110*



INTEGRA™ - OUTBOARD ELECTRONIC POWER STEERING SYSTEMS *page 111 to 152*

INTEGRA EPS and INTEGRA JS Electronic steering systems *page 112 to 139*

INTEGRA equipped with UPA123 actuator *page 140 to 152*



INBOARD HYDRAULIC STEERING SYSTEMS *page 153 to 166*

Selecting an inboard hydraulic steering system *page 154 to 155*

Inboard hydraulic steering systems *page 156 to 163*

Packaged inboard hydraulic steering systems *page 164*

MASTERDRIVE Power assisted inboard steering system *page 165 to 166*



INTEGRA™ - INBOARD ELECTRONIC POWER STEERING SYSTEMS *page 167 to 178*



STEERING WHEELS — page 179 to 210

- **Composite steering wheels** — page 180 to 181
- **Soft touch grip steering wheels** — page 182 to 185
- **Polyurethane grip steering wheels** — page 186 to 194
- **Wood grip steering wheels** — page 195
- **Equidistant spokes steering wheels** — page 196 to 210



“VERO VOLANTE ITALIANO” STEERING WHEELS — page 211 to 278

- **Polyurethane, vynil or leather grip steering wheels** — page 212 to 255
- **Stainless steel grip steering wheels** — page 256 to 265
- **Fiber carbon grip steering wheel** — page 266 to 269
- **QDH - Quick disconnect hub, wheel accessories and knobs** — page 270 to 271

INDEX

Wheel accessories application guide — page 272 to 273

Paddle Trim — page 274 to 275

Handles and Steering Wheel Maintenance — page 276 to 278



Power A Mark II™
ELECTRONIC CONTROL SYSTEM — page 279 to 290



MECHANICAL AND HYBRID CONTROL SYSTEMS — page 291 to 330

Engine control box selection — page 292 to 293

Mechanical and hybrid Single lever engine controls — page 294 to 317

Two-lever engine controls and accessories for control boxes — page 318 to 325

Engine control cables and accessories — page 326 to 330

SPARE PARTS — page 331 to 334



MECHANICAL STEERING SYSTEMS
Suggestions and warnings

Selecting a mechanical steering system

Selection of the appropriate mechanical steering system is an important factor for the safety and functionality of your boat.
The combination of engine power, hull type and boat speed influence the correct selection of the steering system.
The load on the steering system increases with the boat speed and engine power; the torque generated by the propeller rotation in high power outboard applications can make it hard to steer.

Big boats with displacement hulls and inboard or non power assisted stern drive engines, can generate high rudder loads: in these cases a mechanical steering system will be inadequate and we suggest the use of an Ultraflex hydraulic steering system.

We always recommend consulting qualified personnel when selecting, installing and maintaining a steering system for your boat.

Advantages of a Planetary Gear Design

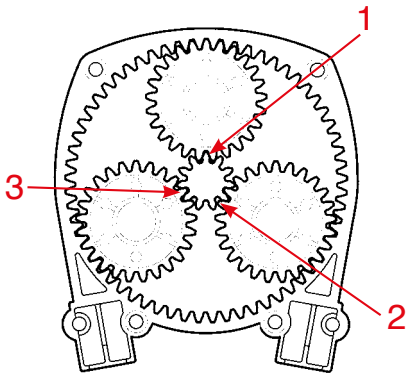

Ultraflex mechanical steering helms T71FC, T73NRFC, T91, T93ZT as well as dual cable versions and tilt wheel versions use a **Planetary Gear Design**.
A Planetary Gear Design has three satellite gears that rotate on their axis and at the same time rotate around the central helm axis. This allows for equal distribution of engine torque over three points of the central gear, dividing and balancing the system loads.
The benefits of this special design are increased system longevity, increased efficiency and less engine feedback compared to single pinion gear helms.

Efficiency comparison tests

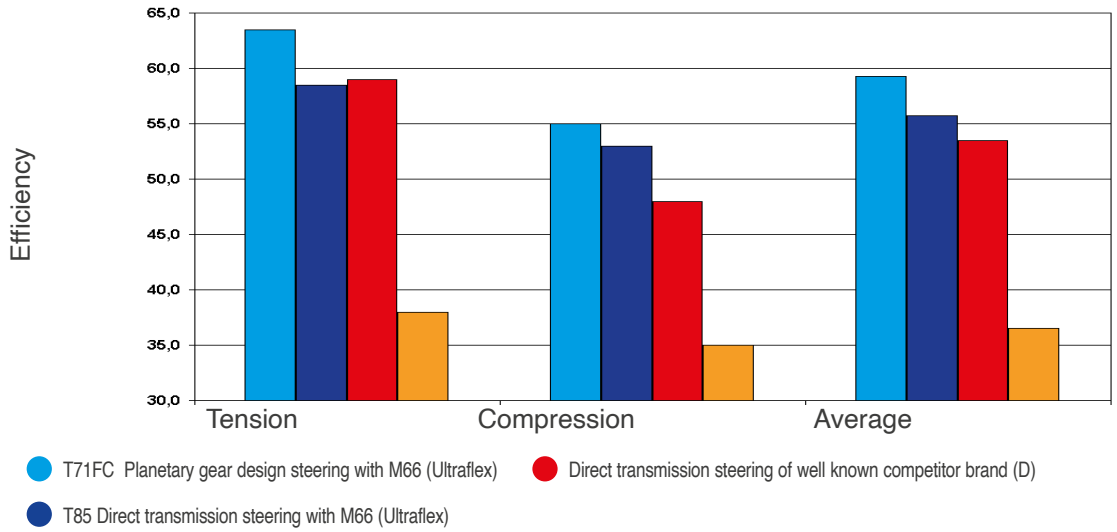

Test configuration 3 bends at 90°; 1000N load

NOTE: indicated figures have been obtained after 500 cycles of running from samples bought from after-market sources

The importance of Zero torque steering system for increased safety



The steering system of a boat is the mechanism that determines the boat direction when the steering wheel is turned.

If, for any circumstance, the driver does not hold the steering wheel, a dangerous situation may occur caused by a sudden change of direction of the boat due to external forces (waves, currents, etc.) or internal forces such as rudder torque originated by the way of rotation of the propeller.
Engine torque usually generates a load on the steering system that must be continually compensated for by the driver even when the boat is going straight.
The additional effort by the driver to maintain a true course can often cause fatigue.

With **Ultraflex Zero torque** steering helms T73NRFC, T83NRFC, TM87SSZT, TM87OZT, T93ZT, T103ZT, the loads applied to the steering system are no longer a problem.

A special patented device allows the helm shaft to lock until turned by the driver, maintaining the boat direction and neutralizing the feedback loads on the steering cable.
This mechanism is engaged when the driver is not turning the wheel and is automatically disengaged as soon as the driver applies pressure on the wheel to change direction of the boat.

The **Ultraflex Zero torque** mechanism makes driving a boat safer and easier.

Use and Maintenance

The steering cable must be installed avoiding excessive and/or tight bends. This will provide the driver with easy handling at all speed, helping to reduce inefficiency and excess play in the system.

Marine corrosion may cause the materials to deteriorate affecting maneuvering efficiency and in the worst case, system failure. By following the engine manufacturer specifications, the steering cable end fittings and the engine cable support must be cleaned and greased periodically; these simple operations minimize wear and corrosion in the system.

The steering cable must be regularly inspected. If steering becomes hard, inconsistent, cuts on the conduit surface are noticed, or any other component found damaged, the cable must be replaced immediately.

When storing your boat for an extended period of time we recommend removing the steering cable end fitting from its engine side support and cleaning it adequately.

Warning:

An **Emergency Safety Switch** to unpower the engine is highly recommended in any type of application

SELECTION OF STEERING SYSTEM
and cable length measurement

- Speed, hull, horsepower, engine type, displacement and size are major factors in boat performance and handling characteristics. The above selection guide should be used as a general reference only.
- One of the major factors in selecting a steering system is proper cable length.
  Due to specific routing in each boat, these approximate lengths will vary. Final selection should be made with the assistance of a qualified technician.
- Ultraflex mechanical steering systems should not be used on boats equipped with engines that exceed the maximum horsepower rating of the boat.

APPLICATIONS	ENGINE POWER	STEERING SYSTEM	
OUTBOARD 	up to 40 kW (55cv)	T67	Ultraflex hydraulic steering systems are recommended for boats that exceed 50 mph. Always follow engine manufacturer's instructions.
	BOAT LENGTH		
	up to 30' (9m)	T85 - T71FC - T81FC - T73NRFC - T83NRFC - TM87O - T91 T93ZT - T101 - T103ZT	
		Twin cable rotary steering systems	
INBOARD 	up to 35' (10.5m)	T71FC - T81FC - T73NRFC - T83NRFC - TM87O - T91 - T93ZT - T101 - T103ZT	
		Twin cable rotary steering systems	
STERNDRIVE POWER ASSISTED 		T85 T71FC - T81FC - TM87O - T91 - T101	
		Twin cable rotary steering systems	
JET BOATS or SKI BOATS 		TM87J (jet boats) TM87SS (ski boats)	

NOTE: sterndrive engines not equipped with power steering can create very high steering loads. Our hydraulic steering systems are recommended for these type of boats. For any further information please contact our Technical Service Department.

How to measure for new steering cable installation

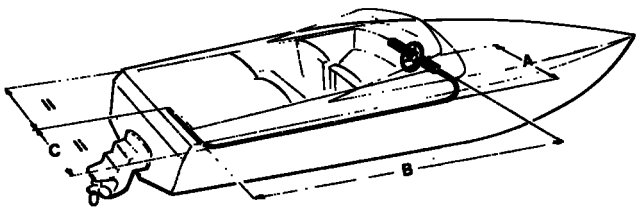

Add. A + B + C and subtract 10 cm (4") for each 90° bend in the cable.
For installation through the engine tilt tube, add 30,5 cm (1 ft) to the measure calculated above.
To order in foot length, divide by 30,5 and round off to next whole foot.

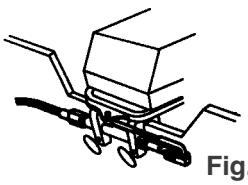
Fig. 1

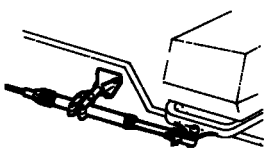
Fig. 2

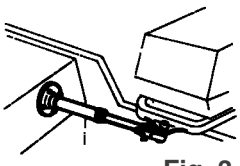
Fig. 3

TILT TUBE MOUNTING - Fig. 1
Example (dimensions in cm):
A (50) + B (250) + C (80) = 380 - 20 for two 90° bends = 360 + 30,5
For a thru-tube installation 390,5 cm : 30,5 = 12,8 ft; round off to 13 ft

TRANSOM SUPPORT OR SPLASHWELL MOUNTING - Fig. 2-3
Example (dimensions in cm):
A (50) + B (250) + C (80) = 380 - 20 for two 90° bends = 360: 30,5 = 11,8 ft; round off to 12 ft

REPLACEMENT STEERING CABLES

ULTRAFLEX REPLACEMENT STEERING CABLE	STEERING HELM	ADAPTOR REQUIRED
M58 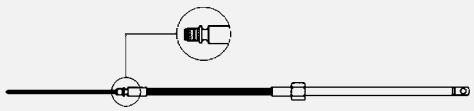	T67 Ultraflex® C230/C231 Morse® Compac - T® Teleflex®	none
M66 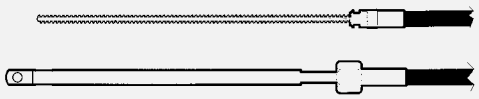	T85 - T71FC - T72FC - T73NRFC T81FC - T83NRFC - Ultraflex Safe - TQC - NFB Safe -TII - NFB 4.2® Teleflex® - D290 Morse®	none
	T71 - T72 - T73NR - T81 - T83NR Ultraflex (Discontinued)	**K66** - 1A0038432Q 
M90 Mach 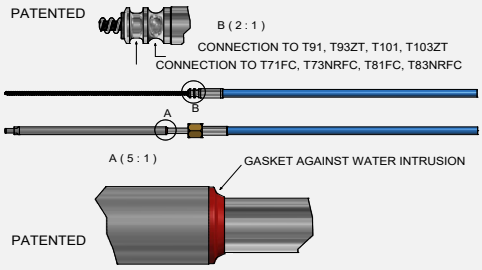	T91 - T93ZT T101 - T103ZT T85 - T71FC - T72FC - T73NRFC T81FC - T83NRFCUltraflex Safe - TQC® - NFB Safe TII® NFB 4.2® Teleflex® - D290 Morse®	none
TM87O 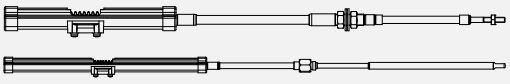	G87 - G87ZT - G89 - G89ZT Ultraflex. (Uncompatible with TM86) TM87O compatible with Teleflex® SSC134, SSCX154	none
TM87SS 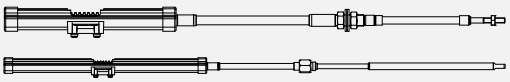	G87 - G87ZT - G89 - G89ZT Ultraflex.	none
TM87J 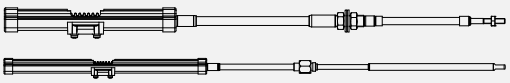	G87 - G89 Ultraflex TM87J compatible with Teleflex® SSC145, SSC146	none
TM86 - DISCONTINUED 	G86 ; G88NR ; G96 ; G98NR Ultraflex. (Not compatible with TM87J and TM87O and TM87SS)	none
	NOTE: Will not work with dual cable helms	

Warnings:

We inform you the ULTRAFLEX guarantee is null and void if some ULTRAFLEX components are installed on a steering system together with products of other brands, with the exception of those brands clearly specified in the above chart.

How to measure for replacement steering cables

ORDER LENGTH: "D" dimension + 56 cm
To order in foot length, divide for 30,5 and round up tp the next whole foot.

Example: D= 305 cm + 56 cm= 361 : 30,5 = 11'8". Round up to 12 ft.

D = Conduit length



T67
Rotary steering system





T67



T67W

- All stainless steel output end of cable as per ABYC P17 safety standards
- Made of corrosion resistant materials
- Standard friction externally adjustable
- Four optional helm positions to facilitate steering cable installation
- Available in package with ROTECH-IV
- Exceeds ISO 8848 safety standards
- Exceeds ABYC P17 safety standards

- **APPLICATIONS**: for use with outboard engines up to 40 kW (55 hp) with the exception of EVINRUDE E-TEC™ 50 where the use of T85, T71FC or T91 is recommended

COMPONENTS - TO BE ORDERED SEPARATELY

Model	Part No.	Description
T67	1A0035809J	Steering helm with friction and black bezel
T67W	1A0037925M	Steering helm with friction and white bezel
M58	-	Steering cable
Steering wheel	-	See steering wheels section
Accessories	-	See accessories section

Installation	90°
M58 steering cable stroke	230 mm (9”)
Lock-to-lock steering wheel turns	approx 2,5
Max. steering wheel diameter	380 mm (15”)
Min. steering cable bend radius	200 mm (7.87”)

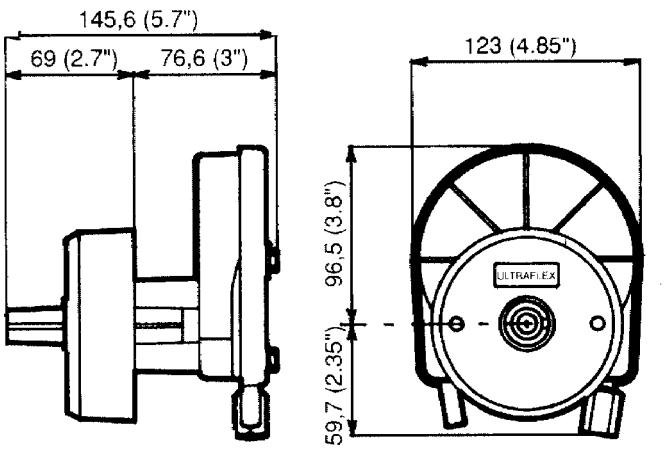

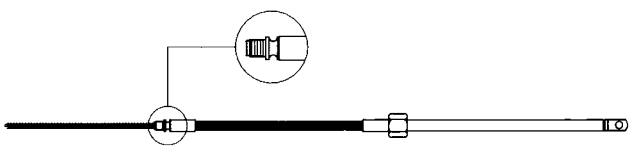

M58



T85

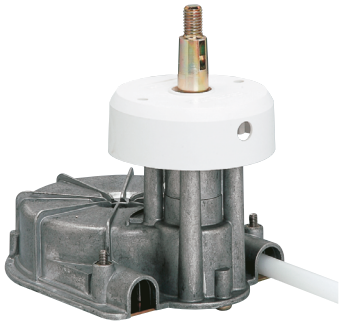

T85W



- All stainless steel cable output ends
- Made of corrosion resistant materials
- Particularly suitable where clearance is limited
- Minimal feedback
- T85 steering system is not to be used on boats equipped with engines that exceed the maximum horsepower rating of the boat
- Exceeds ISO 8848 safety standards
- Exceeds ABYC P17 safety standards

COMPONENTS - TO BE ORDERED SEPARATELY

Model	Part No.	Description
T85	1A0038439Z	Steering helm with black bezel
T85W	1A0039213M	Steering helm with white bezel
M66 or M90 Mach	-	Steering cable
Steering wheel	-	See steering wheels section
Accessories	-	See accessories section

Installation	90°
M66 steering cable stroke	228 mm (9”)
Lock-to-lock steering wheel turns	approx 3
Max. steering wheel diameter	406 mm (16”)
Min. steering cable bend radius	200 mm (7.9”)

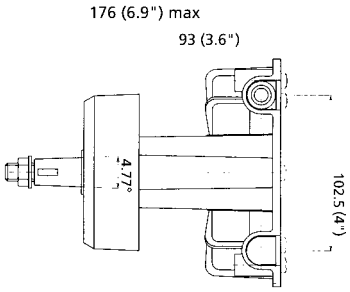

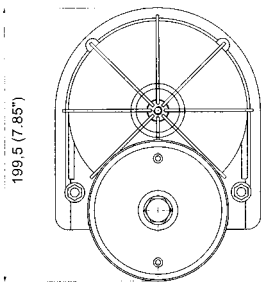

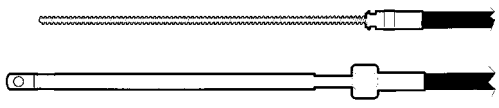

M66

T71FC - T72FC
Rotary steering systems



Planetary
Gear Design

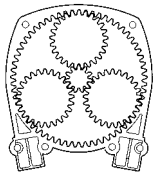

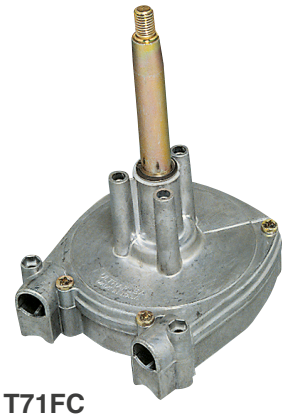

T71FC

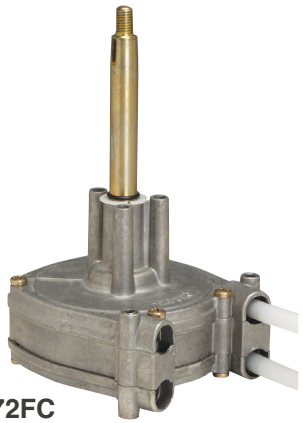

T72FC

- Fast connect, simple installation
- All stainless steel cable output ends
- Made of corrosion resistant materials
- Standard 3/4″ tapered shaft
- Minimal feedback
- T71FC and T72FC steering systems are not to be used on boats equipped with engines that exceed the maximum horsepower rating of the boat
- For boats faster than 50 mph our hydraulic steering systems are recommended
- T71 is available in package with ROTECH-I
- Exceeds ISO 8848 safety standards
- Exceeds ABYC P17 safety standards

NOTE
T72FC steering system requires 2 cables

COMPONENTS - TO BE ORDERED SEPARATELY

Model	Part No.	Description
T71FC	1A0038867H	Single cable steering Helm
T72FC	1A0038868K	Dual cable steering Helm
X34	1A0036654B	Black bezel, 90° mounting
X34W	1A0040654C	White bezel, 90° mounting
X91	1A0042850N	Chrome plated bezel, 90° mounting
X35	1A0036655C	Black bezel, 20° mounting
M66 or M90 Mach	-	Steering cable
Steering wheel	-	See steering wheels section
Accessories	-	See accessories section

Installation	90° or 20°
M66 - M90 Mach steering cable stroke	228 mm (9”)
Lock-to-lock steering wheel turns	approx 3,8
Max. steering wheel diameter	406 mm (16”)
Min. steering cable bend radius	200 mm (7.9”)

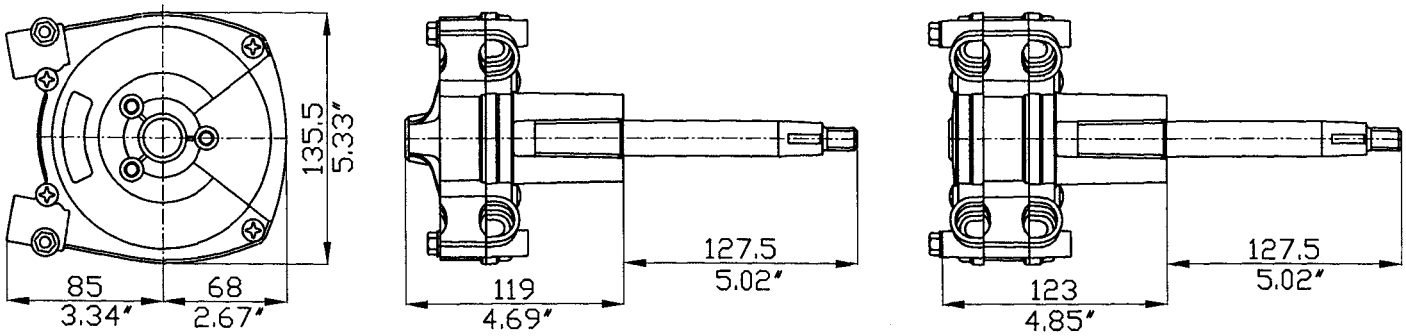

T73NRFC
Zero torque rotary steering system



Planetary
Gear Design

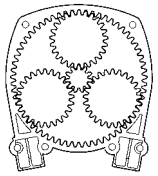

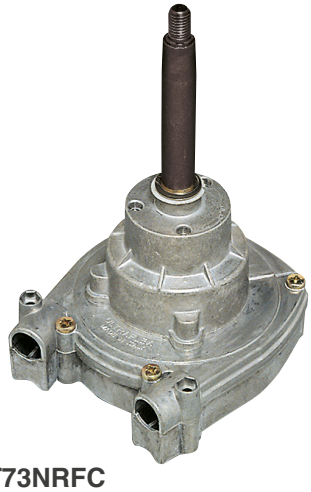

T73NRFC

- Easy and safe steering: a patented zero torque mechanism eliminates the continuous load on the driver caused by the propeller torque
- Fast connect, simple installation
- Most suitable where clearance is limited
- Ideal for outboards and surfacing propellers
- Standard 3/4" tapered shaft
- All stainless steel cable output ends
- Made of corrosion resistant materials
- T73NRFC steering system is not to be used on boats equipped with engines that exceed the maximum horsepower rating of the boat
- For boats faster than 50 mph our hydraulic steering systems are recommended
- T73NRFC is available in package with ROTECH-III
- Exceeds ISO 8848 safety standards
- Exceeds ABYC P17 safety standards

COMPONENTS - TO BE ORDERED SEPARATELY

Model	Part No.	Description
T73NRFC	1A0038869M	Zero torque single cable steering helm
X34	1A0036654B	Black bezel, 90° mounting
X34W	1A0040654C	White bezel, 90° mounting
X91	1A0042850N	Chrome plated bezel, 90° mounting
X35	1A0036655C	Black bezel, 20° mounting
M66 or M90 Mach	-	Steering cable
Steering wheel	-	See steering wheels section
Accessories	-	See accessories section

Installation	90° or 20°
M66 - M90 Mach steering cable stroke	228 mm (9")
Lock-to-lock steering wheel turns	approx 3,8
Max. steering wheel diameter	406 mm (16")
Min. steering cable bend radius	200 mm (7.9")

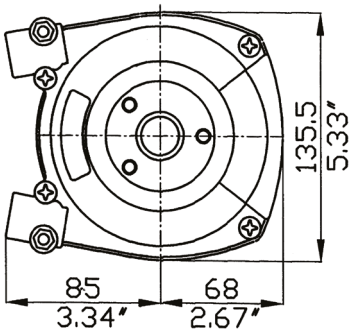

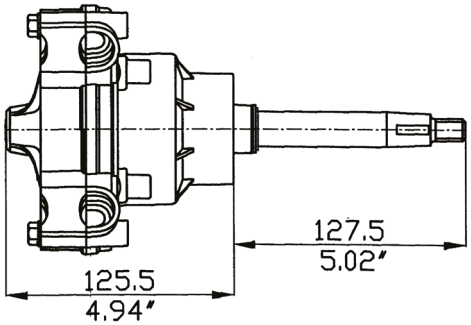

T81FC - T83NRFC (zero torque)
Rotary tilt steering systems



T81FC with X82

Planetary
Gear Design

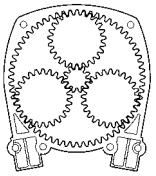



X82

- Tilt range of 48° and five locking positions
- Fast connect, simple installation
- Tilt device eliminates underdash movement
- Standard 3/4” tapered shaft – stainless steel
- All stainless steel cable output ends
- Made of corrosion resistant materials
- T81FC and T83NRFC steering systems are not to be used on boats equipped with engines that exceed the maximum horsepower rating of the boat
- X82 tilt mechanism fits Ultraflex tilt mount rotary and rack and pinion steering helms as well as Ultraflex tilt mount hydraulic pumps except SilverSteer™ and MasterDrive™steering systems
- For boats faster than 50 mph our hydraulic steering systems are recommended
- Exceeds ISO 8848 safety standards
- Exceeds ABYC P17 safety standards

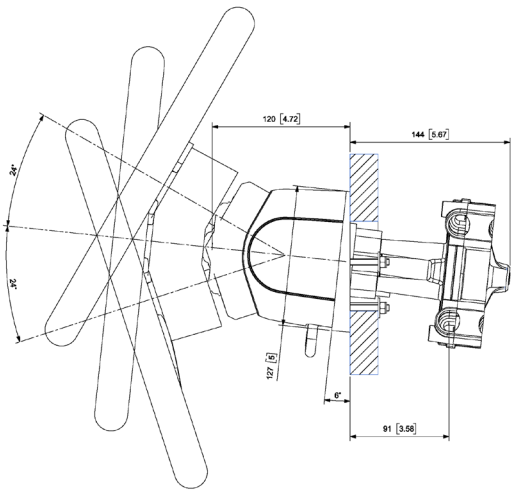

COMPONENTS - TO BE ORDERED SEPARATELY

Model	Part No.	Description
T81FC	1A0038957J	Single cable steering helm
T83NRFC	1A0038959N	Zero totque single cable steering Helm
X82	1A0043187N	Tilt mechanism
M66 or M90 Mach	-	Steering cable
Steering wheel	-	See steering wheels section
Accessories	-	See accessories section

Installation	with Tilt X82
M66 - M90 Mach steering cable stroke	228 mm (9”)
Lock-to-lock steering wheel turns	approx 3,8
Max. dash depth	25,4 mm (1”)
Max. steering wheel diameter	406 mm (16”)
Min. steering cable bend radius	150 mm (5.9”)

T91
High Performance rotary steering system



T91 high performance



T91with X91 bezel

Planetary
Gear Design

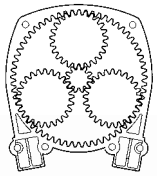



M90 Mach
(Patented)

- Specifically designed for high performance and high efficiency applications
- M90 Mach cable (patented): performance, flexibility and durability increased by top quality materials and construction.
- Fast connect, simple installation, patented end fitting.
- Stainless steel cable output end featuring patented gasket, engine side
- Made of corrosion resistant materials
- Particularly suitable when clearance is limited.
- Standard 3/4" tapered shaft
- Minimal feedback
- T91 steering system is not to be used on boats equipped with engines that exceed the maximum horsepower rating of the boat
- For boats faster than 50 mph our hydraulic steering systems are recommended
- T91 is also available in package with FOURTECH-I
- Exceeds ISO 8848 safety standards
- Exceeds ABYC P17 safety standards

COMPONENTS - TO BE ORDERED SEPARATELY

Model	Part No.	Description
T91	1A0042647S	Single cable steering helm
X34	1A0036654B	Black bezel, 90° mounting
X34W	1A0040654C	White bezel, 90° mounting
X91	1A0042850N	Chrome plated bezel, 90° mounting
X90	1A0042646P	Chrome plated bezel, 90° mounting with lock device
X35	1A0036655C	Black bezel, 20° mounting
M90 Mach	-	Steering cable
Steering wheel	-	See steering wheels section
Accessories	-	See accessories section

Installation	90° or 20°
M90 Mach steering cable stroke	228 mm (9")
Lock-to-lock steering wheel turns	approx 4,2
Max. steering wheel diameter	406 mm (16")
Suggested steering cable bend radius	200 mm (7.87")
Min. steering cable bend radius	150 mm (5.9")

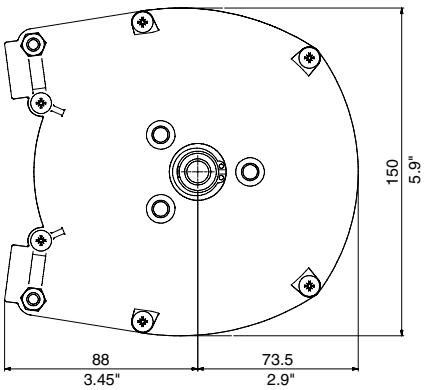

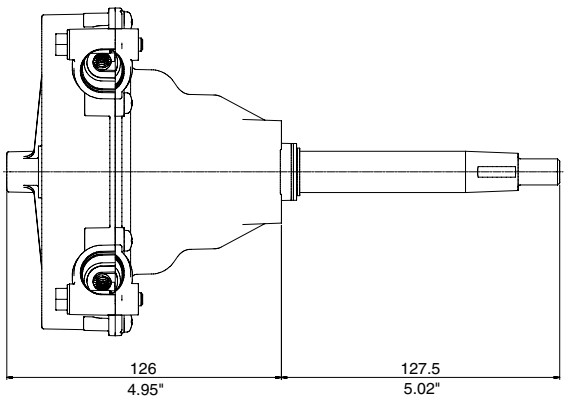

T93ZT (zero torque)
High performance rotary steering systems zero torque



T93ZT high performance



T93ZT with X91 bezel

Planetary Gear Design

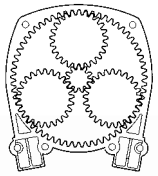



M90 Mach (Patented)

- Specifically designed for high performance and high efficiency applications
- M90 Mach cable (patented): performance, flexibility and durability increased by top quality materials and construction.
- Fast connect, simple installation, patented end fitting.
- Stainless steel cable output end featuring patented gasket, engine side
- Made of corrosion resistant materials
- Particularly suitable when clearance is limited.
- Standard 3/4” tapered shaft
- Minimal feedback
- T93ZT steering system is not to be used on boats equipped with engines that exceed the maximum horsepower rating of the boat
- For boats faster than 50 mph our hydraulic steering systems are recommended
- T93ZT is also available in package with FOURTECH-II
- Exceeds ISO 8848 safety standards
- Exceeds ABYC P17 safety standards

COMPONENTS - TO BE ORDERED SEPARATELY

Model	Part No.	Description
T93ZT	1A0042648U	Zero torque single cable steering helm
X34	1A0036654B	Black bezel, 90° mounting
X34W	1A0040654C	White bezel, 90° mounting
X91	1A0042850N	Chrome plated bezel, 90° mounting
X90	1A0042646P	Chrome plated bezel, 90° mounting with lock device
X35	1A0036655C	Black bezel, 20° mounting
M90 Mach	-	Steering cable
Steering wheel	-	See steering wheels section
Accessories	-	See accessories section

Installation	90° or 20°
M90 steering cable stroke	228 mm (9”)
Lock-to-lock steering wheel turns	approx 4,2
Max. steering wheel diameter	406 mm (16”)
Suggested steering cable bend radius	200 mm (7.87”)
Min. steering cable bend radius	150 mm (5.9”)

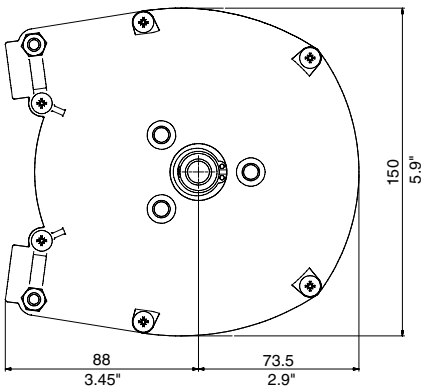

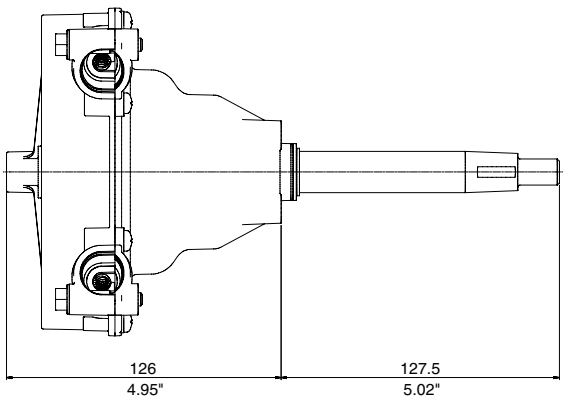

T101 - T103ZT (zero torque)
High performance tilt steering systems

Planetary
Gear Design



T101 high performance



T101 shown with X82 tilt mechanism



T103ZT high performance

- Specifically designed for high performance and high efficiency applications
- M90 Mach cable (patented): performance, flexibility and durability increased by top quality materials and construction.
- Tilt range of 48° and five locking positions
- Fast connect, simple installation, patented end fitting.
- Tilt device eliminates underdash movement
- Standard 3/4” tapered shaft – stainless steel
- Engine side stainless steel cable output end featuring patented gasket
- Made of corrosion resistant materials
- T101 and T103ZT steering system is not to be used on boats equipped with engines that exceed the maximum horsepower rating of the boat
- For boats faster than 50 mph our hydraulic steering systems are recommended
- Exceeds ISO 8848 safety standards
- Exceeds ABYC P17 safety standards

COMPONENTS - TO BE ORDERED SEPARATELY

Model	Part No.	Description
T101	1A0042839B	Single cable steering helm
T103ZT	1A0042840K	Zero torque single cable steering helm
X82	1A0043187N	Tilt mechanism
M90 Mach	-	Steering cable
Steering wheel	-	See steering wheels section
Accessories	-	See accessories section

Installation	with Tilt X82
M90 steering cable stroke	228 mm (9”)
Lock-to-lock steering wheel turns	approx 4,2
Max. steering wheel diameter	406 mm (16”)
Tilt mechanism- X82	Not included - to be ordered separately
Suggested steering cable bend radius	200 mm (7.87”)
Min. steering cable bend radius	150 mm (5.9”)

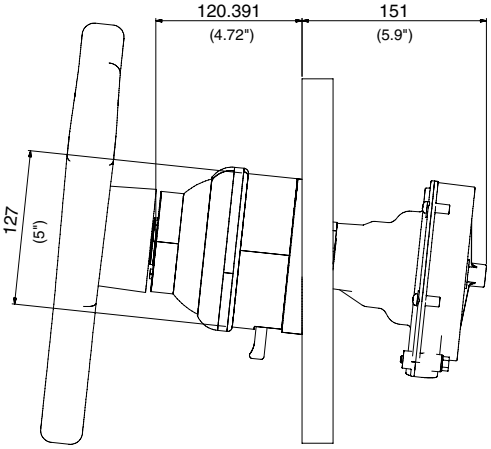

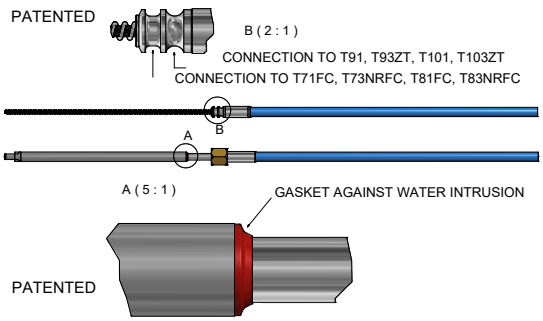

M90
High efficiency and flexibility steering cable

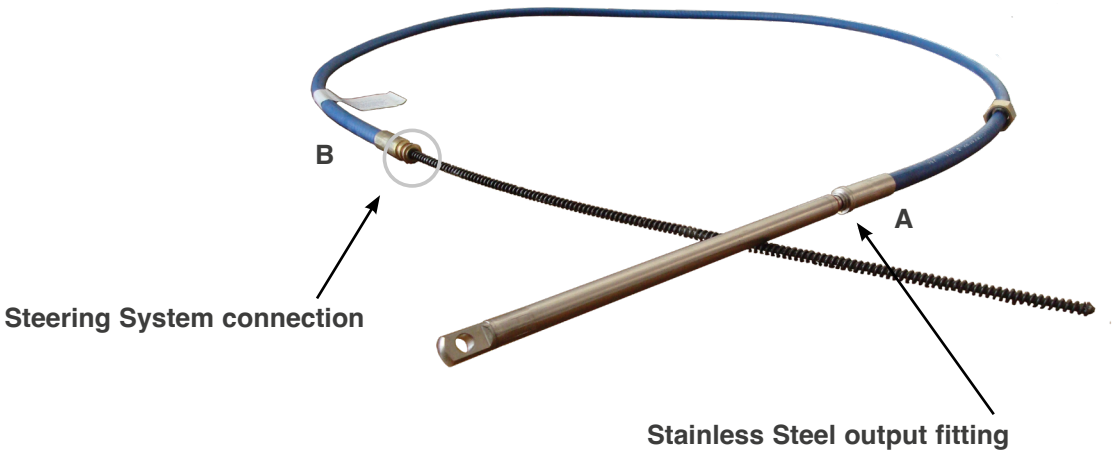

PATENTED

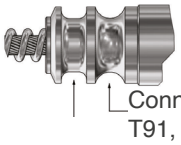

Connection to:
T71FC, T73NRFC,
T81FC, T83NRFC

Connection to:
T91, T93ZT, T101, T103ZT

GASKET AGAINST WATER INTRUSION

PATENTED

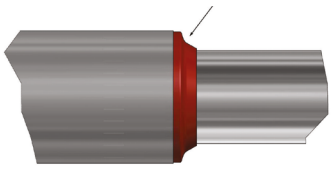

Specifically designed for high performance and high efficiency applications, M90 Mach cable (patented) offers increased flexibility and durability by top quality materials and construction.

- Ideal solution for long cable runs and tight bend applications
- Corrosion resistant materials, stainless steel engine side output fitting
- Minimal feedback
- Fast connect, simple installation, patented end fitting
- Stainless steel cable output end featuring **patented gasket**, engine side

WARNING:
M66 cable will **not** fit the following steering systems: T91, T93ZT, T101, T103ZT

Min. steering cable bend radius	150 mm (5.9”)
Suitable for use with	T91, T93ZT, T101, T103ZT, T71FC, T72FC, T73NRFC, T74NRFC, T81FC, T82FC, T83NRFC, T85.

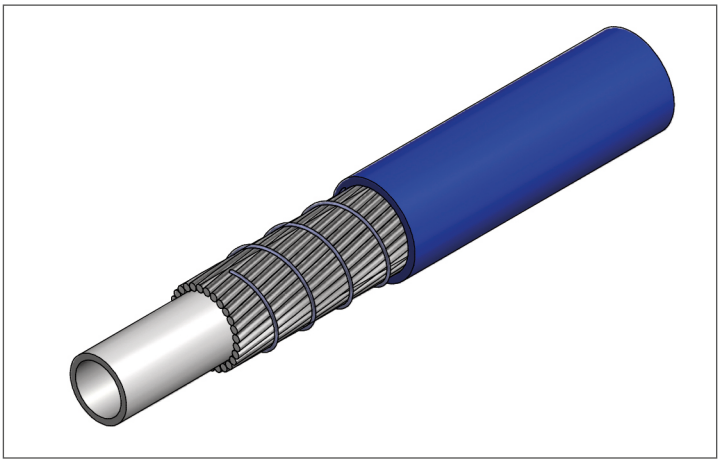

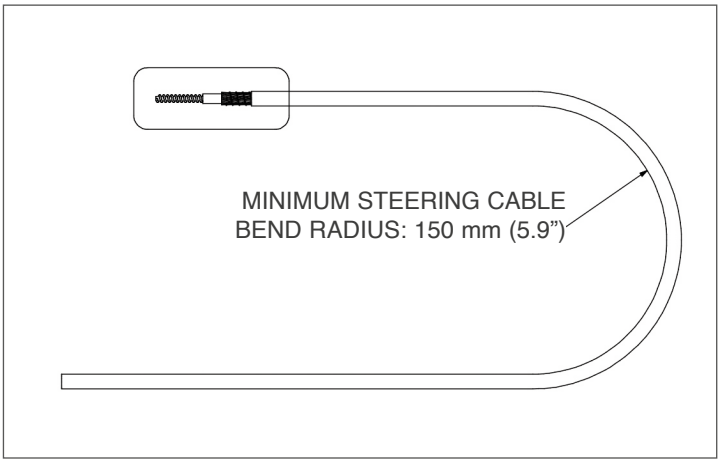

T91 -T93ZT (zero torque)
High Performance steering systems - Torque Comparison

Backlash on the steering system comparison

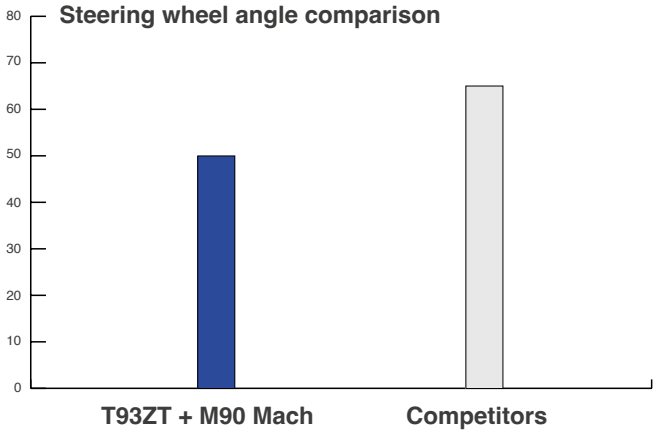

The quality of a mechanical steering system depends on its efficiency (less driving effort) in push & pull load and low backlash on the steering wheel.

Ultraflex **T91** and **T93ZT** steering systems, fitted with the **M90 Mach** single-cable, are the best mechanical steering sstems on the market today. They combine a minimal backlash with higher efficiency and they guarantee results with very narrow cable bends.

Torque comparison with Push & Pull load - radius 200m

Push load:

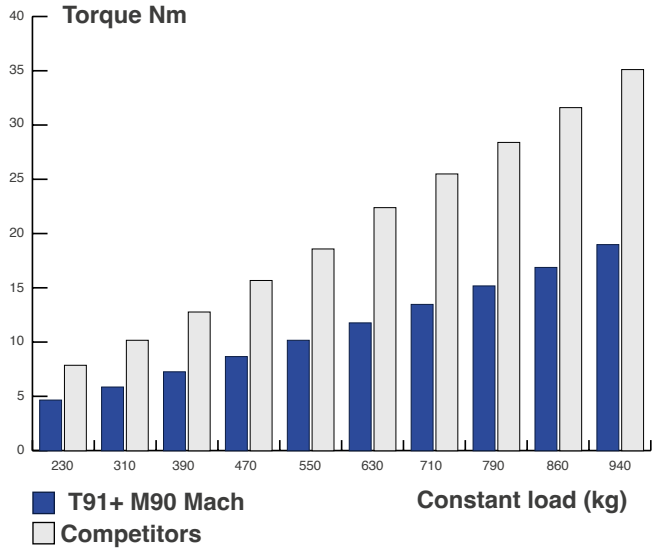

Pull load:

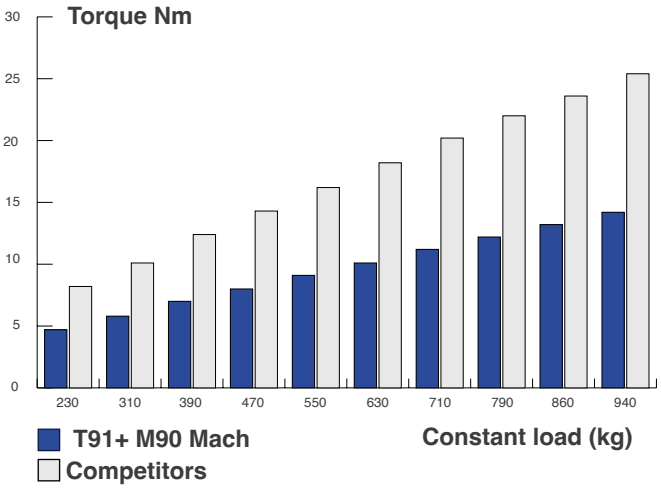

Torque comparison with Push & Pull load - radius 100m

Push load:

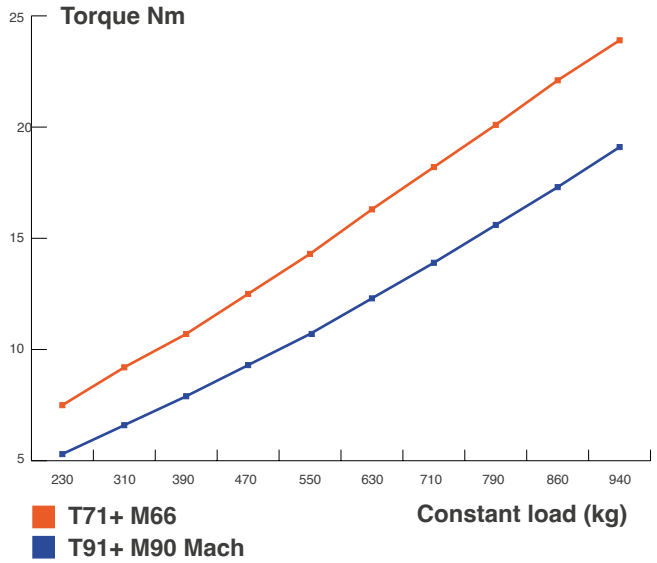

Pull load::

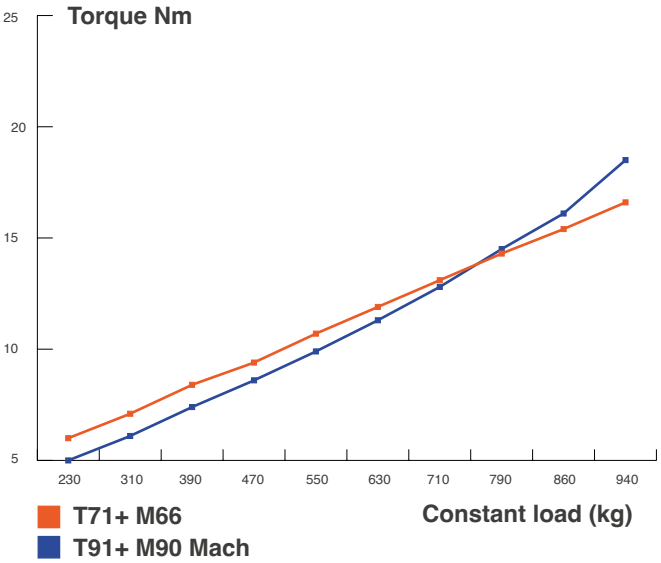

TM87O - TM87OZT (zero torque)
Rack and pinion steering systems



G87



G87ZT



- All stainless steel cable output ends
- Made of corrosion resistant materials
- Standard 3/4”tapered shaft
- The ZT version, equipped with a zero torque patented mechanism, eliminates the continuous load on the driver caused by the propeller torque
- TM87O steering systems are not to be used on boats equipped with engines that exceed the maximum horsepower rating of the boat
- Optional steering wheel
- Exceeds ISO 8848 safety standards
- Exceeds ABYC P17 safety standards

COMPONENTS - TO BE ORDERED SEPARATELY

Model	Part No.	Description
TM87O	-	Preassembled helm with steering cable
G87	1A0043838E	Standard shaft assembly
G87ZT	1A0043837C	Zero torque shaft assembly
X34	1A0036654B	Black bezel, 90° mounting
X34W	1A0040654C	White bezel, 90° mounting
X91	1A0042850N	Chrome plated bezel, 90° mounting
X90	1A0042646P	Chrome plated bezel, 90° mounting with lock device
X35	1A0036655C	Black bezel, 20° mounting
Steering wheel	-	See steering wheels section
Accessories	-	See accessories section

Installation	90° or 20°
TM87O stroke	200 mm (3.7”)
Lock-to-lock steering wheel turns	approx 3,3
Max. steering wheel diameter	420 mm (16.5”)
Min. steering cable bend radius	200 mm (7.9”)

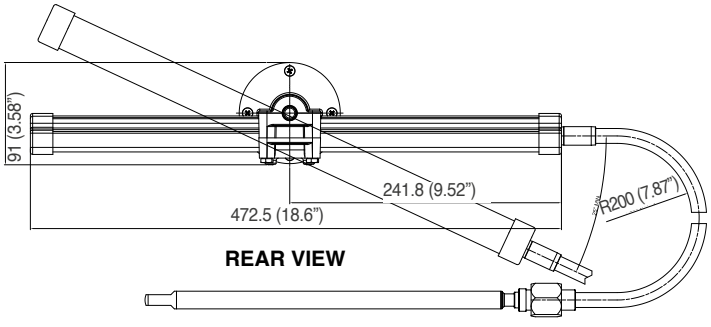

TM87O

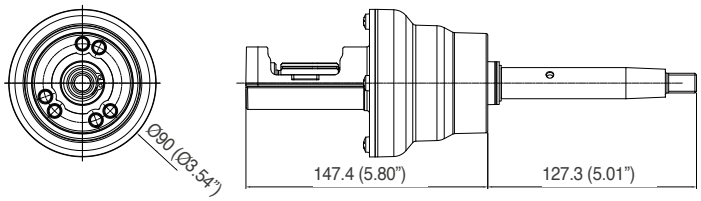

G87 and G87ZT



G89



G89ZT



G89 + X82



- All stainless steel cable output ends
- Made of corrosion resistant materials
- Standard 3/4”tapered shaft
- The ZT version, equipped with a zero torque patented mechanism, eliminates the continuous load on the driver caused by the propeller torque
- TM87O steering systems are not to be used on boats equipped with engines that exceed the maximum horsepower rating of the boat
- Optional steering wheel
- Exceeds ISO 8848 safety standards
- Exceeds ABYC P17 safety standards

COMPONENTS - TO BE ORDERED SEPARATELY

Model	Part No.	Description
TM87O	-	Preassembled helm with steering cable
G89	1A0043844Z	Standard helm suitable for X82 tilt mechanism
G89ZT	1A0043845B	Zero torque helm suitable for X82 tilt mechanism
X82	1A0043187N	Tilt mechanism
Steering wheel	-	See steering wheels section
Accessories	-	See accessories section

Installation	90° or 20°
TM87O stroke	200 mm (3.7”)
Lock-to-lock steering wheel turns	approx 3,3
Max. steering wheel diameter	420 mm (16.5”)
Min. steering cable bend radius	200 mm (7.9”)

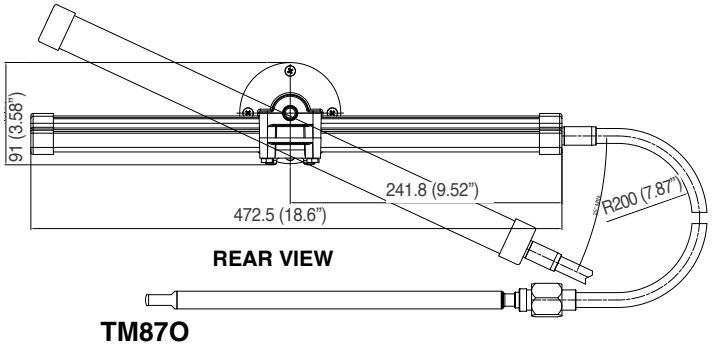

TM87O

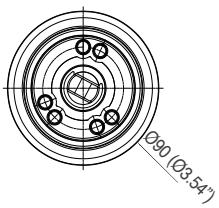

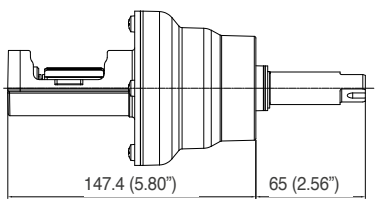

G89 and G89ZT

TM87SS - TM87SSZT (zero torque)
Rack and pinion steering systems for ski boats



G87



G87ZT



- Armoured stainless steel cable, armoured conduit
- Made of corrosion resistant materials
- Standard 3/4”tapered shaft
- The ZT version, equipped with a zero torque patented mechanism, eliminates the continuous load on the driver caused by the propeller torque
- TM87SS steering systems are not to be used on boats equipped with engines that exceed the maximum horsepower rating of the boat
- Optional steering wheel
- Exceeds ISO 8848 safety standards
- Exceeds ABYC P17 safety standards

COMPONENTS - TO BE ORDERED SEPARATELY

Model	Part No.	Description
TM87SS	-	Preassembled helm with steering cable
G87	1A0043838E	Standard helm
G87ZT	1A0043837C	Zero torque helm
X34	1A0036654B	Black bezel, 90° mounting
X34W	1A0040654C	White bezel, 90° mounting
X91	1A0042850N	Chrome plated bezel, 90° mounting
X90	1A0042646P	Chrome plated bezel, 90° mounting with lock device
X35	1A0036655C	Black bezel, 20° mounting
Steering wheel	-	See steering wheels section
Accessories	-	See accessories section

Installation	90° or 20°
TM87SS stroke	200 mm (3.7”)
Lock-to-lock steering wheel turns	approx 3,3
Max. steering wheel diameter	420 mm (16.5”)
Min. steering cable bend radius	200 mm (7.9”)

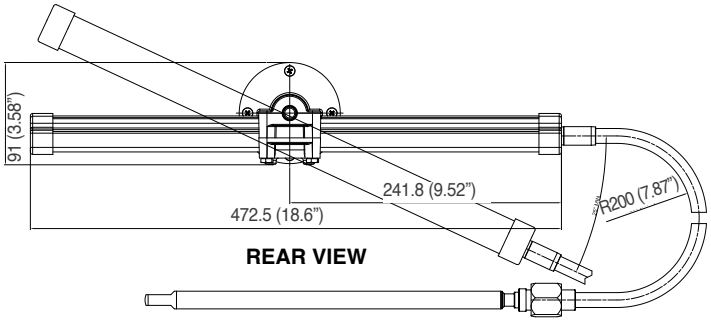

TM87SS

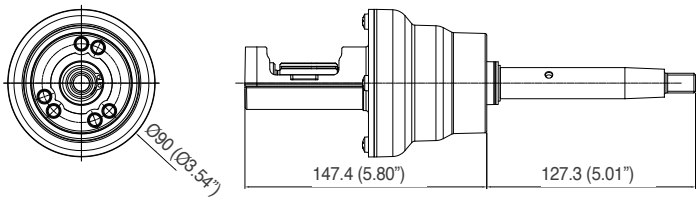

G87 and G87ZT

TM87SS - TM87SSZT (zero torque)
Rack and pinion tilt steering systems for ski boats



G89



G89 + X82



- Armoured stainless steel cable, armoured conduit
- Made of corrosion resistant materials
- Standard 3/4”tapered shaft
- The ZT version, equipped with a zero torque patented mechanism, eliminates the continuous load on the driver caused by the propeller torque
- TM87SS steering systems are not to be used on boats equipped with engines that exceed the maximum horsepower rating of the boat
- Optional steering wheel
- Exceeds ISO 8848 safety standards
- Exceeds ABYC P17 safety standards

COMPONENTS - TO BE ORDERED SEPARATELY

Model	Part No.	Description
TM87SS	-	Preassembled helm with steering cable
G89	1A0043844Z	Standard helm suitable for X82 tilt mechanism
G89ZT	1A0043845B	Zero torque helm suitable for X82 tilt mechanism
X82	1A0043187N	Tilt mechanism
Steering wheel	-	See steering wheels section
Accessories	-	See accessories section

Installation	90° or 20°
TM87SS stroke	200 mm (3.7”)
Lock-to-lock steering wheel turns	approx 3,3
Max. steering wheel diameter	420 mm (16.5”)
Min. steering cable bend radius	200 mm (7.9”)

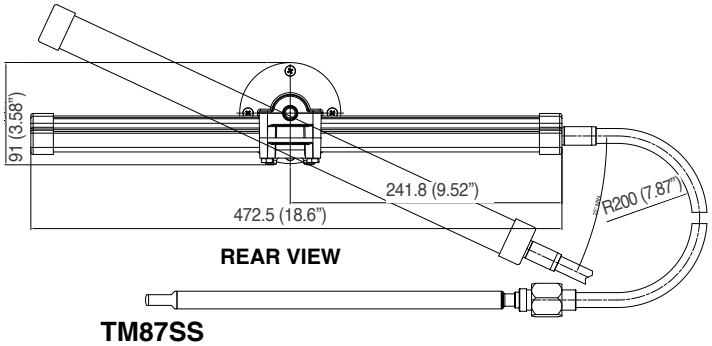

TM87SS

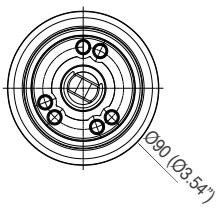

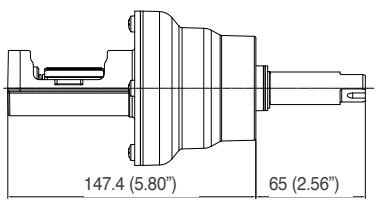

G89 and G89ZT

TM87J
Rack and pinion steering systems for jet boats



G87



- Armoured stainless steel cable
- Made of corrosion resistant materials
- Standard 3/4”tapered shaft
- TM87J steering systems are not to be used on boats equipped with engines that exceed the maximum horsepower rating of the boat
- Optional steering wheel
- Exceeds ISO 8848 safety standards
- Exceeds ABYC P17 safety standards

COMPONENTS - TO BE ORDERED SEPARATELY

Model	Part No.	Description
TM87J	-	Preassembled helm with steering cable
G87	1A0043838E	Standard shaft assembly
X34	1A0036654B	Black bezel, 90° mounting
X34W	1A0040654C	White bezel, 90° mounting
X91	1A0042850N	Chrome plated bezel, 90° mounting
X90	1A0042646P	Chrome plated bezel, 90° mounting with lock device
X35	1A0036655C	Black bezel, 20° mounting
Steering wheel	-	See steering wheels section
Accessories	-	See accessories section

Installation	90° or 20°
TM87J stroke	93 mm (3.7”)
Lock-to-lock steering wheel turns	approx 1,5
Max. steering wheel diameter	420 mm (16.5”)
Min. steering cable bend radius	200 mm (7.9”)

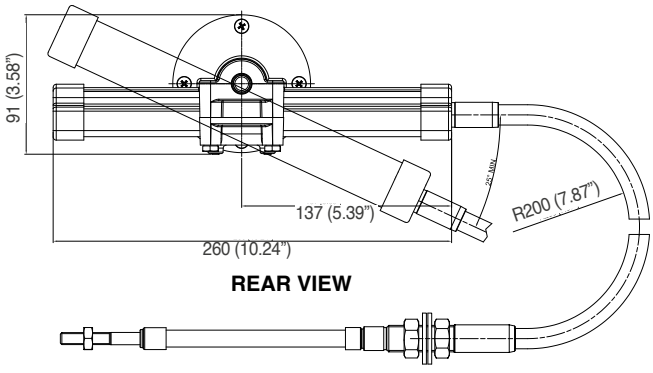

TM87J

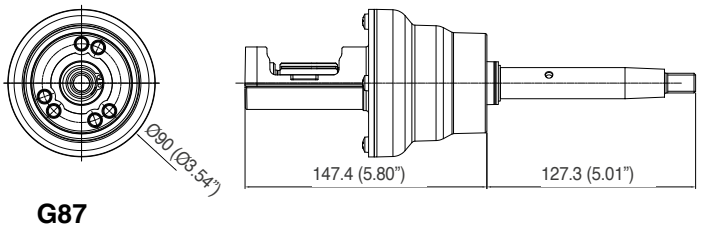

G87



G89



- Armoured stainless steel cable
- Made of corrosion resistant materials
- Standard 3/4”tapered shaft
- TM87J steering systems are not to be used on boats equipped with engines that exceed the maximum horsepower rating of the boat
- Optional steering wheel
- Exceeds ISO 8848 safety standards
- Exceeds ABYC P17 safety standards

COMPONENTS - TO BE ORDERED SEPARATELY

Model	Part No.	Description
TM87J	-	Preassembled helm with steering cable
G89	1A0043844Z	Standard shaft assembly suitable for X82 tilt mechanism
X82	1A0043187N	Tilt mechanism
Steering wheel	-	See steering wheels section
Accessories	-	See accessories section

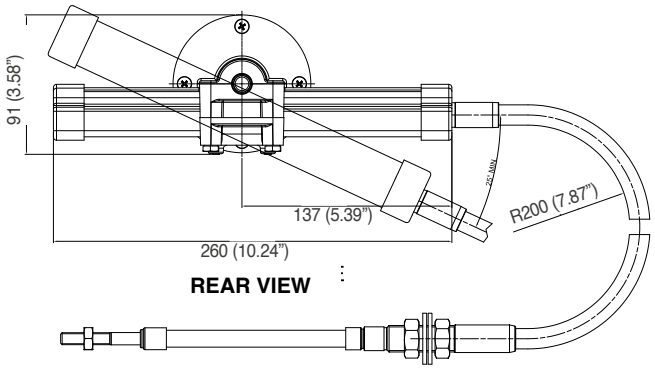

TM87J

Installation	90° or 20°
TM87J stroke	93 mm (3.7”)
Lock-to-lock steering wheel turns	approx 1,5
Max. steering wheel diameter	420 mm (16.5”)
Min. steering cable bend radius	200 mm (7.9”)

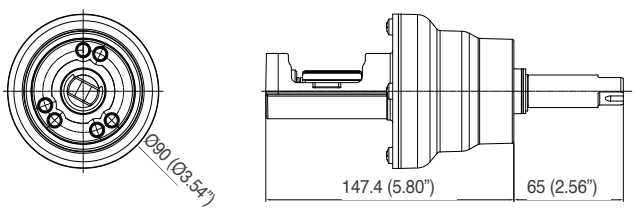

G89

MECHANICAL STEERING SYSTEM MOUNTING BEZELS



X34	1A0036654B	Black bezel, mounting 90°
X34W	1A0040654C	White bezel, mounting 90°



X35	1A0036655C	Black bezel, mounting 20°



X91	1A0042850N	Chrome plated bezel, mounting 90°



X90	1A0042646P	Chrome plated bezel with steering lock device, mounting 90°

Model	Bezel included	X34 / X34W	X35	X90	X91
T67	X	-	-	-	-
T85	X	-	-	-	-
T71FC	-	X	X	-	X
T72FC	-	X	X	-	X
T73NRFC	-	X	X	-	X
T91		X	X	X	X
T93ZT	-	X	X	X	X
TM87O	-	X	X	X	X
TM87SS	-	X	X	X	X
TM87J	-	X	X	X	X

PACKAGED MECHANICAL ROTARY STEERING SYSTEMS

ROTECH

A convenient kit form, especially suitable as replacement steering, that includes helm, bezel and cable.
The cable is available in 1-ft increments from 8 to 30 feet (specify cable length when ordering)
The wheel is not included



ROTECH - I

Helm	T71FC
Bezel	X34 - 90° bezel
Steering cable	M66



ROTECH - III

Helm	T73NRFC - zero torque helm
Bezel	X34 - 90° bezel°
Steering cable	M66



ROTECH - IV

Helm	T67
Bezel	included in the steering system
Steering cable	M58

FOURTECH

Featuring high performance helms with a Planetary Gear Design, especially suitable as replacement steering, that includes helm, bezel and cable. The cable is available in 1-ft increments from 8 to 30 feet (specify cable length when ordering)
The wheel is not included



FOURTECH - I

Helm	T91 High Performance
Bezel	X34 - 90° bezel
Steering cable	M90 Mach



FOURTECH - II

Helm	T93ZT zero torque High Performance
Bezel	X34 - 90° bezel
Steering cable	M90 Mach

ACCESSORIES FOR MECHANICAL STEERING SYSTEMS

Steering cable supports

S39



S40

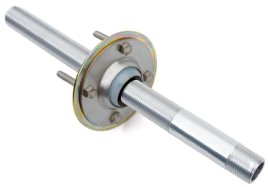

S55

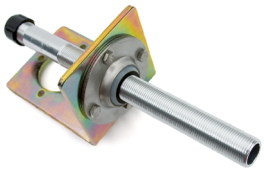



S61



S62

S39	1A0031916F	Clamp block and aluminum anodized tube
S40	1A0031917G	Splashwell mount flange, aluminum tube
S55	1A0034744A	90° rudder support, SS flange, aluminum tube
S61	1A0036191S	Clamp block, corrosion resistant painted steel
S62	1A0038830H	Same design as S61, smaller dimensions
S39T	1A0053930J	Tube only for S39
S40T	1A0053935O	Tube only for S40
S39SS	1A0041551X	Clamp block and stainless steel tube
S40SS	1A0041552Z	Splashwell mount flange, stainless steel tube
S55SS	1A0041553B	90° rudder support, SS flange, SS tube
S61SS	1A0041554D	Clamp block, corrosion resistant stainless steel
S62SS	1A0041555F	Same design as S61SS, smaller dimensions
S39TSS	1A0072971W	Stainless steel tube for S39SS
S40TSS	1A0072972Y	Stainless steel tube for S40SS

Engine connection kits



A75



A73SS/A74SS

A75	1A0034459X	Clevis
A73SS	1A0041255T	Stainless steel tiller arm for some Mercury® engines
A74SS	1A0041256V	Stainless steel tiller arm for some Johnson®, Evinrude®, BRP® engines

Warning: A73SS and A74SS tiller arms are recommended for mechanical steering systems only

Steering cables adaptors



K46

K46 1A0035679L
Adaptor to connect M47 steering cables (discontinued) to Morse® D290 and Ultraflex® FC type steering helms



K66

K66 1A0038432Q
Adaptor to connect M66 steering cables to Ultraflex® threaded steering helms (discontinued)

ACCESSORIES FOR MECHANICAL STEERING SYSTEMS

Accessories Selection Guide

INSTALLATION	CABLE SUPPORT+ ENGINE CONNECTION KIT	INSTALLATION	CABLE SUPPORT+ ENGINE CONNECTION KIT
A	S39 o S61 o S62 + A75	C	A73SS o A74SS
B	S40 + A75	D	S55 + A75

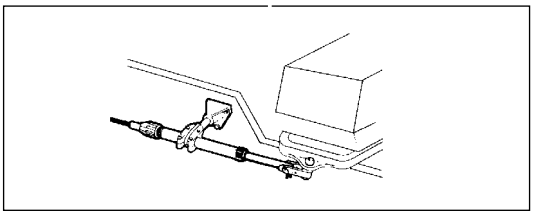

A = With clamp block

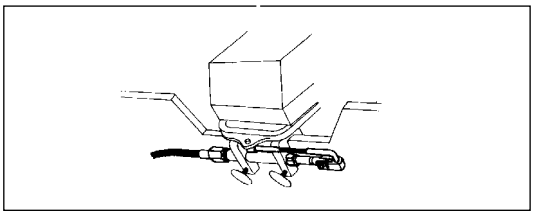

C = With tiller arm

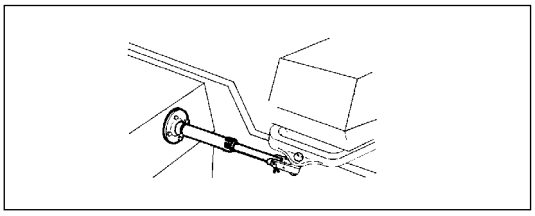

B = With splashwell

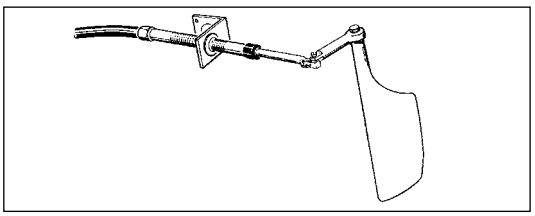

D = With 90°rudder support

A88 - A92 Tie bars for Twin outboard engines

Universal tie bars applicable to twin outboard engines using mechanical steering **up to 300 hp of maximum power.**
For applications with hydraulic steering systems please refer to the hydraulic steering system section.

A88

Universal tie bar applicable to twin outboard engines using mechanical or hydraulic steering up to 300 hp maximum total power.
• All stainless steel components
• Kit Includes all mounting hardware

Interasse motore Adjustable from 650 mm (25.6”) to 950 mm (37.4”)

A88	1A0040128E	Tie bar

ATTENTION: on those applications where the clearance between engine tiller arm and cowling is not sufficient for the use of the **A88,** the **A92** tie bar is recommended.



A 88

A92

Universal tie bar applicable to twin outboard engines using mechanical or hydraulic steering up to 300 hp maximum total power.
• Easily adjustable before or after installation
• All stainless steel components

A92/700 Eng center Adjustable from 550 mm (21.6”) to 700 mm (27.5”)
A92/950 Eng center Adjustable from 700 mm (27.5”) to 950 mm (37.4”)

A92/700	1A0040892V	Tie bar
A92/950	1A0040893X	Tie bar



A 92

ACCESSORIES FOR MECHANICAL STEERING SYSTEMS

Wire type Steering grommets and rings

Black	Part No.	Description
R1 B	3A0038060I	Ø 152 mm (6”) - h.110 mm (4.3”)
R2 B	3A0038061J	Ø 105 mm (4.1”); h 65 mm (2.5”)
R3 B	3A0038062K	2 holes - Ø 105 mm(4.1”); h 52 mm (2.05”)
R4 B	3A0038827V	Adjustable Ø 105 mm(4.1”); h 68 mm (2.68”)



R1 B R2 B R3 B R4 B

White	Part No.	Description
R1 W	3A0038953A	Ø 152 mm (6”) - h.110 mm (4.3”)
R2 W	3A0038954C	Ø 105 mm (4.1”); h 65 mm (2.5”)
R3 W	3A0038955E	2 holes - Ø 105 mm(4.1”); h 52 mm (2.05”)
R4 W	3A0038956G	Adjustable Ø 105 mm(4.1”); h 68 mm (2.68”)



R1 W R2 W R3 W R4 W

Grey	Part No.	Description
R1 G	3A0039279V	Ø 152 mm (6”) - h.110 mm (4.3”)
R2 G	3A0039280D	Ø 105 mm (4.1”); h 65 mm (2.5”)
R3 G	3A0039281F	2 holes - Ø 105 mm(4.1”); h 52 mm (2.05”)



R1 G R2 G R3 G

Profilamentpolyester braided sleevings for cables

- Temperature class: F
- Continuous working temperature rating: from -50°C to +155°C. with peaks at + 180°C
- Halogen Free
- Flammability: self extinguishing
- Good mechanical resistance
- Excellent abrasion resistance
- Good resistance to solvents
- Not watertight
- Very flexible
- Expansion ratio 1:2
- Use: hot cutting to avoid fraying
- Colour: black

Application:





STANDARDS:

- Compliant with RoHS 2002/95/CE specifications
- NF EN 60684-1 (10-2003)
- NF EN 60684-2 (01-1998) modified by NF EN 60684-2/A1 (12/2003), NF EN 60684-2/A2 (05/2006)
- NF EN 60684-3 sheets 340 to 342 (4-2003)

Available in UFLEX

NOMINAL INTERNAL DIAMETER	PART NO. L: 1 m	PART NO. L: 10 m	PART NO. L: 20 m	ROLL PART NO. L: 100 m	ROLL WEIGHT Kg
10 mm (0.39”)	1C0023622S	1C0024853T	1C0024858D	1C0068180N	8,0
15 mm (0.59”)	1C0023623U	1C0024854V	1C0024859F	1C0020540Y	12,16
20 mm (0.78”)	1C0023624W	1C0024855X	1C0024863W	1C0020542C	17,8
25 mm (0.98”)	1C0023625Y	1C0024856Z	1C0024861S	1C0020543E	20,2
30 mm (1.18”)	1C0023626A	1C0024857B	1C0024862U	1C0020544G	27,0



OUTBOARD AND STERNDRIVE HYDRAULIC STEERING SYSTEMS

Packaged hydraulic steering systems

MAX HORSEPOWER	KIT	HELM	CYLINDER (1)	FLEXIBLE HOSES (2)	OIL litres	WHEEL TURNS	OPTIONAL
115 hp	GOTECH-OBF	UP18	UC81-OBF	KIT OB-GT/M-60	2	4,5	Steering wheel Thru hull R5; R5SS
	GOTECH-OBS	UP18	UC68-OBS	KIT OB-GT/M-60	2	3,7 / 5,5	
	GOTECH-I	UP18	UC69-I	KIT OB-GT/M-60	2	3,8	
150 hp	HYCO-OBS	UP20F	UC68-OBS	KIT OB	2	3,4 / 5,0	Steering wheel Flange X74 Thru hull R5; R5SS; R8; R9
	HYCO-I	UP20F	UC69-I	KIT OB	2	3,5	
	HYCO-OBS/M	UP20F	UC68-OBS	KIT OB/M-60 (90)	2	3,4 / 5,0	
	HYCO-I/M	UP20F	UC69-I	KIT OB/M-60 (90)	2	3,5	
175 hp	HYTECH-OBF	UP20F	UC95-OBF	KIT OB	2	4,7	Steering wheel Flange X74 Thru hull R5; R5SS; R8; R9
	HYTECH-OBF/M	UP20F	UC95-OBF	KIT OB/M-60 (90)	2	4,7	
200 hp	NAUTECH-1-M-60 NO CYLINDER*	UP28F		KIT OB/M-60 (90,150)	2	5	
	NAUTECH-3-M-60 NO CYLINDER*	UP25F		KIT OB/M-60 (90,150)	2	5,6	
300 hp	NAUTECH-1	UP28F	UC128-OBF	KIT OB	2	4,3	Steering wheel Flange X64; X57 Thru hull R5; R5SS; R8; R9
	NAUTECH-3	UP25F	UC128-OBF	KIT OB	2	4,8	
	NAUTECH-1/M	UP28F	UC128-OBF	KIT OB/M-60 (90, 150)	2	4,3	
	NAUTECH-3/M	UP25F	UC128-OBF	KIT OB/M-60 (90, 150)	2	4,8	
>300 hp	SilverSteer™ and MasterDrive™ steering systems are recommended						

NOTA:
1) Please refer to cylinder application chart.
2) See available lengths on hydraulic hose section

*For Yamaha engines with integrated cylinder.
150hp (F150LC, F150XC, LF150XC, F150XCB); 175hp (F175LB, F175XB, F175XB); 200hp (F200LC, F200XC, LF200XC, F200XCB)

GOTECH



GOTECH-OBF



GOTECH-OBS



GOTECH-I

HYCO



HYCO-OBS



HYCO-I



HYCO-OBS/M



HYCO-I/M

HYTECH



HYTECH-OBF



HYTECH-OBF/M

NAUTECH



NAUTECH-1
NAUTECH-3



NAUTECH-1/M
NAUTECH-3/M



NAUTECH-1/M/NO CYLINDER
NAUTECH-3/M/NO CYLINDER

NOTE:
GOTECH, HYCO, HYTECH and NAUTECH kits are also available without hydraulic hoses

Packaged hydraulic steering systems

SILVERSTEER

HORSEPOWER	KIT	HELM	CYLINDER (1)	FLEX HOSES (2)	OIL litres	WHEEL TURNS	OPTIONAL
> 300 hp (please refer to max power applicable)	SVS-28	UP28F-SVS	UC130-SVS or UC128-SVS	KIT OB-SVS	2	4,6	Steering wheel
	SVS-33	UP33F-SVS	UC130-SVS or UC128-SVS	KIT OB-SVS	2	3,9	Thru hull R8; R9

MASTERDRIVE

HORSEPOWER	KIT	HELM	POWER UNIT/ USER INTERFACE	OIL litres	WHEEL TURNS	ORDERED SEPARATELY
> 300 hp (please refer to max power applicable)	MD32-F	UH32-F	UPMD/UCMD	4	4,1	- Outboard cylinder UC128-SVS UC130-SVS (1) - Inboard cylinder (1) - X88 tilt mechanism - Flex hoses: KIT OB-SVS (2)
	MD32-T	UH32-T	UPMD/UCMD	4	4,1	
	MD40-F	UH40-F	UPMD/UCMD	4	6,5	
	MD40-T	UH40-T	UPMD/UCMD	4	6,5	

NOTE:
1) Please refer to cylinder application chart
2) KIT OB-SVS: see available lengths on appropriate section



SILVERSTEER™



MASTERDRIVE™

How to choose an outboard hydraulic steering system - Cross reference

All the components of Ultraflex hydraulic steering systems are made specifically for the marine environment, using materials and working process which offer long life and safety for the most extreme conditions.

How the system works

A hydraulic steering system consists of a steering pump, a cylinder tied to the rudder or to the outboard or sterndrive engine and the connecting nylon or copper tubing.
Under normal operating conditions, a turn of the steering wheel will send the oil from the helm unit into one of the two connecting hydraulic lines.
The oil will be pumped into one of the chambers of the cylinder and either extend or retract the cylinder rod, depending on the steering wheel rotation. The fluid going out from the other chamber of the cylinder is returned to the helm via the other hydraulic line.
There are two basic components in all the hydraulic steering systems: the helm unit and the cylinder, connected by nylon or copper tubing.The helm unit consists of both a hydraulic pump and a valve assembly.
The valve assembly prevents outgoing fluid from returning along the same line, isolates each steering station, locks the rudder and eliminates rudder “feedback” to the helm. The cylinders are double acting and may be balanced or unbalanced (in which case the rod extends through only one end of the cylinder).

Suggestions and warnings when selecting an hydraulic steering system

The strength required to drive a boat equipped with a hydraulic steering system is inversely proportional to the number of turns of the wheel lock-to-lock. The wheel turns are determinated by the ratio between the cylinder volume, pump displacement.
With the same type of cylinder installed on the engine, the less are the turns, the faster is the response but higher is the effort; more wheel turns, slower is the response and lower is the effort.

Other factors that can influence steering effort are:
- Vessel speed
- Rudder dimension, or engine power
- Propeller selection
- Hull type (displacement, planing, etc.)
- Sea conditions
- Oil viscosity

Cross reference

The above Cross Reference chart has been drawn to facilitate a functional comparison among brands and should be used as general reference only.

For any further information please contact our Technical Service

HELM PUMPS	
ULTRAFLEX®	**SEASTAR®**
UP18	BayStar™ HH4311
UP20 F	BayStar™ HH4314
UP20 T	BayStar™ HH4315
UP25 F	Seastar™ 1.4 HH5269
UP25NV F	-
UP25 T	Seastar™ 1.4 HH6544
UP28 F	Seastar™ 1.7 HH5271
UP28 T	Seastar™ 1.7 HH6541
UP 28 R	Seastar™ 1.7 HH5261
UP33 F	Seastar™ 2.0 HH5273
UP33NV F	Seastar™ 2.0 HH5760
UP33 T	Seastar™ 2.0 HH6543
UP33 R	-
UP39 F	Seastar™ 2.4 HH5272
UP39 T	Seastar™ 2.4 HH6542
UP39 R	Seastar™ 2.4 HH5262
UP45 F	Seastar™ 3.0 HH5283
UP45 T	-
UP45 R	Seastar™ 3.0 HH5265
UP28 F-SVS	Seastar™ PRO - HH5779
UP28 T-SVS	Seastar™ PRO – HH6573
UP33 F-SVS	Seastar™ PRO - HH5770
UP33 T-SVS	Seastar™ PRO – HH6574
UP39 F-SVS	Seastar™ PRO - HH5772
UP39 T-SVS	Seastar™ PRO - HH6188

CYLINDERS	
ULTRAFLEX®	**SEASTAR®**
UC81-OBF	-
UC95-OBF	Baystar™ HC4645
UC128-OBF	Seastar™ HC5345
UC130-SVS	Seastar™ HC6345
UC68-OBS	-
UC132-OBS	Seastar™ HC5370/5328
UC69-I	Baystar™ HC4461-3
UC116-1	Seastar™ HC5312
UC168-I	Seastar™ HC5314
UC215-I	Seastar™ HC5319
UC293-I	-
UC378-I	-

How to select an outboard hydraulic steering system
Suggestions and warnings

OUTBOARD CYLINDERS Maximum power rating applicable					
Cylinder model	Single engine single cylinder	Double engine single cylinder		Double engine double cylinder	
		NON counter rotating propellers	Counter rotating propellers	NON counter rotating propellers	Counter rotating propellers
	Max hp power	Max hp power	Max hp power	Max hp power	Max hp power
UC81-OBF	115	not applicable	not applicable	not applicable	not applicable
UC95-OBF	175	175	175	not applicable	not applicable
UC68-OBS	150	not applicable	not applicable	not applicable	not applicable
UC128-OBF	300	300	500	500	600
	350	350	600	600	700
UC130-SVS	350	350	600	600	700
UC132-OBS	250	250	300	300	300

WARNING: These recommendations should be used as a general reference only. Final selection should be made with the assistance of a qualified installation technician. For any further information please contact our Technical Service

STEERING WHEEL TURNS single cylinder										
Cylinder model	UP18 18cc	UP20 20cc	UP25 25cc	UP28 28cc	UP33 33cc	UP 39 39cc	UP45 45 cc	UP28-SVS 28cc	UP33-SVS 33cc	UP39-SVS 39cc
UC81-OBF	4,5	-	-	-	-	-	-	-	-	-
UC95-OBF	-	4,7	-	-	-	-	-	-	-	-
UC128-OBF	-	-	5,1	4,3	3,6	3,1	-	-	-	-
UC128-SVS	-	-	-	-	-	-	-	4,6	3,9	3,3
UC130-SVS	-	-	-	-	-	-	-	4,6	3,9	3,3
UC68-OBS	-	3,4/5,0	-	-	-	-	-	-	-	-
UC132-OBS	-	-	5,6/6,9	4,7/5,8	4,0/4,9	3,4/4,2	2,9/3,6	-	-	-
UC133-IOB	-	-	5,6	4,7	4,0	3,4	2,9	-	-	-

Recommended

STEERING WHEEL TURNS double cylinder						
Cylinder model	UP28 28cc	UP33 33cc	UP39 39cc	UP45 45cc	UP33-SVS 33cc	UP39-SVS 39cc
UC128-OBF	-	7,3	6,2	5,3	-	-
UC128 -SVS	-	-	-	-	7,3	6,2
UC130 -SVS	-	-	-	-	7,9	6,7
UC132-OBS	-	8,0/9,8	6,8/8,4	5,8/7,2	-	-
UC133-IOB	-	8,0	6,8	5,8	-	-

Recommended

SINGLE STATION / SINGLE ENGINE:

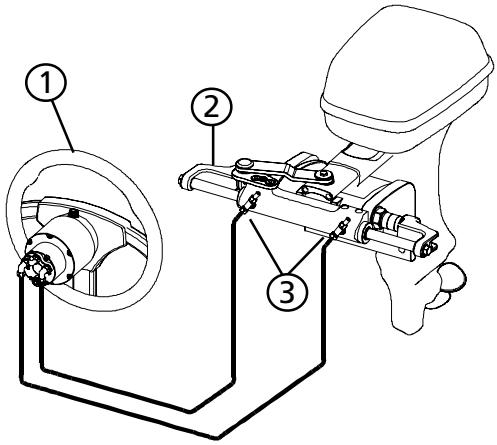

1. helm
2. starboard cylinder
3. bleed valves

SINGLE STATION / DUAL ENGINE:

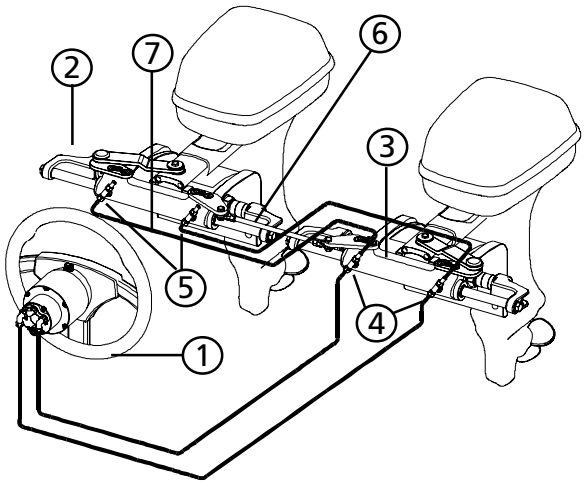

1. helm
2. starboard cylinder
3. port cylinder
4. “T” fittings
5. bleed valves
6. tie bar
7. kit OB-2C (Kit OB-2C130-SVS for SilverSteer™)

DUAL STATION / SINGLE ENGINE

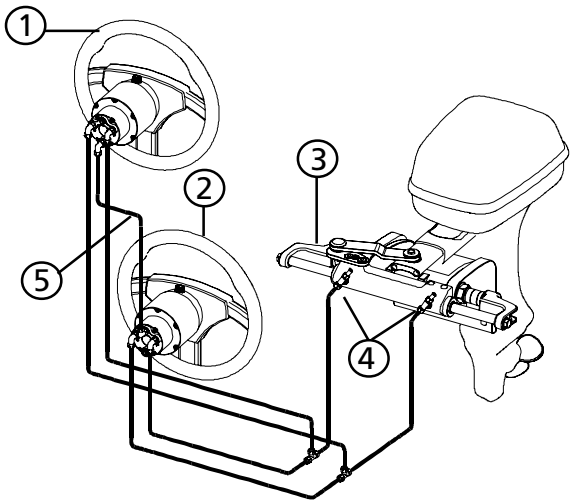

1. upper station helm
2. lower station helm
3. starboard cylinder
4. bleed valves
5. kit OB-2S

DUAL STATION / DUAL ENGINE

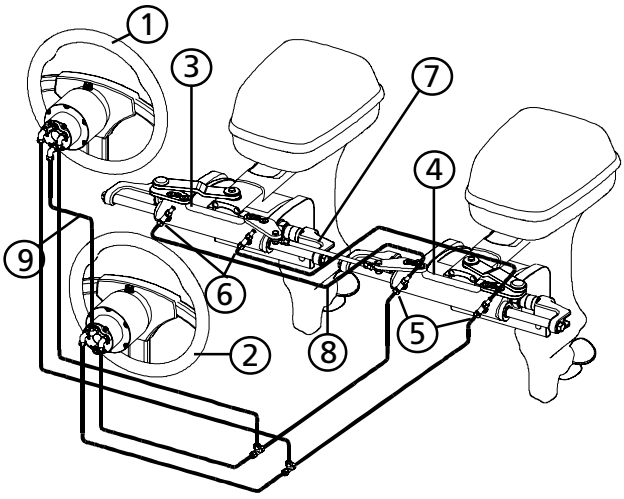

1. upper station helm
2. lower station helm
3. starboard cylinder
4. port cylinder
5. “T” fittings
6. bleed valves
7. tie bar
8. kit OB-2C (Kit OB-2C130-SVS for SilverSteer™)
9. kit OB-2S

SINGLE STATION / THREE ENGINES

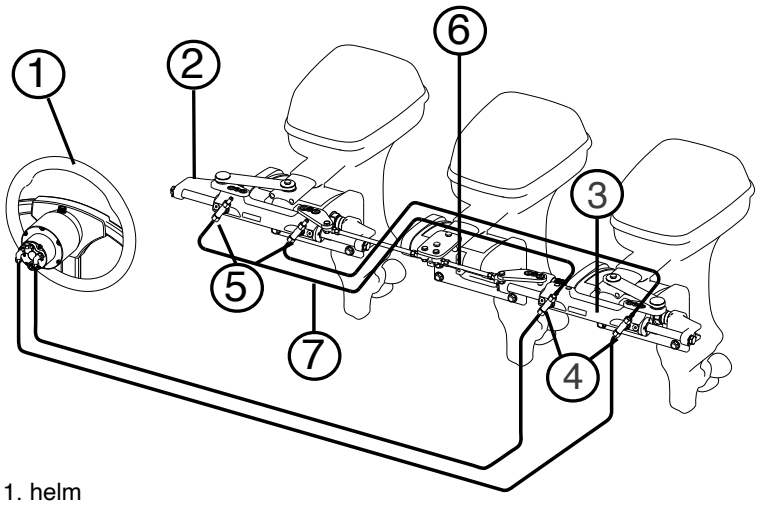

1. helm
2. starboard cylinder
3. port cylinder
4. “T” fittings
5. bleed valves
6. tie bar
7. kit OB-2C (Kit OB-2C130-SVS for SilverSteer™)

SINGLE STATION / FOUR ENGINES

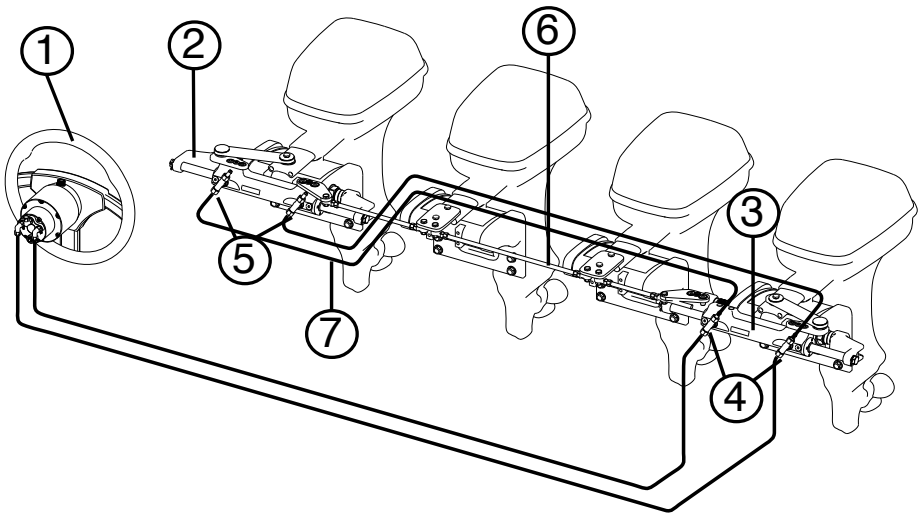

1. helm
2. starboard cylinder
3. port cylinder
4. “T” fittings
5. bleed valves
6. tie bar
7. kit OB-2C (Kit OB-2C130-SVS for SilverSteer™)

DUAL STATION / THREE ENGINES

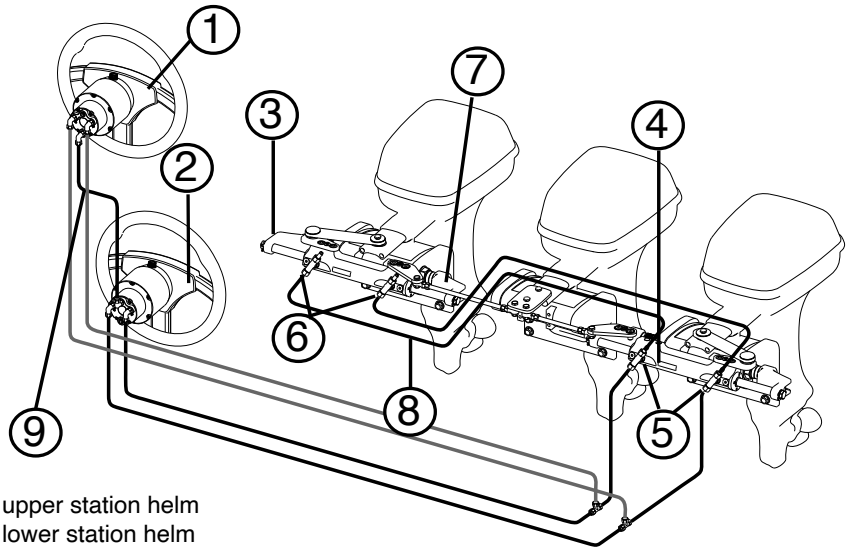

1. upper station helm
2. lower station helm
3. starboard cylinder
4. port cylinder
5. “T” fittings
6. bleed valves
7. tie bar
8. kit OB-2C (Kit OB-2C130-SVS for SilverSteer™)
9. kit OB-2S

DUAL STATION / FOUR ENGINES

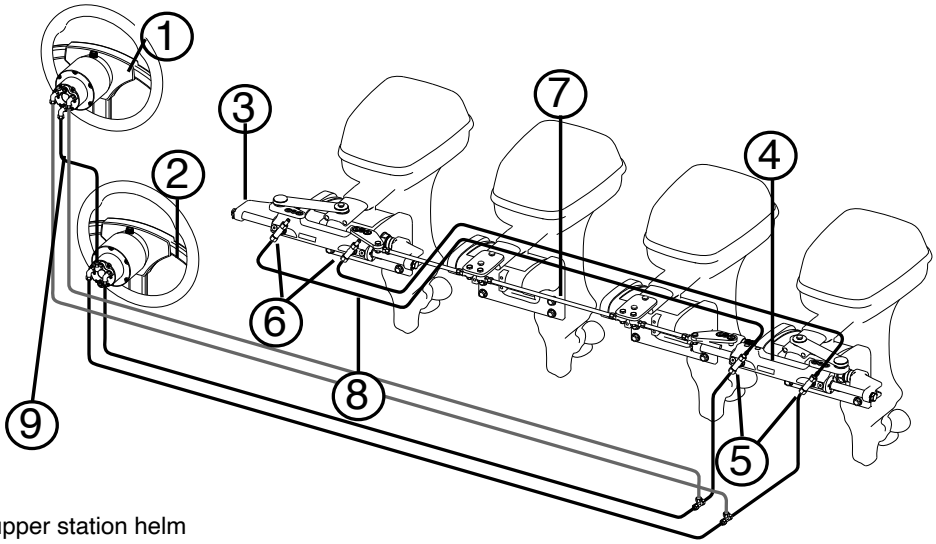

1. upper station helm
2. lower station helm
3. starboard cylinder
4. port cylinder
5. “T” fittings
6. bleed valves
7. tie bar
8. kit OB-2C (Kit OB-2C130-SVS for SilverSteer™)
9. kit OB-2S

Adjustable steering wheel position mechanisms
Tilt mechanisms

Tilt mechanisms suitable for tilt mount helms

Tilt range of 48° and five locking positions



X82



X88



X83-SVS

Model	Part No.	Description
X82	1A0043187N	Tilt mechanism for mechanical hydraulic and electronic steering systems
X88	1A0044006L	Tilt mechanism for Masterdrive™ steering systems
X83-SVS	1A0044005J	Tilt mechanism for Silversteer™ steering systems

X82	Compatible with all pumps suitable with discontinued tilt mechanism X52 (1A0039250U)
X88	Compatible with all pumps suitable with discontinued tilt mechanism X66 (1A0040613M)
X83-SVS	Compatible with all pumps suitable with discontinued tilt mechanism X70-SVS (1A0041880T)

The new pumps fit discontinued tilt mechanism X52, X66 and X70-SVS using the new K84 bracket - 1A0044024N

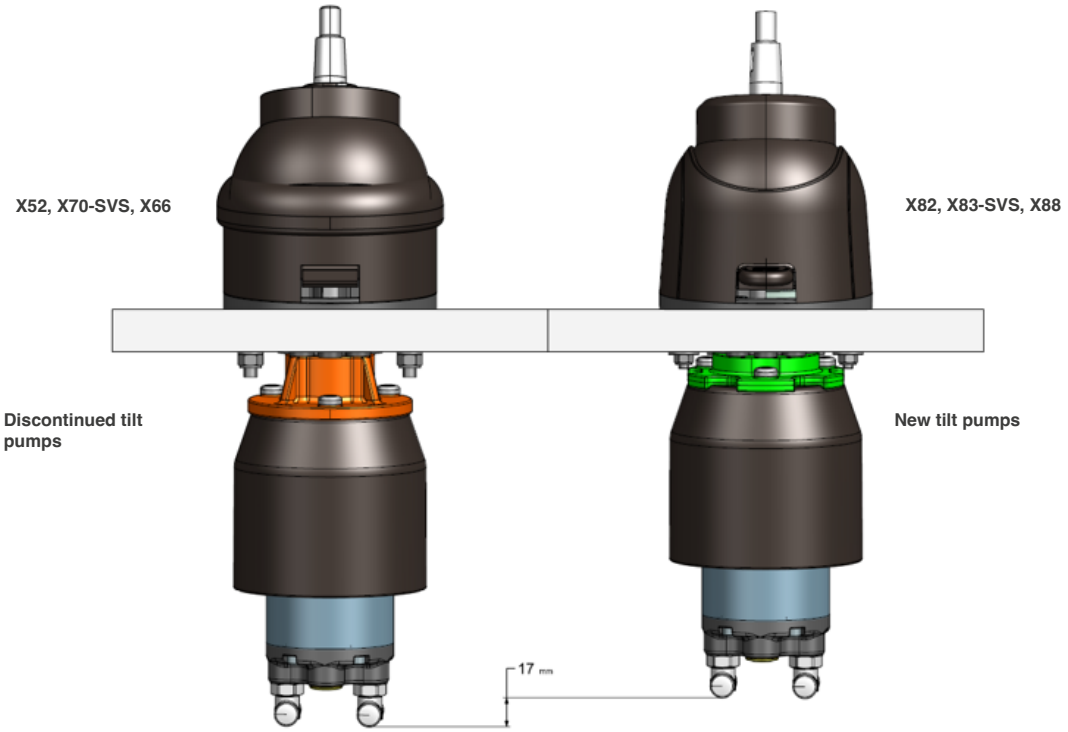

Tilt mechanism suitable for front mount helms

The only available tilt in the market which can upgrade your standard front mount helm.
Minimum space required under the dashboard.
Tilt range of 60° and five locking positions.
Not applicable to UP18 or UP20 helms

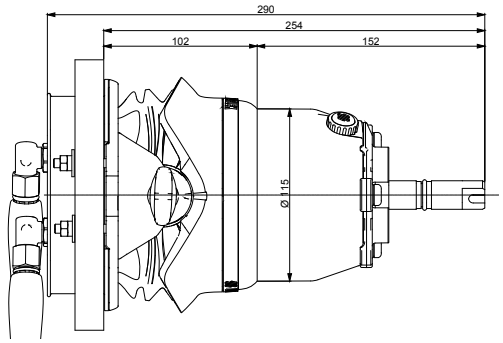



X72

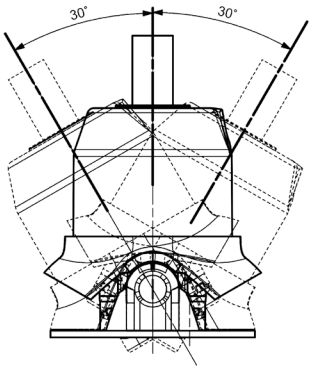

X72	1A0043140K	Tilt mechanism for hydraulic front mount steering systems

Tilt mechanism application for mechanical steering systems

TILT MECHANISM	Part No.	T81, T83NRFC	T101, T103ZT	TM870, TM870ZT, TM87SS TM87SSZT, TM87J
X82	1A0043187N	X	X	X

Tilt mechanism application for hydraulic and electronic steering systems

TILT MECHANISM (DISCONTINUED)	Part No.	UP18 UP20F	FRONT MOUNT HELMS		TILT MOUNT HELMS [1]			
			STANDARD UP25F, UP28F, UP33F, UP39F, UP45F	SILVERSTEER UP28F-SVS, UP33F-SVS, UP39F-SVS	STANDARD UP20T,UP25T, UP28T, UP33T, UP39T, UP45T	SILVERSTEER UP28T-SVS, UP33T-SVS, UP39T-SVS	MASTERDRIVE	INTEGRA
X52	1A0039250U	-	-	-	X	-	-	X
X70-SVS	1A0041880T	-	-	-	-	X	-	-
X66	1A0040613M	-	-	-	-	-	X	-

1- Discontinued tilt mechanisms fit the new helms (see new part numbers) using the K84 - 1A0044024N adapter bracket .

TILT MECHANISM	PART No.	UP18 UP20F	FRONT MOUNT HELMS		TILT MOUNT HELMS [2]			
			STANDARD UP25F, UP28F, UP33F, UP39F, UP45F	SILVERSTEER UP28F-SVS, UP33F-SVS, UP39F-SVS	STANDARD UP20T, UP25T, UP28T, UP33T, UP39T, UP45T	SILVERSTEER UP28T-SVS, UP33T-SVS, UP39T-SVS	MASTERDRIVE	INTEGRA
X82	1A0043187N	-	-	-	X	-	-	X
X83-SVS	1A0044005J	-	-	-	-	X	-	-
X88	1A0044006L	-	-	-	-	-	X	-
X72	1A0043140K	-	X	X	-	-	-	-

2- The new tilt mechanisms can be used with both new pumps and discontinued models, without an adapter bracket.

UP18
Intermediate mount position helm


UP18

- Built-in lock valve for positive rudder lock
- Integrated relief valve for over-pressure protection
- 3/4” tapered stainless steel shaft
- Includes 2x 1/4” NPT fittings
- Corrosion proof composite housing
- Easy accessible lock valve and shaft seal for replacement
- For use with UC81-OBF, UC68-OBS and UC69-I cylinders only
- Intermediate mount position helm
- Sold together with the cylinder in the GoTech kits

Model	Part No.	Description
UP18	1A0043182C	Intermediate mount position helm

Mounting	intermediate
Displacement / revolution	18 cc- 1.1 cu.in
No. of pistons	5
Relief valve setting	55 Bar - 800 PSI
Max. wheel diameter	508 mm (20”)
Weight	3,6 kg (8 lbs”)

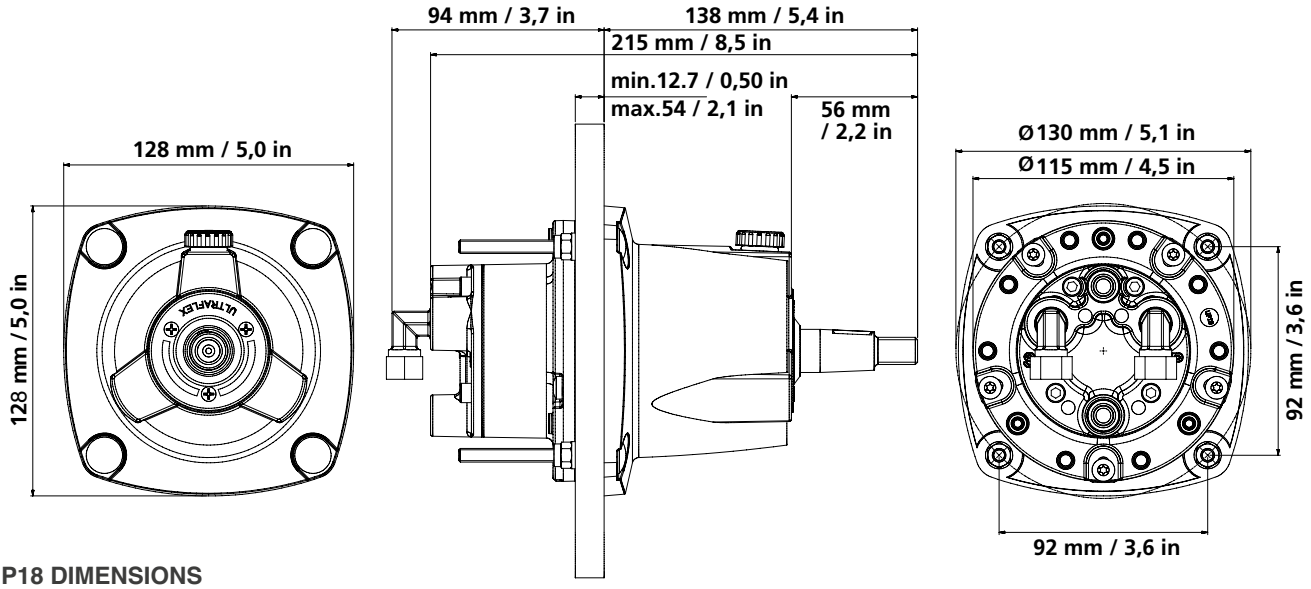

UP18 DIMENSIONS



UP20T + X82



UP20F



UP20F + X74

- Built-in lock valve for positive rudder lock
- Integrated relief valve for over-pressure protection
- 3/4" tapered stainless steel shaft
- Corrosion proof composite housing
- Easy accessible lock valve and shaft seal for replacement
- Includes 90° adjustable fittings for 3/8" hose
- **KIT F** - 1A0039664Y (optional): Remote fill adapter
- For use with UC95-OBF, UC68-OBS and UC69-I cylinders only
- UP20F sold together also with cylinder in the HYCO or HYTECH kits

For UP20F pump
- **X74** - 1A0043048Y square flange permits to install the UP20F pump in an intermediate dashboard position

For UP20T pump
- Tilt mechanism: **X82** - 1A0043178N tilt range of 48° and five locking positions

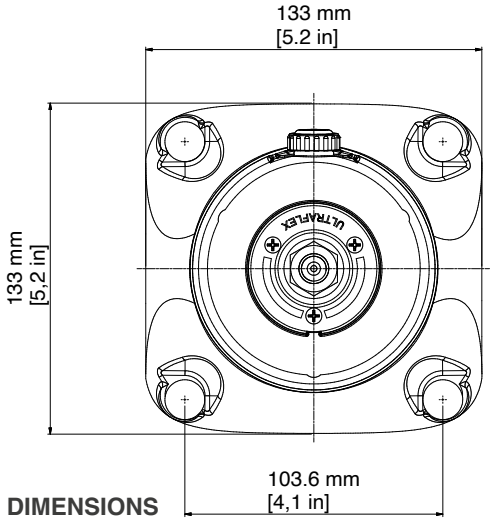

X74 DIMENSIONS

MODEL	P. No.	MOUNTING	DISPLACEMENT/ REVOLUTION	No. OF PISTONS	RELIEF VALVE SETTING	MAXIMUM WHEEL DIA.	WEIGHT
UP20F	1A0043180Y	Front mount	20 cc - 1.2 cu. in	5	70 Bar - 1000 PSI	508 mm - 20"	3.6 kg - 8 lbs
UP20T-X82	1A0044033P + 1A0043187N	With X82 tilt included	20 cc - 1.2 cu. in	5	70 Bar - 1000 PSI	406 mm - 16"	3.9 kg - 8.5 lbs

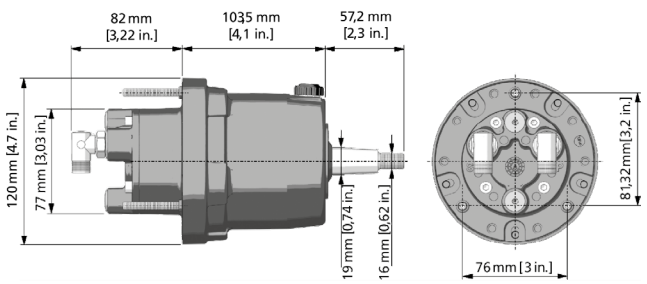

UP20F DIMENSIONS

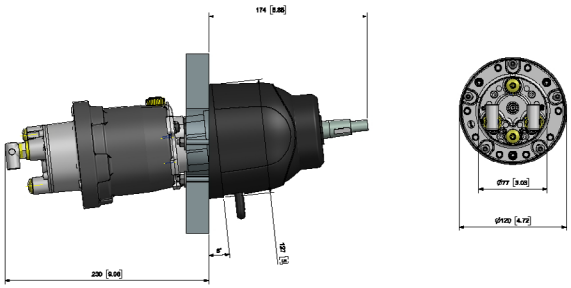

UP20T DIMENSIONS

UP25F - UP28F - UP33F - UP39F - UP45F
Front mount helms

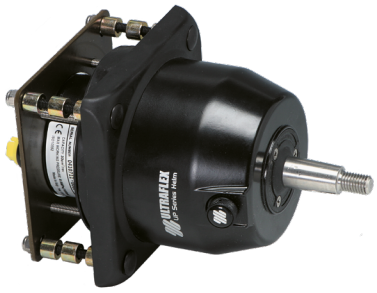

Front mount helm with X64





Front mount helm with X57

- Available in five different displacement sizes
- Built-in lock valve for positive rudder lock
- Integrated relief valve for over-pressure protection
- 3/4″ tapered stainless steel shaft
- Easy accessible lock valve and shaft seal for replacement
- Cast iron rotor for greater durability and longer life
- Includes 90° **adjustable** fittings for 3/8” hose
- Ball bearing piston race
- **X64** - 1A0040198C square flange or **X57** - 1A0039464P round flange to install the helms in a intermediate dashboard position.
- Tilt mechanism: **X72 -** 1A0043140K tilt range of 60° and five locking positions
- UP25F and UP28F are also sold together with the cylinder in the NAUTECH kits

MODEL	P. No.	MOUNTING	DISPLACEMENT/ REVOLUTION	No. OF PISTONS	RELIEF VALVE SETTING	MAXIMUM WHEEL DIA.	WEIGHT
UP25F	1A0042462D	Front mount	25 cc - 1.5 cu.in	5	70 Bar - 1000 PSI	710 mm - 28”	5 kg - 11 lbs
UP28F	1A0042459R	Front mount	28 cc - 1.7 cu.in	5	70 Bar - 1000 PSI	710 mm - 28”	5 kg - 11 lbs
UP33F	1A0042456J	Front mount	33 cc - 2.0 cu.in	7	70 Bar - 1000 PSI	710 mm - 28”	5 kg - 11 lbs
UP39F	1A0042453C	Front mount	39 cc - 2.4 cu.in	7	70 Bar - 1000 PSI	710 mm - 28”	5 kg - 11 lbs
UP45F	1A0042465K	Front mount	45 cc - 2.7 cu.in	7	70 Bar - 1000 PSI	710 mm - 28”	5 kg - 11 lbs

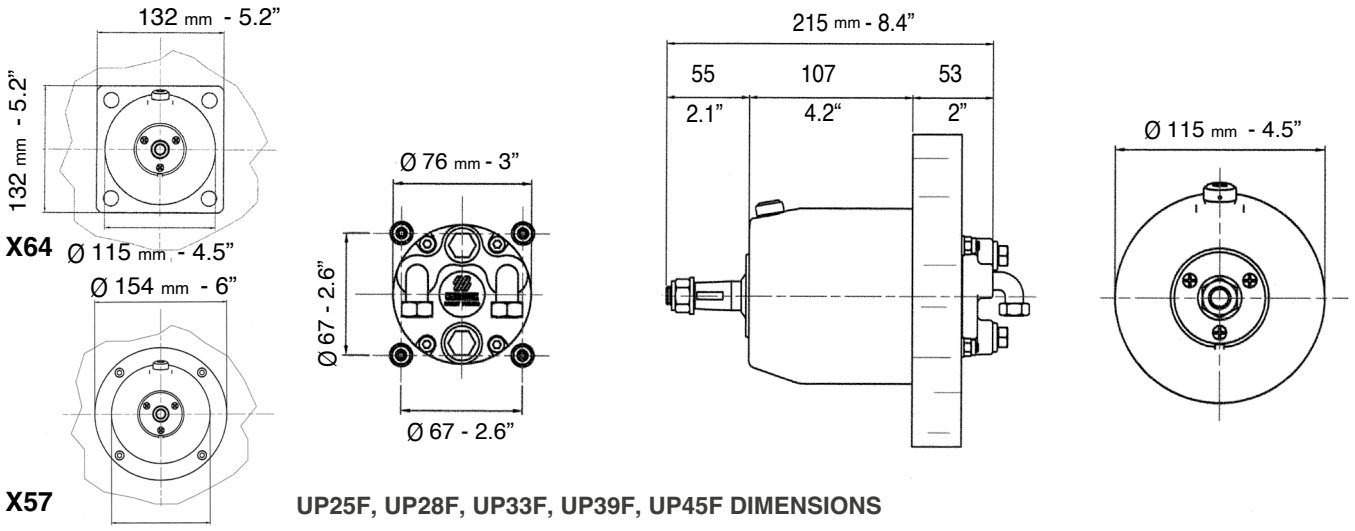

UP25F, UP28F, UP33F, UP39F, UP45F DIMENSIONS







X82

- Available in five dfferent displacement sizes
- Ball bearing piston race
- Built-in lock valve for positive rudder lock
- Integrated relief valve for over-pressure protection
- Stainless steel shaft
- Easy accessible lock valve and shaft seal for replacement
- Cast iron rotor for greater durability and longer life
- Includes 90° adjustable fittings for 3/8” hose
- Tilt mechanism: **X82** - 1A0043187N – tilt range of 48° and five locking positions
- **KIT F** - 1A0039664Y (optional): remote fill adapter

MODEL	P. No.	MOUNTING	DISPLACEMENT/ REVOLUTION	No. OF PISTONS	RELIEF VALVE SETTING	MAXIMUM WHEEL DIA.	WEIGHT
UP25T	1A0044028X	With X82 tilt	25 cc - 1.5 cu.in	5	70 Bar - 1000 PSI	406 mm - 16”	5 kg - 11 lbs
UP28T	1A0044027V	With X82 tilt	28 cc - 1.7 cu.in	5	70 Bar - 1000 PSI	406 mm - 16”	5 kg - 11 lbs
UP33T	1A0044026T	With X82 tilt	33 cc - 2.0 cu.in	7	70 Bar - 1000 PSI	406 mm - 16”	5 kg - 11 lbs
UP39T	1A0044025R	With X82 tilt	39 cc - 2.4 cu.in	7	70 Bar - 1000 PSI	406 mm - 16”	5 kg - 11 lbs
UP45T	1A0044029Z	With X82 tilt	45 cc - 2.7 cu.in	7	70 Bar - 1000 PSI	406 mm - 16”	5 kg - 11 lbs

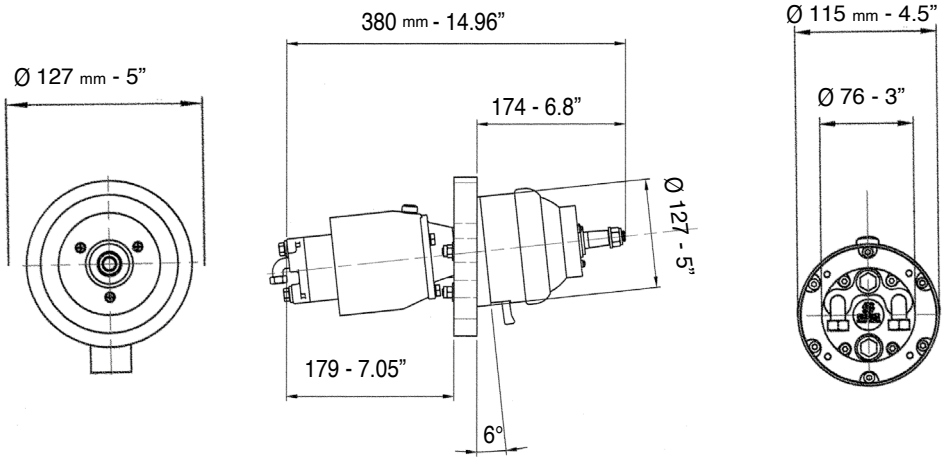

UP25T, UP28T, UP33T, UP39T, UP45T DIMENSIONS

UP28R - UP33R - UP39R - UP45R
Rear mount helms



X68





KIT F

- Available in four different displacement sizes
- Compact design
- Ball bearing piston race
- Built-in lock valve for positive rudder lock
- Integrated relief valve for over-pressure protection
- 3/4” tapered stainless steel shaft
- Easily accessible lock valve and shaft seal for replacement
- Cast iron cylinder rotor for greater durability and longer life
- White bezel included
- Complete with 90° adjustable fittings for 3/8” tube, except UP45-IR pump (straight fittings for 12 mm hose)
- **X68** - 1A0040894Z (optional) chrome plated bezel
- **KIT F** - 1A0039664Y (optional): remote fill adapter

MODEL	P. No.	MOUNTING	DISPLACEMENT/ REVOLUTION	No. OF PISTONS	RELIEF VALVE SETTING	MAXIMUM WHEEL DIA.	WEIGHT
UP28R	1A0042460Z	Rear mount	28 cc - 1.7 cu.in	5	70 Bar - 1000 PSI	710 mm - 28”	5 kg - 11 lbs
UP33R	1A0042457L	Rear mount	33 cc - 2.0 cu.in	7	70 Bar - 1000 PSI	710 mm - 28”	5 kg - 11 lbs
UP39R	1A0042454E	Rear mount	39 cc - 2.4 cu.in	7	70 Bar - 1000 PSI	710 mm - 28”	5 kg - 11 lbs
UP45R	1A0042466M	Rear mount	45 cc - 2.7 cu.in	7	70 Bar - 1000 PSI	710 mm - 28”	5 kg - 11 lbs

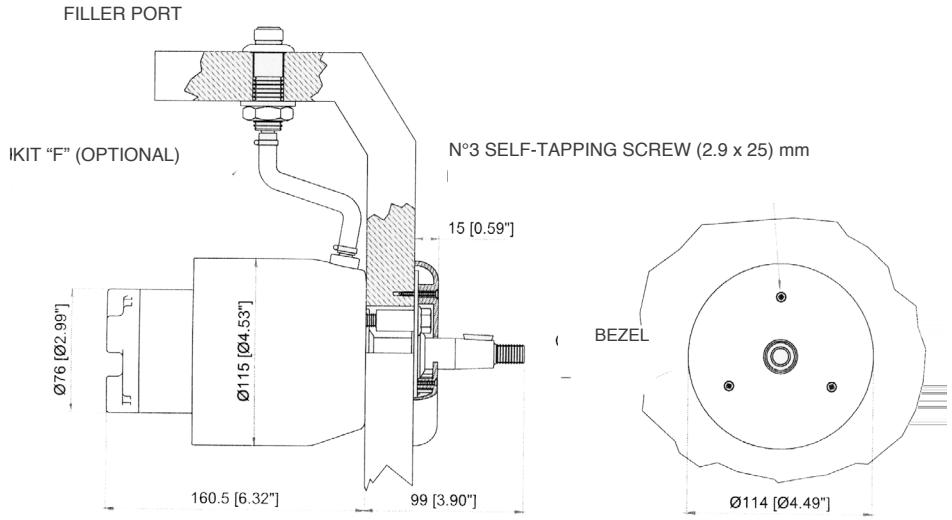

UP28R, UP33R, UP39R, UP45R DIMENSIONS

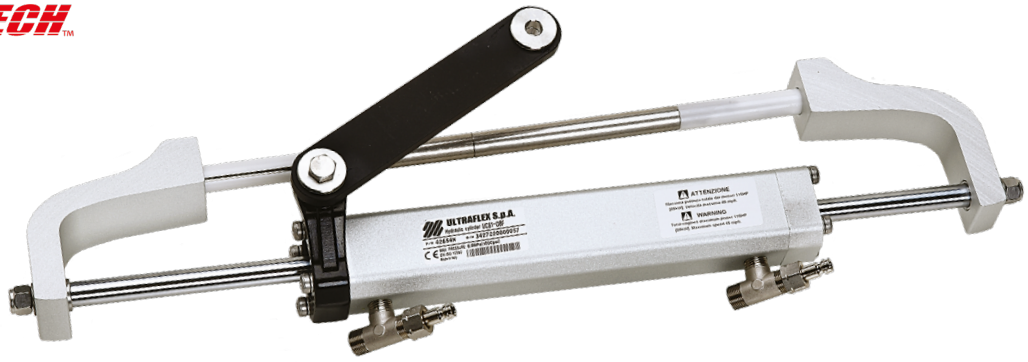

UC81-OBF - Balanced: the number of turns lock-to-lock is equal port to starboard and vice-versa.
Front mount cylinder for outboard engines up to 115 hp
Replaceable cylinder end caps

UC81-OBF can be installed port or starboard, according to the applications on the outboard engine

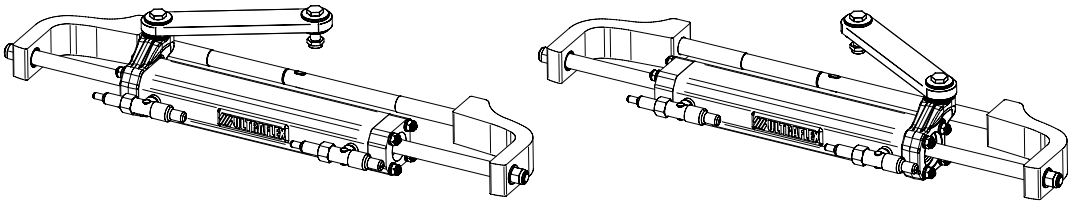

SPECIFICATIONS	UC81-OBF - 1A0042654N
Volume	81 cc - 4.9 cu. in
Output force	222 kg - 489 lbs
Inside diameter	27,4 mm - 1.08”
Stroke	186 mm - 7.3”
3/8” (9,5 mm) Fittings	For high pressure flex hose
Bleed fittings	DN5 Quick connect

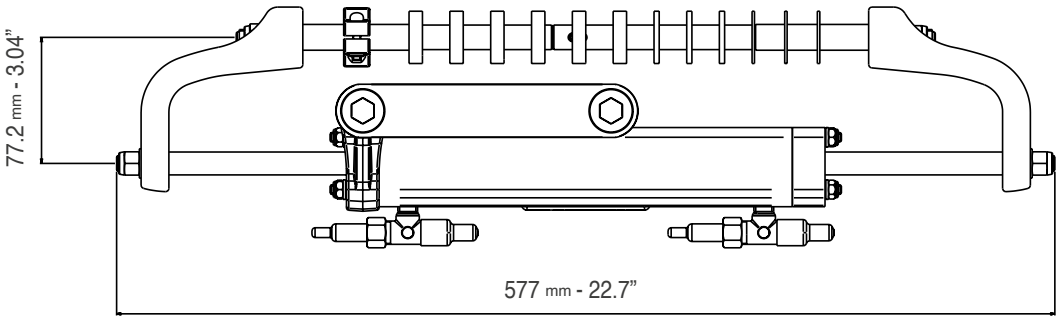

UC81-OBF DIMENSIONS

UC81-OBF
Applications

Single engine up to 115 hp and where the boat speed does not exceed 45 mph (40 knots)

Not intended for use in racing applications

WARNING
These recommendations should be used as a general reference only. For any further information please contact our Technical Service.

NOTE:
Suzuki® engines built from 1998 to 2008 installing UC81-OBF cylinder require optional **KIT SU** part No. 1A0041954W.

ENGINE	POWER	YEAR
Mercury® Mariner®	50 – 75 – 90 2S 100 – 115 EFI 2S 75 – 90 – 115 Optimax 2S 40 – 50 – 60 EFI 4S 75 – 80 – 90 EFI 4S 100 – 115 EFI 4S	1990-2008 1990-2007 2004-2018 2004-2018 2000-to date 2007-to date
Evinrude®	E40-E50-E55-E60 2S E75-E90 2S E115 2S V4	2004-2020 2004-2020 1995-2020
Yamaha®	60-70 2S 75C-90 2S 115C 2S F40G-F70 4S F30-F40-F60-F75-F80 EFI 4S F90-F100-F115 EFI 4S F115 F80-F100 4S F40D-F50F-F60C EFI 4S	1984-2008 1998-2008 1990-2008 2010-to date 1999-2007 1999-2007 2004-to date 1999-2007 2000-to date
Honda®	BF40-50-60-75-90 4S BF115D BF115A BF90 V-TEC 4S	1995-to date 1998-2009 2009-oto date 2008-to date
Suzuki®	DF40-50-60-70-80-90 4S DF100-115 4S DF100-115 4S	1998-to date 1998-2008 2008-to date
Tohatsu® Nissan®	75-115-120-140 2S 40-50-60-70-90-115 TLDI 4S BFT 60-75-80-90-100 4S BFT 115-150 4S 40-50-60-70-90 2S MFS 50-60-75-90-100-115 4S	2004-to date 2004-to date 2015-to date 2015-to date 2004-to date 2018-to date
Selva®	40XS-50 Madeira 2S 40XS-50 Bull shark 2S 40XS-60 Grey shark 2S 40XS-70 Mako Shark 2S 40XS-60 St.Tropez 2S 80 Portofino/Tigershark 2S 25 Kingfish 4S 40 Aruana 4S 40XS-40XSR-50-60 Dorado EFI 4S 40XSR EFI Murena 4S 80XS-100-100XSR EFI Marlin 4S 115-115XSR EFI Tarpon 4S 115 EFI Narwhal 4S	1995-to date 2000-to date
Johnson®	BJ90-115 4S BJ60-70 4S J90-115 V4 2S J150-175 V6 2S	2001-2007 2001-2007 1995-2007 1995-2007
PureCraft®	50 HP	2020-to date
Torqueedo®	Deep Blue 25, 50	2022-to date
Neander Shark®	DTORQUE 111	2020-to date
Parsun®	F40-F50-F60	2007-to date



UC95-OBF/1



UC95-OBF/2

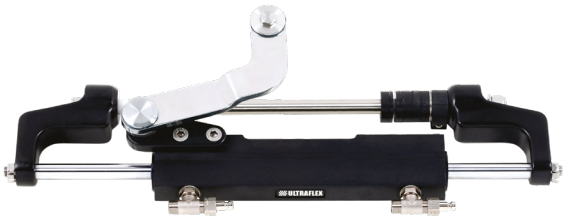

UC95-OBF/3

• UC95-OBF/1 – OBF/2 – OBF/3: Balanced: the number of wheel turns lock-to-lock is equal port to starboard or vice-versa
• Adjustable boss style fittings for easy installation
• High resistance stainless steel connection bolt (ULTRABOLT)
• Replaceable cylinder end caps

Innovative design (PATENTED):
• Split and pinned cylinder mounting rod for easy installation and bushings to prevent friction with engine tilt tube

• **Applications:**
The UC95-OBF front mount cylinder is recommended for use with outboard engines 175 hp total and where the boat speed does not exceed 55 mph (48 knots)
• Not intended for use in racing applications
NOTE: non suitable with starboard link arms LA1, LA2, LA3 for UC128-OBF cylinder.

MODEL	PART NO.	DESCRIPTION
UC95-OBF/1	1A0043515D	Front mount cylinder for outboard engines up to 175 hp total
UC95-OBF/2	1A0043535K	Front mount cylinder for outboard engines up to 175 hp total
UC95-OBF/3	1A0043516F	Front mount cylinder for outboard engines up to 175 hp total

Volume	95 cc - 5.8 cu.in.
Output force	278 kg (613 lbs)
Internal diameter	30 mm (1.18”)
Stroke	186 mm (7.3”)
Fittings for high pressure flex hose	3/8”
Bleed fittings	DN5 quick disconnect

UC95-OBF
Front mount cylinder

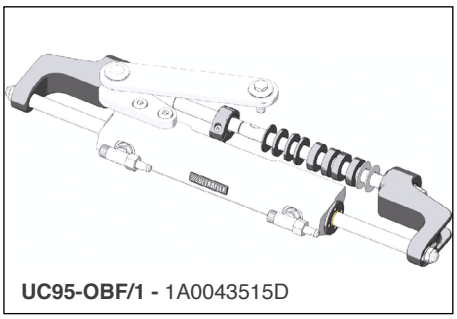

UC95-OBF/1 - 1A0043515D

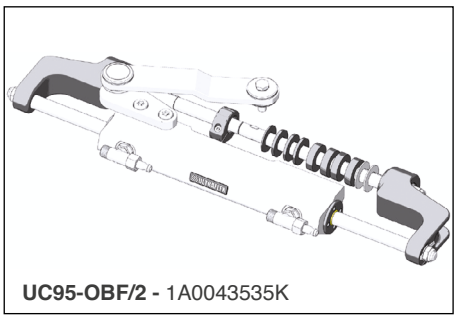

UC95-OBF/2 - 1A0043535K

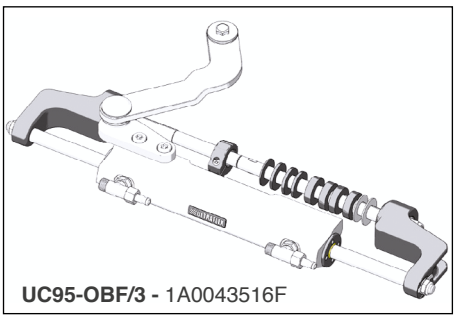

UC95-OBF/3 - 1A0043516F

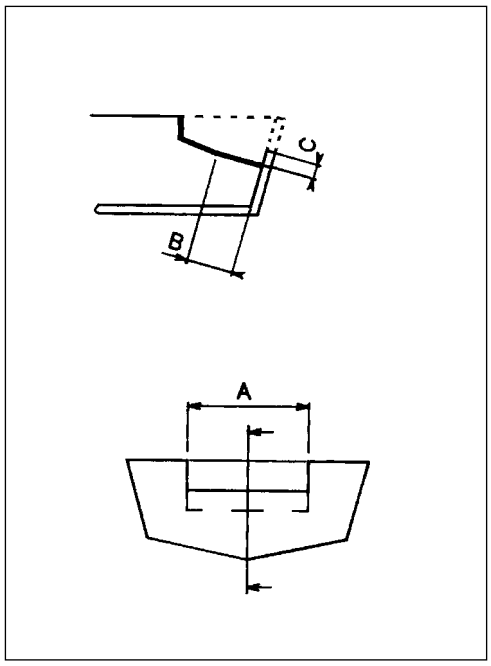

Splashwell dimension requirements	
Engine No.	1
A	560 mm (21.25”)
B	305 mm (12”)
C	152 mm (5.98”)

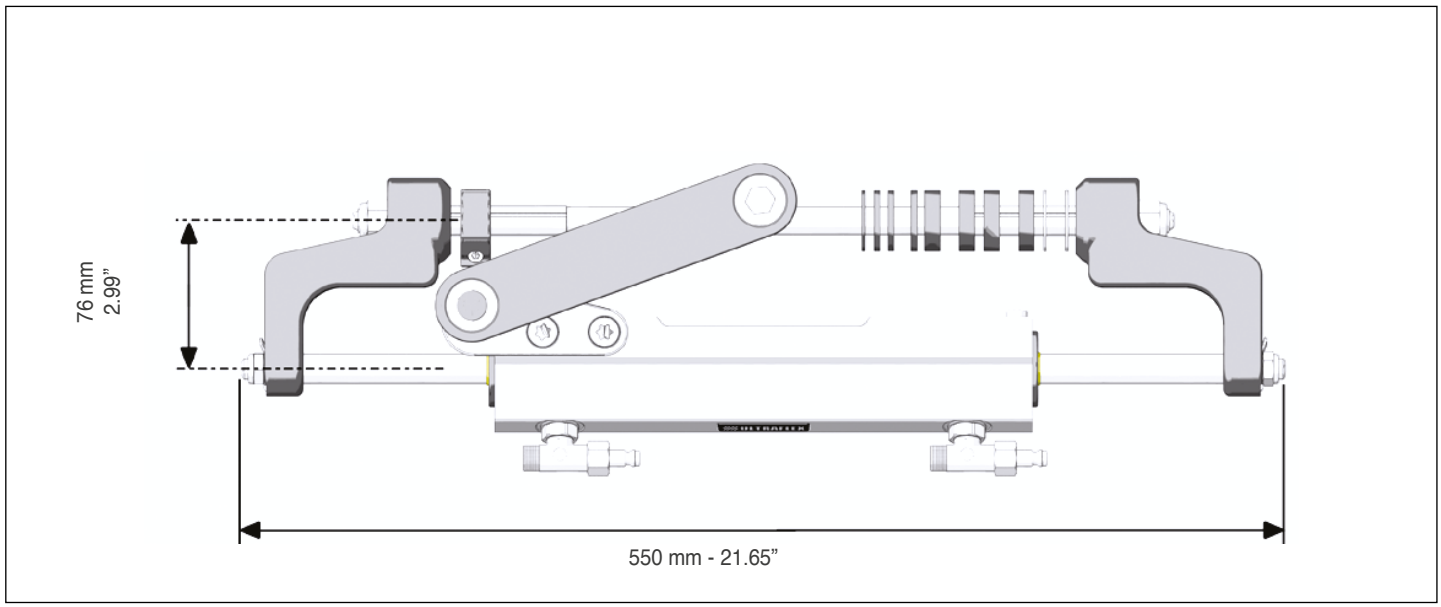

UC95-OBF DIMENSIONS

ENGINE	MODEL	YEAR	CYLINDER	P. No.
Mercury® Mariner®	100-115-150 EFI 2S	1991-2007	UC95-OBF/1	1A0043515D
	50-75-90 2S	1990-2008	UC95-OBF/1	1A0043515D
	75-90-115 Optimax 2S	2004-2018	UC95-OBF/3	1A0043516F
	125-135-150 -175 Optimax 2S	1999-2018	UC95-OBF/1	1A0043515D
	40-50-60 EFI 4S	2004-to date	UC95-OBF/1	1A0043515D
	75-80-90 EFI 4S / PRO XS / SEAPRO	2000-to date	UC95-OBF/1	1A0043515D
	100-115-150 EFI 4S / PRO XS / SEAPRO	2007-to date	UC95-OBF/1	1A0043515D
	175-V6 4S / SEAPRO	2018-to date	UC95-OBF/1	1A0043515D
Evinrude®	E40-E50-E55-E60 2S	2004-2020	UC95-OBF/1*	1A0043515D
	E75-E90 2 Stroke	2004-2020	UC95-OBF/1*	1A0043515D
	E115-E130 -E135 2 Stroke V4	1995-2020	UC95-OBF/1*	1A0043515D
	E150 -175 2 Stroke V6	1995-2020	UC95-OBF/1*	1A0043515D
Yamaha®	60-70 2S	1984-2008	UC95-OBF/1	1A0043515D
	75C-90 2S	1998-2008	UC95-OBF/1*	1A0043515D
	115C-130B -150F 2S	1990-2008	UC95-OBF/1*	1A0043515D
	150-175 HPDI VMAX 2S	2000-2007	UC95-OBF/1*	1A0043515D
	F60-F75-F80 EFI 4S	1999-2007	UC95-OBF/1	1A0043515D
	F90-F100-F115 F150 EFI 4S	1999-2007	UC95-OBF/1	1A0043515D
	F115-F150-F175 L4 4S	2004-to date	UC95-OBF/1	1A0043515D
Honda®	BF75-80-90-100 4S	1995-to date	UC95-OBF/1	1A0043515D
	BF115D - BF130A	1998-2009	UC95-OBF/3	1A0043516F
	BF115A 4S	2009-to date	UC95-OBF/1	1A0043515D
	BF135-150 4S	2005-to date	UC95-OBF/1	1A0043515D
	BF175-4S	2001-to date	UC95-OBF/1	1A0043515D
Suzuki®	DF70-80-90 4S	1998-to date	UC95-OBF/1*	1A0043515D
	DF100-115-140 4S	2008-to date	UC95-OBF/1	1A0043515D
	DF150-175 4S	2006-to date	UC95-OBF/1	1A0043515D
Tohatsu® Nissan®	115-120-140 2S	2004-to date	UC95-OBF/1*	1A0043515D
	70-90-115 TLDI 4S	2004-to date	UC95-OBF/1	1A0043515D
	BFT60-75-80-90-100 4S	2015-to date	UC95-OBF/1	1A0043515D
	BFT115-150 4S	2015-to date	UC95-OBF/1	1A0043515D
	MFS 50-60-75-90-100-115- 140 4S	2018-to date	UC95-OBF/1	1A0043515D
Selva®	80 Portofino/Tigershark 2S	1995-2008	UC95-OBF/1	1A0043515D
	150 WHITE SHARK 2S	2001-2007	UC95-OBF/1*	1A0043515D
	100EFI Marlin - 115 EFI Narwhal	2001-2007	UC95-OBF/1*	1A0043515D
	100-150EFI Killer Whale 4S	2000-to date	UC95-OBF/1	1A0043515D
Johnson®	BJ90-115-140 4S	2001-2007	UC95-OBF/1	1A0043515D
	BJ70 4S	2001-2007	UC95-OBF/1*	1A0043515D
	J90-115 V4 2S	1995-2007	UC95-OBF/1*	1A0043515D
	J150 -175 V6 2S	1995-2007	UC95-OBF/1*	1A0043515D
Neander Shark®	DTORQUE 111	2020-to date	UC95-OBF/1	1A0043515D
Parsun®	F60-F85-F115	2007-to date	UC95-OBF/1	1A0043515D

WARNING
The UC95-OBF front mount cylinder is recommended for use with outboard engines 175 hp total and less and where the boat speed does not exceed 55 mph (48 knots)

Not intended for use in racing applications

WARNING
These recommendations should be used as a general reference only. For any further information please contact our Technical Service.

NOTE:
Suzuki® engines built from 1998 to 2008 installing UC95-OBF cylinder require optional **KIT SU** part No. 1A0041954W.

***NOTE:** The **UC95-OBF/2** (1A0043535K) cylinder allows for a wide tilting angle.

UC128-OBF
Front mount cylinder



UC128-OBF

- UC128-OBF – Balanced: the number of wheel turns lock-to-lock is equal port to starboard or vice-versa
- Adjustable boss style fittings for easy installation
- High resistance stainless steel connection bolt (ULTRABOLT)
- Replaceable cylinder end caps

- UC128-OBF cylinder is built with heavy duty stainless steel cylinder rod, seals and link assemblies, is simple to install and fits almost every 2 and 4 stroke outboard engine on the market.
- UC128-OBF cylinders are recommended for use with UP25, UP28, UP33 and UP39 series helms and preassembled hoses (Kit OB and Kit OB/R5).
- In the applications with dual cylinder it is necessary to order a UC128-OBF cylinder (link arm attached to the starboard side of the cylinder) and a port UC128P-OBF cylinder (link arm attached to the port side of the cylinder). See tie bars section to select the required model for dual engine/single cylinder and dual engine/dual cylinder applications.

Applications: UC128-OBF front mount cylinder is not recommended for use in installations where the boat speed exceeds 55 mph (48 knots) / (65 mph (56 knots) in dual engine, dual cylinder and counter rotating engines application). Not intended for use in racing applications.

MODEL	PART NO.	DESCRIPTION
UC128-OBF/1	1A0043231N	Front mount cylinder, starboard version
UC128-OBF/2	1A0043232R	Front mount cylinder, starboard version
UC128-OBF/3	1A0043233T	Front mount cylinder, starboard version
UC128P-OBF/1	1A0043234V	Front mount cylinder, port version
UC128P-OBF/2	1A0043235X	Front mount cylinder, port version

Volume	120 cc - 7.3 cu.in.
Output force	450 kg (992 lbs)
Internal diameter	35 mm (1.37”)
Stroke	185 mm (7.28”)
Fittings for high pressure flex hose	3/8”
Bleed fittings	DN5 quick connect



UC128P-OBF

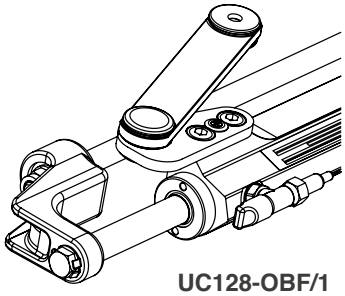

UC128-OBF/1

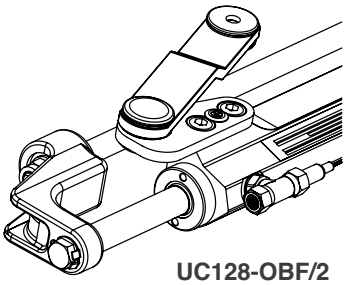

UC128-OBF/2

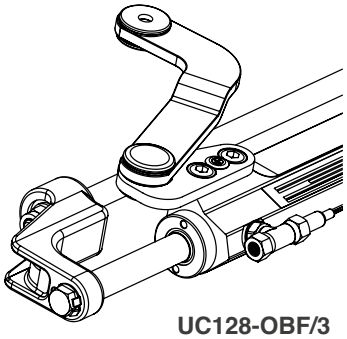

UC128-OBF/3

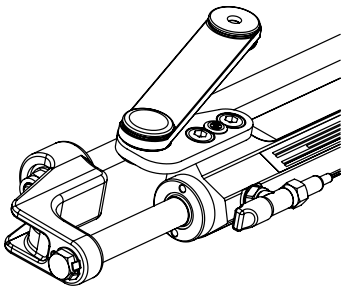

UC128P-OBF/1

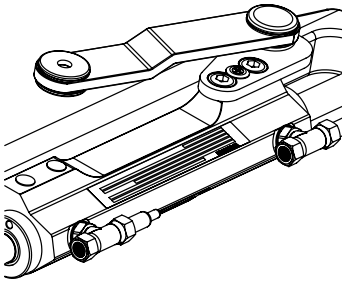

UC128P-OBF/2

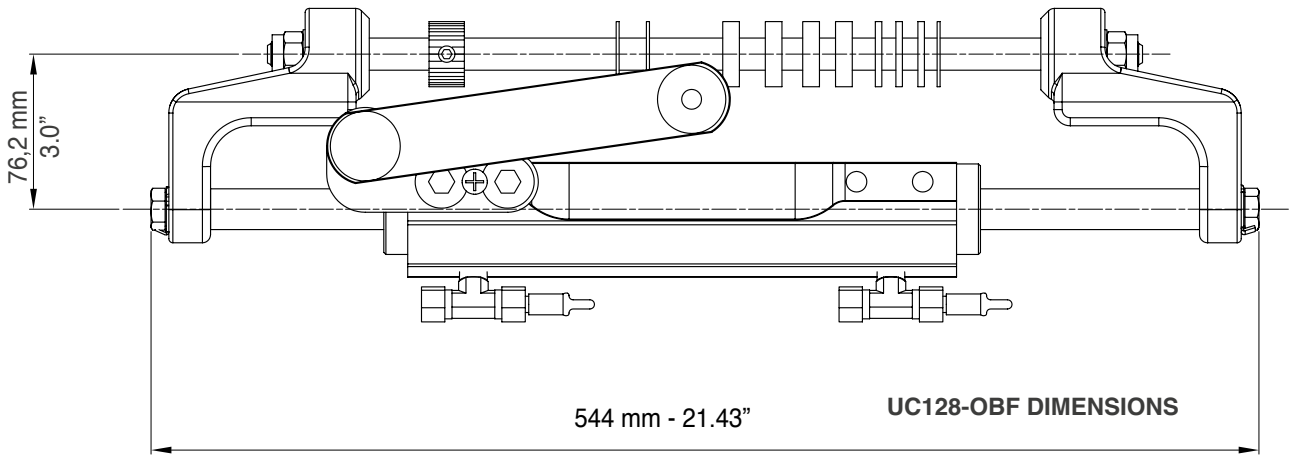

UC128-OBF DIMENSIONS

UC128-OBF
Front mount cylinder

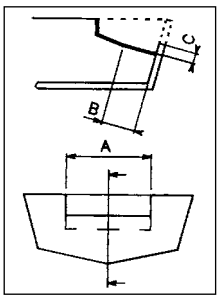

Splashwell dimension requirements		
Engine No.	1	2
A	540 mm (21.25”)	1110 mm (43.70”)
B	152 mm (5.98”)	152 mm (5.98”)
C	152 mm (5.98”)	152 mm (5.98”)

For twin engine applications minimum engine center distance is 650 mm (26”)

UC128-OBF link arms

LA1, LA2, LA3 link arm kits for UC128-OBF cylinder and LA1P, LA2P link arm kits for UC128P-OBF port cylinder can also be supplied separately for the first application only, in case the UC128-OBF cylinder needs to be adapted to the already installed outboard engine (see application guide).

WARNING: LA1, LA2, LA3 and LA1P, LA2P link arm kits are recommended for use on the first installation **only** and **not** as a retrofit. Installation has to be made by qualified technicians only.
The tightening load to be applied to the screws **(included)** of the link arm kit is recommended on the Installation Manual and the mounting instructions supplied with the products.

“STARBOARD” link arms



LA1 1A0040045A
for UC128-OBF/1



LA2 1A0040046C
for UC128-OBF/2



LA3 1A0040073F
for UC128-OBF/3

“PORT” link arms



LA1P 1A0040104P
for UC128P-OBF/1



LA2P 1A0040105S
for UC128P-OBF/2

UC128-OBF
Cylinder applications

ENGINE	MODEL	YEAR	CYLINDER	P. NO.
Mercury® Mariner®	115-125-150 EFI 2S	1990-2007	UC128-OBF/1	1A0043231N
	225-250 EFI 2S	2000-2007	UC128-OBF/1	1A0043231N
	75-90-115 OPTIMAX	2004-2018	UC128-OBF/3	1A0043233T
	135-150-175 OPTIMAX	1999-2018	UC128-OBF/1	1A0043231N
	200-225-250 OPTIMAX	1999-2018	UC128-OBF/1	1A0043231N
	RACING 300 OPTIMAX	1999-2011	UC128-OBF/1	1A0043231N
	100-115 EFI 4S	2007-to date	UC128-OBF/1	1A0043231N
	250 SALTWATER EFI 4S	2007-2011	UC128-OBF/1	1A0043231N
	135-150-175-200 VERADO L4	2004-2012	UC128-OBF/1	1A0043231N
	FOURSTROKE / PRO XS 175-200 V6	2018-to date	UC128-OBF/1	1A0043231N
	FOURSTROKE / PRO XS 225-300 V8	2018-to date	UC128-OBF/1	1A0043231N
Evinrude®	E75-E90 2S	2004-to date	UC128-OBF/2	1A0043232R
	E115-E130-E135 2S V4	1995-2020	UC128-OBF/2	1A0043232R
	E150-E175-E200-E225-E250-E300 2S V6	1995-2020	UC128-OBF/2	1A0043232R
Yamaha®	115C-130B 2S	1990-2008	UC128-OBF/2	1A0043232R
	75C-90 2S	1998-2008	UC128-OBF/2	1A0043232R
	F70 4S	2010-to date	UC128P-OBF/1	1A0043234V
	150F-200F-250G 2S	1990-2008	UC128-OBF/2	1A0043232R
	150 HPDI VMAX 2S	1996-2007	UC128-OBF/2	1A0043232R
	175-200-225-250-300 HPDI VMAX 2S	2000-2008	UC128-OBF/2	1A0043232R
	F115-F150 EFI 4S	2000-2008	UC128-OBF/2	1A0043232R
	F200-F225-F250 4S	1999-2007	UC128-OBF/2	1A0043232R
	F115-F130-F150D- F150F-F175A-F200F-F200G L4	2002-to date	UC128-OBF/1	1A0043231N
	F200-F225-F250-F300 V6 4S	2004-to date	UC128-OBF/2	1A0043232R
Honda®	BF75-BF90 4S	1995-to date	UC128-OBF/1	1A0043231N
	BF115-BF130 4S	1998-to date	UC128-OBF/3	1A0043233T
	BF135-BF150 4S	2005-to date	UC128-OBF/1	1A0043231N
	BF140-150 V-TEC 4S	2008-to date	UC128-OBF/1	1A0043231N
	BF175-BF200-BF225-BF250 4S	2001-to date	UC128-OBF/1	1A0043231N
Suzuki®	DF70-80-90 4S	1998-to date	UC128-OBF/2	1A0043232R
	DF100-115-140 4S	2008-to date	UC128-OBF/1	1A0043231N
	DF150-175-DF200 L4 4S	2006-to date	UC128-OBF/1	1A0043231N
	DF200-DF225-DF250-DF300-V6 4S	2004-to date	UC128-OBF/2	1A0043232R
Tohatsu®	115-120-140 2S	2004-to date	UC128-OBF/2	1A0043232R
	70-90-115 TLDI 4S	2004-to date	UC128-OBF/1	1A0043231N
	MFS 50-60-75-90-100-115-140 4S	2018-to date	UC128-OBF/1	1A0043231N
	BFT 115-150-200-225-250 4S	2014-to date	UC128-OBF/1	1A0043231N
	BFT 60-75-80-90-100 4S	2015-to date	UC128-OBF/1	1A0043231N
Selva®	80 PORTOFINO/TIGERSHARK 2S	1995-2008	UC128-OBF/1	1A0043231N
	150 WHITE SHARK 2S	2001-2007	UC128-OBF/2	1A0043232R
	100EFI MARLIN-115 EFI NARWHAL	2000-to date	UC128-OBF/2	1A0043232R
	225 BEAKED WHALE 4S	2019-to date	UC128-OBF/2	1A0043232R
	100-150EFI KILLER WHALE 4S- 200 SEI WHALE 4S	2000-to date	UC128-OBF/1	1A0043231N
Johnson®	BJ90-115-140 4S	2001-2007	UC128-OBF/1	1A0043231N
	J90-115 V4 2S	1995-2007	UC128-OBF/2	1A0043232R
	J150-175 V6 2S	1995-2007	UC128-OBF/2	1A0043232R
	J200-225 V6 4S	2004-2007	UC128-OBF/2	1A0043232R
OXE®	125-150-175-200HP DIESEL	2018-to date	UC128-OBF/1	1A0043231N
	300HP DIESEL	2020-to date	UC128-OBF/1	1A0043231N
COX®	300HP	2020-to date	UC128-OBF/4	-
Neander Shark®	DTORQUE 111	2018-to date	UC128-OBF/1	1A0043231N
Parsun®	F300	2023-to date	UC128-OBF/2	1A0043232R
E-MOTION®	180HP	2022-to date	UC128-OBF/1	1A0043231N

NOTE:
Suzuki® engines built from 1998 to 2008 installing UC128-OBF/1 cylinder require optional **KIT SU** - 1A0041954W.
For higher horsepower applications, high performance SilverSteer™ cylinder is recommended.

WARNING
These recommendations should be used as a general reference only. Final selection should be made with the assistance of a qualified installation technician.
For any further information please contact our Technical Service.

UC128-OBF
Order guide

SYSTEM	APPLICATION	WHEEL TURNS	COMPONENTS	MODEL	Q.TY
Single engine Single cylinder 	Up to 300 hp max	4,8 (UP25) 4,3 (UP28)	Cylinder Helm pump Hose Kit Oil Steering wheel	UC128-OBF UP25 or UP28 KIT OB OL 150 (Wheel selection)	1 1 1 2 1
For a second station add: **1 UP25 or UP28 helm pump, 1 KIT OB-2S fitting kit, 1 KIT OB, 1 OL 150, 1 steering wheel**					
Dual engine Single cylinder 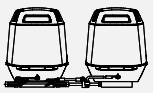	Up to 300 hp max (non-counter rotating engine) Up to 500 hp max (counter rotating engine)	4,8 (UP25) 4,3 (UP28)	Cylinder Helm pump Hose Kit Oil Tie bar Steering wheel	UC128-OBF UP25 or UP28 KIT OB OL 150 A96 (Wheel selection)	1 1 1 2 1 1
For a second station add: **1 UP25 or UP28 helm pump, 1 KIT OB-2S fitting kit, 1 KIT OB, 1 OL 150, 1 steering wheel**					
Dual engine Dual cylinder 	Up to 500 hp max (non-counter rotating engines) Up to 600 hp max (counter rotating engines)	6,1 (UP39) 5,3 (UP45)	Cylinder Cylinder Port Helm pump Hose Kit Oil Tie bar Steering wheel Connection Kit	UC128-OBF UC128P-OBF UP39 or UP45 KIT OB OL 150 A95 (Wheel selection) KIT OB-2C	1 1 1 1 3 1 1 1
For a second station add: **1 UP39 or UP45 helm pump, 1 KIT OB-2S fitting kit, 1 KIT OB, 2 T fittings 39502 V, 1 OL 150, 1 steering wheel**					

WARNING
The UC128-OBF front mount cylinder is not recommended for use in installations where the boat speed exceeds **55 mph (48 knots)** 65 mph (56 knots) in dual engine, dual cylinder and counter rotating engines application.
Not intended for use in racing applications.

Dual engine dual cylinder application diagram

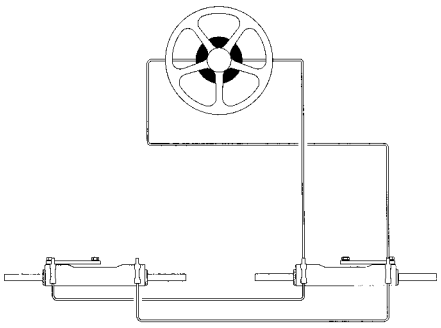

NOTE:
Three outboard
engine applications
are available with UC130-SVS cylinder.

For triple outboard engine, dual cylinder applications, please refer to tie-bar section.

For any further and detailed information, please contact our Technical Service.

NOTE:
For high performance applications SilverSteer™ systems are recommended.

UC68-OBS
Side Mount Cylinder

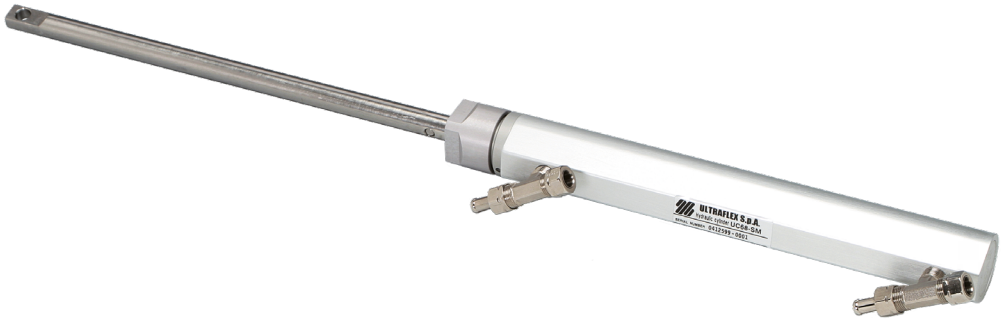

- UC68-OBS – Unbalanced: the number of wheel turns lock-to-lock is not equal port to starboard and vice-versa
- This side mount cylinder features a turning nut for a fast and easy installation to the engine tube
- Clearance required at the engine tube side: 13.3” (340 mm)

APPLICATIONS:
Recommended for use where max boat speed do not exceed 46 mph (40 knots)
Also available in Steering kit: GOTECH-OBS, HYCO-OBS and HYCO-OBS/M

Volume	68/100 cc - 7.3 cu.in.
Output force	185/270 kg (408/595 lbs)
Internal diameter	25 mm (0.98”)
Stroke	203 mm (8”)
Fittings for high pressure flex hose	3/8”

Model	Part No.	Description
UC68-OBS	1A0039784J	Side mount cylinder for outboard engines up to 150 hp

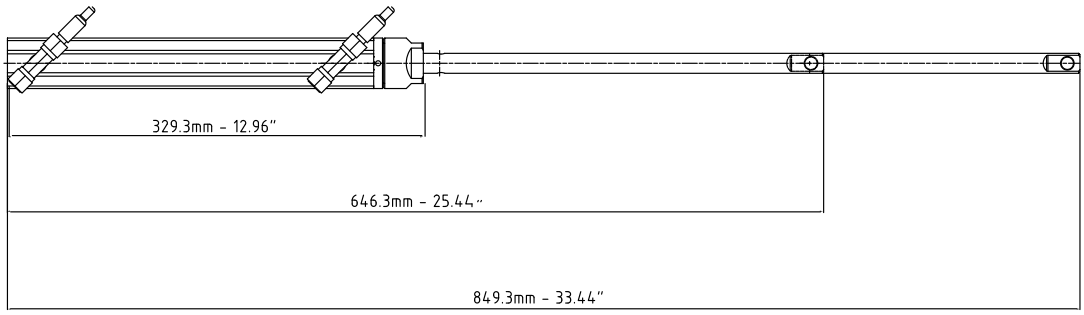

UC68-OBS

Order guide

SYSTEM	APPLICATION	WHEEL TURNS	COMPONENTS	MODEL	Q.TY
Single engine Single cylinder 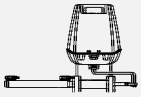	Up to 150 hp max	3,4/5	Cylinder Helm pump Hose Kit Oil Steering wheel	UC68-OBS UP20 KIT OB OL 150 (Wheel selection)	1 1 1 2 1

UC132-OBS
Side mount cylinder

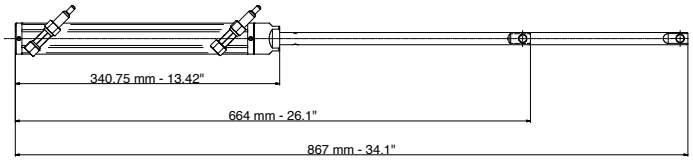



UC132-OBS

UC132-OBS Unbalanced: the wheel number of turns lock-to-lock is not equal port to starboard and vice-versa
- This side mount cylinder features a turning nut for a fast and easy installation to the engine tube
- Clearance required at the engine tube side: 375 mm (14.76")

APPLICATIONS: not recommended for use in installations where the boat speed exceeds 55 mph (48 knots) or 60 mph (52 knots) for dual cylinder / dual engines installations
Not intended for use in racing applications

WARNING: UC132-OBS cylinder is not intended for use with 105 Bar (1500 PSI) SilverSteer serie helms.

Volume	132/163 cc - 8/9.95 cu.in.
Output force	464/574 kg (1023/1265 lbs)
Internal Diameter	25 mm (0.98")
Corsa	203 mm (8")
Fittings for high pressure flex hose	3/8"

Model	Part No.	Description
UC132-OBS	1A0039430W	Side mount Cylinder

ORDER GUIDE

SYSTEM	APPLICATION	WHEEL TURNS	COMPONENTS	MODEL	Q.TY
Single engine Single cylinder 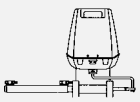	Up to 250 hp max	5,3/6,5 (UP25) 4,7/5,8 (UP28)	Cylinder Helm pump Hose Kit Oil Steering wheel	UC132-OBS UP25 or UP28 KIT OB OL 150 (Wheel selection)	1 1 1 2 1
For a second station add: **1 UP25 or UP28 helm pump, 1 KIT OB-2S fitting kit, 1 KIT OB, 1 OL 150, 1 steering wheel**					
Dual engine Single cylinder 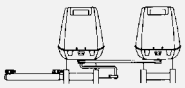	Up to 250 hp max (non-counter rotating engine) Up to 300 hp max (counter rotating engine)	5,3/6,5 (UP25) 4,7/5,8 (UP28)	Cylinder Helm pump Hose Kit Oil Tie bar Steering wheel	UC132-OBS UP25 or UP28 KIT OB OL 150 A88 or A92 (Wheel selection)	1 1 1 2 1 1
For a second station add: **1 UP25 or UP28 helm pump, 1 KIT OB-2S fitting kit, 1 KIT OB, 1 OL 150, 1 steering wheel**					
Dual engine Dual cylinder 	Up to 300 hp max (non-counter rotating engines) Up to 300 hp max (counter rotating engines)	6,7/8,3 (UP39) 5,8/7,3 (UP45)	Cylinder Helm pump Hose Kit Oil Tie bar Steering wheel Connection Kit	UC132-OBS UP39 or UP45 KIT OB OL 150 A88 or A92 (Wheel selection) KIT OB-2C	2 1 1 3 1 1 1
For a second station add: **1 UP39 or UP45 helm pump, 1 KIT OB-2S fitting kit, 1 KIT OB, 2 T fittings** 1A0039502V**, 1 OL 150, 1 steering wheel** **WARNING: THIS APPLICATION REQUIRES THAT THE THREADS ON THE TILT TUBE EXTEND AT LEAST 15 mm (0.6") FROM BOTH SIDES.**					

Hydraulic hose kit
for GOTECH™ steering systems

KIT OB-GT/M - Hose kit with preassembled fittings at one end for single station application

It consists of a pair of high pressure flexible hose dia. 1/4” with fittings, featuring turning nuts, preassembled at one end only and supplied with 2 non assembled fittings.
Recommended for use with GOTECH™ steering systems. Available on 6 m (19.7’) standard length that can be cut to fit the desired application.

KIT OB-GT/M	LENGTH	PART No.
KIT OB-GT/M-60	6,00 m – 19.7 ft	1A0042669C



KIT OB-GT/M

KIT OB-GT - Hose kit with preassembled fittings at both ends

It consists of a pair of high pressure flexible hose dia. 1/4” with fittings, featuring turning nuts, preassembled at both ends.
Recommended for use with GOTECH™ steering systems. Available in different hose lengths.

KIT OB-GT	LENGTH	PART No.
KIT OB-GT 30	3,00 m – 9.8 ft	1A0043111C
KIT OB-GT 35	3,50 m – 11.5 ft	1A0043112E
KIT OB-GT 40	4,00 m – 13.2 ft	1A0043113G
KIT OB-GT 45	4,50 m – 14.8 ft	1A0043114J
KIT OB-GT 50	5,00 m – 16.4 ft	1A0043106K
KIT OB-GT 55	5,50 m – 18.0 ft	1A0043115L
KIT OB-GT 60	6,00 m – 19.7 ft	1A0043116N
KIT OB-GT 65	6,50 m – 21.3 ft	1A0043117R
KIT OB-GT 70	7,00 m – 22.9 ft	1A0043118T



KIT OB-GT

KIT OB-GT/R5 - Hydraulic hose kit

Two high pressure flexible hoses with pre-crimped brass fittings and R5 bulkhead fittings.
Recommended for use with GOTECH™ steering systems.Available in different hose lengths.

KIT OB-GT/R5	LENGTH	PART No.
KIT OB-GT/R5 30	3,00 m – 9.8 ft	1A0043123K
KIT OB-GT/R5 35	3,50 m – 11.5 ft	1A0043147A
KIT OB-GT/R5 40	4,00 m – 13.2 ft	1A0043148C
KIT OB-GT/R5 45	4,50 m – 14.8 ft	1A0043149E
KIT OB-GT/R5 50	5,00 m – 16.4 ft	1A0043150N
KIT OB-GT/R5 55	5,50 m – 18.0 ft	1A0043151R
KIT OB-GT/R5 60	6,00 m – 19.7 ft	1A0043152T
KIT OB-GT/R5 65	6,50 m – 21.3 ft	1A0043153V
KIT OB-GT/R5 70	7,00 m – 22.9 ft	1A0043154X



KIT OB-GT/R5

KIT for autopilot application with GOTECH™ K18 - 1A0043414X

Components:
2x T fittings
8x reusable fittings for TU 1/4
3x 1/4 NPT 9/16-24 UNEF straight fittings
1x 1/8 NPT 9/16-24 UNEF straight fitting
TU1/4 hose x10 m (32 ft)
TU95 hose x5 m (16 ft)



K18

High pressure flexible hoses

KIT OB - Hydraukic hose kit

Two high pressure flexible hoses with pre-crimped brass fittings and bend restrictors on one end. Recommended for use with all Ultraflex standard helms with 70 Bar (1000 psi) relief valves. With SilverSteer™ and MasterDrive™ systems, use KIT OB-SVS.
Available lengths: from 3,00 m (9.8 ft) to 9,00 m (29.5 ft) with 0,5 m (1.6 ft) increments.

KIT OB	LENGTH	P. No.
KIT OB-30	3,00 m - 9.8 ft	1A0040852G
KIT OB-35	3,50 m - 11.5 ft	1A0040853J
KIT OB-40	4,00 m - 13.2 ft	1A0040752C
KIT OB-45	4,50 m - 14.8 ft	1A0040753E
KIT OB-50	5,00 m - 16.4 ft	1A0040754G
KIT OB-55	5,50 m - 18.0 ft	1A0040755J
KIT OB-60	6,00 m - 19.7 ft	1A0040749P
KIT OB-65	6,50 m - 21.3 ft	1A0040648H
KIT OB-70	7,00 m - 22.9 ft	1A0040796Z
KIT OB-75	7,50 m - 24.6 ft	1A0040854L
KIT OB-80	8,00 m - 26.3 ft	1A0040855N
KIT OB-85	8,50 m - 27.8 ft	1A0040856R
KIT OB-90	9,00 m - 29.5 ft	1A0040857T



KIT OB

KIT OB/R5 - Hydraulic hose kit

Two high pressure flexible hoses with pre-crimped brass fittings, R5 bulkhead fittings and bend restrictors on both ends. Recommended for use with all Ultraflex standard helms with 70 Bar (1000 psi) relief valves. With SilverSteer™ and MasterDrive™ systems, use KIT OB-SVS.
Available lengths: from 3,00 m (9.8 ft) to 9,00 m (29.5 ft) with 0,5 m (1.6 ft) increments.

KIT OB/R5	LENGTH	P. No.
KIT OB/R5-30	3,00 m - 9.8 ft	1A0040835G
KIT OB/R5-35	3,50 m - 11.5 ft	1A0040836J
KIT OB/R5-40	4,00 m - 13.2 ft	1A0040837L
KIT OB/R5-45	4,50 m - 14.8 ft	1A0040838N
KIT OB/R5-50	5,00 m - 16.4 ft	1A0040839R
KIT OB/R5-55	5,50 m - 18.0 ft	1A0040840Z
KIT OB/R5-60	6,00 m - 19.7 ft	1A0040841B
KIT OB/R5-65	6,50 m - 21.3 ft	1A0040842D
KIT OB/R5-70	7,00 m - 22.9 ft	1A0040843F
KIT OB/R5-75	7,50 m - 24.6 ft	1A0040844H
KIT OB/R5-80	8,00 m - 26.3 ft	1A0040845 K
KIT OB/R5-85	8,50 m - 27.8 ft	1A0040846M
KIT OB/R5-90	9,00 m - 29.5 ft	1A0040847P

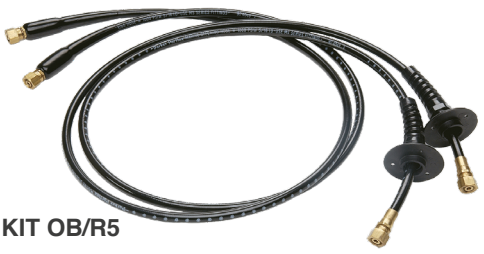

KIT OB/R5

KIT OB/M - Hose kit with preassembled fittings at one end - single station application

It consists of a pair of high pressure flexible hose with fittings featuring turning nuts preassembled at one end only. It is supplied with 2 non assembled fittings and 2 reinforcing sleeves. Not recommended for use with SilverSteer™ and MasterDrive™ helms (1500 psi). Available in three lengths of 6 m, 9 m and 15 m.

KIT OB/M	LENGTH	P. No.
KIT OB/M-60	6,00 m - 19.7 ft	1A0041708E
KIT OB/M-90	9,00 m - 29.5 ft	1A0041709G
KIT OB/M-150	15,00 m - 49.2 ft	1A0042565P



KIT OB/M

KIT OB-2C - Dual Cylinder/Dual engine connection kit

Two high pressure flexible hoses with pre-crimped fittings and bend restrictors.
Not recommended for use with SilverSteer™ Series cylinders.
Three lengths available: 70 cm, 90 cm, 120 cm

KIT OB-2C	LENGTH	P. No.
KIT OB-2C-07	0,7 m - 2.30 ft	1A0041149U
KIT OB-2C-09	0,9 m - 2.95 ft	1A0040680D
KIT OB-2C-12	1,20 m - 3.95 ft	1A0040686S



KIT OB-2C

KIT OB-2S-5/16 - 1A0043401M Kit for a second steering station or autopilot for hydraulic steering systems with 5/16” hose (TU 5/16)

Components:
2x T fittings
8x reusable fittnigs for TU5/16
4x 1/4 NPT 9/16-24 UNEF straight fittings
2x 1/8 NPT 9/16-24 UNEF straight fitting
TU95 hose x10 m (32 ft)
TU5/16 hose x10 m (32 ft)
1x non-vented cap

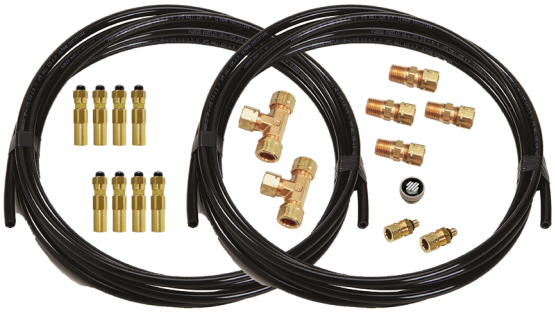

KIT OB-2S-5/16

UP28F-SVS - UP33F-SVS - UP39F-SVS
High Performance front mount helms

SilverSteer™







X72

SilverSteer™ SVS helms have been specifically designed for high torque outboard applications such as bass boats, and boats with shallow dead rise and high horsepower engines.
Featuring a 1500 psi (105 Bar) pressure valve, SilverSteer™ helms will deliver very precise steering at all torque loads.
The SVS helms have to be coupled with the UC130-SVS cylinders and the Kit OB-SVS hoses, which are also specifically designed for high torque applications. SVS Helm pumps feature stainless steel shafts and 90° adjustable nickel-plated brass fittings.

- Available in three different displacement sizes
- Compact design
- Ball bearing piston race
- Built-in lock valve for positive rudder lock
- **Integrated relief valve for over-pressure protection 105 bar (1500 psi)**
- 3/4" tapered stainless steel shaft
- Easily accessible lock valve and shaft seal for replacement
- Cast iron rotor for greater durability and longer life
- Complete with 90° adjustable fittings for 3/8" hose
- Tilt mechanism: **X72** – 1A0043140K Tilt range of 60° and five locking positions.

WARNING: SilverSteer™ helm pumps are always to be installed in conjunction with the UC128-SVS or UC130-SVS cylinders and the Kevlar reinforced hose kit KIT OB-SVS.

MODEL	P. No.	MOUNTING	DISPLACEMENT/ REVOLUTION	No. OF PISTONS	RELIEF VALVE SETTING	MAXIMUM WHEEL DIA.	WEIGHT
UP28F-SVS	1A0042662M	Front mount	28 cc - 1.7 cu.in	5	105 bar - 1500 PSI	710 mm - 28"	5 kg - 11 lbs
UP33F-SVS	1A0042661K	Front mount	33 cc - 2.0 cu.in	7	105 bar - 1500 PSI	710 mm - 28"	5 kg - 11 lbs
UP39F-SVS	1A0042660H	Front mount	39 cc - 2.4 cu.in	7	105 bar - 1500 PSI	710 mm - 28"	5 kg - 11 lbs

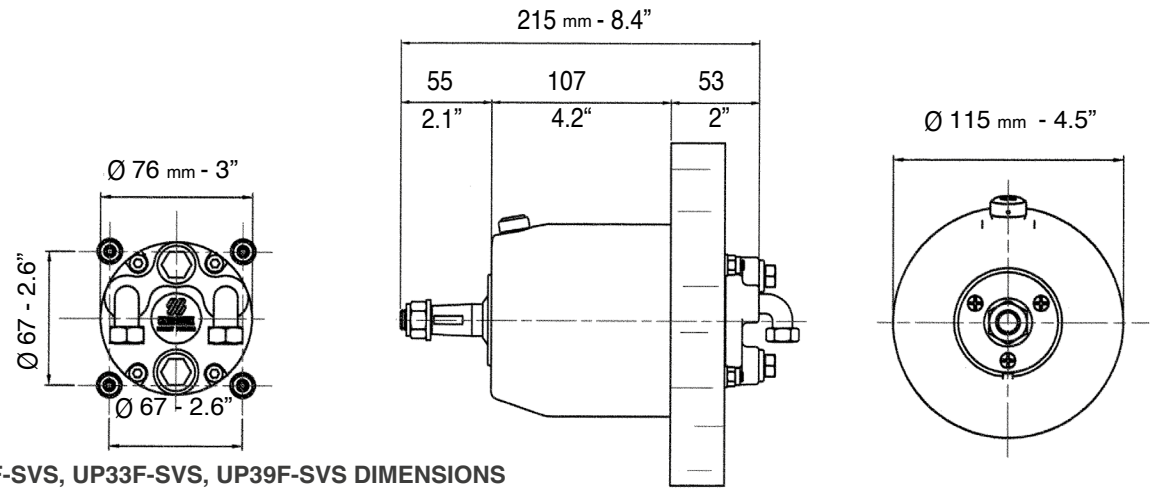

UP28F-SVS, UP33F-SVS, UP39F-SVS DIMENSIONS

SILVERSTEER™





X83-SVS



SilverSteer™ SVS helms have been specifically designed for high torque outboard applications such as bass boats, and boats with shallow dead rise and high horsepower engines.
Featuring a 1500 psi (105 Bar) pressure valve, SilverSteer™ helms will deliver very precise steering at all torque loads.
The SVS helms have to be coupled with the UC130-SVS cylinders and the Kit OB-SVS hoses, which are also specifically designed for high torque applications.
SVS Helm pumps feature stainless steel shafts and 90° adjustable nickel-plated brass fittings.

- Available in three different displacement sizes
- Compact design
- Ball bearing piston race
- Built-in lock valve for positive rudder lock (patented)
- Integral relief valve for over-pressure protection 105 bar (1500 psi)
- Stainless steel shaft
- Easily accessible lock valve and shaft seal for replacement
- Cast iron rotor for greater durability and longer life
- Complete with 90° adjustable fittings for 3/8" hose
- Tilt mechanism for SilverSteer™ systems: **X83-SVS** – 1A0044005J Tilt range of 48° and five locking positions
- **KIT F -** 1A0039664Y (optional): remote fill adapter

WARNING: The SilverSteer™ helm pumps are always to be installed in conjunction with the UC128-SVS or UC130-SVS cylinders and the Kevlar reinforced hose kit KIT OB-SVS.

MODEL	P. No.	MOUNTING	DISPLACEMENT/ REVOLUTION	No. OF PISTONS	RELIEF VALVE SETTING	MAXIMUM WHEEL DIA.	WEIGHT
UP28T-SVS	1A0044030H	With X83-SVS	28 cc - 1.7 cu.in	5	105 Bar - 1500 PSI	406 mm - 16"	5 kg - 11 lbs
UP33T-SVS	1A0044031K	With X83-SVS	33 cc - 2.0 cu.in	7	105 Bar - 1500 PSI	406 mm - 16"	5 kg - 11 lbs
UP39T-SVS	1A0044032M	With X83-SVS	39 cc - 2.4 cu.in	7	105 Bar - 1500 PSI	406 mm - 16"	5 kg - 11 lbs

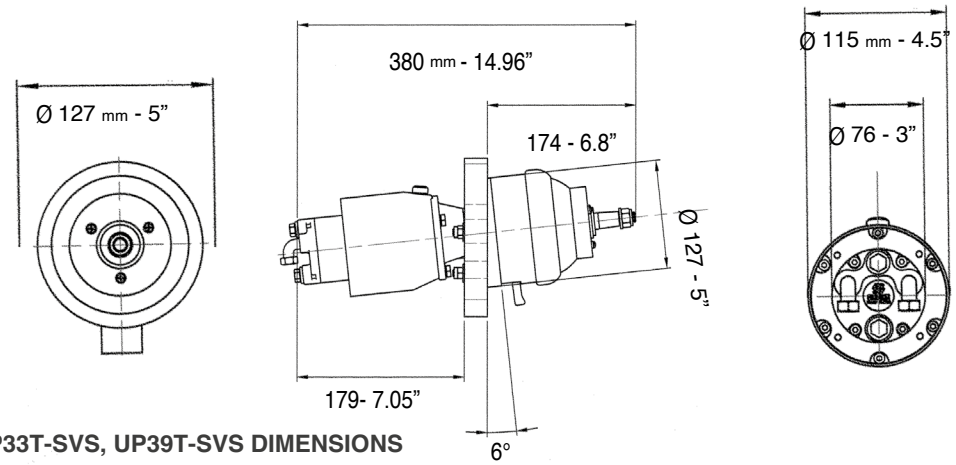

UP28T-SVS, UP33T-SVS, UP39T-SVS DIMENSIONS

UC128-SVS
High Performance front mount cylinder



UC128-SVS/1

- UC128-SVS – Balanced: the number of wheel turns lock-to-lock is equal port to starboard or vice-versa
- Adjustable boss style fittings for easy installation
- High resistance stainless steel connection bolt (ULTRABOLT)
- Replaceable cylinder end caps

Specifically designed for high performance, high torque applications, the SilverSteer™ UC128 SVS cylinder is recommended for flat boats and tournament fishing boats.

- Compatible with competing helms, hoses and oil, the UC128-SVS cylinder is built with heavy duty stainless steel cylinder rod, seals and link assemblies, is simple to install and fits almost every 2 and 4 stroke outboard engine on the market.
- Depending on the applications on the outboard engines, the UC128-SVS is available in 2 versions - see the application guide to choose the appropriate cylinder (UC128-SVS/1, UC128-SVS/2) for your application.
- UC128-SVS cylinders are recommended for use with UP28-SVS, UP33-SVS and UP39-SVS series helms and preassembled hoses (Kit OB-SVS and Kit OB/R5-SVS).
- In the **applications with dual UC128-SVS cylinder** it is necessary to order a starboard UC128-SVS cylinder (link arm attached to the starboard side of the cylinder) and a port UC128P-SVS cylinder (link arm attached to the port side of the cylinder). See tie bar section to select the required model for dual engine/dual cylinder applications. Depending on the applications on the outboard engines, the UC128P-SVS cylinder is available in 2 versions

APPLICATION: UC128-SVS front mount cylinder is not recommended for use in installations where the boat speed exceeds 69 mph (60 knots); 75 mph (65 knots) in dual engine, dual cylinder and counter rotating engines application).
Not intended for use in racing applications.

Model	Part No.	Description
UC128-SVS/1	1A00000246	Front mount cylinder, starboard version
UC128-SVS/2	1A00000247	Front mount cylinder, starboard version
UC128P-SVS/1	1A00000248	Front mount cylinder, port version
UC128P-SVS/2	1A00000249	Front mount cylinder, port version

Volume	120 cc - 7.3 cu.in.
Output force	450 kg (992 lbs)
Internal diameter	35 mm (1.37”)
Stroke	185 mm (7.28”)
Fittings for high pressure flex hose	3/8”
Bleed fittings	DN5 quick connect



UC128P-SVS/1

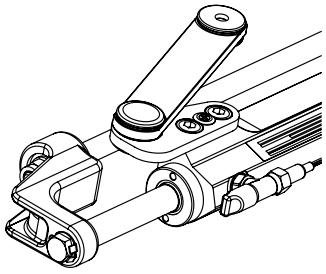

UC128-SVS/1 1A0043870A

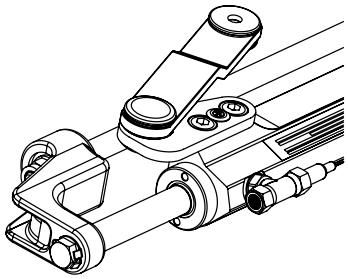

UC128-SVS/2 1A0043872E

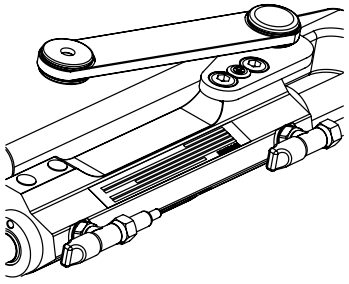

UC128P-SVS/1 1A0043828U

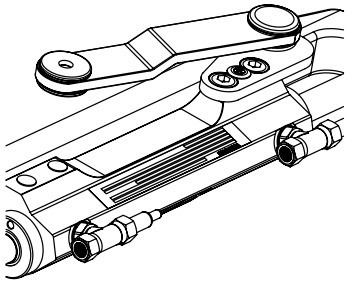

UC128P-SVS/2 1A0043873G

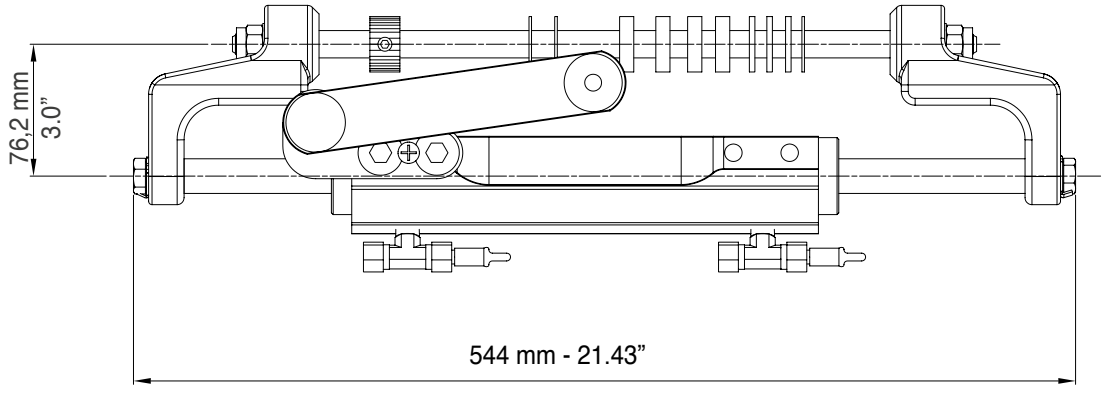

UC128-SVS, UC128P-SVS DIMENSIONS

UC128-SVS
Cylinder Applications

UC128-SVS Applications

ENGINE	MODEL	YEAR	CYLINDER	P. No.
Mercury® Mariner®	115-125-150 EFI 2S 225-250 EFI 2S 135-150-175 OPTIMAX 200-225-250 OPTIMAX RACING 300 OPTIMAX 250 SALTWATER EFI 4S 135-150-175-200 VERADO L4 FOURSTROKE 175-200 V6 FOURSTROKE 225-300 V8	1990-2007 2000-2007 1999-2018 1999-2018 1999-2011 2007-2011 2004-2012 2018-to date 2018-to date	UC128-SVS/1 UC128-SVS/1 UC128-SVS/1 UC128-SVS/1 UC128-SVS/1 UC128-SVS/1 UC128-SVS/1 UC128-SVS/1 UC128-SVS/1	1A00000246 1A00000246 1A00000246 1A00000246 1A00000246 1A00000246 1A00000246 1A00000246 1A00000246
Evinrude®	E115-E130-E135 2S V4 E150-E175-E200-E225-E250-E300 2S V6	1995-to date 1995-to date	UC128-SVS/2 UC128-SVS/2	1A00000247 1A00000247
Yamaha®	150F-200F-250G 2S 150 HPDI VMAX 2S 175-200-225-250-300 HPDI VMAX 2S F115-F150 EFI 4S F200-F225-F250 4S F115-F150-F175-F200 L4 F200-F225-F250-F300 V6 4S F350 4S V8	1990-2008 1996-2007 2000-2008 2000-2008 1999-2007 2002-2007 2004-to date 2006-to date	UC128-SVS/2 UC128-SVS/2 UC128-SVS/2 UC128-SVS/1 UC128-SVS/2 UC128-SVS/1 UC128-SVS/2 UC128-SVS/1	1A00000247 1A00000247 1A00000247 1A00000246 1A00000247 1A00000246 1A00000247 1A00000246
Honda®	BF135-BF150 4S BF150 V-TEC 4S BF175-BF200-BF225- BF250 4S	2005-to date 2008-to date 2001-to date	UC128-SVS/1 UC128-SVS/1 UC128-SVS/1	1A00000246 1A00000246 1A00000246
Suzuki®	DF100-115-140 4S DF150-175-DF200 L4 4S DF200-DF225-DF250-DF300-DF350 V6 4S	2008-to date 2006-to date 2004-to date	UC128-SVS/1 UC128-SVS/1 UC128-SVS/2	1A00000246 1A00000246 1A00000247
Tohatsu®	115-120-140 2S 70-90-115 TLDI 4S BFT 115-150-200-225-250 4S BFT60-75-90	2004-to date 2004-to date 2014-to date 2015-to date	UC128-SVS/2 UC128-SVS/1 UC128-SVS/1 UC128-SVS/1	1A00000247 1A00000246 1A00000246 1A00000246
Selva®	80 PORTOFINO/TIGERSHARK 2S 150 WHITE SHARK 2S 100EFI MARLIN -115 EFI NARWHAL 225 BEAKED WHALE 4S 150EFI KILLER WHALE 4S - 200 SEI WHALE 4S	1995-2008 2001-2007 2000-to date 2019-to date 2000-to date	UC128-SVS/1 UC128-SVS/2 UC128-SVS/1 UC128-SVS/2 UC128-SVS/1	1A00000246 1A00000247 1A00000246 1A00000247 1A00000246
Johnson®	BJ90-115-140 4S J90-115 V4 2S J150-175 V6 2S J200-225 V6 4S	2001-2007 1995-2007 1995-2007 2004-2007	UC128-SVS/1 UC128-SVS/2 UC128-SVS/2 UC128-SVS/2	1A00000246 1A00000247 1A00000247 1A00000247
OXE®	125-150-175-200HP DIESEL 300 HP DIESEL	2018-to date 2020-to date	UC128-SVS/1 UC128-SVS/1	1A00000246 1A00000246
COX®	300 HP	2020-to date	UC128-SVS/2	1A00000247
NEANDER SHARK®	DTORQUE 111	2018-to date	UC128-SVS/1	1A00000246
Parsun®	F 300	2022-to date	UC128-SVS/2	1A00000247

WARNING
These recommendations should be used as a general reference only. Final selection should be made with the assistance of a qualified installation technician. For any further information please contact our Technical Service.

SILVERSTEER™

SYSTEM	APPLICATION	WHEEL TURNS	COMPONENTS	MODEL	Q.TY
Single Engine Single Cylinder 	Up to 350 hp max	4.8 (UP25) 3.6 (UP33)	Cylinder Helm pump Hose Kit Oil Steering wheel	UC128-SVS UP25 or UP33-SVS KIT OB-SVS OIL 15 (Wheel selection)	1 1 1 2 1
For a second station add: **1 UP25-SVS or UP33-SVS helm pump, 1 KIT OB-2S fitting kit, 1 KIT OB-SVS, 1 OIL 15, 1 steering wheel**					
Dual engine Single cylinder 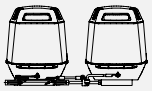	Up to 350 hp max (non-counter rotating engine) Up to 600 hp max (counter rotating engine)	4.8 (UP25) 3.6 (UP33)	Cylinder Helm pump Hose Kit Oil Tie bar Steering wheel	UC128-SVS UP25 or UP33-SVS KIT OB-SVS OIL 15 A96 (Wheel selection)	1 1 1 2 1 1
For a second station add: **1 UP25-SVS or UP33-SVS helm pump, 1 KIT OB-2S fitting kit, 1 KIT OB-SVS, 1 l OIL 15, 1 steering wheel**					
Dual engine Dual cylinder 	Up to 600 hp max (non-counter rotating engines) Up to 700 hp max (counter rotating engines)	6,1 (UP39)	Cylinder Cylinder Port Helm pump Hose Kit Oil Tie bar Steering wheel Connection Kit	UC128-SVS UC128P-SVS UP39-SVS KIT OB-SVS OIL 15 A95 (Wheel selection) KIT OB-DBR-SVS	1 1 1 1 3 1 1 1
For a second station add: **1 UP39-SVS helm pump, 1 KIT OB-2S fitting kit, 1 KIT OB-SVS, 2 T fittings 39502 V, 1 OIL 15, 1 steering wheel**					

WARNING
The UC128-SVS front mount cylinder is not recommended for use in installations where the boat speed exceeds **69 mph (60 knots)**; (75 mph (65 knots) in dual engine, dual cylinder and counter rotating engines application).
Not intended for use in racing applications.

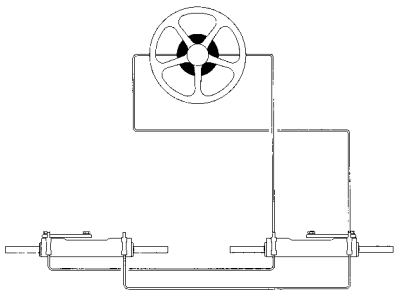

Dual engine dual cylinder application diagram

ATTENTION:
The SilverSteer™ helm pumps are always to be installed in conjunction with the UC128-SVS or UC130-SVS cylinders and the Kevlar reinforced hose kit KIT OB-SVS.

NOTE: Three outboard engine applications are available with UC128-SVS cylinder.
For triple outboard engine, dual cylinder applications, please refer to tie-bar section.
For any further and detailed information, please contact our Technical Service.

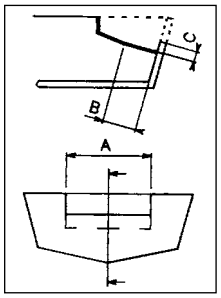

SPLASHWELL DIMENSION REQUIREMENTS			
Engine No.	A	B	C
1	560 mm - 22.05”	152 mm - 5.98”	152 mm - 5.98”
2	1110 mm - 43.70”	152 mm - 5.98”	152 mm - 5.98”

For twin engine applications minimum engine center distance is 550 mm (21.6”)

UC130-SVS
High Performance front mount cylinder



UC130-SVS

UC130-SVS – Balanced: the number of wheel turns lock-to-lock is equal port to starboard or vice-versa
- Side fittings for easy installation
- High resistance stainless steel connection bolt (ULTRABOLT)
- Replaceable cylinder end caps
- SilverSteer™ UC130-SVS cylinder is recommended for high horsepower applications, bass boats and tournament fishing boats.
- This cylinder is built with heavy duty stainless steel cylinder rod, seals and link assemblies, is simple to install and fits almost every 2 and 4 stroke outboard engine in the market. See the application guide to choose the appropriate cylinder (UC130-SVS/1 or UC130- SVS/2) for your application.

APPLICATION: UC130-SVS front mount cylinder is not recommended for use in installations where the boat speed exceeds 69 mph (60 knots); (75 mph (65 knots) in dual engine, dual cylinder and counter rotating engines application).
Not intended for use in racing applications.

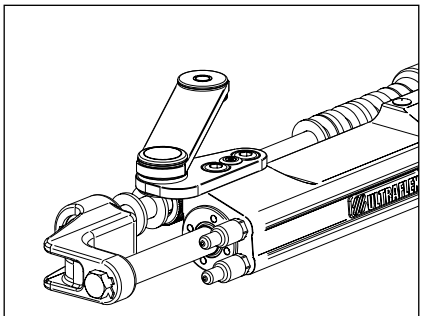

UC130-SVS/1 - 1A0043225U

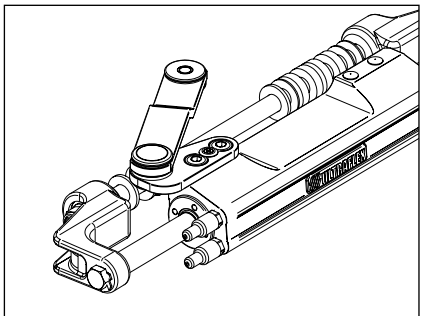

UC130-SVS/2 - 1A0043226W

Model	Part No.	Description
UC130-SVS/1	1A0043225U	Front mount cylinder, starboard version
UC130-SVS/2	1A0043226W	Front mount cylinder, starboard version
UC130P-SVS/1	1A0043223P	Front mount cylinder, port version
UC130P-SVS/2	1A0043224S	Front mount cylinder, port version

Volume	130 cc - 7.3 cu. in.
Output force	740 kg (1631 lbs)
Internal diameter	36 mm (1.42”)
Stroke	185 mm (7.28”)
Fittings for high pressure flex hose	3/8” (9,5 mm)
Bleed fittings	DN5 quick connect



UC130P-SVS

In the **applications with dual UC130-SVS cylinder** it is necessary to order a UC130-SVS cylinder (link arm attached to the starboard side of the cylinder) and a port UC130P-SVS cylinder (link arm attached to the port side of the cylinder). A95 tie bar is required for use on dual engine/dual cylinder applications.

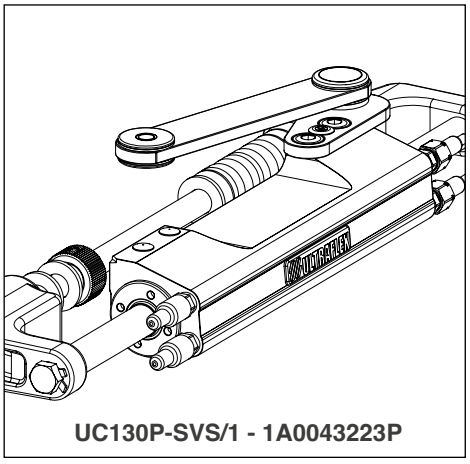

UC130P-SVS/1 - 1A0043223P

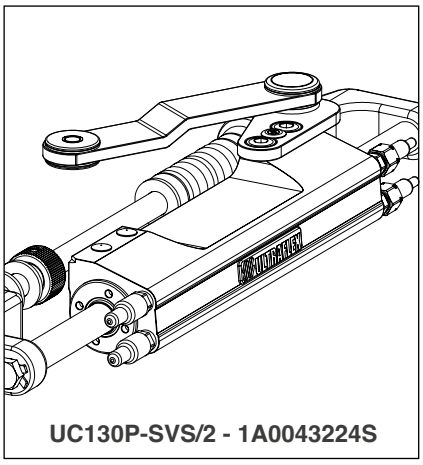

UC130P-SVS/2 - 1A0043224S

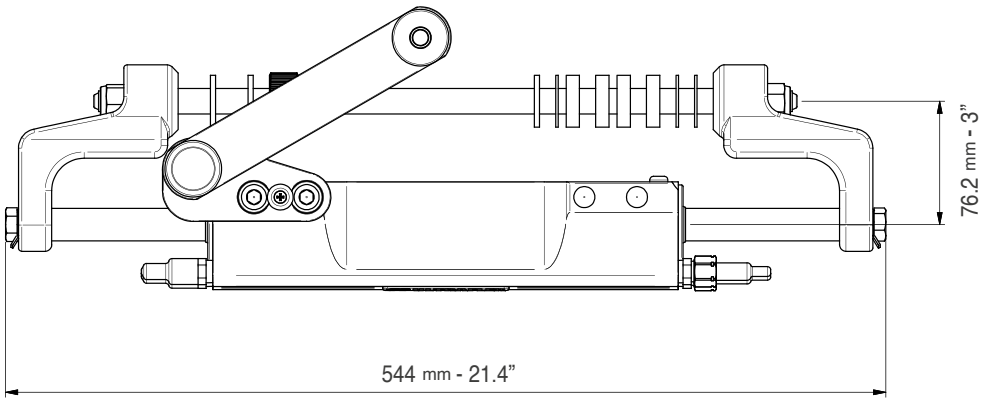

UC130-SVS, UC130P-SVS DIMENSIONS

UC130-SVS cylinder
Applications

ENGINE	MODEL	YEAR	CYLINDER	P. No.
Mercury® Mariner®	115-125-150 EFI 2S 225-250 EFI 2S 135-150-175 OPTIMAX 200-225-250 OPTIMAX RACING 300 OPTIMAX 250 SALTWATER EFI 4S 135-150-175-200 VERADO L4 FOURSTROKE 175-200 V6 FOURSTROKE 225-300 V8	1990-2007 2000-2007 1999-2018 1999-2018 1999-2011 2007-2011 2004-2012 2018-to date 2018-to date	UC130-SVS/1 UC130-SVS/1 UC130-SVS/1 UC130-SVS/1 UC130-SVS/1 UC130-SVS/1 UC130-SVS/1 UC130-SVS/1 UC130-SVS/1	1A0043225U 1A0043225U 1A0043225U 1A0043225U 1A0043225U 1A0043225U 1A0043225U 1A0043225U 1A0043225U
Evinrude®	E115-E130-E135 2S V4 E150-E175-E200-E225-E250-E300 2S V6	1995-to date 1995-to date	UC130-SVS/2 UC130-SVS/2	1A0043226W 1A0043226W
Yamaha®	150F-200F-250G 2S 150 HPDI VMAX 2S 175-200-225-250-300 HPDI VMAX 2S F115-F150 EFI 4S F200-F225-F250 4S F115-F130-F150-F175-F200 L4 F200-F225-F250-F300 V6 4S F350 4S V8	1990-2008 1996-2007 2000-2008 2000-2008 1999-2007 2002-to date 2004-to date 2006-to date	UC130-SVS/2 UC130-SVS/2 UC130-SVS/2 UC130-SVS/1 UC130-SVS/2 UC130-SVS/1 UC130-SVS/2 UC130-SVS/1	1A0043226W 1A0043226W 1A0043226W 1A0043225U 1A0043226W 1A0043225U 1A0043226W 1A0043225U
Honda®	BF135-BF150 4S BF150 V-TEC 4S BF175-BF200-BF225- BF250 4S BF175-BF250 V6 BF300-350 V8	2005-to date 2008-to date 2001-to date	UC130-SVS/1 UC130-SVS/1 UC130-SVS/1 UC130-SVS/1 UC130-SVS/1	1A0043225U 1A0043225U 1A0043225U 1A0043225U 1A0043225U
Suzuki®	DF100-115-140 4S DF150-175-DF200 L4 4S DF200-DF225-DF250-DF300-DF350 V6 4S	2008-to date 2006-to date 2004-to date	UC130-SVS/1 UC130-SVS/1 UC130-SVS/2	1A0043225U 1A0043225U 1A0043226W
Tohatsu®	115-120-140 2S 70-90-115 TLDI 4S MFS 90-115-140 4S BFT 115-150 4S BFT 60-75-90 4S BFT 200-225-250 V6	2004-to date 2004-to date 2018-to date 2014-to date 2015-to date	UC130-SVS/2 UC130-SVS/1 UC130-SVS/1 UC130-SVS/1 UC130-SVS/1 UC130-SVS/1	1A0043226W 1A0043225U 1A0043225U 1A0043225U 1A0043225U 1A0043225U
Selva®	80 PORTOFINO/TIGERSHARK 2S 150 WHITE SHARK 2S 100 EFI MARLIN -115 EFI NARWHAL 225 BEAKED WHALE 4S 150 EFI KILLER WHALE 4S - 200 SEI WHALE 4S	1995-2008 2001-2007 2000-to date 2019-to date 2000-to date	UC130-SVS/1 UC130-SVS/2 UC130-SVS/1 UC130-SVS/2 UC130-SVS/1	1A0043225U 1A0043226W 1A0043225U 1A0043226W 1A0043225U
Johnson®	BJ90-115-140 4S J90-115 V4 2S J150-175 V6 2S J200-225 V6 4S	2001-2007 1995-2007 1995-2007 2004-2007	UC130-SVS/1 UC130-SVS/2 UC130-SVS/2 UC130-SVS/2	1A0043225U 1A0043226W 1A0043226W 1A0043226W
OXE®	125-150-175-200HP DIESEL 300 HP DIESEL	2018-to date 2020-to date	UC130-SVS/1 UC130-SVS/1	1A0043225U 1A0043225U
COX®	300-350 HP	2020-to date	UC130-SVS/2	1A0043226W
NEANDER SHARK®	DTORQUE 111	2018-to date	UC130-SVS/1	1A0043225U
Parsun®	F 300	2022-to date	UC130-SVS/2	1A0043226W

WARNING
These recommendations should be used as a general reference only.
Final selection should be made with the assistance of a qualified installation technician.
For any further information please contact our Technical Service.

NOTE: Suzuki® engines built from 1998 to 2008 installing UC130-SVS/1 cylinder require the kit **KIT SU** - 1A0041954W ordered separately.

Suzuki® engines
DF100-115-140 4S in with a twin engine configuration require UC128-OBF/2 - 1A0043232R, UC128P-OBF/2 - 1A0043235X cylinders and
A90 - 1A0040138H tie bar

SILVERSTEER™

SYSTEM	APPLICATION	WHEEL TURNS	COMPONENTS	MODEL	Q.TY
Single Engine Single Cylinder 	Up to 350 hp max	4,6 (UP28) 3,9 (UP33)	Cylinder Helm pump Hose Kit Oil Steering wheel	UC130-SVS UP28 or UP33-SVS KIT OB-SVS OL 150 (Wheel selection)	1 1 1 2 1
For a second station add: **1 UP28-SVS or UP33-SVS helm pump, 1 KIT OB-2S fitting kit, 1 KIT OB-SVS, 1 OL 150, 1 steering wheel**					
Dual engine Single cylinder 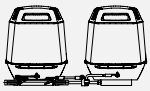	Up to 350 hp max (non-counter rotating engine) Up to 600 hp max (counter rotating engine)	4,6 (UP28) 3,9 (UP33)	Cylinder Helm pump Hose Kit Oil Tie bar Steering wheel	UC130-SVS UP28 or UP33-SVS KIT OB-SVS OL 150 A96 (Wheel selection)	1 1 1 2 1 1
For a second station add: **1 UP28-SVS or UP33-SVS helm pump, 1 KIT OB-2S fitting kit, 1 KIT OB-SVS, 1 l OL 150, 1 steering wheel**					
Dual engine Dual cylinder 	Up to 600 hp max (non-counter rotating engines) Up to 700 hp max (counter rotating engines)	6,6 (UP39)	Cylinder Cylinder Port Helm pump Hose Kit Oil Tie bar Steering wheel Connection Kit	UC130-SVS UC130P-SVS UP39-SVS KIT OB-SVS OL 150 A95 (Wheel selection) KIT OB-2C130-SVS	1 1 1 1 3 1 1 1
For a second station add: **1 UP39-SVS helm pump, 1 KIT OB-2S fitting kit, 1 KIT OB-SVS, 2 T fittings 39502 V, 1 OL 150, 1 steering wheel**					

WARNING
The UC130-SVS front mount cylinder is not recommended for use in installations where the boat speed exceeds **69 mph (60 knots)**; (75 mph (65 knots) in dual engine, dual cylinder and counter rotating engines application).
Not intended for use in racing applications.

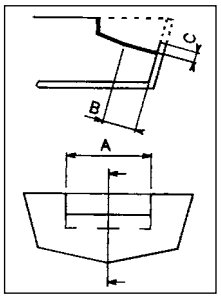

SPLASHWELL DIMENSION REQUIREMENTS			
Engine No.	**A**	**B**	**C**
1	560 mm - 22.05”	152 mm - 5.98”	152 mm - 5.98”
2	1110 mm - 43.70”	152 mm - 5.98”	152 mm - 5.98”

For twin engine applications minimum engine center distance is 650 mm (26”)

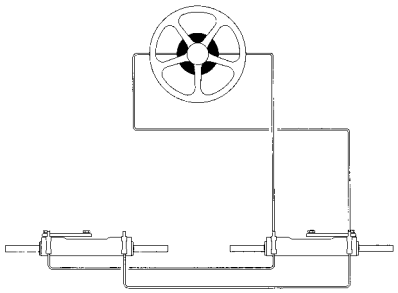
Dual engine dual cylinder application diagram

WARNING:
The SilverSteer™ helm pumps are always to be installed in conjunction with the UC128-SVS or UC130-SVS cylinder and the Kevlar reinforced hose kit KIT OB-SVS.

NOTE: Three outboard engine applications are available with UC128-SVS or UC130-SVS cylinder.
For triple outboard engine, dual cylinder applications, please refer to tie-bar section.
For any further and detailed information, please contact our Technical Service.

Hose kits
for Silversteer™ systems

SILVERSTEER™

KIT OB-SVS - Hose kit for single station installation for SILVERSTEER™ systems

CE UK CA



KIT OB-SVS

Two high pressure Kevlar stranded flexible hoses with pre-crimped fittings and bend restrictors on both ends. Recommended for use with all Ultraflex SilverSteer™ and MasterDrive™ helms with 1500 psi relief valves.
Lenghts available: from 3m (9.8') to 9m (29.5') with 0,5m (1.6') increments.

KIT OB-SVS	LENGTH	P. No.
KIT OB-SVS-30	3,00 m - 9.8 ft	1A0043587F
KIT OB-SVS-35	3,50 m - 11.5 ft	1A0043588H
KIT OB-SVS-40	4,00 m - 13.2 ft	1A0043589K
KIT OB-SVS-45	4,50 m - 14.8 ft	1A0043590U
KIT OB-SVS-50	5,00 m - 16.4 ft	1A0043591W
KIT OB-SVS-55	5,50 m - 18.0 ft	1A0043592Y
KIT OB-SVS-60	6,00 m - 19.7 ft	1A0043593A
KIT OB-SVS-65	6,50 m - 21.3 ft	1A0043594C
KIT OB-SVS-70	7,00 m - 22.9 ft	1A0043595E
KIT OB-SVS-75	7,50 m - 24.6 ft	1A0043596G
KIT OB-SVS-80	8,00 m - 26.3 ft	1A0043597J
KIT OB-SVS-85	8,50 m - 27.8 ft	1A0043598L
KIT OB-SVS-90	9,00 m - 29.5 ft	1A0043599N

KIT OB/R5-SVS - Hose kit for single station installation for SILVERSTEER™ systems

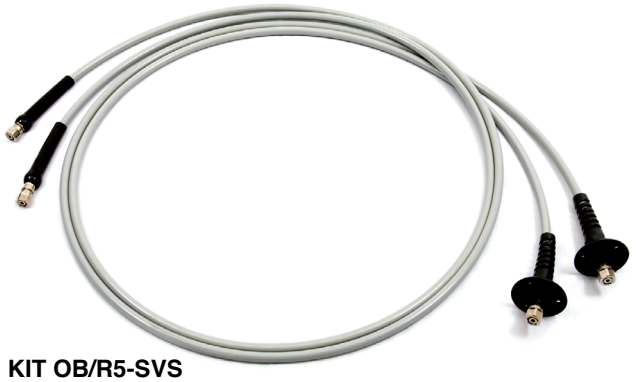

KIT OB/R5-SVS

Two high pressure Kevlar stranded flexible hoses with pre-crimped fittings, R5 bulkhead fittings and bend restrictors on both ends. Recommended for use with all Ultraflex SilverSteer™ and MasterDrive™ helms with 1500 psi relief valves.
Lenghts available: from 3m (9.8') to 9m (29.5') with 0,5m (1.6') increments.

KIT OB/R5-SVS	LENGTH	P. No.
KIT OB/R5-SVS-30	3,00 m - 9.8 ft	1A0043600U
KIT OB/R5-SVS-35	3,50 m - 11.5 ft	1A0043601W
KIT OB/R5-SVS-40	4,00 m - 13.2 ft	1A0043602Y
KIT OB/R5-SVS-45	4,50 m - 14.8 ft	1A0043603A
KIT OB/R5-SVS-50	5,00 m - 16.4 ft	1A0043604C
KIT OB/R5-SVS-55	5,50 m - 18.0 ft	1A0043605E
KIT OB/R5-SVS-60	6,00 m - 19.7 ft	1A0043606G
KIT OB/R5-SVS-65	6,50 m - 21.3 ft	1A0043607J
KIT OB/R5-SVS-70	7,00 m - 22.9 ft	1A0043608L
KIT OB/R5-SVS-75	7,50 m - 24.6 ft	1A0043609N
KIT OB/R5-SVS-80	8,00 m - 26.3 ft	1A0043610X
KIT OB/R5-SVS-85	8,50 m - 27.8 ft	1A0043611Z
KIT OB/R5-SVS-90	9,00 m - 29.5 ft	1A0043612B

WARNING: The SilverSteer™ helm pumps are always to be installed in conjunction with the UC128-SVS or UC130-SVS cylinder and the Kevlar reinforced hose kit KIT OB-SVS.

SILVERSTEER™

KIT OB-2C-SVS - Dual cylinder / dual engine engine connection kit for UC128-SVS or UC130-SVS

CE UK CA



KIT OB-2C130-SVS

Two high pressure Kevlar stranded flexible hoses with pre-crimped fittings.
Recommended for use with UC128-SVS or UC130-SVS only.

Dual Engine Installation Kit:

KIT OB-2C130-SVS	ENGINE CENTERS	HOSE LENGTH	PART No.
KIT OB-2C130-SVS-38	660 mm (26”)	381 mm (15”)	1A0043615H
KIT OB-2C130-SVS-41	686 mm (27”)	407 mm (16”)	1A0043616K
KIT OB-2C130-SVS-43	711 mm (28”)	432 mm (17”)	1A0043617M
KIT OB-2C130-SVS-45	724 mm (28.5”)	445 mm (17.5”)	1A0043618P
KIT OB-2C130-SVS-46	737 mm (29”)	457 mm (18”)	1A0043619S
KIT OB-2C130-SVS-48	762 mm (30”)	483 mm (19”)	1A0043620A
KIT OB-2C130-SVS-50	777 mm (30.5”)	496 mm (19.5”)	1A0043621C
KIT OB-2C130-SVS-51	788 mm (31”)	508 mm (20”)	1A0043622E
KIT OB-2C130-SVS-53	813 mm (32”)	534 mm (21”)	1A0043623G

Triple Engine Installation Kit:

KIT OB-2C130-SVS	ENGINE CENTERS	HOSE LENGTH	PART No.
KIT OB-2C130-SVS-110	660 mm (26”)	1041 mm (41”)	1A0043738A
KIT OB-2C130-SVS-120	711 mm (28”)	1143 mm (45”)	1A0043742R
KIT OB-2C130-SVS-130	762 mm (30”)	1245 mm (49”)	1A0043788S
KIT OB-2C130-SVS-140	813 mm (32”)	1347 mm (53”)	1A0043752U

NOTE: For **UC128-SVS** applications and f**our-engine/double cylinder** installations, please contact our Technical Service.

A88 - A92
Tie bars for twin outboard engine

A88

Tie bars suitable for all outboard applications with single or dual cylinder **up to 300 hp of maximum power**.
Electropolished stainless steel ball joint.

- All stainless steel components
- Applicable to twin outboard engines using mechanical steering also
- Adjustable from 650 mm (25.6”) to 950 mm (37.4”) engine centers

WARNING: On those applications where the clearance between engine tiller arms and cowling is not sufficient for the use of the A88, the **A92** tie bar is recommended

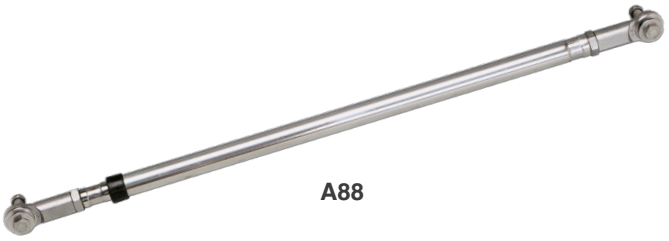

A88

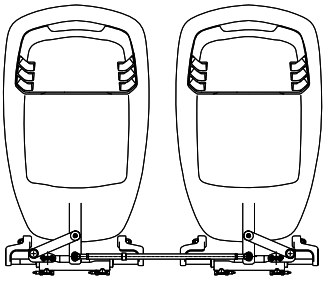

A88 application example

A88	1A0040128E	Tie bar - adjustable from 650 mm (25.6”) to 950 mm (37.4”) engine centers

A92

- Easily adjustable before or after installation
- All stainless steel components
- Applicable to twin outboard engines using mechanical steering also
- **A92/700**: Adjustable from 550 mm (21.6”) to 700 mm (27.5”) engine centers
- **A92/950**: Adjustable from 700 mm (27.5”) to 950 mm (37.4”) engine centers



A92

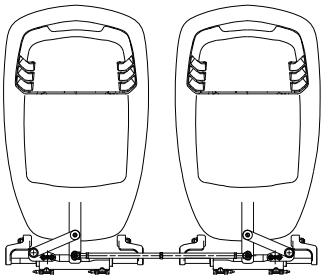

A92 application example

A92/700	1A0040892V	Tie bar - adjustable from 550 mm (21.6”) to 700 mm (27.5”) engine centers
A92/950	1A0040893X	Tie bar - adjustable from 700 mm (27.5”) to 950 mm (37.4”) engine centers

WARNING: As the tiller arm position varies from engine to engine and the distance between two engines is not predictable, unexpected interferences may occur while tilting. A duly check of the tie bar installation is then strongly recommended. Should you need additional information, please do not hesitate to refer to our Technical Service.

A96 - Tie bars for twin outboard engine/single UC128-OBF or UC128-SVS or UC130-SVS cylinder

- Suitable for applications with single UC128-OBF or UC128-SVS or UC130-SVS front mount cylinder
- Allows to tilt the engines independently
- Stainless steel components
- Electropolished stainless steel ball joints
- Also available in semi-assembled bars and brackets

- 2 available different lengths:
From 26” to 29” engine center
From 29” to 34.5” engine center



A96 M/Y-29

A96 S/H-29

A96 M/Y-29	1A0043496C	From 26” to 29” engine center - Mercury®, Yamaha® and Selva® engines
A96 M/Y-34.5	1A0043497E	From 29” to 34.5” engine center - Mercury®, Yamaha® and Selva® engines
A96 S/H-29	1A0043897X	From 26” to 29” engine center - Suzuki®, Honda® and Tohatsu®
A96 S/H-34.5	1A0043898Z	From 29” to 34.5” engine center - Suzuki®, Honda® and Tohatsu® engines

WARNING: As the tiller arm position varies from engine to engine and the distance between two engines is not predictable, unexpected interferences may occur while tilting. A duly check of the tie bar installation is then strongly recommended. Should you need additional information, please do not hesitate to refer to our Technical Service.



UC128 + A96

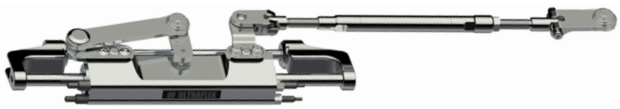

UC130 + A96

A96 TIE BAR APPLICATIONS

WARNING
These recommendations should be used as a general reference only. For any further information please contact our Technical Service.

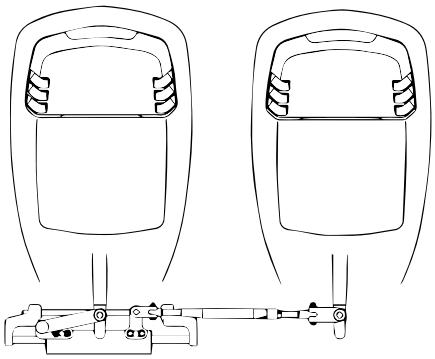

A96 application example

A95 - Tie bars for twin outboard engine/dual UC128-OBF or UC128-SVS or UC130-SVS cylinder



A95 M/Y



A95 S/H

- Suitable for applications with dual UC128-OBF or UC128-SVS or UC130-SVS front mount cylinder with the exception of the dual UC128-OBF cylinder with Suzuki DF100-115-140 4S engines. For these applications **A90** - 1A0040138H tie bar is used.
- Allows to tilt the engines independently
- All stainless steel components
- Electropolished stainless steel ball joints
- Also available in semi-assembled bars and brackets

- 2 available different lengths:
From 26” to 32” engine center
From 32” to 37.5” engine center

A95 M/Y-32	1A0043409E	From 26” to 32” engine center - Mercury®, Yamaha® and Selva® engines
A95 M/Y-37.5	1A0043410N	From 32” to 37.5” engine center - Mercury®, Yamaha® and Selva® engines
A95 S/H-32	1A0043901J	From 26” to 32” engine center - Suzuki®, Honda® and Tohatsu® engines
A95 S/H-37.5	1A0043902L	From 32” to 37.5” engine center - Suzuki®, Honda® e Tohatsu® engines

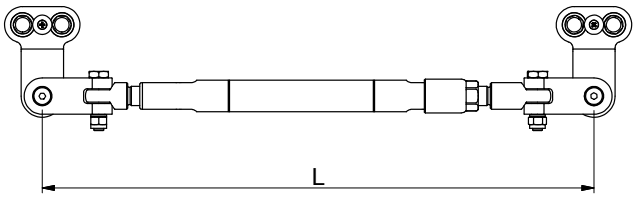

ENGINE CENTER DISTANCE:
660 mm (26”) L= 455 mm (18”)
813 mm (32”) L= 608 mm (24”)
952 mm (37.5”) L= 747 mm (29.5”)

A95 - Tie bars for twin outboard engine/dual UC128-OBF or UC128-SVS or UC130-SVS cylinder



UC128 + A95

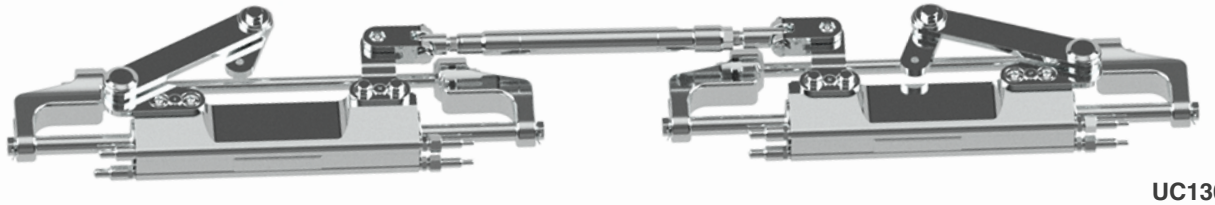

UC130 + A95

WARNING: In the applications with dual cylinder it is necessary to order a UC128-OBF or UC128-SVS or UC130-SVS cylinder (link arm attached to the starboard side of the cylinder) and a UC128P-OBF or UC128P-SVS or UC130P-SVS port cylinder (link arm attached to the port side of the cylinder).

UC128-OBF starboard cylinders:
UC128-OBF/1 - 1A0043231N
UC128-OBF/2 - 1A0043232R
UC128-OBF/3 - 1A0043233T

UC128P-OBF port cylinders:
UC128P-OBF/1 - 1A0043234V
UC128P-OBF/2 - 1A0043235X

UC128-SVS starboard cylinders:
UC128-SVS/1 - 1A0043870A
UC128-SVS/2 - 1A0043872E

UC128P-SVS port cylinders:
UC128P-SVS/1 - 1A0041328U
UC128P-SVS/2 - 1A0043878G

UC130 starboard cylinders:
UC130-SVS/1 - 1A0043225U
UC130-SVS/2 - 1A0043226W

UC130P port cylinders:
UC130P-SVS/1 - 1A0043223P
UC130P-SVS/2 - 1A0043224S

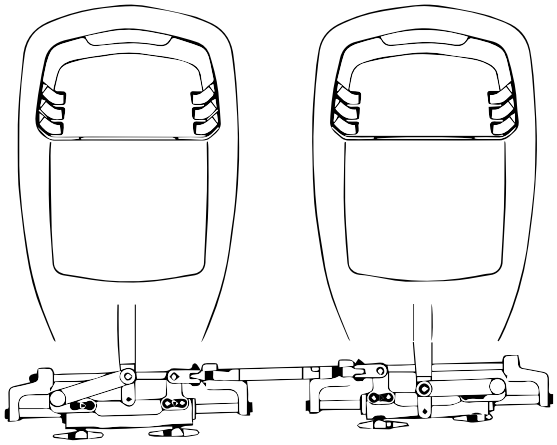

A95 - application example

WARNING: As the tiller arm position varies from engine to engine and the distance between two engines is not predictable, unexpected interferences may occur while tilting.
Checking the cowling clearances with the tie bar at various engine tilt positions and turning angles is required.
Should you need additional information, please do not hesitate to refer to our Technical Service.

A90 - Tie bar
for twin outboard engine Suzuki® DF100-115-140 4S twin UC128-OBF cylinder

A90 - 1A0040138H

- Suitable for applications with dual UC128-OBF front mount cylinder
- All stainless steel components
- Electropolished stainless steel ball joints
- Allows to tilt the engines independently
- Applicable to engine centers variable from 660 mm (26”) to 950 mm (37.4”).

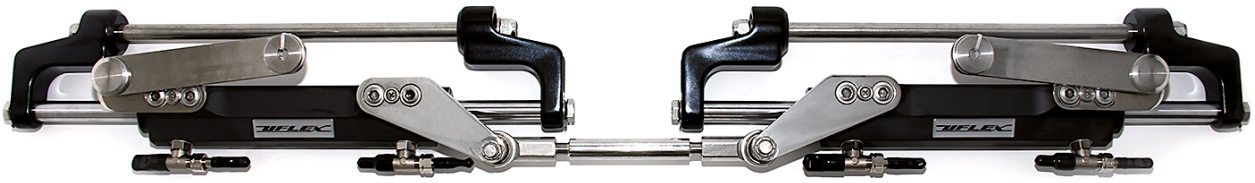

UC128 + A90

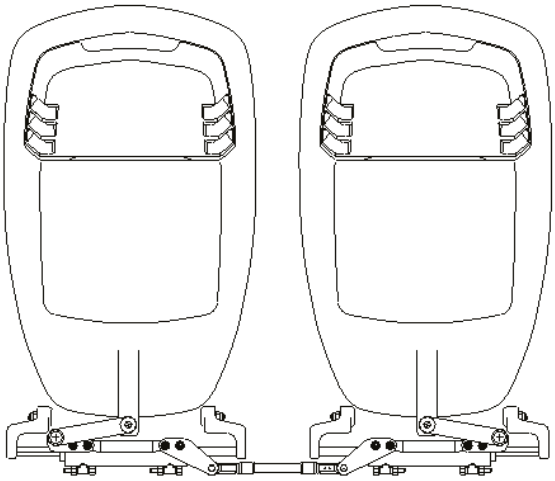

A90 - application example



A90

AS-GEN3 - Tie bar for Suzuki AMD engines





Suitable for use in applications with Suzuki AMD engines with integrated cylinder and MASTERDRIVE and INTEGRA systems, starting from twin-engine configurations.

AS-GEN3-2	1A0043918C	Tie bar for Suzuki AMD engines twin-engine installation
AS-GEN3-3	1A0044113M	Tie bar for Suzuki AMD engines triple-engine installation

A97 - Tie bars for triple outboard engine/dual UC128OBF or UC128-SVS or UC130-SVS cylinder



A97 M/Y-30



A97 S/H-30



UC130 + A97

Suitable for applications with triple outboard engine and dual cylinder UC128-OBF or UC128-SVS or UC130-SVS
• Also available in semi-assembled bars and brackets

• 2 available different lengths:
From 26” to 30” engine center
From 30” to 35.5” engine center

A97 M/Y-30	1A0043513Z	From 26” to 30” engine center Mercury®, Yamaha® and Selva® engines Mercury® bracket included
A97 M/Y-35.5	1A0043514B	From 30” to 35.5” engine center Mercury®, Yamaha® and Selva® engines Mercury® bracket included
A97 S/H-30	1A0043905T	From 26” to 30” cengine center Suzuki®, Honda® e Tohatsu® engines
A97 S/H-35.5	1A0043906V	From 30” to 35.5” engine center Suzuki®, Honda® e Tohatsu® engines

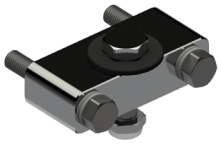

MERCURY® BRACKET KIT - 1A0043911M

Heavy duty triple engine/twin cylinder tie bar kit for use with UC128-OBF or UC128-SVS or UC130-SVS and UC128P-OBF or UC128P-SVS or UC130P-SVS “Port” version outboard cylinders. These AISI 304 electropolished stainless steel tie bars are easy to install and allow for independent engines trimming with minimal effect on alignment.

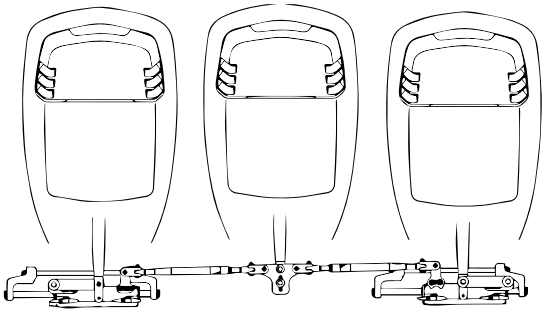

A97 - application example

A98 - Tie bars for quad outboard engine/dual UC128OBF or UC128-SVS or UC130-SVS cylinder



A98 M/Y



A98 S/H



UC128 + A98

- Suitable for applications with quad outboard engine and dual cylinder UC128-OBF or UC128-SVS or UC130-SVS
- Also available in semi-assembled bars and brackets
- From 26” to 32” center engines distance

A98 M/Y	1A0043542G	From 26” to 32” engine center - Mercury®, Yamaha® and Selva® engines - Mercury® bracket included
A98 S/H	1A0043909B	From 26” to 32” engine center - Suzuki®, Honda® e Tohatsu® engines

Heavy duty quad engine/twin cylinder tie bar kit for use with UC128-OBF or UC128-SVS or UC130-SVS and UC128P-OBF or UC128P-SVS or UC130P-SVS “Port” version outboard cylinders. These AISI 304 electropolished stainless steel tie bars are easy to install and allow for independent engines trimming with minimal effect on alignment.

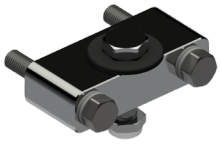

MERCURY® BRACKET KIT - 1A0043911M

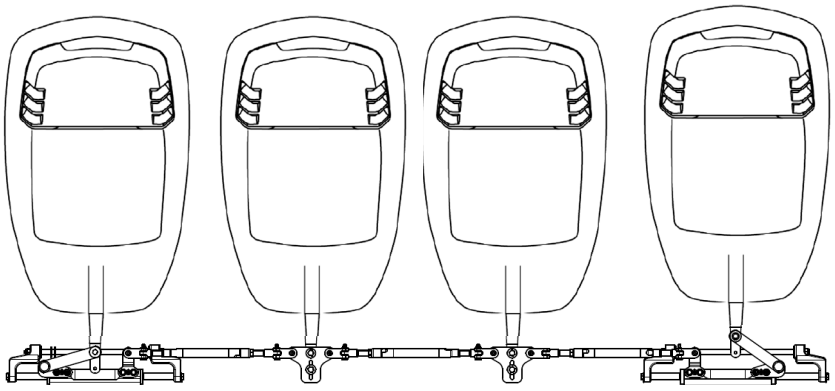

A98 - application example

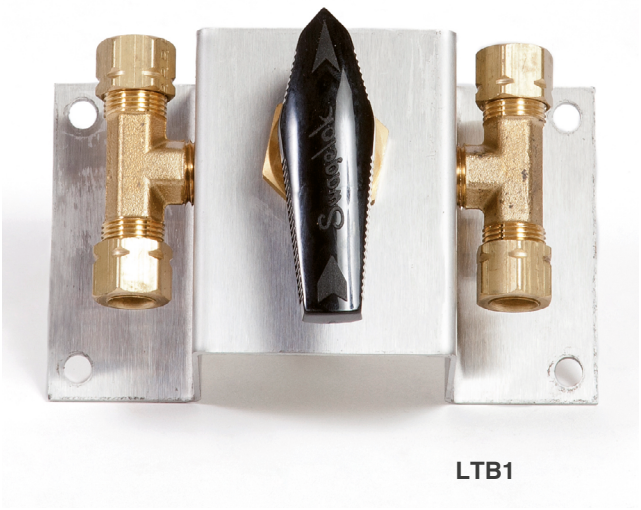

LTB1



LTB1N

LTB1 - 1A0042085Z
LTB1N - 1A0043525G

Liquid Tie Bars for twin engine / twin cylinder applications where a mechanical tie bar is not feasible. Engine centers must be at least 38” wide as engine can periodically misalign.
They connect using standard Kit OB or Kit OB/R5.SVS hoses.
The Liquid Tie Bars should not be used on any applications with engine centers less than 36”

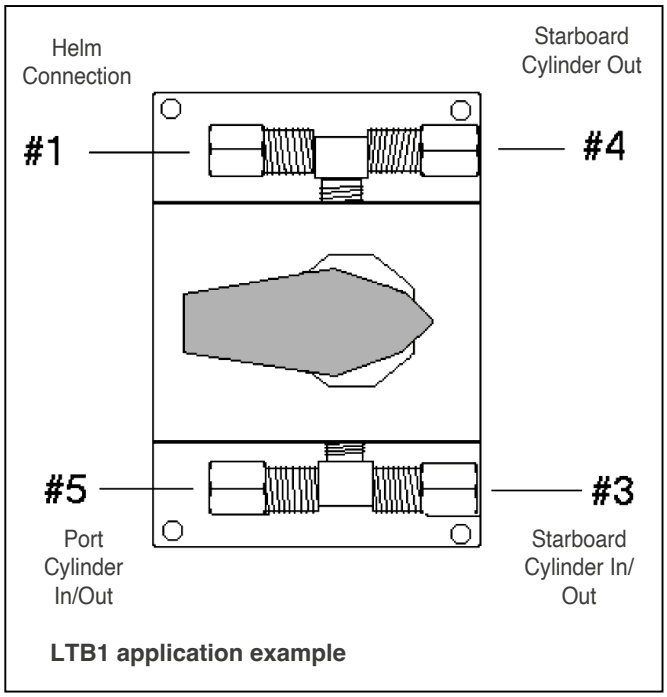

LTB1 application example

MasterDrive™
Power Assisted Outboard Steering System



MasterDrive power assisted outboard steering system delivers effortless steering for the most demanding applications, regardless of speed or torque conditions.

MasterDrive System features

- Eliminates torque at the steering wheel
- Three different selectable levels of power give the driver the desired feeling on the wheel (PATENTED).
- Automatically reverts to manual mode in case of power loss.
- High efficiency, low Amp draw, low noise
- The system always running permits immediate control in any sea conditions
- Equipped with safety switch ON/OFF (SMART BUTTON)
- Suitable for dual station installations and for use with autopilot
- Voltage: 12VDC
- CE marked in conformity with ABYC P21, ISO 10592 safety standards, Ignition protected (SAE J-1171 and UNI EN 28846)

SYSTEM APPLICATIONS	MasterDrive
Max relief valve for the hydraulic steering system	105 bar
Control unit operation pressure	35 bar
Speed allowed	60 knots - 65 knots for two engines, dual cylinder, counter rotating propeller applications



Components

- 1 single packaged **KIT MD** for single station containing:
  – 1 **UH** Front or tilt mount Main Helm
  – 1 **UPMD** Power Unit, 15’ (4,5 m) wiring harness included
  – 1 **UCMD** User Interface
  – 4 **OL 150** bottles of hydraulic oil
  – Anti-vibration sleeves
- 1 **KIT MD2** for dual station
- 1 **UC128-SVS o UC130-SVS Silversteer™** Steering Cylinder (1 UC128-SVS + 1 UC128P-SVS o1 UC130-SVS starboard+1 UC130/P-SVS port on dual cylinder applications)
- 1 **KIT-OB:** high pressure hose kit, helm-power unit connection, complete with preassembled fittings.
- 1 **KIT OB-SVS: SilverSteer™** high pressure hose kit, helm-cylinder connection, complete with preassembled fittings.
- 1 **KIT OB-2C130-SVS: SilverSteer™** high pressure hose kit complete with preassembled fittings for cylinder connection (dual cylinder applications only).
- 1 Tilt mechanism **X88** – 1A0044006L suitable for Tilt Mount Helm. Tilt range of 48° and five locking positions.
- 1 Dual cylinder application Tie Bar: see tie bar section
- 1 Steering wheel: see steering wheel section
- 1 Instruction Manual

MasterDrive™
Power Assisted Outboard Steering System

UH - Main Helms

- Available in two different displacement sizes: 32 cc (1.95 cu.in) and 40 cc (2.44 cu.in)
- Front Mount and Tilt Mount versions
- Dual station installation version also available (please refer to MD2 Kit)
- Built-in relief valve
- 3/4" tapered shaft
- Corrosion resistant painted body
- Waterproof
- Suitable for use with autopilots
- Voltage: 12VDC
- CE marked in accordance with ABYC P21, ISO 10592 standards
- Tilt-mounted version is prepared for **X88** - 1A0044006L tilt rail mechanism



UH

MODEL	P. No.	MOUNTING	DISPLACEMENT/ REVOLUTION	APPLICATION	No. OF STATIONS	MAXIMUM WHEEL DIA.
UH32-F	1A0042091U	front mount	32cc - 1.95 cu.in	single cylinder	1	406 mm - 16"
UH32-T	1A0042092W	with X88 tilt	32cc - 1.95 cu.in	single cylinder	1	406 mm - 16"
UH40-F	1A0042093Y	front mount	40cc - 2.44 cu.in	dual cylinder	1	406 mm - 16"
UH40-T	1A0042095C	with X88 tilt	40cc - 2.44 cu.in	dual cylinder	1	406 mm - 16"

UH32: wheel turns lock-to-lock in single cylinder applications: **3,75**
UH40: wheel turns lock-to-lock in dual cylinder applications: **6**

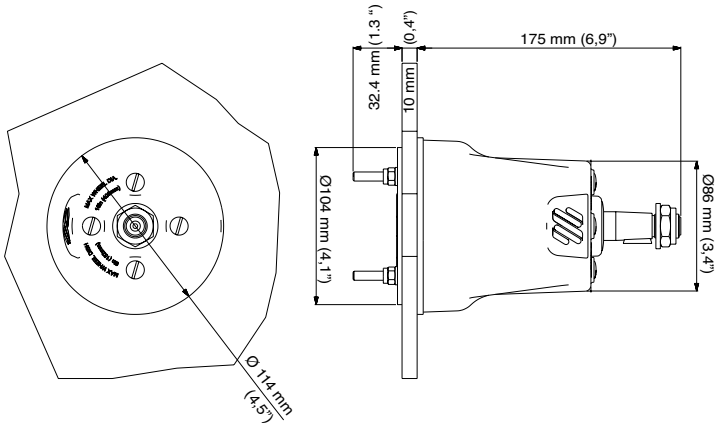

UH32-F and UH40-F dimensions

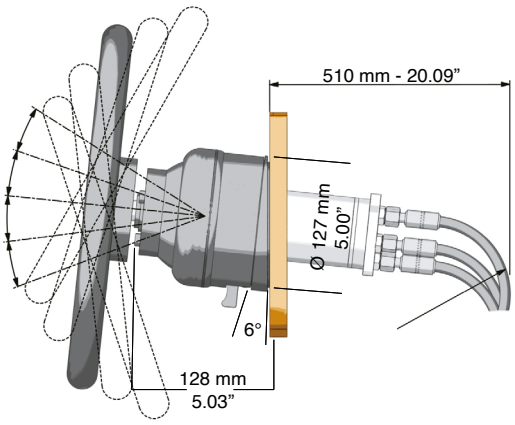

UH32-T and UH40-T dimensions

X88 - Tilt mechanism- 1A0044006L

Tilt mechanism for MasterDrive™ tilt mount helms.
Tilt range of 48° and five locking positions



X88

MDF90 90° - two fitting kit for Masterdrive helms (optional)- 1A0042821F

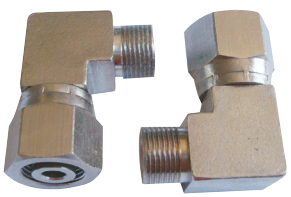

MDF-90

K81 / K81MM - Intermediate helm position installation kit (optional)

- **K81** - 1A0042435A
  Kit to permit the MasterDrive™ helm installation at an intermediate dashboard position
- **K81MM** - 1A0042498B
  Suitable Version for Mercury® Verado™ power-assisted helm.



K81



K81MM

UPMD - Power Unit - 1A0042096E

- 12VDC Motor
- 90° swiveling fittings for easy installation
- Semitransparent 0,5 litre (0.11gal) tank gives immediate oil level vision
- Vented filler plug
- Suitable for applications with autopilot
- Bulkhead or floor mount
- Black galvanized motor case, salt water resistant
- 4,5 m (15') Wiring Harness included
- IP67 waterproof
- Ignition protected (SAE J-1171 and UNI EN 28846)

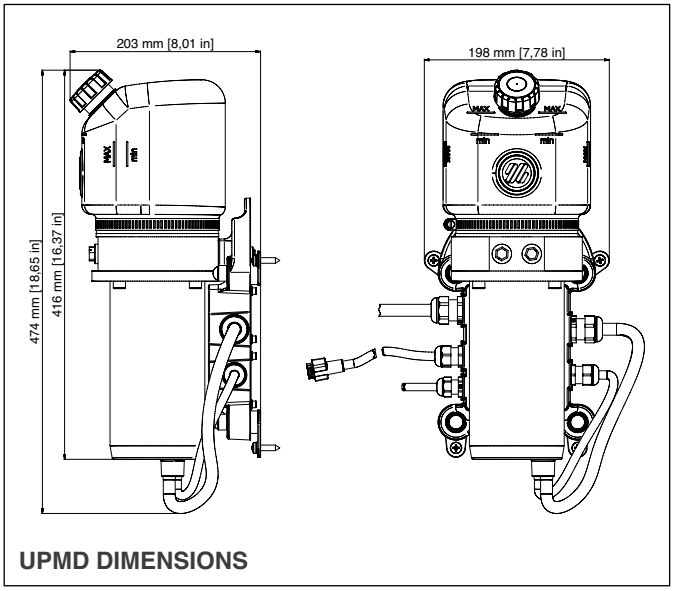

UPMD DIMENSIONS



UPMD

Note: UPMD-NP 1A0044039C **Power Unit** for applications without UCMD user interface - available upon request

MasterDrive™
Power Assisted Outboard Steering System

UCMD - User interface - 1A0042097G

- Safety switch ON/OFF (SMART BUTTON)
- Three different power levels with light indicator (PATENTED)
- Motor temperature visual indicator
- Twin engine key selection included
- Lighted panel for stand-by position
- Plug-in wiring harness
- Suitable for a second station installation
- **MD-EX7** – 1A0042636L 7m (23 ft) panel extension cable also available



UCMD

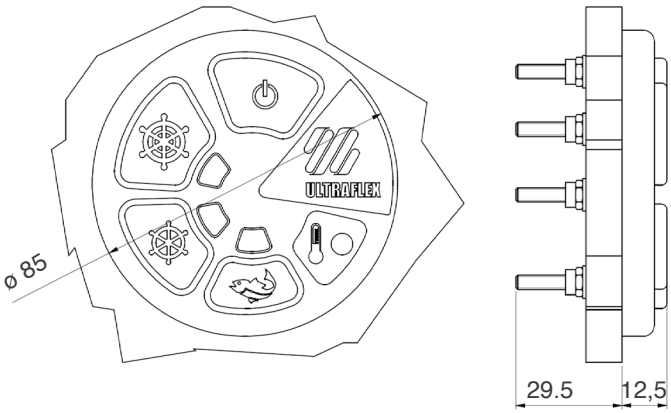

UCMD DIMENSIONS

MD - packaged kit for single station

MasterDrive packaged kit contains:
- 1x **UH** Main Helm Pump
- 1x **UPMD** Power Unit, 15' (4,5 m) wiring harness included
- 1x **UCMD** User Interface
- 4 liters **OL 150** hydraulic oil
- Installation Manual
- Anti-vibration sleeves

Depending on the helm type, 4 versions are available:
MD32-F 1A0042098 J
32 cc Front Mount Helm included
MD32-T 1A0042100S
32 cc Tilt Mount Helm included
MD40-F 1A0042102W
40 cc Front Mount Helm included
MD40-T 1A0042104A
40 cc Tilt Mount Helm included
The SilverSteer UC128-SVS or UC130-SVS cylinder, the hydraulic hose kits, the **X88** - 1A0044006L tilt mechanism, the tie bar and the wheel are to be ordered separately
7 m (23 ft) Panel extension cable also available - 1A0042636L

NOTE: Single-station MasterDrive kits without a control panel are available upon request.



MD KIT

KIT OB - Hydraukic hose kit

KIT OB	LENGTH	P. No.
KIT OB-30	3,00 m - 9.8 ft	1A0040852G
KIT OB-35	3,50 m - 11.5 ft	1A0040853J
KIT OB-40	4,00 m - 13.2 ft	1A0040752C
KIT OB-45	4,50 m - 14.8 ft	1A0040753E
KIT OB-50	5,00 m - 16.4 ft	1A0040754G
KIT OB-55	5,50 m - 18.0 ft	1A0040755J
KIT OB-60	6,00 m - 19.7 ft	1A0040749P

KIT OB	LENGTH	P. No.
KIT OB-65	6,50 m - 21.3 ft	1A0040648H
KIT OB-70	7,00 m - 22.9 ft	1A0040796Z
KIT OB-75	7,50 m - 24.6 ft	1A0040854L
KIT OB-80	8,00 m - 26.3 ft	1A0040855N
KIT OB-85	8,50 m - 27.8 ft	1A0040856R
KIT OB-90	9,00 m - 29.5 ft	1A0040857T



MasterDrive Hose kits

KIT OB-SVS	LENGTH	PART No.
KIT OB-SVS-10	1,00 m - 3.3 ft	1A0043583X
KIT OB-SVS-15	1,50 m - 4.9 ft	1A0043585B
KIT OB-SVS-20	2,00 m - 6.6 ft	1A0043584Z
KIT OB-SVS-25	2,50 m - 8.2 ft	1A0043586D
KIT OB-SVS-30	3,00 m - 9.8 ft	1A0043587F
KIT OB-SVS-35	3,50 m - 11.5 ft	1A0043588H
KIT OB-SVS-40	4,00 m - 13.1 ft	1A0043589K
KIT OB-SVS-45	4,50 m - 14.8 ft	1A0043590U
KIT OB-SVS-50	5,00 m - 16,4 ft	1A0043591W

KIT OB-SVS	LENGTH	PART No.
KIT OB-SVS-55	5,50 m - 18.0 ft	1A0043592Y
KIT OB-SVS-60	6,00 m - 19.7 ft	1A0043593A
KIT OB-SVS-65	6,50 m - 21.3 ft	1A0043594C
KIT OB-SVS-70	7,00 m - 22.9 ft	1A0043595E
KIT OB-SVS-75	7,50 m - 24.6 ft	1A0043596G
KIT OB-SVS-80	8,00 m - 26.3 ft	1A0043597J
KIT OB-SVS-85	8,50 m - 27.8 ft	1A0043598L
KIT OB-SVS-90	9,00 m - 29.5 ft	1A0043599N



KIT OB-SVS

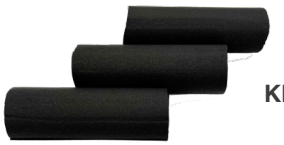

KIT ANTI-VIBRATION SLEEVES - 5A0077970W

Kit OB-2C130-SVS - Dual cylinder / dual and triple engine connection kit for UC128-SVS or UC130-SVS

Two high pressure Kevlar stranded flexible hoses with pre-crimped fittings.
Recommended for use with **UC128-SVS** or **UC130-SVS** only.

Double Engine Installation Kit:

KIT OB-2C130-SVS	ENGINE CENTERS	HOSE LENGTH	PART No.
KIT OB-2C130-SVS-38	660 mm (26”)	381 mm (15”)	1A0043615H
KIT OB-2C130-SVS-41	686 mm (27”)	407 mm (16”)	1A0043616K
KIT OB-2C130-SVS-43	711 mm (28”)	432 mm (17”)	1A0043617M
KIT OB-2C130-SVS-45	724 mm (28.5”)	445 mm (17.5”)	1A0043618P
KIT OB-2C130-SVS-46	737 mm (29”)	457 mm (18”)	1A0043619S
KIT OB-2C130-SVS-48	762 mm (30”)	483 mm (19”)	1A0043620A
KIT OB-2C130-SVS-50	777 mm (30.5”)	496 mm (19.5”)	1A0043621C
KIT OB-2C130-SVS-51	788 mm (31”)	508 mm (20”)	1A0043622E
KIT OB-2C130-SVS-53	813 mm (32”)	534 mm (21”)	1A0043623G

Triple Engine Installation Kit:

KIT OB-2C130-SVS-110	660 mm (26”)	1041 mm (41”)	1A0043738A
KIT OB-2C130-SVS-120	711 mm (28”)	1143 mm (45”)	1A0043742R
KIT OB-2C130-SVS-130	762 mm (30”)	1245 mm (49”)	1A0043788S
KIT OB-2C130-SVS-140	813 mm (32”)	1347 mm (53”)	1A0043752U



KIT OB-2C130-SVS

NOTE: For **four-engine/double cylinder** installations, please contact our Technical Service.

MasterDrive™
Power Assisted Outboard Steering System

KIT OB-2S-SVS - Kit for a second steering station or autopilot for Silversteer and MasterDrive steering systems

KIT OB-2S-SVS - 1A0043415Z
Components:
2x T fittings
4x 1/4 NPT 9/16-24 UNEF straight fittings
TU95 hose x10 m (32 ft)
1x KIT OB-SVS-50 part No. 1A0041290V
1x non-vented cap



KIT OB-2S-SVS

MD2 - packaged kit for dual station

Master Drive™ MD2 packaged kit for dual station contains:
- 1x **UHD** Secondary helm pump
- 1x **UCMD** User interface
- 1x **MD-EXT 7S -** 1A0074162W - 23 ft (7 m) electric cable for the second station comunications
- **OL 150** - 1A0042398X1 liter of hydraulic oil
- 1x **MDSF38 -** 1A0070957S - 3/8" straight fitting
- 2x **MDTF38 -** 1A0070831T - 3/8" T fittings
- Installation Manual

Depending on the helm type, 4 versions are available:
MD2 32-F - 1A0042610S
32 cc Front Mount Helm included
MD2 32-T - 1A0042611U
32 cc Tilt Mount Helm included
MD2 40-F - 1A0042520R
40 cc Front Mount Helm included
MD2 40-T - 1A0042612W
40 cc Tilt Mount Helm included



KIT MD 2

MODEL	P. No.	MOUNTING	DISPLACEMENT/ REVOLUTION	APPLICATION	No. OF STATIONS	MAXIMUM WHEEL DIA.
UHD32-F	1A0042615C	front mount	32cc - 1.95 cu.in	Single cylinder	2	406 mm - 16"
UHD32-T	1A0042616E	with X88 tilt	32cc - 1.95 cu.in	Single cylinder	2	406 mm - 16"
UHD40-F	1A0042094A	front mount	40cc - 2.44 cu.in	Dual cylinder	2	406 mm - 16"
UHD40-T	1A0042617G	with X88 tilt	40cc - 2.44 cu.in	Dual cylinder	2	406 mm - 16"

To order separately:
1x Kit OB-SVS with length equal to the distance between the main helm pump and the secondary helm pump
1x Kits OB-SVS: select the desired length
1x Kits OB: select the desired length

For dual cylinder applications, order:
1x KIT OB-2C130-SVS: select the desired length.

The tilt mechanism **X88** – 1A0044006L and the wheel are to be ordered separately.

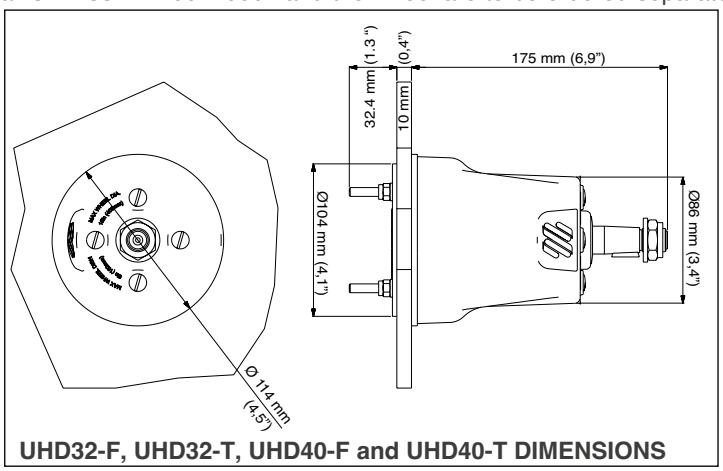

UHD32-F, UHD32-T, UHD40-F and UHD40-T DIMENSIONS

Single cylinder single station application

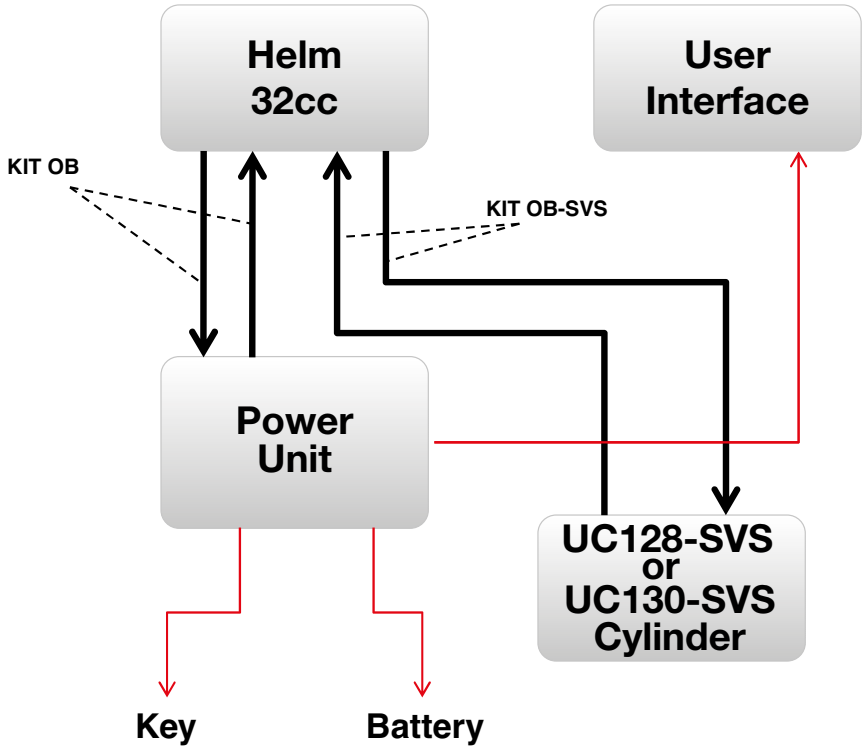

— wiring harness — high pressure hoses

Dual cylinder single station application

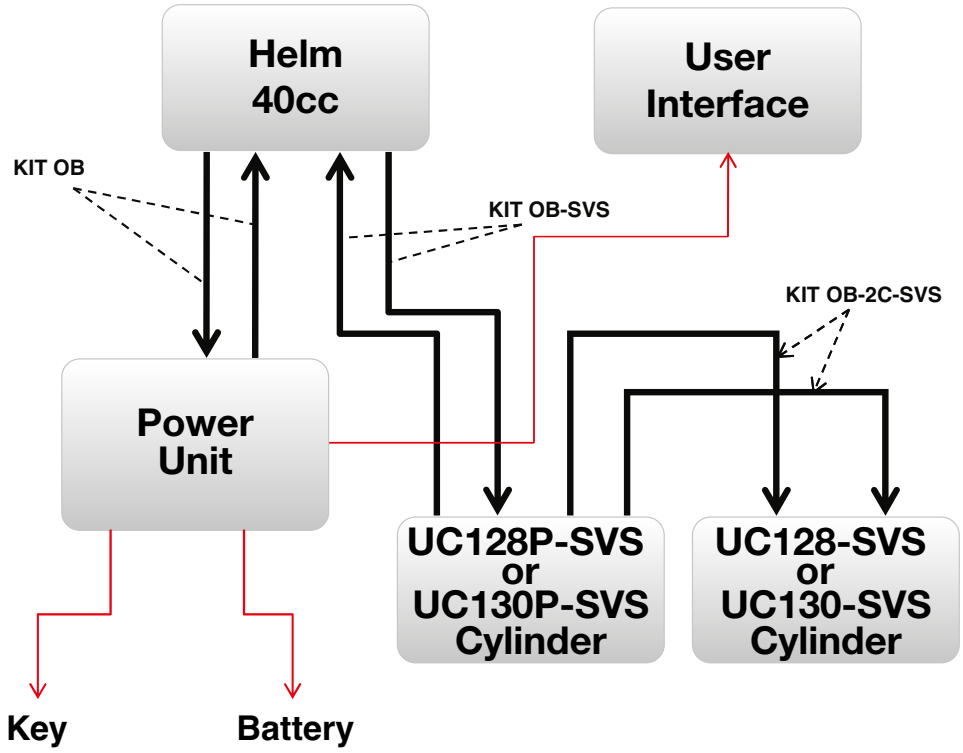

— wiring harness — high pressure hoses

MasterDrive™
Power Assisted Outboard Steering System

Single cylinder dual station application

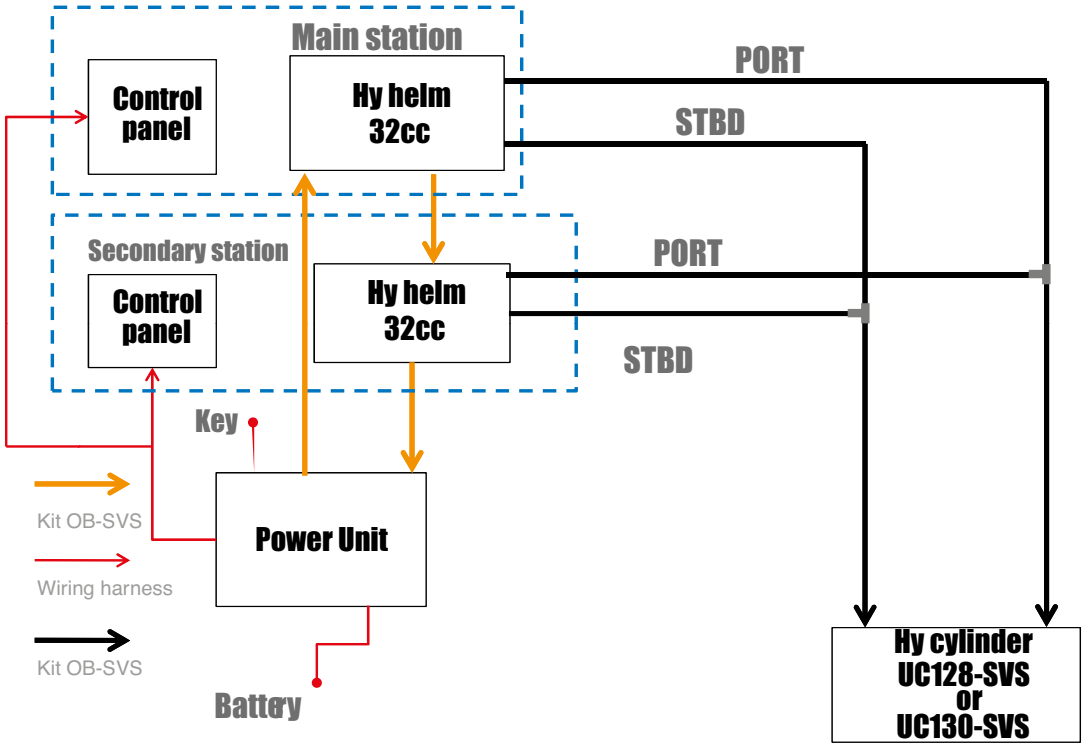

Dual cylinder dual station application

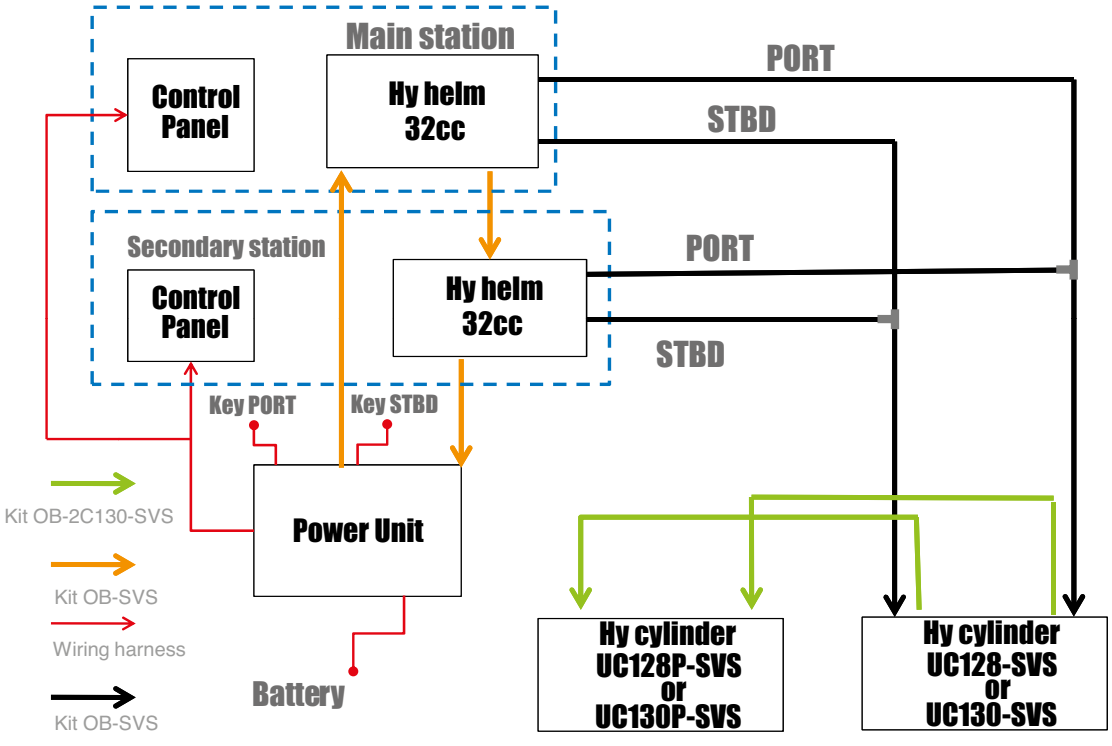

Warning:
MasterDrive system is intended for use with SilverSteer™ UC128-SVS or UC130-SVS cylinders only

APPLICATION	COMPONENTS	PART NUMBER	Q.TY
Single engine single cylinder	KIT MD32-F packaged MasterDrive™ kit includes 32cc front mount helm	1A0042098J	
	UC128-SVS/1 or UC130-SVS/1 SilverSteer™ cylinder (or UC128-SVS/2 or UC130-SVS/2)	cylinder selection	1
	KIT OB - hydraulic hose kit	specify length	1
	KIT OB-SVS hydraulic hose kit	specify length	1
	Steering wheel	wheel selection	1
	KIT MD32-T packaged MasterDrive™ kit includes 32cc tilt mount helm	1A0042100S	
	UC128-SVS/1 or UC130-SVS/1 SilverSteer™ cylinder (or UC128-SVS/2 or UC130-SVS/2)	cylinder selection	1
	KIT OB - hydraulic hose kit	specify length	1
	KIT OB-SVS hydraulic hose kit	specify length	1
	X88 tilt mechanism	1A0044006L	1
	Steering wheel	wheel selection	1
Dual engine single cylinder	KIT MD32-F packaged MasterDrive™ kit includes 32cc front mount helm	1A0042098J	
	UC128-SVS/1 or UC130-SVS/1 SilverSteer™ cylinder (or UC128-SVS/2 or UC130-SVS/2)	cylinder selection	1
	KIT OB - hydraulic hose kit	specify length	1
	KIT OB-SVS hydraulic hose kit	specify length	1
	Steering wheel	wheel selection	1
	A96 tie bar	tie bar selection	1
	KIT MD32-T packaged MasterDrive™ kit includes 32cc tilt mount helm	1A0042100 S	
	UC128-SVS/1 or UC130-SVS/1 SilverSteer™ cylinder (or UC128-SVS/2 or UC130-SVS)	cylinder selection	1
	KIT OB - hydraulic hose kit	specify length	1
	KIT OB-SVS hydraulic hose kit	specify length	1
	X88 tilt mechanism	1A0044006L	1
	Steering wheel	wheel selection	1
	A96 tie bar	tie bar selection	1
Dual engine dual cylinder	KIT MD40-F packaged MasterDrive™ kit includes 40cc front mount helm	1A0042102W	
	UC128-SVS/1 or UC130-SVS/1 SilverSteer™ cylinder (or UC128-SVS/2 or UC130-SVS/2)	cylinder selection	1
	UC128P-SVS/1 or UC130P-SVS/1 SilverSteer™ cylinder (or UC128P-SVS/2 or UC130P-SVS/2)	cylinder selection	1
	KIT OB - hydraulic hose kit	specify length	1
	KIT OB-SVS hydraulic hose kit	specify length	1
	KIT OB-2C130-SVS hydraulic hose cylinder connection kit	specify length	1
	Steering wheel	wheel selection	1
	A95 tie bar	tie bar selection	1
	KIT MD40-T packaged MasterDrive™ kit includes 40cc tilt mount helm	1A0042104A	
	UC128-SVS/1 or UC130-SVS/1 SilverSteer™ cylinder (or UC128-SVS/2 or UC130-SVS/2)	cylinder selection	1
	UC128P-SVS/1 or UC130P-SVS/1 SilverSteer™ cylinder (or UC128P-SVS/2 or UC130P-SVS/2)	cylinder selection	1
	KIT OB - hydraulic hose kit	specify length	1
	KIT OB-SVS hydraulic hose kit	specify length	1
	KIT OB-2C130-SVS hydraulic hose cylinder connection kit	specify length	1
	X88 tilt mechanism	1A0044006L	1
	Steering wheel	wheel selection	1
	A95 tie bar	tie bar selection	1
For a second station add:			
KIT MD2 for dual station		**specify kit**	1
KIT OB - hydraulic hose kit		**specify length**	1
KIT OB-SVS hydraulic hose kit		**specify length**	1
KIT OB-2C130-SVS (for use with dual cylinder only)		**specify length**	1

NOTE:
On request, Power Unit wiring harness can be cut to length required 7 m (23 ft) Panel extension cable also available **MDEX7** - 1A0042636L

UC133-IOB / UC132-OBS
Sterndrive cylinders

UC133-IOB - 1A0039429M **- Sterndrive Cylinder**



- Balanced cylinder: the number of turns lock to lock is equal port to starboard or vice-versa
- This side mount cylinder features a turning nut for a fast and easy installation to the engine tube (PATENTED)

APPLICATIONS: not recommended for use in installations where the boat speed exceeds 55 mph (48 knots)
Not intended for use in racing application.

UC132-OBS - 1A0039430W **- Side Mount Cylinder**



UC132-OBS Unbalanced: the wheel number of turns lock-to-lock is not equal port to starboard and vice-versa
- This side mount cylinder features a turning nut for a fast and easy installation to the engine tube (PATENTED)
- Clearance required at the engine tube side: 375 mm (14.76”)

APPLICATIONS: not recommended for use in installations where the boat speed exceeds 55 mph (48 knots) (60 mph (52 knots) for dual cylinder / dual engines installations)
Not intended for use in racing applications

WARNING: UC132-OBS cylinder is not intended for use with 105 Bar (1500 PSI) SilverSteer series helms.

SPECIFICATIONS	UC133-IOB Balanced	UC132-OBS Unbalanced
Volume	132 cc - 8 cu. in	132 / 163 cc - 8 / 9.95 cu. in
Torque	66 kgm - - 5738 lbs. in	
Output force	464 kg -1023 lbs	464 / 574 kg - 1023 / 1265 lbs
Inside diameter	32 mm - 1.25”	32 mm - 1.25”
Stroke	203 mm - 8”	203 mm - 8”
3/8” (9,5 mm) Fittings	For high pressure flex hose	For high pressure flex hose

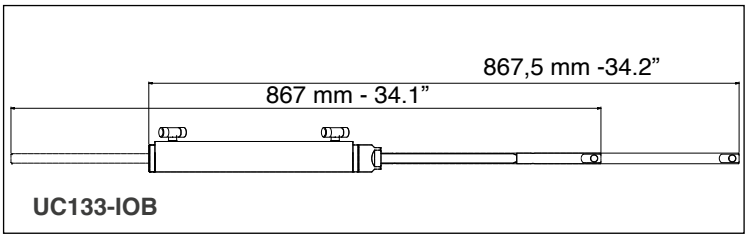

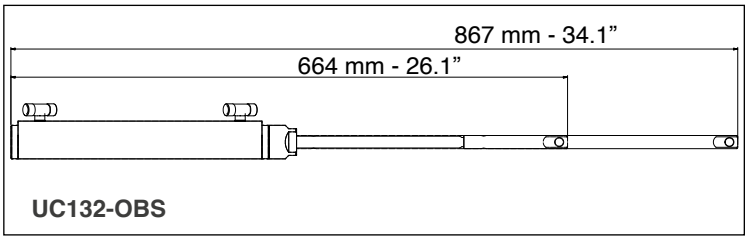

Applications

WARNING These recommendations should be used as general reference only and they apply to factory stock sterndrives only. In doubt, contact a qualified installation technician.

ENGINE	YEAR	MODEL	STERNDRIVE CYLINDERS			
			non power assist engine	see notes	power assisted engine	see notes
MERCRUISER®	To date	ALPHA	UC133-IOB	1, 3	UC132-OBS	2
	To date	BRAVO ONE	UC133-IOB	1, 3	UC132-OBS	2
	To date	BRAVO TWO	UC133-IOB	1, 3	UC132-OBS	2
	To date	BRAVO THREE	UC133-IOB	1, 3	UC132-OBS	2
VOLVO®	To date	275	UC168-I		N/D	
	To date	280	UC133-IOB	1, 3, 4	UC132-OBS	2
	To date	290	UC133-IOB	1, 3, 4	UC132-OBS	2
	To date	DP-E	UC133-IOB	1, 3, 5	UC133V-IOB	
	To date	DP-G	N/A		UC133V-IOB	
	To date	DP-S	N/A		UC132-OBS	2
YANMAR®	To date	ZT350	N/A		UC132-OBS	2

1. Balanced cylinder the number of turns lock to lock is equal port to starboard or vice-versa
2. Unbalanced cylinder the number of turns lock to lock is not equal port to starboard or vice-versa
3. Clearance required at the engine tube side: 21.2" (540 mm).
4. ULTRAFLEX hydraulic cylinder can be installed as an alternative to a mechanical steering system only.
5. The Volvo P. No. 872388 adaptor fitting is required for the installation.

NOTE: For applications with sterndrive engines not listed above, please contact our Technical Service.

Order guide

NOTE: 3/8" or 10 mm diameter copper tubing can be used as an alternative tubing for plumbing the systems. For these applications a fitting kit – KIT 95 or KIT 100 – is required.

Turn lock to lock: Balanced 4.7 - Unbalanced 4.7/5.8
Max rudder torque: 66 kgm - 5738 lbs. in

Components	Model	Qty	
Helm pump	UP28	1	For additional station add: 1 UP28 helm pump, 1 KIT OB-2S fitting kit, 1 KIT OB hose Kit, extra OL 150, 1 steering wheel
Cylinder	see application	1	
Hose kit	KIT OB	1	
Oil	OL 150	3	
Steering wheel	(Wheel selection)	1	

Turn lock to lock: Balanced 4 - Unbalanced 4/5
Max rudder torque: 66 kgm - 5738 lbs. in

Components	Model	Qty	
Helm pump	UP33	1	For additional station add: 1 UP33 helm pump, 1 KIT OB-2S fitting kit, 1 KIT OB hose Kit, extra OL 150, 1 steering wheel
Cylinder	see application	1	
Hose kit	KIT OB	1	
Oil	OL 150	3	
Steering wheel	(Wheel selection)	1	

Bulkhead hose kits

R5 - R5SS Bulkhead strain relief hose kit

R5 kit distributes strain from bends in hose.
It features a water tight gripper fitting and a bulkhead fitting flange for hose protection.

R5	1A0039510U	Bulkhead hose kit
R5SS	1A0042419C	Bulkhead hose kit with stainless steel flange



R5



R5SS

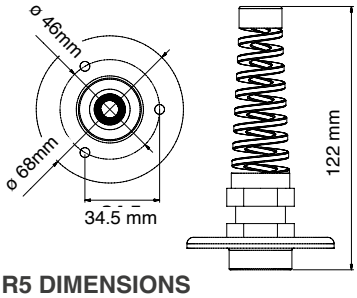

R5 DIMENSIONS

R7 - 3/4"Bulkhead fitting kit

3/4" bulkhead fitting kit for single cylinder installation.
2 assemblies as illustrated per kit.

R7	1A0040819J	3/4" bulkhead fitting kit



R7 KIT

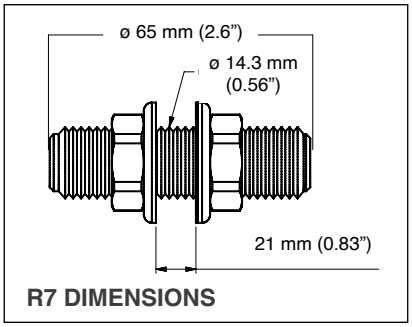

R7 DIMENSIONS

R8 - Dual thru-hull hose kit

Connection flange available in three different colours

R8B	1A0041299P	Connection flange - black
R8W	1A0041300V	Connection flange - white
R8CH	1A0041301X	Connection flange - chrome plated



R8B



R8W



R8CH

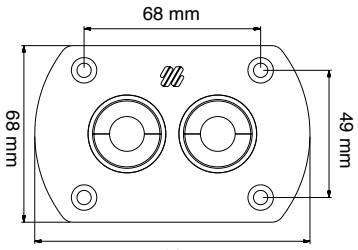

R8 DIMENSIONS

R9 Bulkhead kit for dual hose with preassembled fittings

Connection flange available in three different colours

R9B	1A0043165C	Connection flange - black
R9W	1A0043167G	Connection flange - white
R9CH	1A0043166E	Connection flange - chrome plated



R9B



R9W

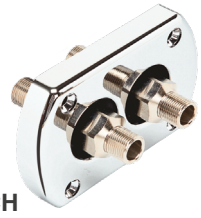

R9CH

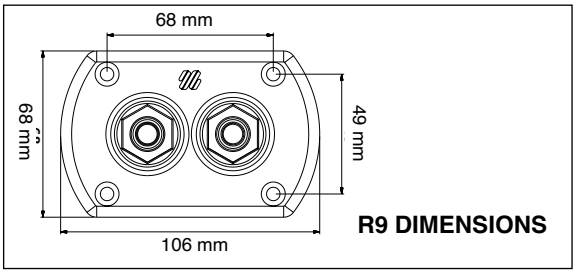

R9 DIMENSIONS

K18 - Kit for autopilot applications with GOTECH™

K18 - 1A0043414X

Components:
2x T fittings
8x reusable fittnigs for TU 1/4
3x 1/4 NPT 9/16-24 UNEF straight fittings
1x 1/8 NPT 9/16-24 UNEF straight fitting
TU1/4 hose x10 m (32 ft)
TU95 hose x5 m (16 ft)



K18

KIT OB-2S-5/16 - Kit for a second steering station or autopilot for Hydraulic steering systems with 5/16" (TU 5/16) hose

KIT OB-2S-5/16 - 1A0043401M

Components:
2x T fittings
8x reusable fittnigs for TU5/16
4x 1/4 NPT 9/16-24 UNEF straight fittings
2x 1/8 NPT 9/16-24 UNEF straight fitting
TU95 hose x10 m (32 ft)
TU5/15 hose x10 m (32 ft)
1x non-vented cap

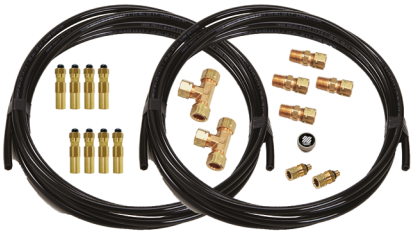

KIT OB-2S-5/16

KIT OB-2S-SVS - Kit for a second steering station or autopilot for SILVERSTEER™ e MASTERDRIVE™ steering systems

KIT OB-2S-SVS - 1A0043415Z

Components:
2x T fittings
4x 1/4 NPT 9/16-24 UNEF straight fittings
TU95 hose x10 m (32 ft)
1x KIT OB-SVS-50 part No. 41290 V
1x non-vented cap



KIT OB-2S-SVS

Tubing - accessories

Hoses, fittings, bend restrictors for installation and integration with autopilot

TU1/4	1A0042573N	1/4” tubing for outboard engines applications with Gotech™ only. Available per metre
TU5/16	1A0041305F 1A0042574R 1A0041389R	5/16” nylon tubing recommended for outboard engines applications and fittings OB-F5/16 Available per metre (1A0041305F), 50 m (164 ft) coils (1A0042574R) and 150 m (492 ft) coils (1A0041389R).
OB-F1/4	1A0042656T	Two reusable fittings featuring turning nut for use with 1/4” hydraulic hose for Gotech™ only.
OB-F5/16	1A0042670L	Two reusable fittings featuring turning nut for use with 5/16” hydraulic hose and connection for 3/8” fitting
KIT 2M-5/16	1A0041822C	Kit with 2 bend restrictors 5/16”
TU95	1A0070701D	3/8” nylon tubing. It is not recommended in the applications where the total tubing run exceeds50 ft (15 m). Not recommended for use with UC128-OBF and UC130-SVS cylinders

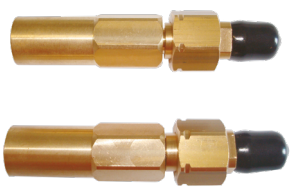

OB-F1/4

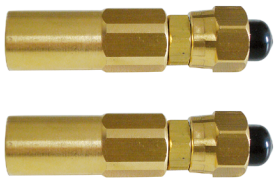

OB-F5/16



KIT 2M-5/16

Accessories

OL 150 - 1A0042398X:
Hydraulic oil sold in 1 litre (0.26 gallons) bottle

- Hydraulic oil: IS0 VG 15
- Solidification point: <- 30 °C
- Contamination according to NAS1638 ≤ 8



OL 150

KIT F - 1A0039664Y:
Remote fill adapter for rear mount and tilt mount pumps.



KIT F

61BCA - 1A0071004K
3/8” (9,5 mm) nut and sleeve assembly, brass

61CA - 1A0071013L
3/8” (9,5 mm) nut and sleeve assembly, nickel plated

AF45-130 - 1A0043412T
45° adjustable fitting for UC130-SVS cylinder

AF45 - 1A0041284A
45° adjustable fitting, helm and tube. Suitable for SilverSteer™ system only.

AF90 - 1A0074144U
90° adjustable fitting, nickel plated brass, for standard pumps (except UP18), UP20 - 42955 D and SilverSteer™ pumps.

SF38 - 1A0039471L
3/8” (9,5 mm) connector fitting, helm and tube

SF18 - 1A0043179P
1/8” (3.18 mm) straight pump fitting

SF12 - 1A0041306H
straight fitting, helm and tube Ø 12 mm

EF38 - 1A0039472N
3/8” (9,5 mm) 90° fitting for UP18 and for helms part number:

1A0037939U - UP20 F	1A0040153D - UP20 T
1A0039618R - UP25 F	1A0041273V - UP25NV F
1A0039443F - UP28 F	1A0039422X - UP33 F
1A0041275Z - UP33NV F	1A0039415A - UP39 F
1A0041276B - UP45 F	1A0040803T - UP25 T
1A0039445K - UP28 T	1A0039446M - UP33 T
1A0039447P - UP39 T	1A0041227D - UP45 T
1A0039970F - UP28 R	1A0039969X - UP33 R
1A0039444H - UP39 R	1A0041278F - UP45 R

EF18 - 1A00000137
1/8” (3,18 mm) 90° fitting for UP18 and UP20

TF916 - 1A0076828M
9/16” (14.3 mm) x 24 union T for tube

VF38 - 1A0039503X
3/8” (9,5 mm) bleed T for cylinder, brass

VFN38 - 1A0039925A
3/8” (9,5 mm) bleed T for cylinder, nickel plated

VFNO38 - 1A0040868Y
3/8” (9,5 mm) adjustable bleed T for cylinder, nickel plated, for all cylinders except UC81-OBF and UC94-OBF with serial number prior to 30 1156 000001

VFN916 - 1A0043835Y
9/16 (14.3 mm) x 24 for dual station, nickel plated

QCFN - 1A0041307K
Quick connect bleed T for cylinder, nickel plated, for all cylinders except UC94-OBF with serial number prior to 30 1156 000001

QCFN94 - 1A0041308M
Quick connect bleed T for cylinder, nickel plated with DN5 quick connect, for UC94-OBF cylinders with serial number prior to 30 1156 000001

SF916 - 1A0043155Z
9/16” (14.3 mm) nickel plated brass straight fitting

EXT-F916 - 1A0043156B
9/16” (14.3 mm) nickel plated brass male adapter to 9/16” (14.3 mm) female

SF916-14 - 1A0043301H
9/16” (14.3 mm) straight fitting to 1/4 NPT

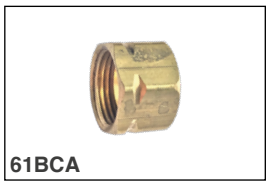
61BCA

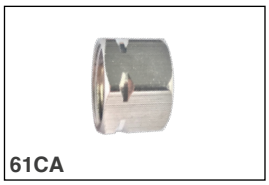
61CA

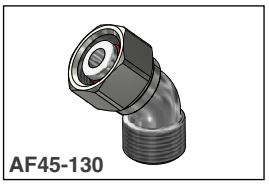
AF45-130

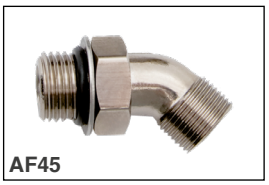
AF45

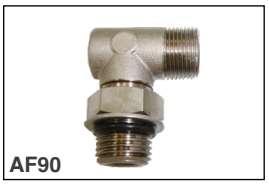
AF90

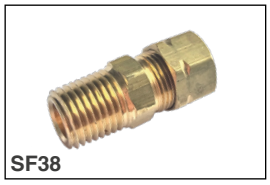
SF38


SF18

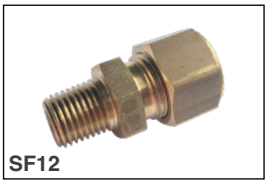
SF12

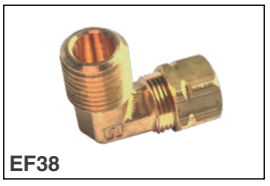
EF38


EF18


TF916

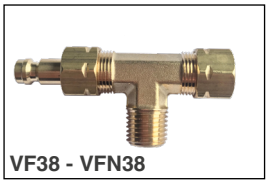
VF38 - VFN38

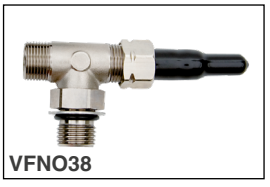
VFNO38


VFN916

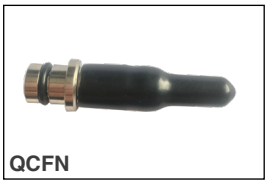
QCFN

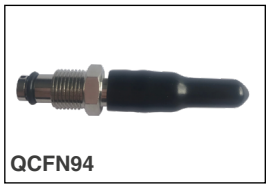
QCFN94

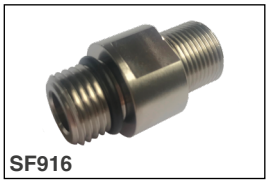
SF916

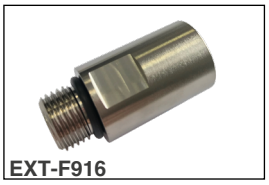
EXT-F916

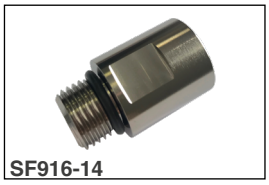
SF916-14

BubbleBuster™

Portable device for automatic filling and purging of hydraulic systems

Reduce time and simplify purging hydraulic steering systems with the self contained and portable BubbleBuster™ purging unit.

Attach the hoses using the quick connect fittings to the helm and cylinder and with the push of a button the BubbleBuster™ begins cycling oil throughout the entire systems free of air.

The system features a ZeroEmulsion pump, 1 gal capacity reservoir and is compatible with competing helms and cylinders.

Zero Emulsion Effect



BubbleBuster™

MODEL	P. No.	DESCRIPTION
BB	1A0041666R	BubbleBuster™ - complete set
KBE1	1A0041682N	Extension kit
KBD2	1A0041703U	Double cylinder purging kit
KH94	1A0041899R	Connection kit for UC94-OBF cylinder with old fittings
KH128	1A0041900W	Connection kit for cylinders with old fittings (except UC95)

Components included

- No. 1 motor pump with safety valve , switch and 5 litres (1 gal) tank included, it allows the purging of 2 hydraulic steering systems before refilling.
- 12V electric motor with thermal protection. Current absorption 8 A
- No. 1 4m (13') electric harness with alligator clips for fast connection with the battery.
- No. 1 double spiralled hose to connect to helm pump. Extended length: 6m (19,6')
- No. 1 double spiralled hose to connect to cylinder. Extended length: 6m (19,6')
- No. 1 utility tray

Spare parts

- **1A0042593V** - Helm purging fitting
- **1A0042595Z** - Fittings replacement kit

Optional components

- **KBE1** No. 1 double spiralled hose to connect to cylinder 15 m (49') extension)
- **KBD2** No. 1 kit for double cylinder systems filling and purge
- **KH94** Connection kit for UC94-OBF cylinders with old bleeders (not fast connect)
- **KH128** Connection kit for cylinders (except UC95) with old bleeders (not fast connect)

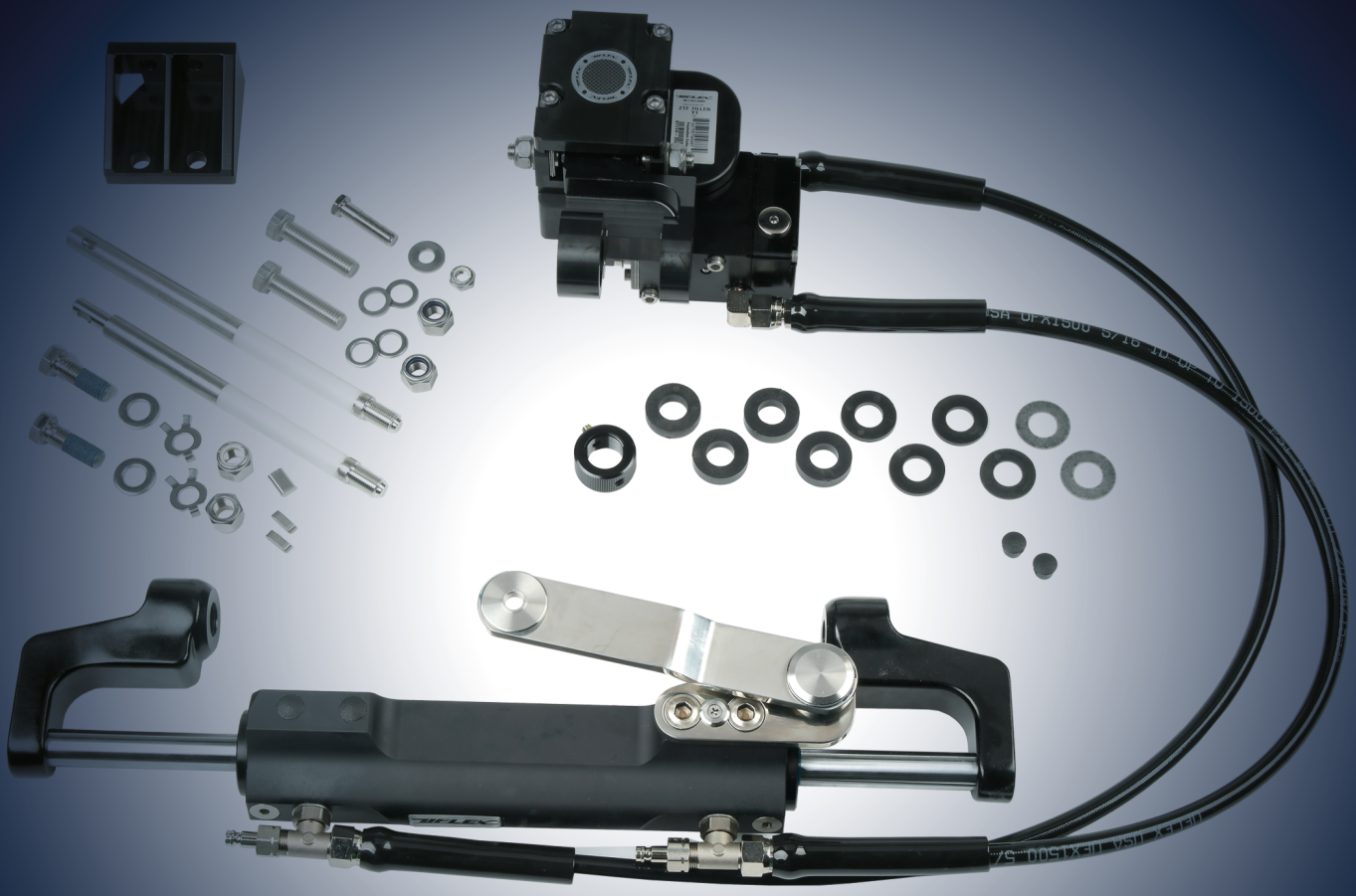

ZTF - Zero Torque Feedback - Tiller steering systems

Today's four stroke outboard engines are generating high torque loads which can make tiller steered boats difficult to steer. The Ultraflex® ZTF Tiller systems eliminate propeller torque at the tiller handle when the driver is not actively changing direction.

Using a patented hydraulic valve, the propeller torque is locked from reaching the tiller handle unless the driver pushes or pulls on the end of the handle, at which point the valve opens and allows for active steering movements.

Now you can drive your tiller steered boat in comfort, saving your energy for reeling in fish rather than effort to just get to your favorite fishing spot.

How the ZTF tiller system works

Push on the end of the tiller handle and the valve opens allowing you to steer.

Pull on the end of the tiller handle and the valve opens allowing you to steer.

Rest your hand on the tiller and the valve remains closed, locking out the propeller torque and providing comfortable boat operation.

WARNING! This system is not intended to be used in place of the boat operator. Operator must maintain contact with the Tiller Handle during operation.

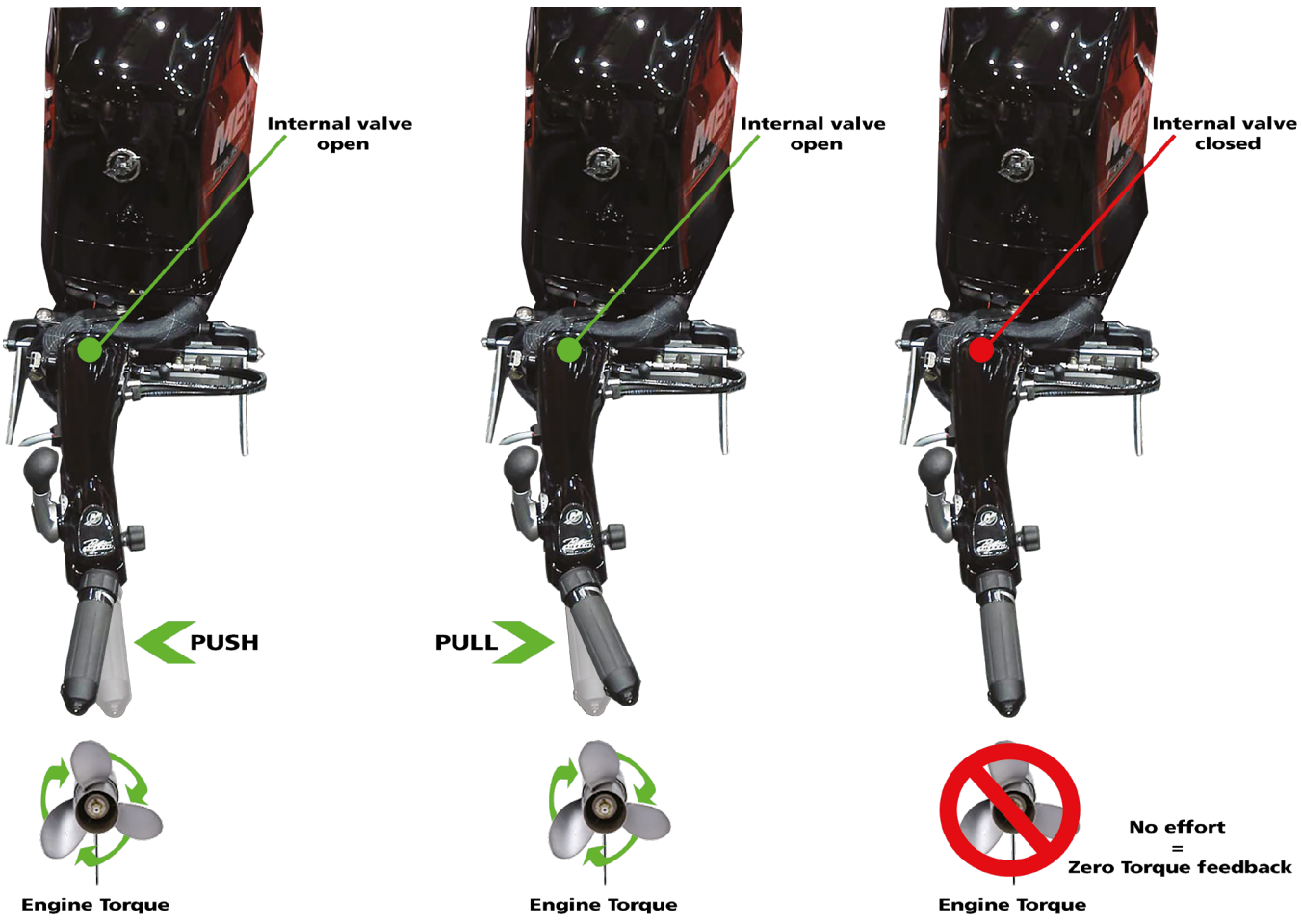

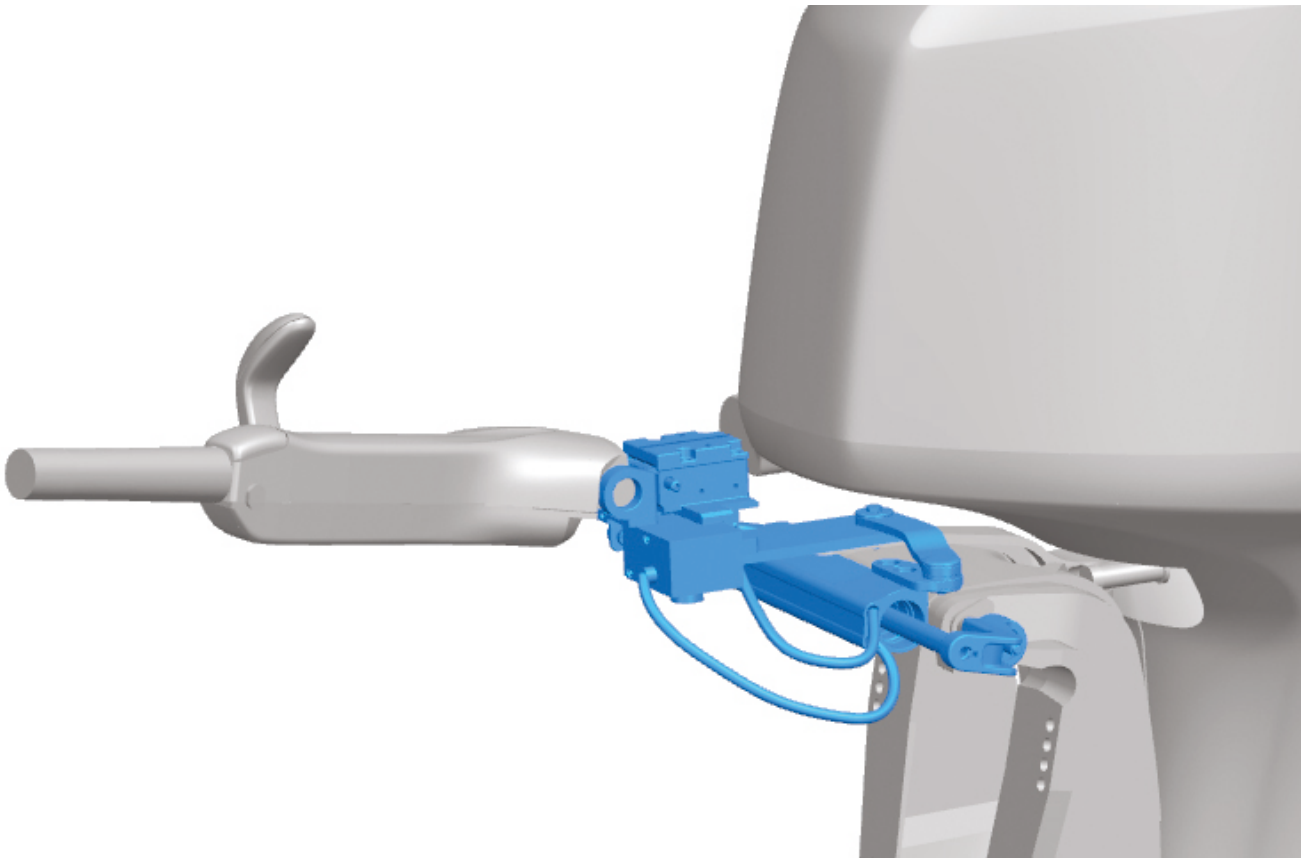

ZTF - Zero torque feedback tiller steering systems

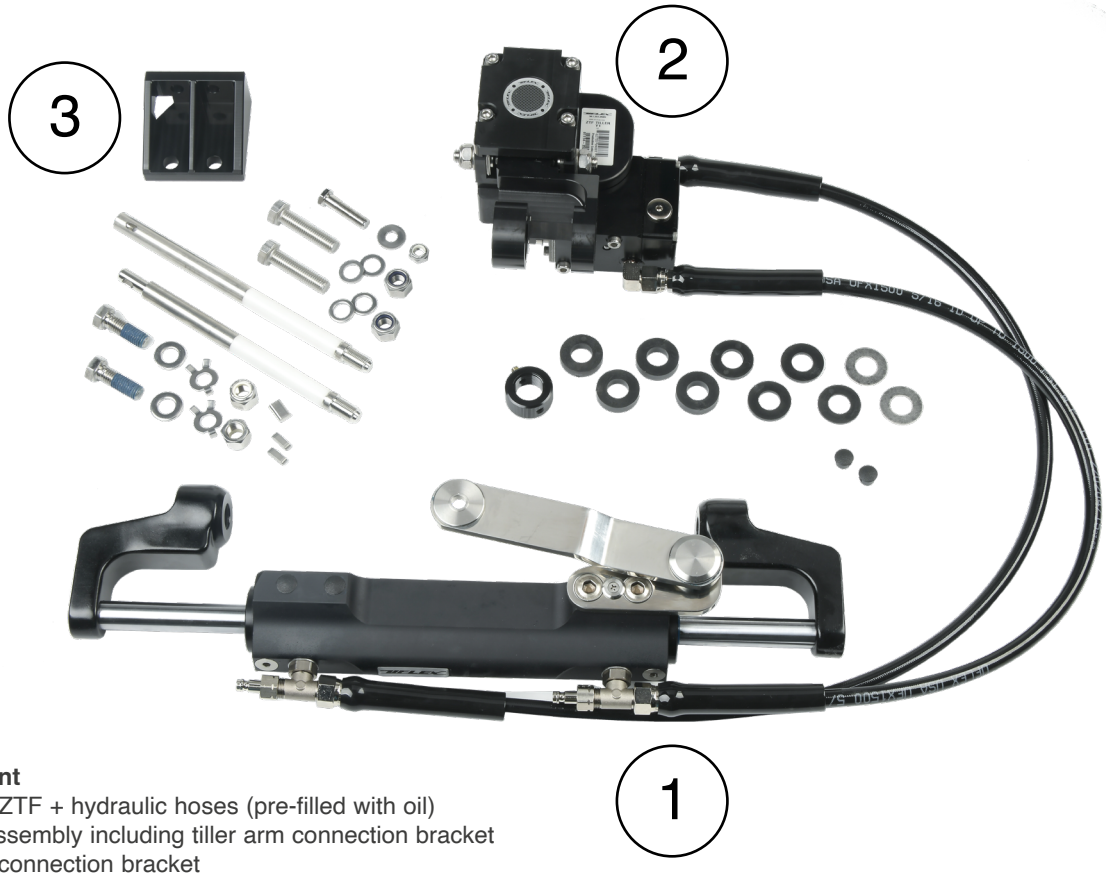

Component
1- UC128-ZTF + hydraulic hoses (pre-filled with oil)
2- Valve assembly including tiller arm connection bracket
3- Engine connection bracket
Other tools:
No. 2 Ultraflex® push-pull cables for throttle and shift

ZTF - Zero Torque Feedback - Tiller steering systems

MERCURY® Zero Torque Feedback tiller steering system

Tiller 40-115 Mercury®

- Rated up to 115 hp
- Easy steering
- Reduced operator fatigue

Note: Mercury® Tiller Arm not included



ZTF Tiller M2	1A0043880D	For use with 75 hp to 115 hp EFI 4 stroke, from 2014 to date

YAMAHA® Zero Torque Feedback tiller steering system

- Rated up to 200 hp Four Stroke
- Easy steering
- Reduced operator fatigue

Note: Yamaha® Tiller Arm not included



ZTF Tiller Y1	1A0043877R	For use with Yamaha® 90 hp - 115 hp - 130 hp - 2015 to date
ZTF Tiller Y2	1A0043878T	For use with Yamaha® 150 hp - 175 hp - 200 hp

SUZUKI® Zero Torque Feedback tiller steering system

- Rated up to 200 hp Four Stroke
- Easy steering
- Reduced operator fatigue

Note: Suzuki® Tiller Arm not included



ZTF Tiller S2	1A0043879V	For use with Suzuki® DF150A - DF175A - DF200A

TOHATSU® Zero Torque Feedback tiller steering system

Tiller Tohatsu®

- Rated up to 140 hp
- Easy steering
- Reduced operator fatigue

Note: Tohatsu® Tiller Arm not included



ZTF Tiller T1	1A0044268U	For use with MFS 75-90-100-115-140mega


veratron
ULTRAFLEX
00:00 AM
TRIM
0
P ENGINE S
F F
1000 rpm 1000
0° 18.0kmh 14.0v
AUTOCRUISE
29° 29°
BACK
HEADING ANCHOR
THRUSTER

Integra™ EPS
Outboard electronic power steering systems

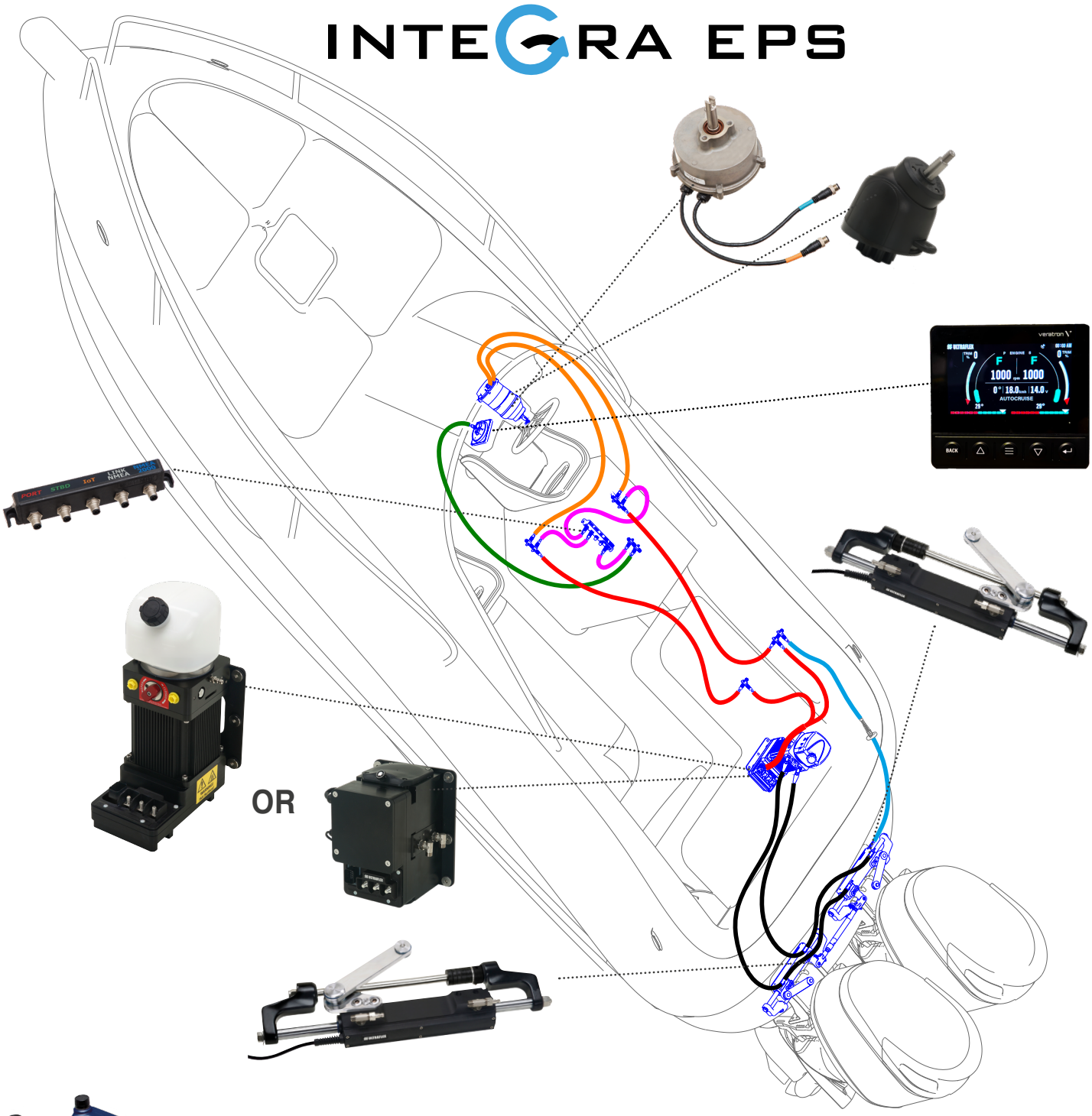







- Great efficiency and quickest response
- Extremely silent
- Redundant waterproof Can bus connection system - Garmin® and Raymarine® Autopilot direct interface
- Very low amperage draw at idle
- Customizable driving mode: Autocruise and Autosport
- Veratron® color display
- Easy installation (simplified configuration)

INTEGRA JS

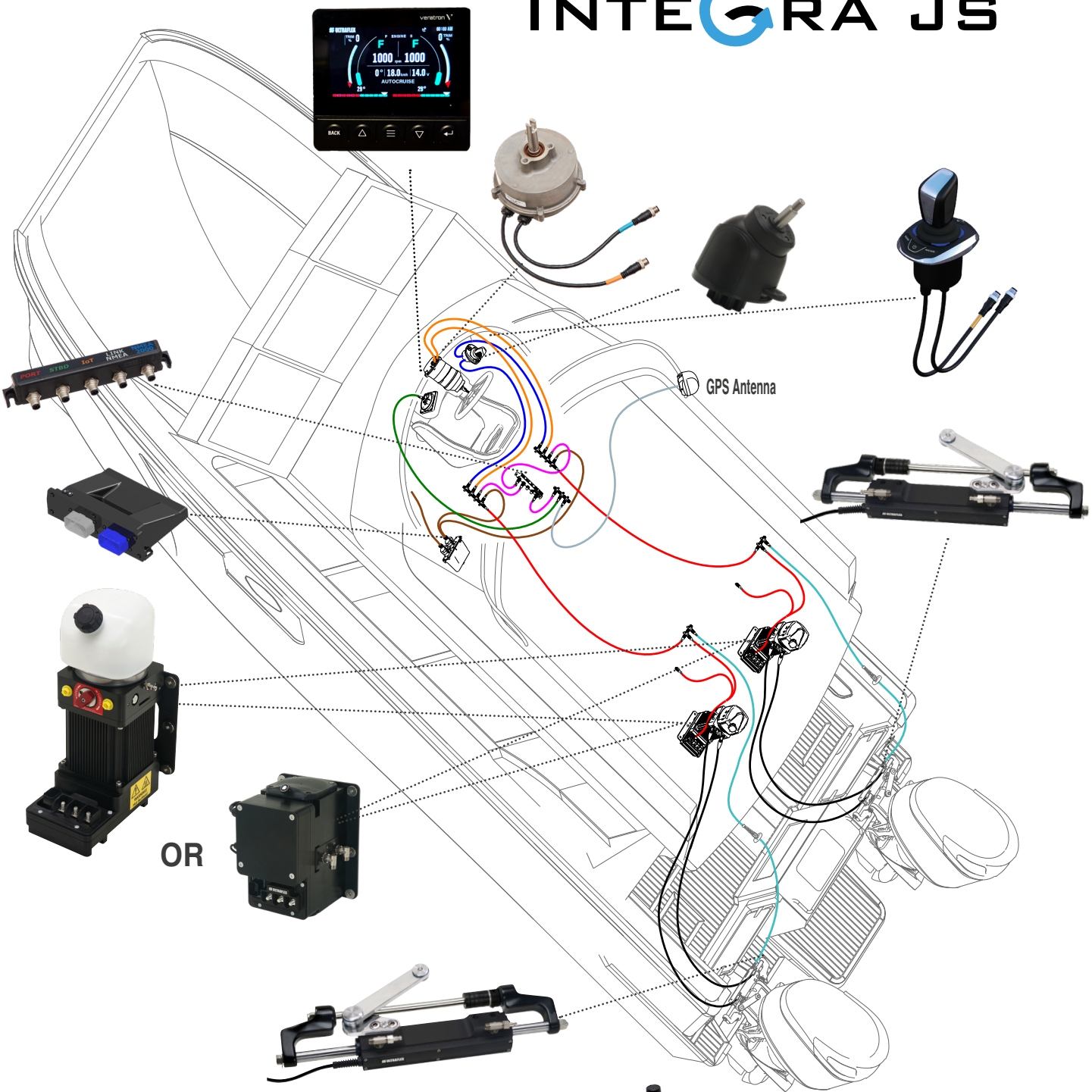

- Integra JS adds to Integra EPS functionalities a new level of manoeuvrability, thanks to the Joystick technology.
- UJS suitable also for single-engine applications.
- Integra JS is a more intuitive way of driving. Designed for low speed manoeuvring the joystick grants precision and driving comfort and facilitates docking and trailer procedures as the boat can move sideways, diagonally or spin on its own axis
- Includes Boost, Heading, Anchor, Mainstay and Trim function
- Compatible with Sleipner® and Vetus® bow thrusters.



Integra™
Outboard electronic power steering systems

Model	UIP	UIPC
Operating voltage	10,8 V - 14,4 V	
Average current draw	5 A	2 A
Temperature range	-25°C / +77°C	
Nominal voltage	12 VDC	
Max flow	4,8 l/min @ 60 bar (cw & ccw)	4,0 l/min @ 50 bar
Relief valve	120 bar - 1740 PSI	105 bar - 1500 PSI
Pump unit motor	12 VDC Brushless	
Outboard engine installations	Single, dual, triple or quad	
N. of engines per motor pump unit	up to 4	up to 2
Autopilot direct interface	Garmin® Raymarine® Furuno® Simrad®	
Customizable Driving mode	Autocruise and Autosport	
Customizable wheel effort	Yes	
Exceeds Safaty Standards	ISO 25197, ISO 10592, ABYC P21, P28	
Ignition Protected SAE J1171	Yes	

System components	Integra EPS™	Integra JS™
UIH - Tilt mount electronic helm	✓	✓
UJS - Integra JS joystick	-	✓
UGW-D - Digital Integra JS Gateway	-	✓
UGW-A - Analogic Integra JS Gateway	-	✓*
X82 - Adjustable steering wheel tilt mechanism	✓	✓
UID-5 - Veratron®-VDO® color display	✓	✓
BCM - Body Control Module – CAN Bus network module	✓	✓
UIP - High Power electro-hydraulic power unit	✓	✓
UIPC - Compact electro-hydraulic power unit	✓	✓
UC120E - Heavy duty starboard cylinder with integrated sensor	✓	✓
UC120EP - Heavy duty port cylinder with integrated sensor	✓	✓
UC120 - Heavy duty starboard hydraulic cylinder for multiple engine applications with tie bar	✓	✓
UC120P - Heavy duty port hydraulic cylinder for multiple engine applications with tie bar	✓	✓
Tie bar - Please refer to Integra tie bar section	✓	✓
KIT OB-SVS - High pressure Hydraulic hoses with pre crimped fittings	✓	✓
CAN Bus Truck cable - Can Bus power wires	✓	✓
CAN Bus Drop cable - Can Bus power wires	✓	✓
KBD3 - Purging kit with twin spiralled hoses and connectors (optional)	✓	✓
OL460 - 3 one litre hydraulic oil bottles (single bottle - 1A0043467V)	✓	✓

***Note:** Depending on the engines.

Integra EPS and Integra JS key benefits

- **Redundant electronic steering system**, a reliable way to reduce steering effort, tuning your driving and enhancing steering experience.
- **Powerful output, great efficiency and quickest response** in any situation, thanks to the brushless motor of the pump unit and to the electronic management
- **Extremely silent**
- **Low amperage system**
- Veratron® **colour display**
- **Customizable driving mode:** the user can choose between Autocruise and Autosport driving mode
- **Autopilot direct interface: Garmin®** Reactor™ 40 Steer-by-wire, **Raymarine®** EV-2 SBW**, Furuno®** Navipilot 300**, Simrad®** AP44 e AP48 con NAC-D
- **Easy installation**, thanks to the simplified configuration and the CAN bus connectionn system.
- **Customizable wheel effort.**
- Wheel effort is programmed to change with engine RPM.
- **Tilt range of 48° and 5 locking positions,** thanks to the **X82** tilt mechanims
- **Easy boat handling,** thanks to the adjustable speed sensitive turns lock to lock
- **The pump unit** is available in **2 versions** to choose from, based on the selected application: **UIP** (High Power electro-hydraulic power unit) and **UIPC** (Compact electro-hydraulic power unit) and **can be positioned anywhere** on the boat
- It's possible to have a no tie-bar configuration, using two motor pump units
- **Automatic Power Selector** to ensure optimal voltage
- Designed for single, dual, triple or quad outboard engines
- Available for double steering stations applications
- It can handle up to 4 engines with a single power unit
- Heavy duty steering cylinder with embedded CAN bus position sensor

Integra JS additional functionalities

- **Integra JS** adds to Integra EPS functionalities a new level of manoeuvrability, thanks to the Joystick technology
- **Integra JS** is a more intuitive way of driving. Designed for **low speed manoeuvring**, the Joystick grants precision and driving comfort and facilitates docking and trailer procedures as the boat can move **sideways, diagonally or spin on its own axis**
- **Integra JS** has intuitive operation and enables safe, precise and simple low-speed maneuverability
- **Integra JS Joystick** includes several functions: **Boost** function used to momentarily increase engine rpm if you need instant thrust, **Trim** function for adjusting motor feet, **Heading** function, that gives the ability to maintain the set course, **Anchor** function, to maintain boat position via GPS connection and **MainStay** the combination of the previous functions (**Heading and Anchor**). **Anchor, Heading** and **MainStay** functions needs the presence of **Veratron® Nav Sensor** - 3C0020201Z, **GPS24XD NMEA 2000 Garmin® or Hempisphere Vector V200 GNSS Smart.**



Caution: This catalog is for informational purposes only. For proper installation, refer to the manuals for the individual components.

Integra™
Outboard electronic power steering systems

UIH1 - Electronic helm

- Electronic steering helm tilt mount **X82** -43817N
- Easy to install, no oil or hydraulic hoses

UIH1 - 1A0043536M - main station electronic helm.
UIH2 - 1A0043537P - second station electronic helm

- Resistant to harsh marine conditions
- Steering wheel turns can be set by the user.
- Variable steering wheel resistance according to boat speed
- Instant responsiveness
- Redundant architecture with 2 CAN bus channels



UIH1



X82

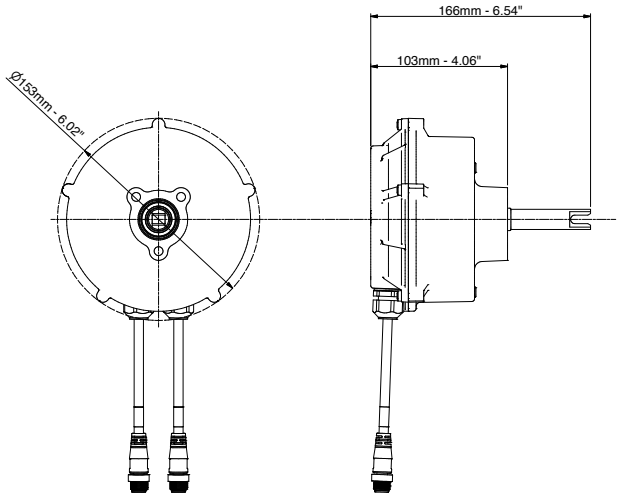

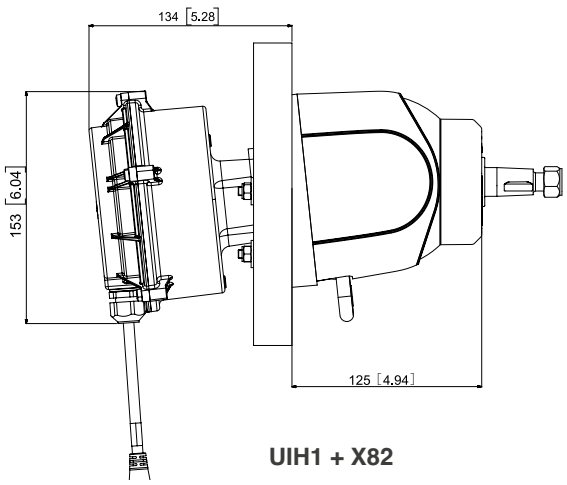

UIH1 + X82

UJS Integra joystick

- Power: turning on the station
- **BOOST** switch on the handle: momentarily increases engine rpm if you need instant thrust, it is active as long as the switch is pressed
- Signal lights: indicate if the joystick is in Neutral or the set direction
- **Heading**: ability to maintain the set course
- **UP and Down** trim keys: to be connected to the engine's trims when compatible
- **Anchor** function allows boat position to be maintained via GPS connection
- **MainStay** function is activated by pressing the **Heading** and **Anchor** buttons
  Anchor, Heading and MainStay function requires **Veratron® Nav Sensor** - part number 3C0020201Z, **GPS24XD NMEA 2000 Garmin® or Hempisphere Vector V200 GNSS Smart.**
- CAN Bus communication via 2 DeviceNet® connectors.



UJS

UJS1	1A0043922T	Integra JS joystick first station
UJS2	1A0044078N	Integra JS joystick second station

UJS - B Integra joystick with Bow Thruster

- Power: turning on the station
- **BOOST** switch on the handle: momentarily increases engine rpm if you need instant thrust, it is active as long as the switch is pressed
- Signal lights: indicate if the joystick is in Neutral or the set direction
- **Thruster**: turning the bow thruster on and off
- **Heading**: ability to maintain the set course
- UP and Down trim keys: to be connected to the boat's trims
- **Anchor** function allows boat position to be maintained via GPS connection
- **MainStay** function is activated by pressing three times the **Heading/Anchor** button
  Anchor, Heading and MainStay function requires **Veratron® Nav Sensor** - part number 3C0020201Z, **GPS24XD NMEA 2000 Garmin® or Hempisphere Vector V200 GNSS Smart.**
- CAN Bus communication via 2 DeviceNet® connectors.



UJS-B

UJS-B1	1A0044162B	Integra joystick first station with Bow Thruster
UJS-B2	1A0044163D	Integra joystick second station with Bow Thruster

BCM (Body Control Module) - Can Bus Network Module

- Waterproof CAN bus connection system
- Direct interface with Garmin®, Raymarine®, Simrad® and Furuno® autopilot
- Very compact dimensions



BCM

BCM	1A0043540C	Can Bus network module

Integra™
Outboard electronic power steering systems

UGW- Gateway

Device to control throttle and inverter in Honda, Suzuki and Selva outboard engines. It allows management of the trims directly from the joystick.

UGW- D Digital Gateway

UGW-D	1A0043934A	Digital Gateway
UGWD-U	1A0044083F	Harness for UGW-D digital gateway
UGWD-S1	1A0043991N	Harness for UGW-D digital gateway and Suzuki engines equipped with SPC1
UGWD-S2M	1A00000245	Harness for UGW-D digital gateway and Suzuki single engine equipped with SPC2
UGWD-S2	1A0043990L	Harness for UGW-D digital gateway and Suzuki engines equipped with SPC2



UGW-D

UGW- A Analogic Gateway

UGW-AH	1A0043985U	Analog Gateway for Honda engines
UGWA-HM	1A00000177	Harness analog gateway for single Honda engine
UGWA-H2	1A0044057E	Harness analog gateway for Honda engines
UGW-ASE	1A0044245F	Analog Gateway for Selva engines
UGWA-SEM	1A00000203.	Harness analog gateway for single Selva engine
UGWA-SE1	1A0044178T	Harness analog gateway for Selva engines
UGW-ASUR	1A0044247K	Analog Gateway and AMD Suzuki engines equipped with RAS
UGWA-SURM	1A00000227	Harness for analog gateway for AMD Suzuki single-engine equipped with RAS
UGWA-SUR2	1A0044164F	Harness for analog gateway for AMD Suzuki engines equipped with RAS



UGW-A

UID-5 - Veratron® color display

- Veratron® color Display - user adjustable brightness
- Customizable driving mode: the user can choose between Autocruise and Autosport driving mode
- Customizable wheel effort.
- Automatic wheel effort setting with engine RPM
- Multiple steering station applications
- Electronic anchor response level setting

UID-5	1A0044276T	Display Veratron®

Display visual information:

- Engine parameters: 1 to 4 engines
- Navigation parameters
- Electronic anchor parameters
- Bow thruster parameters
- Electronic compass
- Tiller angle
- Engines trim angle display
- Tank level
- Battery voltage



UID-5

UIP and UIPC - Power units

- 12 VDC brushless motor
- High power: very short lead times for maximum reactivity
- Embedded automatic power selector to manage the power supply from 2 batteries
- Can be installed anywhere on the boat
- 90° swiveling fittings for easy hose connection
- Tank: 1 litre (0.26 gal) UIP power unit; 0,3 litres (0.08 gal) UIPC power unit
- Vented cap
- Marine anodized aluminum body
- Include the main connector with 1m communication cables
- Ignition Protected SAE J1171



UIP



UIPC

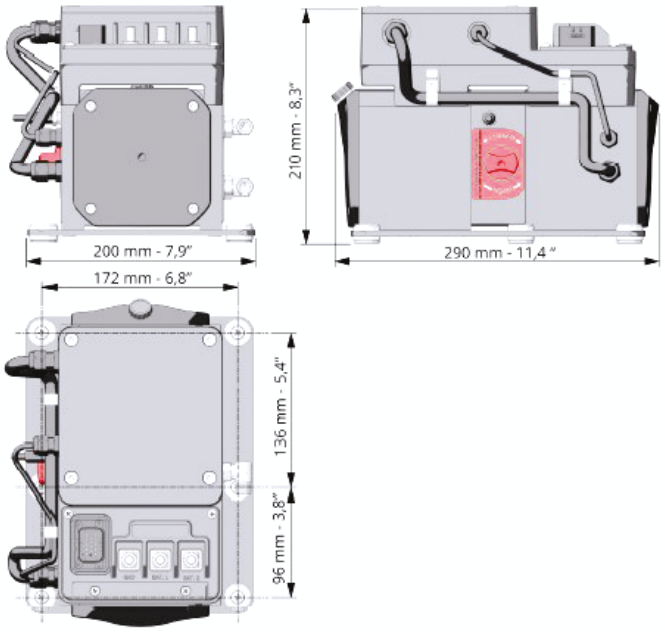

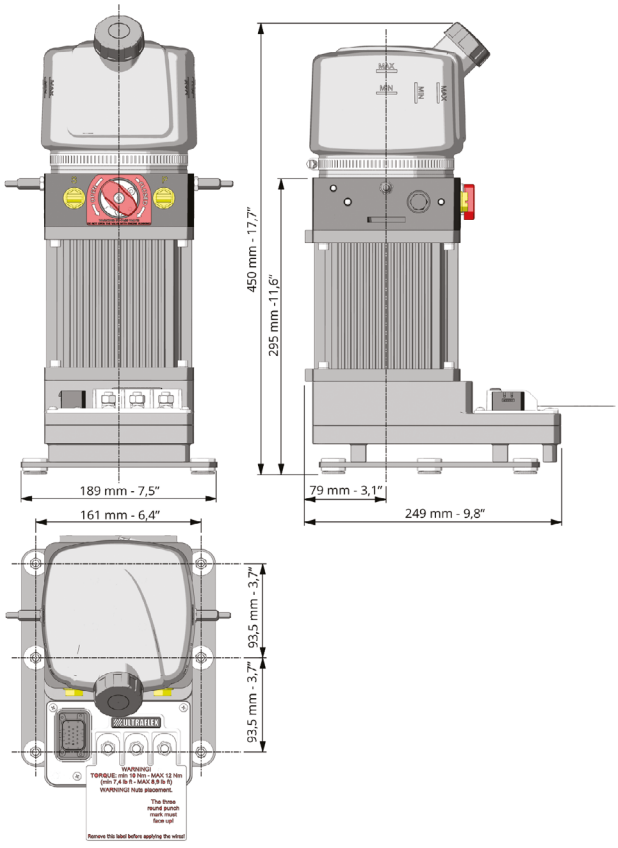

UIP	1A0043541E	High Power Power unit
UIPC	1A0043859N	Compact power unit

Integra™
Outboard electronic power steering systems

UC120E and UC120EP Cylinders



UC120E



UC120EP

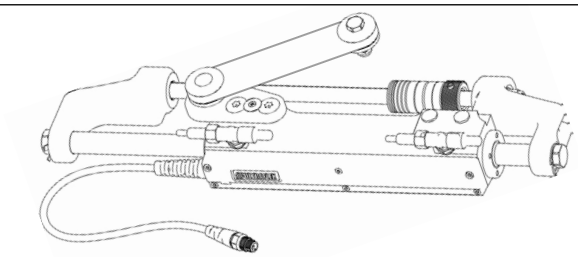

UC120E-OBF/1 - 1A0043322S

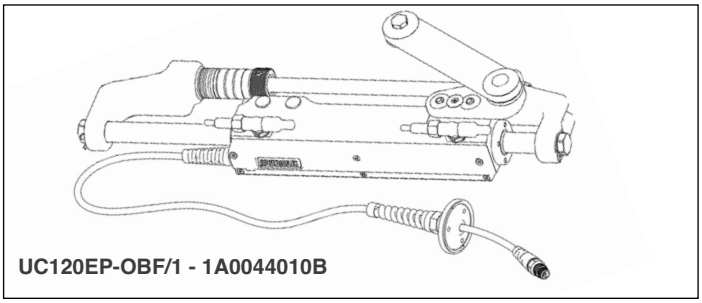

UC120EP-OBF/1 - 1A0044010B

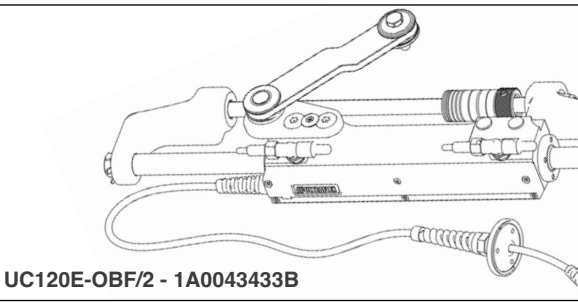

UC120E-OBF/2 - 1A0043433B

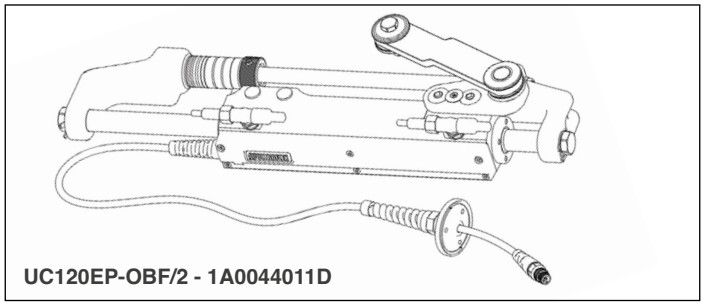

UC120EP-OBF/2 - 1A0044011D

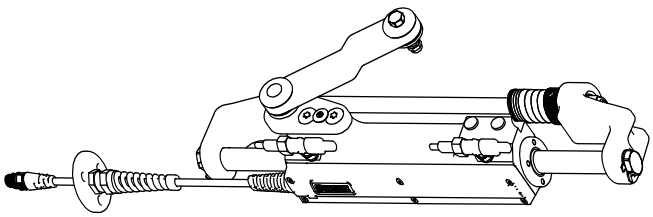

UC120E-OBF/4 - 1A00000093

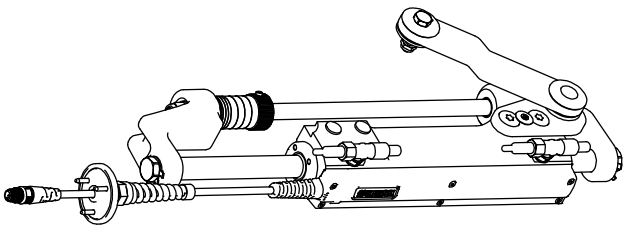

UC120EP-OBF/4 - 1A00000094

- **UC120E:** heavy-duty starboard cylinder with integrated sensor
- **UC120EP:** heavy-duty port cylinder with integrated sensor

Volume	120 cc - 7.5 cu. in
Output force	800 kg - 1764 lbs
Internal diameter	36.5 mm - 1.44”
Stroke	184 mm - 7.24”
Oil	OL460

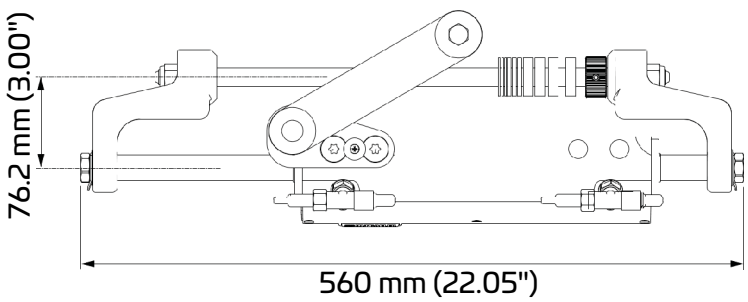

UC120 DIMENSIONS

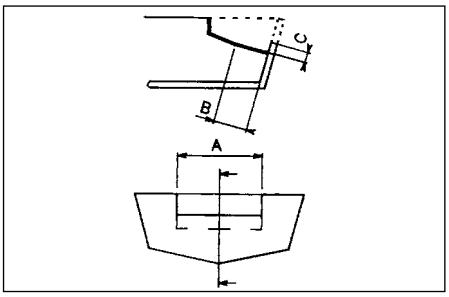

SPLASHWELL DIMENSION REQUIREMENTS			
Engine No.	A	B	C
1	560 mm - 22.05”	152 mm - 5.98”	152 mm - 5.98”
2	1110 mm - 43.70”	152 mm - 5.98”	152 mm - 5.98”

UC120E and UC120EP Cylinder application

ENGINE	MODEL	YEAR	CYLINDER STARBOARD	P. No.	CYLINDER PORT	P. No.
Mercury® Mariner®	115-125-150 EFI 2S	1990-2007	UC120E-OBF/1	1A0043322S	UC120EP-OBF/1	1A0044010B
	225-250 EFI 2S	2000-2007	UC120E-OBF/1	1A0043322S	UC120EP-OBF/1	1A0044010B
	135-150-175 OPTIMAX	1999-2018	UC120E-OBF/1	1A0043322S	UC120EP-OBF/1	1A0044010B
	200-225-250 OPTIMAX	1999-2018	UC120E-OBF/1	1A0043322S	UC120EP-OBF/1	1A0044010B
	RACING 300 OPTIMAX	1999-2011	UC120E-OBF/1	1A0043322S	UC120EP-OBF/1	1A0044010B
	250 SALTWATER EFI 4S	2007-2011	UC120E-OBF/1	1A0043322S	UC120EP-OBF/1	1A0044010B
	135-150-175-200 VERADO L4	2004-2012	UC120E-OBF/1	1A0043322S	UC120EP-OBF/1	1A0044010B
	FOURSTROKE 175-200 V6	2018-to date	UC120E-OBF/1	1A0043322S	UC120EP-OBF/1	1A0044010B
	FOURSTROKE 225-300 V8	2018-to date	UC120E-OBF/1	1A0043322S	UC120EP-OBF/1	1A0044010B
Yamaha®	150F-200F-250G 2S	1990-2008	UC120E-OBF/2	1A0043433B	UC120EP-OBF/2	1A0044011D
	150 HPDI VMAX 2S	1996-2007	UC120E-OBF/2	1A0043433B	UC120EP-OBF/2	1A0044011D
	175-200-225-250-300 HPDI VMAX 2S	2000-2008	UC120E-OBF/2	1A0043433B	UC120EP-OBF/2	1A0044011D
	F115-F150 EFI 4S	2000-2008	UC120E-OBF/1	1A0043322S	UC120EP-OBF/1	1A0044010B
	F200-F225-F250 4S	1999-2007	UC120E-OBF/2	1A0043433B	UC120EP-OBF/2	1A0044011D
	F115-F150-F175-F200 L4	2002-2007	UC120E-OBF/1	1A0043322S	UC120EP-OBF/1	1A0044010B
	F200-F225-F250-F300 V6 4S	2004-to date	UC120E-OBF/2	1A0043433B	UC120EP-OBF/2	1A0044011D
	F350 4S V8	2006-to date	UC120E-OBF/1	1A0043322S	UC120EP-OBF/1	1A0044010B
Honda®	BF135-BF150 4S	2005-to date	UC120E-OBF/1	1A0043322S	UC120EP-OBF/1	1A0044010B
	BF150 V-TEC 4S	2008-to date	UC120E-OBF/1	1A0043322S	UC120EP-OBF/1	1A0044010B
	BF175-BF200-BF225- BF250 4S	2001-to date	UC120E-OBF/1	1A0043322S	UC120EP-OBF/1	1A0044010B
	BF350					
Suzuki®	DF100-115-140 4S	2008-to date	UC120E-OBF/1	1A0043322S	UC120EP-OBF/1	1A0044010B
	DF150-175-DF200 L4 4S	2006-to date	UC120E-OBF/1	1A0043322S	UC120EP-OBF/1	1A0044010B
	DF200-DF225-DF250-DF300-DF350 V6 4S	2004-to date	UC120E-OBF/2	1A0043433B	UC120EP-OBF/2	1A0044011D
Tohatsu®	115-120-140 2S	2004-to date	UC120E-OBF/2	1A0043433B	UC120EP-OBF/2	1A0044011D
	70-90-115 TLDI 4S	2004-to date	UC120E-OBF/1	1A0043322S	UC120EP-OBF/1	1A0044010B
	BFT 115-150-200-225-250 4S	2014-to date	UC120E-OBF/1	1A0043322S	UC120EP-OBF/1	1A0044010B
	BFT60-75-90	2015-to date	UC120E-OBF/1	1A0043322S	UC120EP-OBF/1	1A0044010B
Selva®	80 PORTOFINO/TIGERSHARK 2S	1995-2008	UC120E-OBF/1	1A0043322S	UC120EP-OBF/1	1A0044010B
	150 WHITE SHARK 2S	2001-2007	UC120E-OBF/2	1A0043433B	UC120EP-OBF/2	1A0044011D
	100EFI MARLIN -115 EFI NARWHAL	2000-to date	UC120E-OBF/1	1A0043322S	UC120EP-OBF/1	1A0044010B
	225 BEAKED WHALE 4S	2019-to date	UC120E-OBF/2	1A0043433B	UC120EP-OBF/2	1A0044011D
	150EFI KILLER WHALE 4S - 200 SEI WHALE 4S	2000-to date	UC120E-OBF/1	1A0043322S	UC120EP-OBF/1	1A0044010B
Parsun®	D150 - D175 - D200		UC120E-OBF/2	1A0043433B	UC120EP-OBF/2	1A0044011D
	F115 EFI		UC120E-OBF/1	1A0043322S	UC120EP-OBF/1	1A0044010B
	F300		UC120E-OBF/2	1A0043433B	UC120EP-OBF/2	1A0044011D
OXE®	125-150-175-200HP DIESEL	2018-to date	UC120E-OBF/1	1A0043322S	UC120EP-OBF/1	1A0044010B
	300 HP DIESEL	2020-to date	UC120E-OBF/1	1A0043322S	UC120EP-OBF/1	1A0044010B
COX®	300 HP	2020-to date	UC120E-OBF/4	1A00000093	UC120EP-OBF/4	1A00000094

Integra™
Outboard electronic power steering systems

UC120 an UC120P Hydraulic cylinders

CE



UC120



UC120P

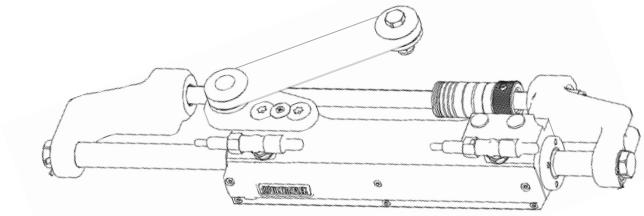

UC120-OBF/1 - 1A0044012F

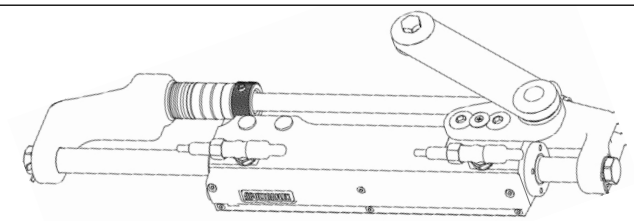

UC120P-OBF/1 - 1A0043434D

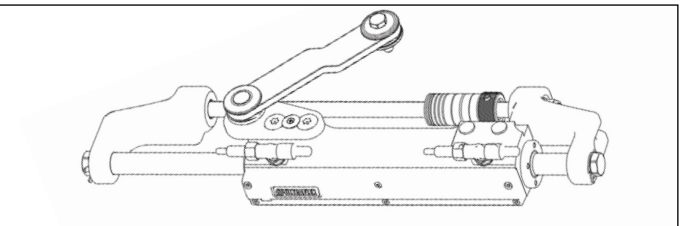

UC120-OBF/2 - 1A0044013H

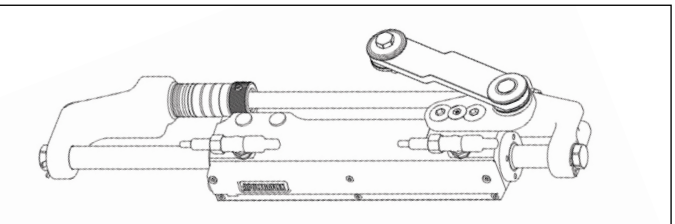

UC120P-OBF/2 - 1A0043435F

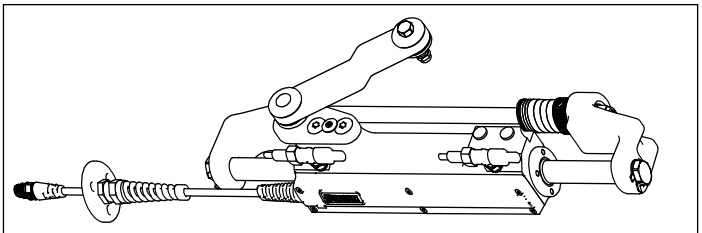

UC120E-OBF/4 - 1A00000095

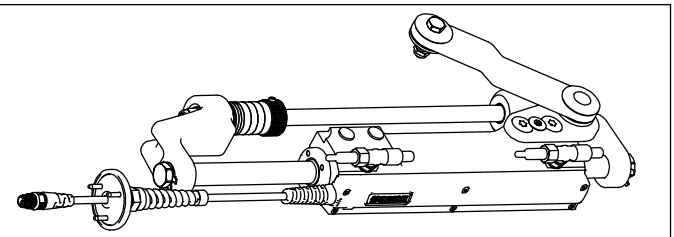

UC120EP-OBF/4 - 1A00000096

• **UC120:** heavy-duty starboard cylinder for two, three or four outboard engine applications with tie bar

• **UC120P:** heavy-duty port cylinder for two, three or four outboard engine applications with tie bar

Volume	120 cc - 7.5 cu. in
Output force	800 kg - 1764 lbs
Internal diameter	36.5 mm - 1.44”
Stroke	184 mm - 7.24”
Oil	OL460

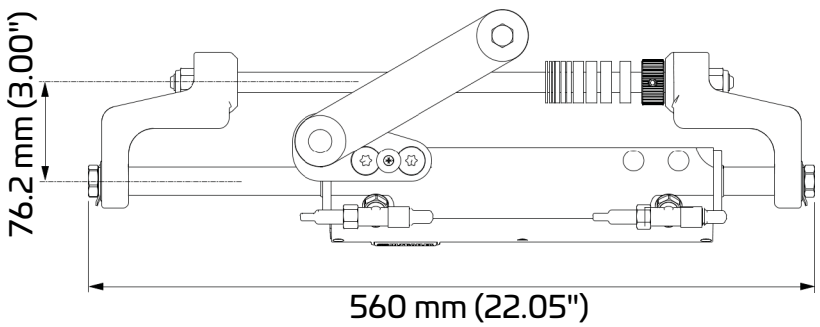

UC120 DIMENSIONS

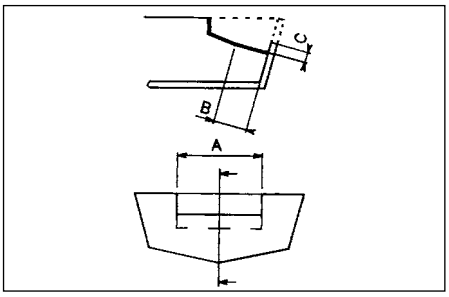

SPLASHWELL DIMENSION REQUIREMENTS			
Engine No.	A	B	C
1	560 mm - 22.05”	152 mm - 5.98”	152 mm - 5.98”
2	1110 mm - 43.70”	152 mm - 5.98”	152 mm - 5.98”

UC120 Cylinder applications

ENGINE	MODEL	YEAR	STARBOARD CYLINDER	P. No.	PORT CYLINDER	P. No.
Mercury® Mariner®	115-125-150 EFI 2S	1990-2007	UC120-OBF/1	1A0044012F	UC120P-OBF/1	1A0043434D
	225-250 EFI 2S	2000-2007	UC120-OBF/1	1A0044012F	UC120P-OBF/1	1A0043434D
	135-150-175 OPTIMAX	1999-2018	UC120-OBF/1	1A0044012F	UC120P-OBF/1	1A0043434D
	200-225-250 OPTIMAX	1999-2018	UC120-OBF/1	1A0044012F	UC120P-OBF/1	1A0043434D
	RACING 300 OPTIMAX	1999-2011	UC120-OBF/1	1A0044012F	UC120P-OBF/1	1A0043434D
	250 SALTWATER EFI 4S	2007-2011	UC120-OBF/1	1A0044012F	UC120P-OBF/1	1A0043434D
	135-150-175-200 VERADO L4	2004-2012	UC120-OBF/1	1A0044012F	UC120P-OBF/1	1A0043434D
	FOURSTROKE 175-200 V6	2018-to date	UC120-OBF/1	1A0044012F	UC120P-OBF/1	1A0043434D
	FOURSTROKE 225-300 V8	2018-to date	UC120-OBF/1	1A0044012F	UC120P-OBF/1	1A0043434D
Yamaha®	150F-200F-250G 2S	1990-2008	UC120-OBF/2	1A0044013H	UC120P-OBF/2	1A0043435F
	150 HPDI VMAX 2S	1996-2007	UC120-OBF/2	1A0044013H	UC120P-OBF/2	1A0043435F
	175-200-225-250-300 HPDI VMAX 2S	2000-2008	UC120-OBF/2	1A0044013H	UC120P-OBF/2	1A0043435F
	F115-F150 EFI 4S	2000-2008	UC120-OBF/1	1A0044012F	UC120P-OBF/1	1A0043434D
	F200-F225-F250 4S	1999-2007	UC120-OBF/2	1A0044013H	UC120P-OBF/2	1A0043435F
	F115-F150-F175-F200 L4	2002-2007	UC120-OBF/1	1A0044012F	UC120P-OBF/1	1A0043434D
	F200-F225-F250-F300 V6 4S	2004-to date	UC120-OBF/2	1A0044013H	UC120P-OBF/2	1A0043435F
	F350 4S V8	2006-to date	UC120-OBF/1	1A0044012F	UC120P-OBF/1	1A0043434D
Honda®	BF135-BF150 4S	2005-to date	UC120-OBF/1	1A0044012F	UC120P-OBF/1	1A0043434D
	BF150 V-TEC 4S	2008-to date	UC120-OBF/1	1A0044012F	UC120P-OBF/1	1A0043434D
	BF175-BF200-BF225- BF250 4S	2001-to date	UC120-OBF/1	1A0044012F	UC120P-OBF/1	1A0043434D
	BF350					
Suzuki®	DF100-115-140 4S	2008-to date	UC120-OBF/1	1A0044012F	UC120P-OBF/1	1A0043434D
	DF150-175-DF200 L4 4S	2006-to date	UC120-OBF/1	1A0044012F	UC120P-OBF/1	1A0043434D
	DF200-DF225-DF250-DF300-DF350 V6 4S	2004-to date	UC120-OBF/2	1A0044013H	UC120P-OBF/2	1A0043435F
Tohatsu®	115-120-140 2S	2004-to date	UC120-OBF/2	1A0044013H	UC120P-OBF/2	1A0043435F
	70-90-115 TLDI 4S	2004-to date	UC120-OBF/1	1A0043322S	UC120P-OBF/1	1A0043434D
	BFT 115-150-200-225-250 4S	2014-to date	UC120-OBF/1	1A0044012F	UC120P-OBF/1	1A0043434D
	BFT60-75-90	2015-to date	UC120-OBF/1	1A0044012F	UC120P-OBF/1	1A0043434D
Selva®	80 PORTOFINO/TIGERSHARK 2S	1995-2008	UC120-OBF/1	1A0044012F	UC120P-OBF/1	1A0043434D
	150 WHITE SHARK 2S	2001-2007	UC120-OBF/2	1A0044013H	UC120P-OBF/2	1A0043435F
	100EFI MARLIN -115 EFI NARWHAL	2000-to date	UC120-OBF/1	1A0044012F	UC120P-OBF/1	1A0043434D
	225 BEAKED WHALE 4S	2019-to date	UC120-OBF/2	1A0044013H	UC120P-OBF/2	1A0043435F
	150EFI KILLER WHALE 4S - 200 SEI WHALE 4S	2000-to date	UC120-OBF/1	1A0044012F	UC120P-OBF/1	1A0043434D
Parsun®	D150 - D175 - D200		UC120E-OBF/2	1A0043433B	UC120EP-OBF/2	1A0044011D
	F115 EFI		UC120E-OBF/1	1A0043322S	UC120EP-OBF/1	1A0044010B
	F300		UC120E-OBF/2	1A0043433B	UC120EP-OBF/2	1A0044011D
OXE®	125-150-175-200HP DIESEL	2018-to date	UC120-OBF/1	1A0044012F	UC120P-OBF/1	1A0043434D
	300 HP DIESEL	2020-to date	UC120-OBF/1	1A0044012F	UC120P-OBF/1	1A0043434D
COX®	300 HP	2020-to date	UC120-OBF/4	1A00000095	UC120P-OBF/4	1A00000096

Integra™
Tie bars

Tie bars suitable with INTEGRA electronic power steering systems only

A96-120 - Tie bar for twin outboard engine/single UC120E or UC120EP cylinder

Two different lengths available:
From 26” to 29”X engine center
From 29” to 34.5” engine center



A96 M/Y-120-29	1A0043471K	From 26” to 29” engine center - For Mercury®, Yamaha® and Selva® engines
A96 M/Y-120-34.5	1A0043472M	From 29” to 34.5” engine center - For Mercury®, Yamaha® and Selva® engines
A96 S/H-120-29	1A0043899B	From 26” to 29” engine center - For Suzuki®, Honda® and Tohatsu® engines
A96 S/H-120-34.5	1A0043900G	From 29” to 34.5” engine center - For Suzuki®, Honda® and Tohatsu® engines

A95-120 - Tie bar for twin outboard engine/dual UC120E and UC120P or UC120EP and UC120 cylinder

Two different lengths available:
From 26” to 32” engine center
From 32” to 37.5” engine center





A95 M/Y-120-32	1A0043437K	From 26” to 32” engine center - For For Mercury®, Yamaha® and Selva® engines
A95 M/Y-120-37.5	1A0043468X	From 32” to 37.5” engine center - For Mercury®, Yamaha® and Selva® engines
A95 S/H-120-32	1A0043903N	From 26” to 32” engine center - For Suzuki®, Honda® and Tohatsu® engines
A95 S/H-120-37.5	1A0043904R	From 32” to 37.5” engine center - For Suzuki®, Honda® and Tohatsu® engines

Tie bars suitable with INTEGRA electronic power steering systems only

Tie bar for Suzuki AMD and BMD engines





AS-GEN3-2	1A0043918C	Tie bar for Suzuki AMD engines twin-engine installation
AS-GEN3-3	1A0044113M	Tie bar for Suzuki AMD engines triple-engine installation

Suitable for applications with Suzuki GEN3 engines with integrated cylinder and Silversteer, Masterdrive and Integra systems

A97-120 - Tie bar for triple outboard engines/dual UC120E and UC120P cylinder

Two different lengths available:
From 26” to 30” engine center
From 30” to 35.5” engine center



A97 S/H-120



A97 M/Y-120

A97 M/Y-120-30	1A0043474S	From 26” to 30” engine center - For Mercury®, Yamaha® and Selva® engines
A97 M/Y-120-35.5	1A0043475U	From 30” to 35.5” engine center - For Mercury®, Yamaha® and Selva® engines
A97 S/H-120-30	1A0043907X	From 26” to 30” engine center - For Suzuki®, Honda® and Tohatsu® engines
A97 S/H-120-35.5	1A0043908Z	From 30” to 35.5” engine center - For Suzuki®, Honda® and Tohatsu® engines

A98-120 - Tie bar for quad outboard engines/dual UC120E and UC120P cylinder

From 26” to 32” engine center



A98 S/H-120



A98 M/Y-120

A98 M/Y-120	1A0043543J	From 26” to 32” engine center - For Mercury®, Yamaha® and Selva® engines
A98 S/H-120	1A0043910K	From 26” to 32” engine center - For Suzuki®, Honda® and Tohatsu® engines

Remote bypass valve for UIP and UIPC power units

LTB6 - 1A0044042R - Remote bypass valve



LTB6

OB-2C-SVS KIT : DUAL CYLINDER/DOUBLE ENGINE CONNECTION KIT FOR INTEGRA SYSTEMS WITH COUPLING BARS

Two high pressure Kevlar stranded flexible hoses with pre-crimped fittings and bend restrictors. Recommended for use with all UC120 Series cylinders.
Three lengths available: 70 cm (2.3'), 90 cm (2.95') and 120 cm (3.95').

KIT OB-2C-SVS	LENGTH	P. No.
KIT OB-2C-SVS-07	0,7 m - 2.30 ft	1A0041705Y
KIT OB-2C-SVS-09	0,9 m - 2.95 ft	1A0041706A
KIT OB-2C-SVS-12	1,20 m - 3.95 ft	1A0041707C



KIT OB-2C-SVS

Single engine, single cylinder

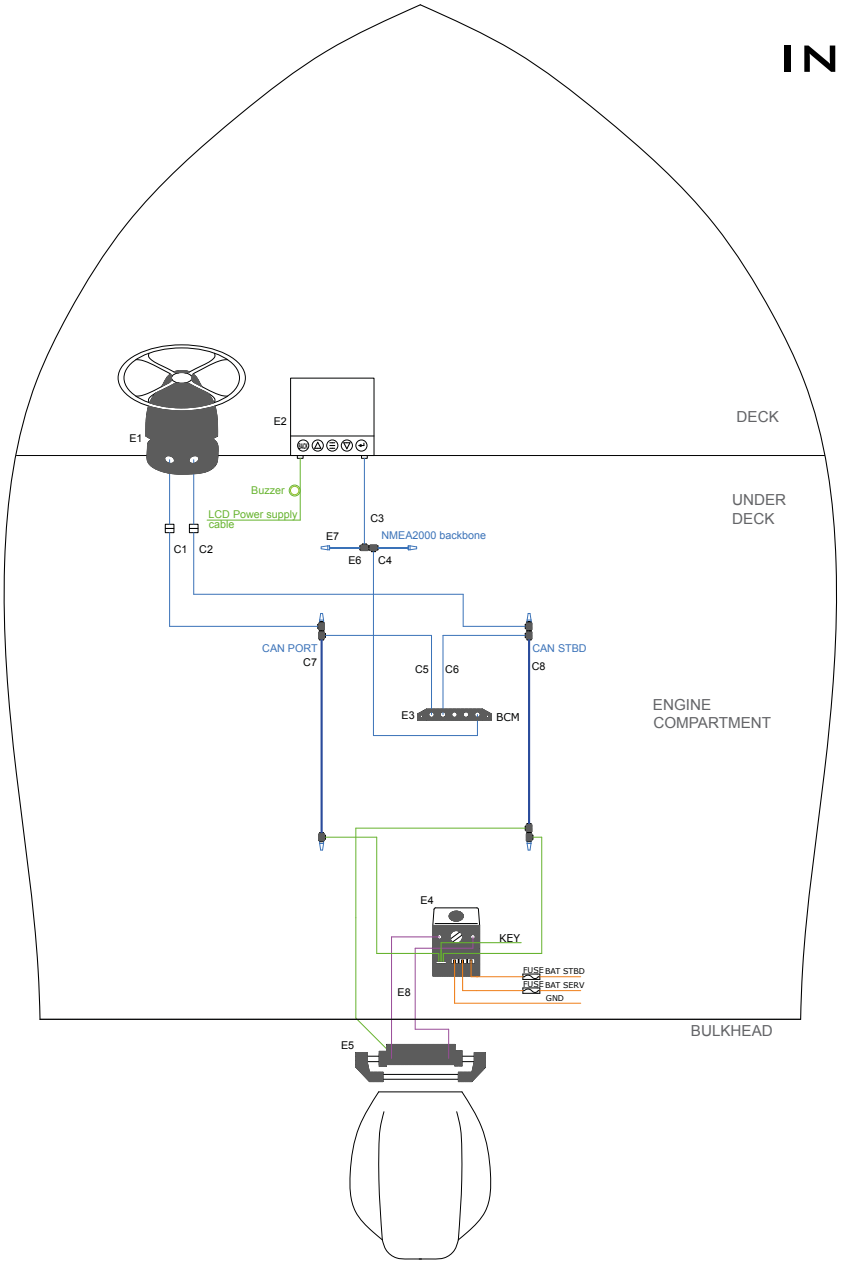

Main components

Name	Description	Quantity
E1	UIH1 Electronic helm - 1A0043536M	1
E1	X82 Tilt mechanism - 1A0043187N	1
E2	UID-5 - Veratron display - 1A0044276T	1
E3	BCM - Body control module - 1A0043540C	1
E4	UIPC compact power unit - 1A0043859N	1
E5	UC120E (or UC120EP) Cylinder with sensor included	1
E6	CAN bus - Tee connection - 1A0043578E	9
E7	CAN bus - Terminator pair - 1A0043576A	3
C1-C6	CAN-bus Drop cables - length on request	6
C7-C8	CAN-bus Trunk cables - length on request	2
E8	Hydraulic hoses kit - length on request	1

NOTE: This configuration is intended for illustrative purposes only. For specific references regarding installations with your own engines, please refer to the component installation manuals.

Integra™ EPS
Applications

Dual engine, single cylinder

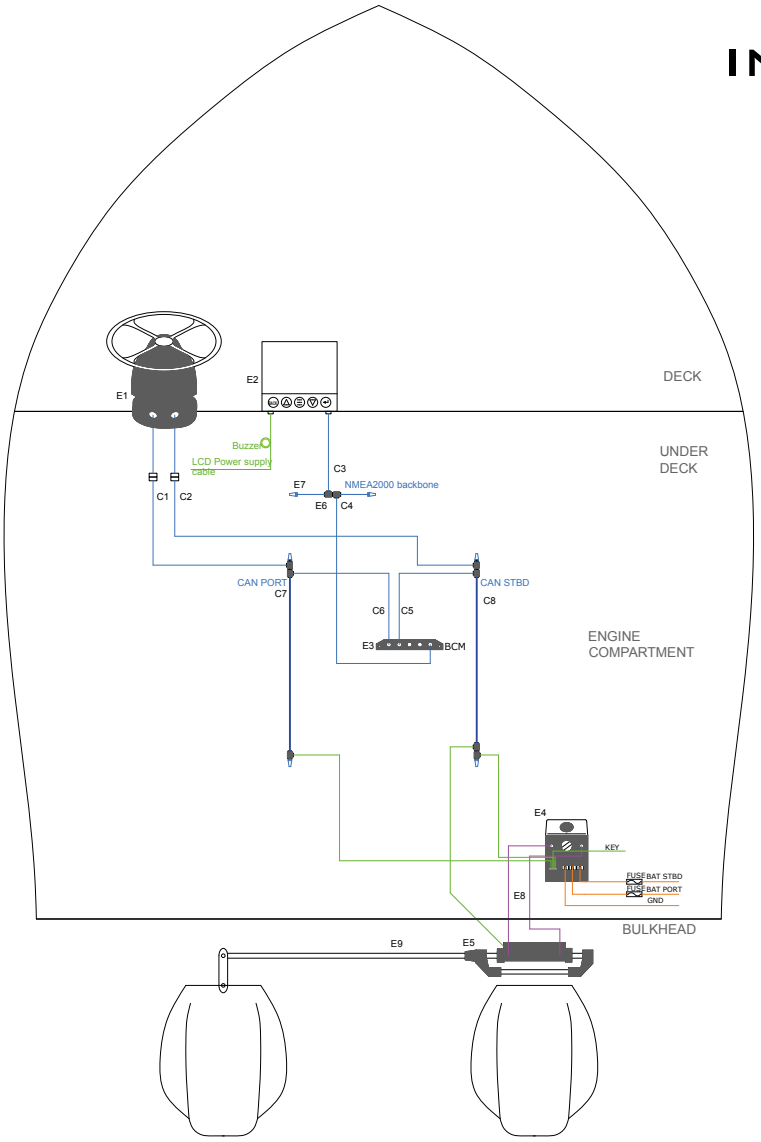

Main components

Name	Description	Quantity
E1	UIH1 Electronic helm - 1A0043536M	**1**
E1	X82 Tilt mechanism - 1A0043187N	**1**
E2	UID-5 - Veratron display - 1A0044276T	**1**
E3	BCM - Body control module - 1A0043540C	**1**
E4	UIP Power Unit - 1A0043541E or UIPC compact power unit - 1A0043859N	**1 or 1**
E5	UC120E (or UC120EP) Cylinder with integrated sensor	**1**
E6	CAN bus - Tee connection - 1A0043578E	**9**
E7	CAN bus - Terminator pair - 1A0043576A	**3**
E8	Kit OB-SVS: Hydraulic hoses kit - length on request	**1**
E9	A96-120 tie bar	**1**
C1-C6	CAN-bus Drop cables - length on request	**6**
C7-C8	CAN-bus Trunk cables - length on request	**2**

NOTE: This configuration is intended for illustrative purposes only. For specific references regarding installations with your own engines, please refer to the component installation manuals.

Dual engine, dual cylinder

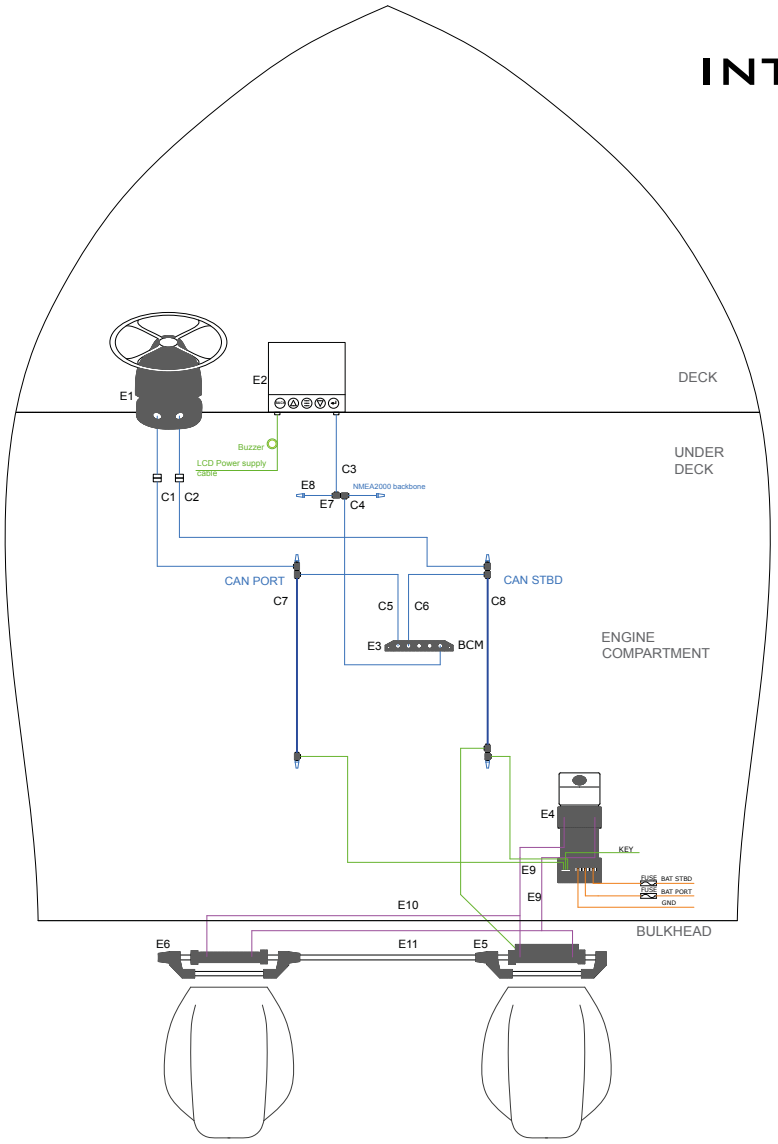

Main components

Name	Description	Quantity
E1	UIH1 Electronic helm - 1A0043536M	1
E1	X82 Tilt mechanism - 1A0043187N	1
E2	UID-5 - Veratron display - 1A0044276T	1
E3	BCM - Body control module - 1A0043540C	1
E4	UIP Power Unit - 1A0043541E	1
E5	UC120P (or UC120) Hydraulic cylinder	1
E6	CAN bus - Tee connection - 1A0043578E	9
E7	CAN bus - Terminator pair - 1A0043576A	3
E8	UC120E (or UC120EP) cylinder with integrated sensor	1
E9	Kit OB-SVS: Hydraulic hoses kit - length on request	1
E10	Kit OB-2C-SVSHydraulic hoses kit - length on request	1
E11	A95-120 tie bar- Port cylinder to starboard cylinder connection	1
C1-C6	CAN-bus Drop cables - length on request	6
C7-C8	CAN-bus Trunk cables - length on request	2

NOTE: This configuration is intended for illustrative purposes only. For specific references regarding installations with your own engines, please refer to the component installation manuals.

Integra™ EPS
Applications

Triple engine, dual cylinder

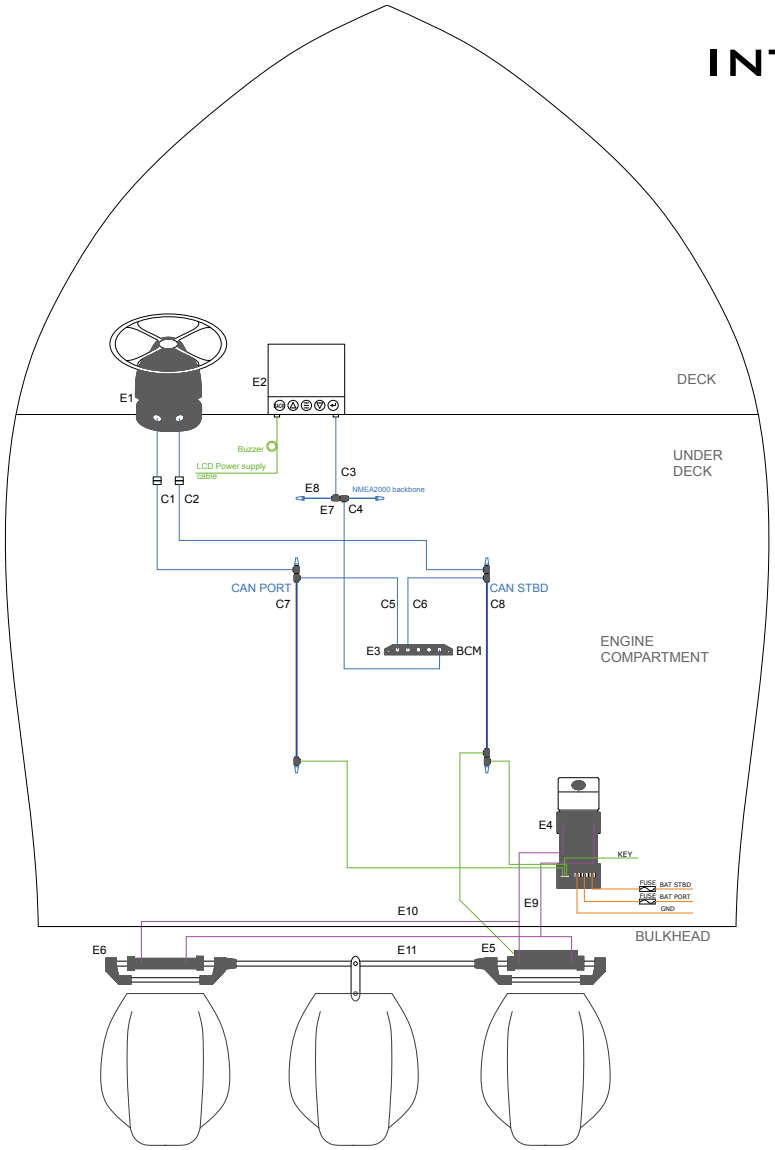

Main components

Name	Description	Quantity
E1	UIH1 Electronic helm - 1A0043536M	**1**
E1	X82 Tilt mechanism - 1A0043187N	**1**
E2	UID-5 - Veratron display - 1A0044276T	**1**
E3	BCM - Body control module - 1A0043540C	**1**
E4	UIP Power Unit - 1A0043541E	**1**
E5	UC120E (or UC120EP) Cylinder with integrated sensor	**1**
E6	CAN bus - Tee connection - 1A0043578E	**9**
E7	CAN bus - Terminator pair - 1A0043576A	**3**
E8	UC120P (or UC120) Hydraulic cylinder	**1**
E9	Kit OB-SVS: CAN-bus cables - length on request	**1**
E10	Kit OB-2C-SVS: CAN-bus cables - length on request	**1**
E11	A97-120 tie bar	**1**
C1-C6	CAN-bus Drop cables - length on request	**6**
C7-C8	CAN-bus Trunk cables - length on request	**2**

NOTE: This configuration is intended for illustrative purposes only. For specific references regarding installations with your own engines, please refer to the component installation manuals.

Quad engine, dual cylinder

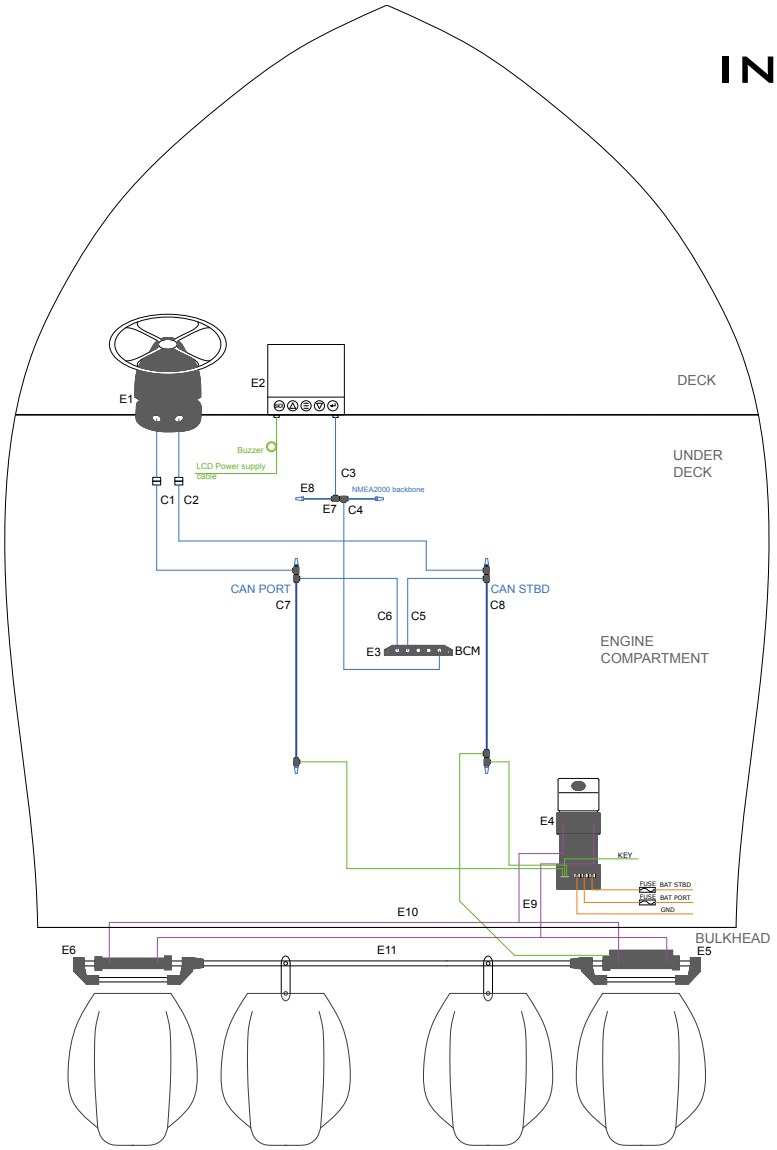

Main components

Name	Description	Quantity
E1	UIH1 Electronic helm - 1A0043536M	1
E1	X82 Tilt mechanism - 1A0043187N	1
E2	UID-5 - Veratron display - 1A0044276T	1
E3	BCM - Body control module - 1A0043540C	1
E4	UIP Power Unit - 1A0043541E	1
E5	UC120E (or UC120EP) Cylinder with integrated sensor	1
E6	UC120 (or UC120P) Hydraulic cylinder	1
E7	CAN bus - Tee connection - 1A0043578E	9
E8	CAN bus - Terminator pair - 1A0043576A	3
E9	KIT OB-SVS: Hydraulic hoses kit - length on request	1
E10	Kit OB-2C-SVS: Hydraulic hoses kit - length on request	1
E11	A98-120 tie bar	1
C1-C6	CAN-bus Drop cables - length on request	6
C7-C8	CAN-bus Trunk cables - length on request	2

NOTE: This configuration is intended for illustrative purposes only. For specific references regarding installations with your own engines, please refer to the component installation manuals.

Dual engine, dual cylinder, dual power unit

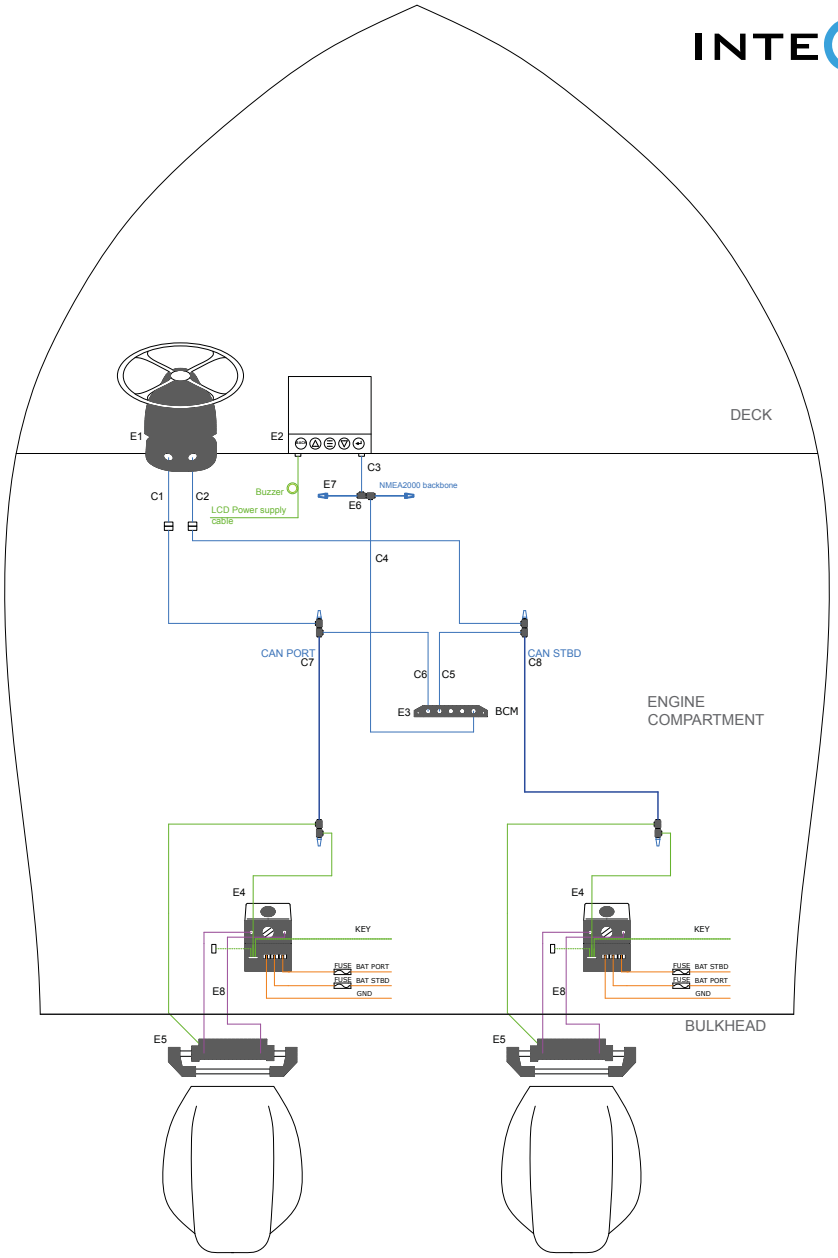

Main components

Name	Description	Quantity
E1	UIH1 Electronic helm - 1A0043536M	1
E1	X82 Tilt mechanism - 1A0043187N	1
E2	UID-5 - Veratron display - 1A0044276T	1
E3	BCM - Body control module - 1A0043540C	1
E4	UIPC compact power unit - 1A0043859N	2
E5	UC120E (or UC120EP) Cylinder with integrated sensor	2
E6	CAN bus - Tee connection - 1A0043578E	10
E7	CAN bus - Terminator pair - 1A0043576A	3
E8	Kit OB-SVS: CAN-bus cables - length on request	2
C1-C6	CAN-bus Drop cables - length on request	6
C7-C8	CAN-bus Trunk cables - length on request	2

NOTE: This configuration is intended for illustrative purposes only. For specific references regarding installations with your own engines, please refer to the component installation manuals.

Quad engine, dual cylinder, dual power unit

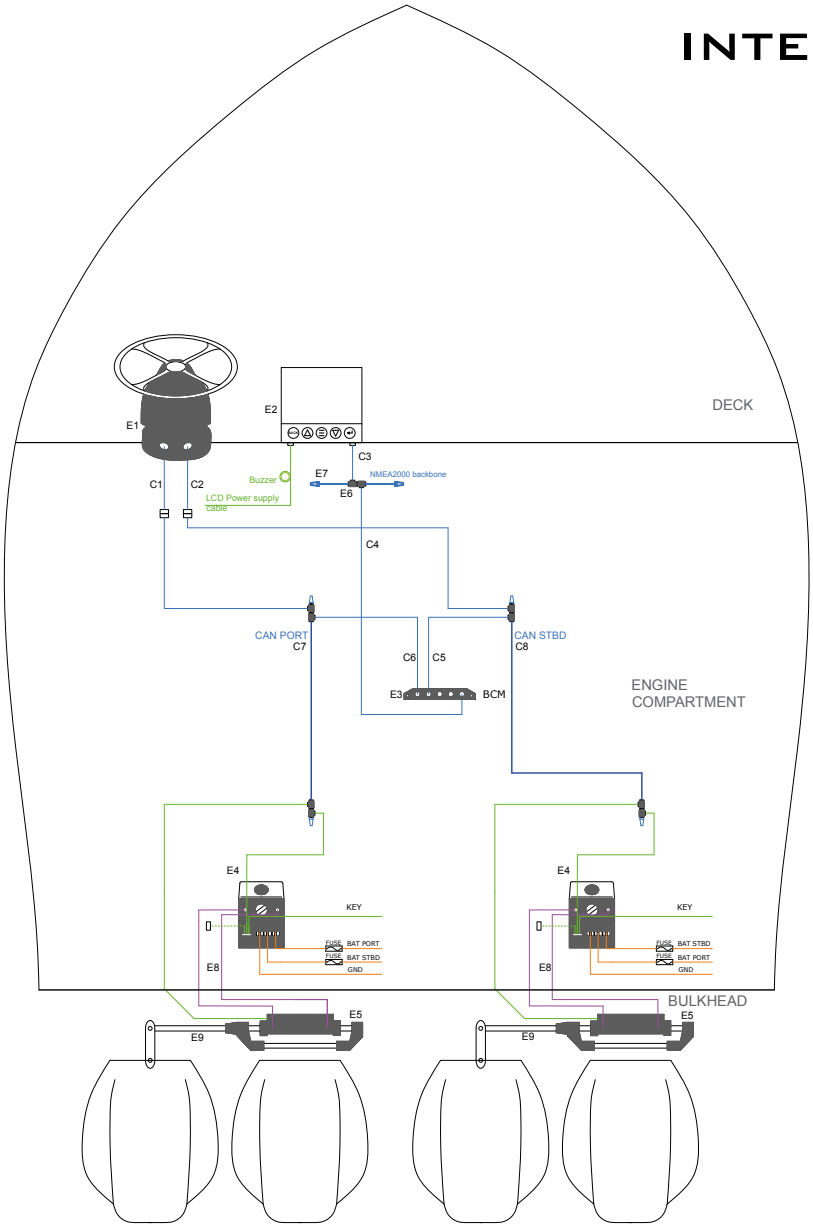

Main components

Name	Description	Quantity
E1	UIH1 Electronic helm - 1A0043536M	1
E1	X82 Tilt mechanism - 1A0043187N	1
E2	UID-5 - Veratron display - 1A0044276T	1
E3	BCM - Body control module - 1A0043540C	1
E4	UIP Power Unit - 1A0043541E or UIPC compact power unit - 1A0043859N	2
E5	UC120E (or UC120EP) Cylinder with integrated sensor	2
E6	CAN bus - Tee connection - 1A0043578E	10
E7	CAN bus - Terminator pair - 1A0043576A	3
E8	KIT OB-SVS: CAN-bus cables - length on request	2
E9	A96-120 tie bar	8
C1-C8	CAN-bus Drop cables - length on request	2
C7-C8	CAN-bus Trunk cables - length on request	2

NOTE: This configuration is intended for illustrative purposes only. For specific references regarding installations with your own engines, please refer to the component installation manuals.

Integra™ JS
Applications

Single engine, single cylinder, single power unit, with bow thruster

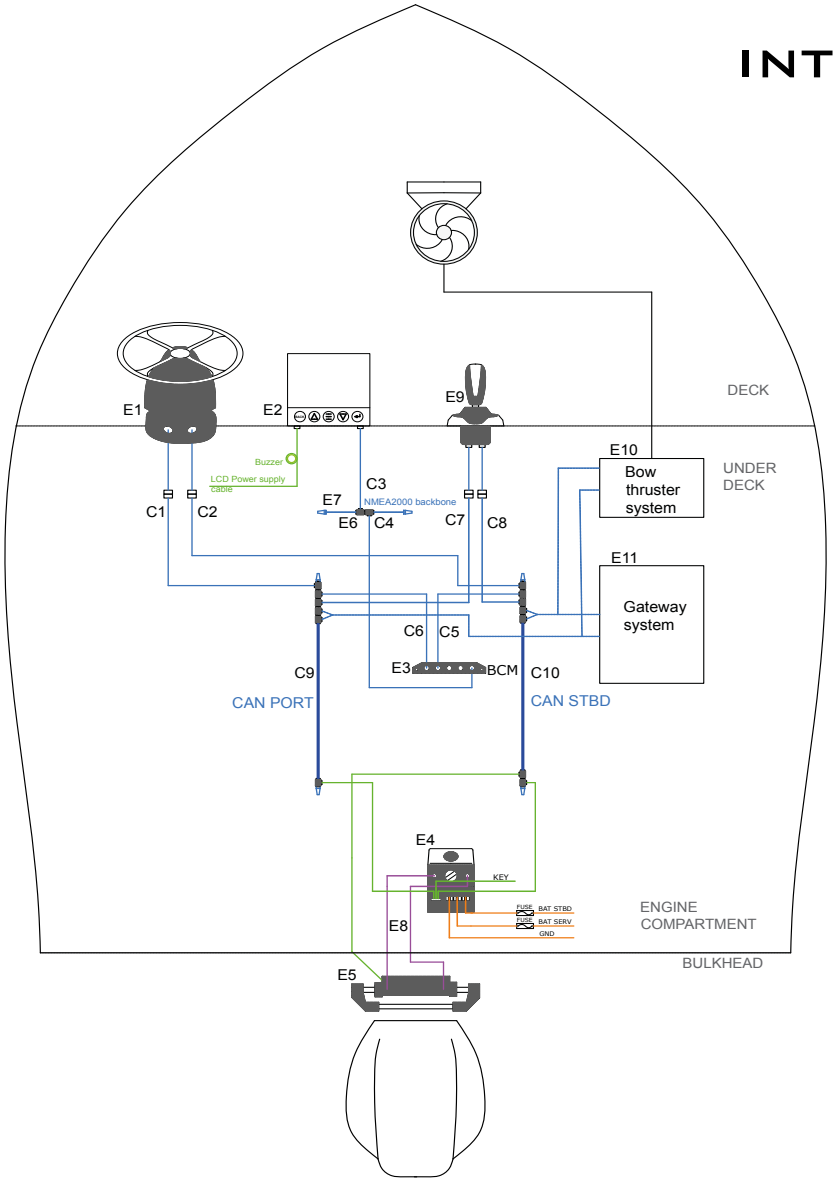

Main components

Name	Description	Quantity
E1	UIH1 Electronic helm - 1A0043536M	**1**
E1	X82 Tilt mechanism - 1A0043187N	**1**
E2	UID-5 - Veratron display - 1A0044276T	**1**
E3	BCM - Body control module - 1A0043540C	**1**
E4	UIPC compact power unit - 1A0043859N	**1**
E5	UC120E (or UC120EP) Cylinder with integrated sensor	**1**
E6	CAN bus - Tee connection - 1A0043578E	**11**
E7	CAN bus - Terminator pair - 1A0043576A	**3**
E8	Kit OB-SVS: CAN-bus cables - length on request	**1**
E9	UJS-B joystick	**1**
E10	Bow thruster system	**-**
E11	Gateway system	**-**
C1-C8	CAN-bus Drop cables - length on request	**8**
C9-C10	CAN-bus Trunk cables - length on request	**2**

NOTE: This configuration is intended for illustrative purposes only. For specific references regarding installations with your own engines, please refer to the component installation manuals.

Dual engine, dual cylinder, dual power unit

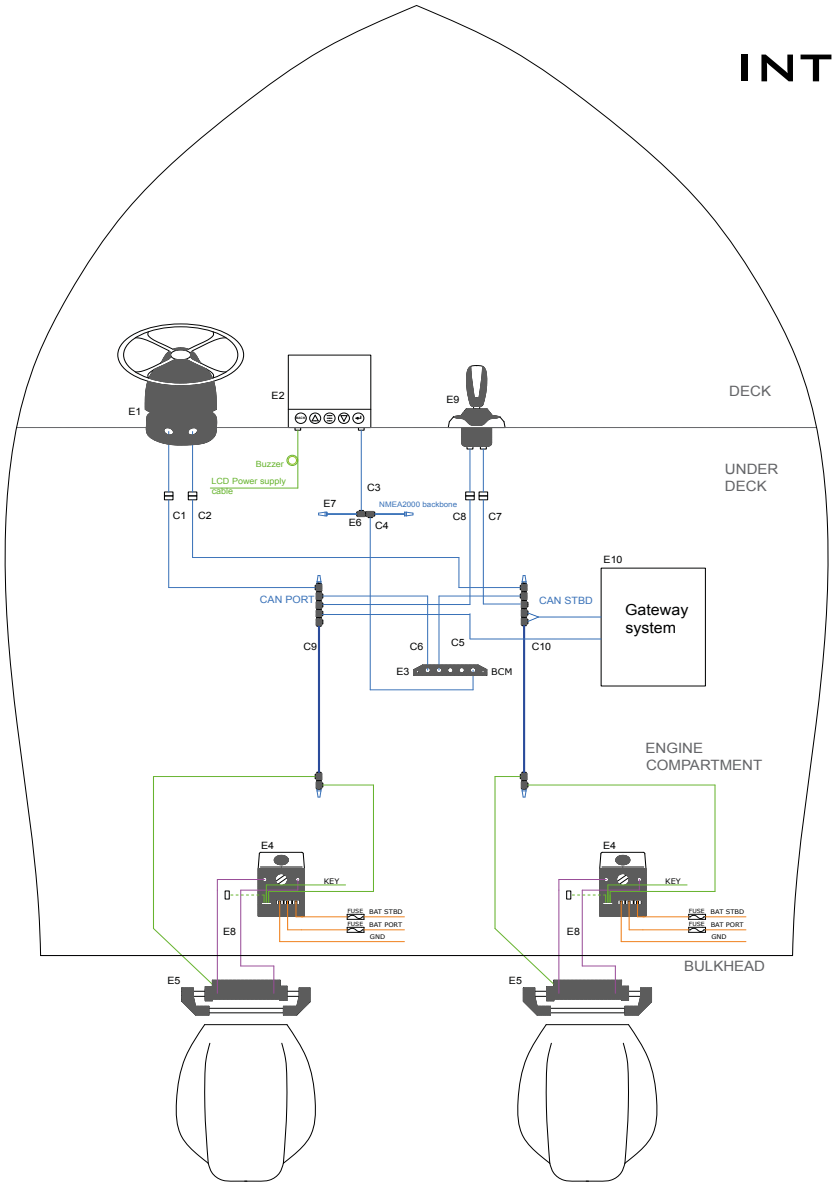

Main components

Name	Description	Quantity
E1	UIH1 Electronic helm - 1A0043536M	**1**
E1	X82 Tilt mechanism - 1A0043187N	**1**
E2	UID-5 - Veratron display - 1A0044276T	**1**
E3	BCM - Body control module - 1A0043540C	**1**
E4	UIP Power Unit - 1A0043541E or UIPC compact power unit - 1A0043859N	**2**
E5	UC120E (or UC120EP) Cylinder with integrated sensor	**2**
E6	CAN bus - Tee connection - 1A0043578E	**12**
E7	CAN bus - Terminator pair - 1A0043576A	**3**
E8	Kit OB-SVS: CAN-bus cables - length on request	**1**
E9	UJS-B joystick	**1**
E10	Gateway system	**-**
C1-C8	CAN-bus Drop cables - length on request	**8**
C9-C10	CAN-bus Trunk cables - length on request	**2**

NOTE: This configuration is intended for illustrative purposes only. For specific references regarding installations with your own engines, please refer to the component installation manuals.

Integra™ JS
Applications

Dual engine, dual cylinder, dual power unit, with bow thruster

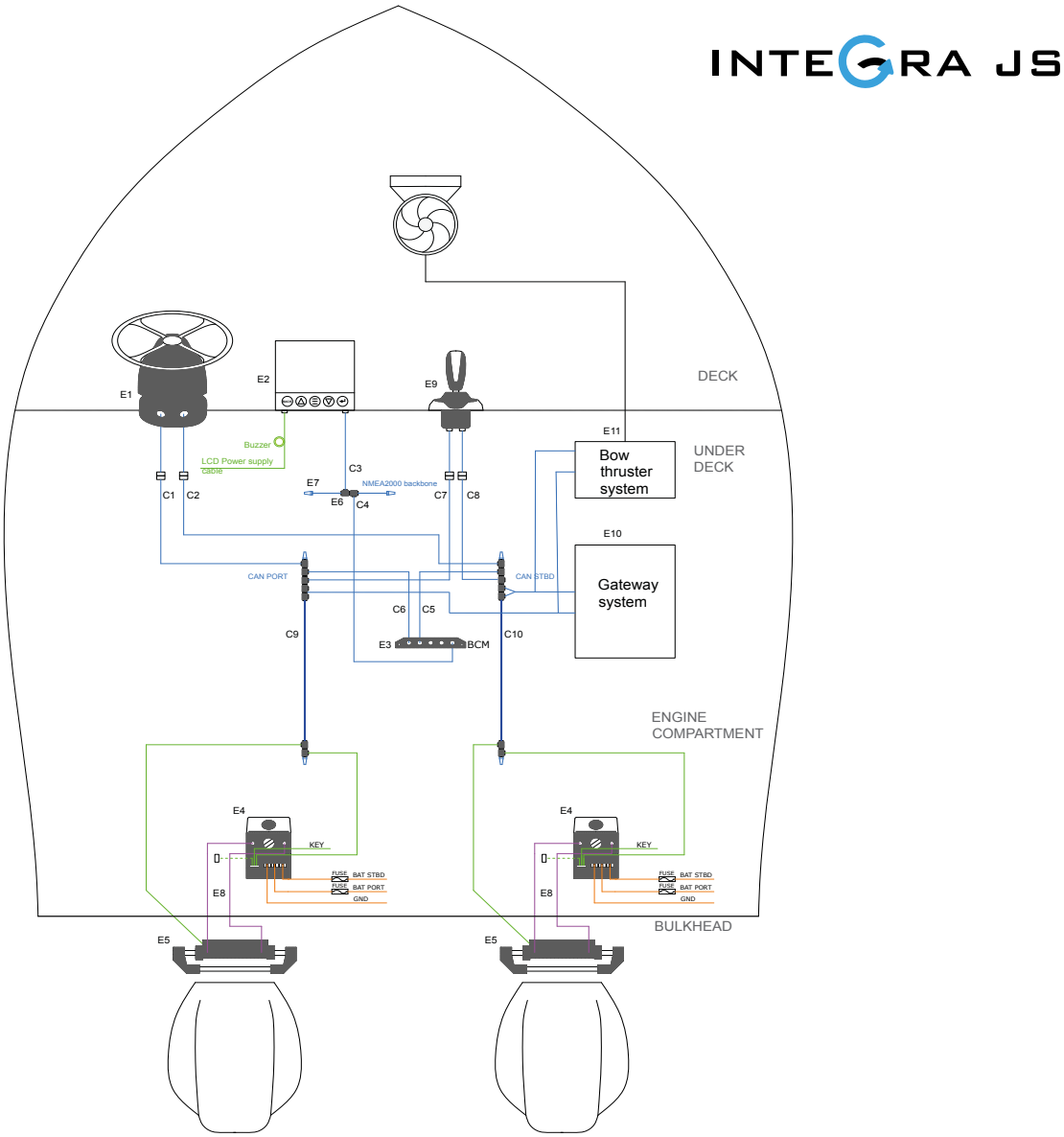

Main components

Name	Description	Quantity
E1	UIH1 Electronic helm - 1A0043536M	**1**
E1	X82 Tilt mechanism - 1A0043187N	**1**
E2	UID-5 - Veratron display - 1A0044276T	**1**
E3	BCM - Body control module - 1A0043540C	**1**
E4	UIPC compact power unit - 1A0043859N	**1**
E5	UC120E (or UC120EP) Cylinder with integrated sensor	**1**
E6	CAN bus - Tee connection - 1A0043578E	**12**
E7	CAN bus - Terminator pair - 1A0043576A	**3**
E8	Kit OB-SVS: CAN-bus cables - length on request	**2**
E9	UJS-B joystick	**1**
E10	Bow thruster system	**-**
E11	Gateway system	**-**
C1-C8	CAN-bus Drop cables - length on request	**8**
C9-C10	CAN-bus Trunk cables - length on request	**2**

NOTE: This configuration is intended for illustrative purposes only. For specific references regarding installations with your own engines, please refer to the component installation manuals.

Triple engine, dual cylinder, dual power unit

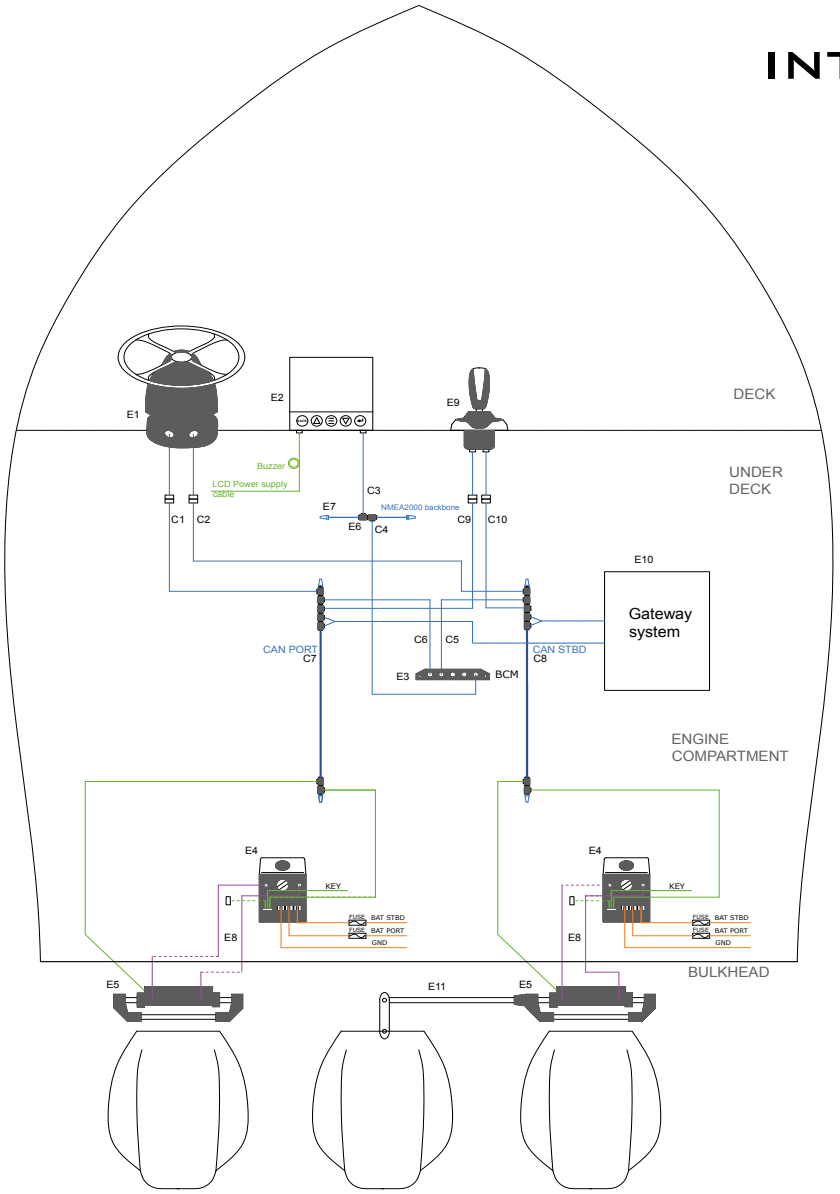

Main components

Name	Description	Quantity
E1	UIH1 Electronic helm - 1A0043536M	1
E1	X82 Tilt mechanism - 1A0043187N	1
E2	UID-5 - Veratron display - 1A0044276T	1
E3	BCM - Body control module - 1A0043540C	1
E4	UIP Power Unit - 1A0043541E or UIPC compact power unit - 1A0043859N	2
E5	UC120E (or UC120EP) Cylinder with integrated sensor	2
E6	CAN bus - Tee connection - 1A0043578E	12
E7	CAN bus - Terminator pair - 1A0043576A	3
E8	Kit OB-SVS: CAN-bus cables - length on request	1
E9	UJS-B joystick	1
E10	Gateway system	-
E11	A98-120 tie bar	-
C1-C8	CAN-bus Drop cables - length on request	8
C9-C10	CAN-bus Trunk cables - length on request	2

NOTE: This configuration is intended for illustrative purposes only. For specific references regarding installations with your own engines, please refer to the component installation manuals.

Integra™ JS
Applications

Quad engine, dual cylinder, dual power unit

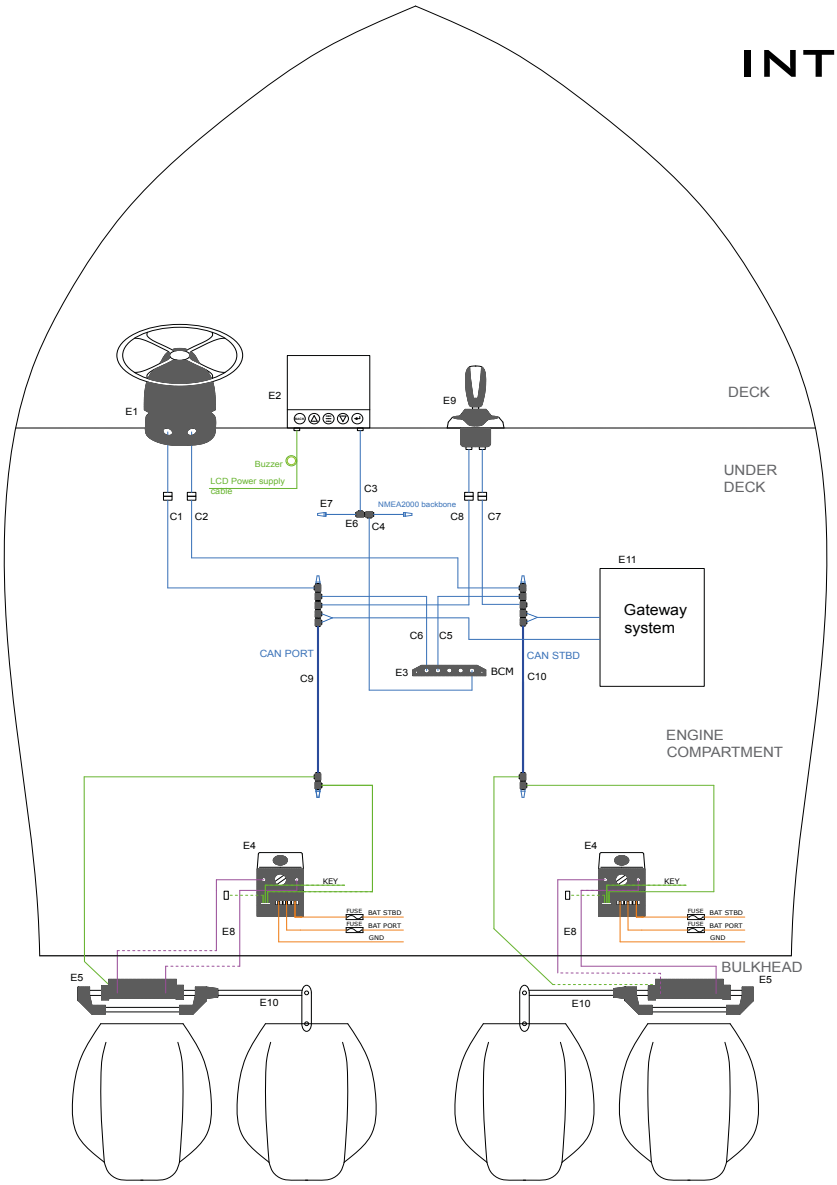

Main components

Name	Description	Quantity
E1	UIH1 Electronic helm - 1A0043536M	**1**
E1	X82 Tilt mechanism - 1A0043187N	**1**
E2	UID-5 - Veratron display - 1A0044276T	**1**
E3	BCM - Body control module - 1A0043540C	**1**
E4	UIP power unit - 1A0043541E	**2**
E5	UC120E (or UC120EP) Cylinder with integrated sensor	**2**
E6	CAN bus - Tee connection - 1A0043578E	**12**
E7	CAN bus - Terminator pair - 1A0043576A	**3**
E8	Kit OB-SVS: CAN-bus cables - length on request	**2**
E9	UJS-B joystick	**1**
E10	A98-120 tie bar	**2**
E11	Gateway system	**-**
C1-C8	CAN-bus Drop cables - length on request	**8**
C9-C10	CAN-bus Trunk cables - length on request	**2**

NOTE: This configuration is intended for illustrative purposes only. For specific references regarding installations with your own engines, please refer to the component installation manuals.

Quad engine, quad cylinder, dual power unit

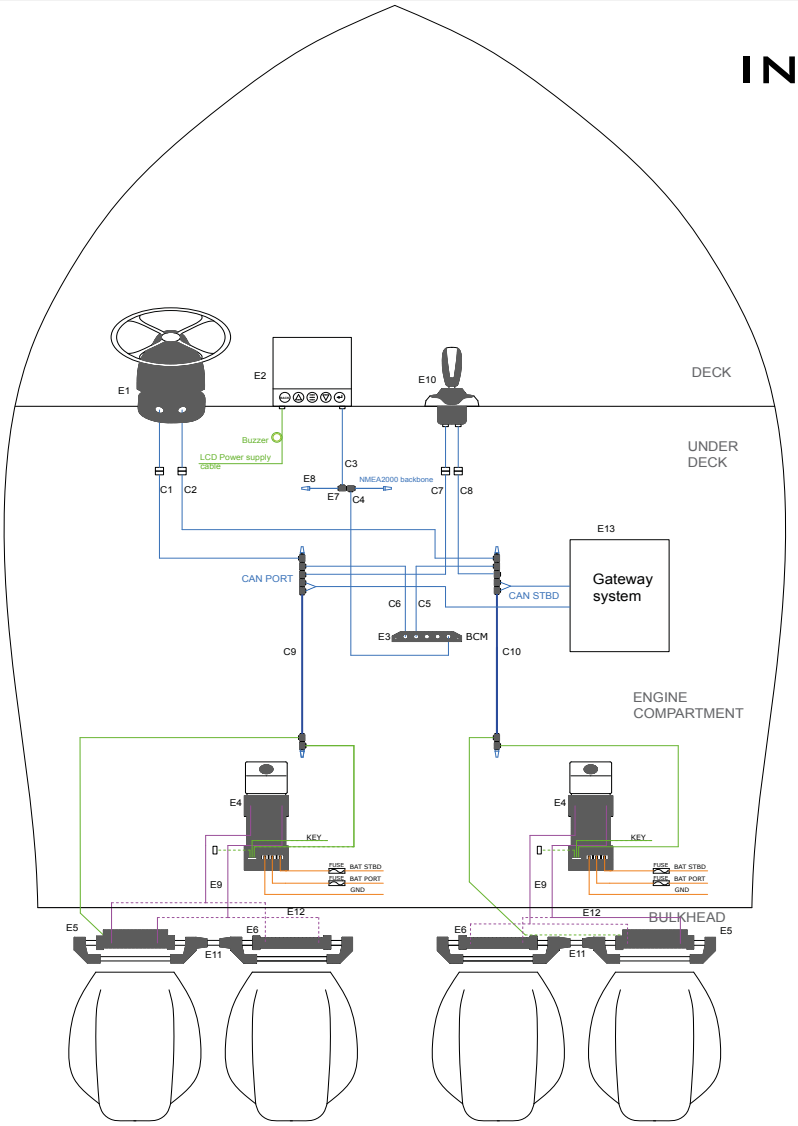

Main components

Name	Description	Quantity
E1	UIH1 Electronic helm - 1A0043536M	1
E1	X82 Tilt mechanism - 1A0043187N	1
E2	UID-5 - Veratron display - 1A0044276T	1
E3	BCM - Body control module - 1A0043540C	1
E4	UIP power unit - 1A0043541E	2
E5	UC120E (or UC120EP) Cylinder with integrated sensor	2
E6	UC120 (or UC120P) Hydraulic cylinder	2
E7	CAN bus - Tee connection - 1A0043578E	12
E8	CAN bus - Terminator pair - 1A0043576A	3
E9	Kit OB-SVS: CAN-bus cables - length on request	2
E10	UJS-B joystick	1
E11	A95-120 tie bar	2
E12	Kit OB-2C-SVS: CAN-bus cables - length on request	2
E13	Gateway system	-
C1-C8	CAN-bus Drop cables - length on request	8
C9-C10	CAN-bus Trunk cables - length on request	2

NOTE: This configuration is intended for illustrative purposes only. For specific references regarding installations with your own engines, please refer to the component installation manuals.

Integra™ equipped with UPA123
Outboard electronic power steering system

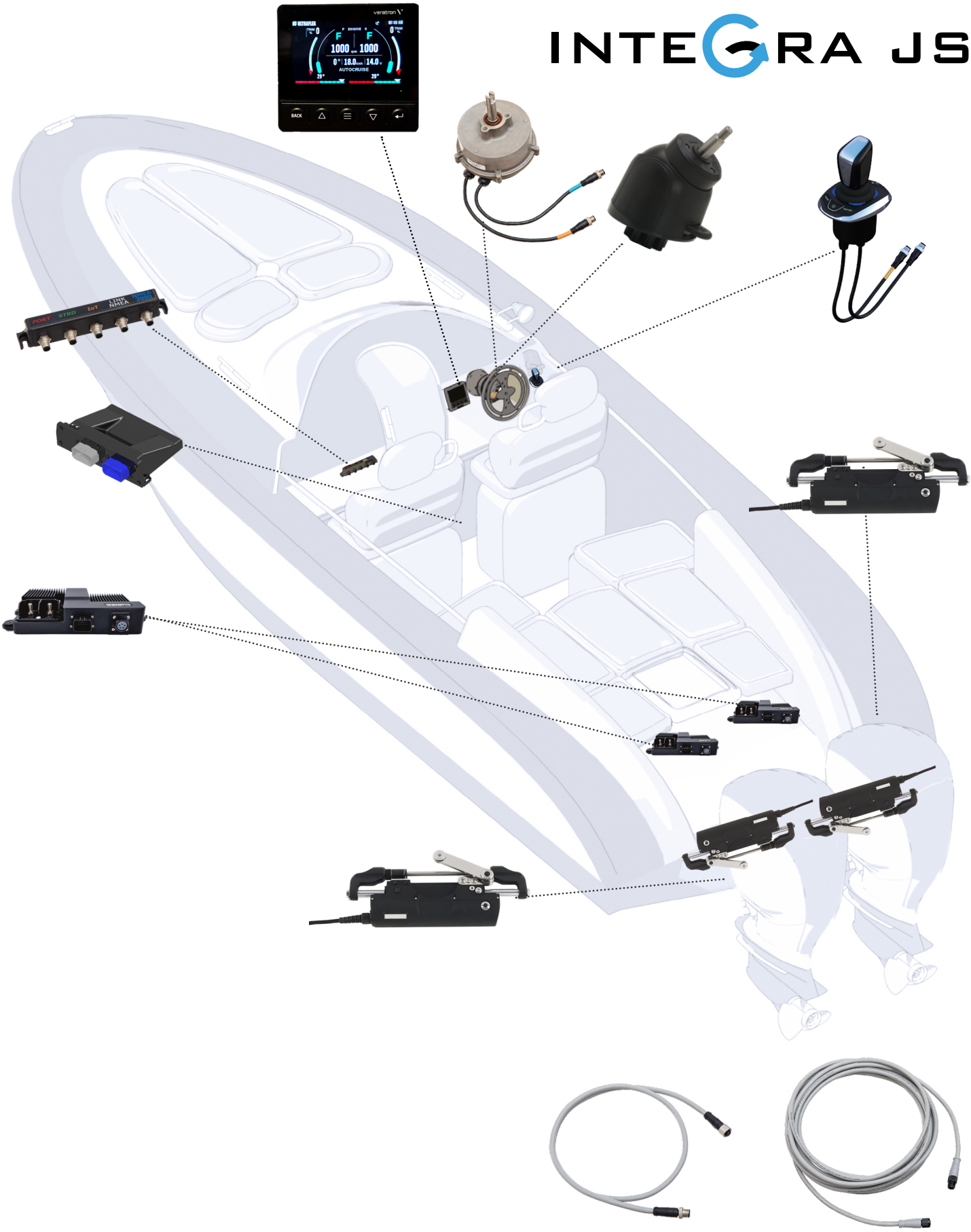

Integra™ equipped with UPA123
Outboard electronic power steering systems

System components

UIH	Tilt mount electronic helm
UJS	Integra JS joystick
UGW	Integra JS Gateway
X82	Adjustable steering wheel tilt mechanism
UID-5	Veratron® / VDO® colour display
BCM	Body Control Module -Can Bus network module
UPA123	Electronic power Starboard actuator
UPA123P	Electronic power port actuator
DC/DC Converter	Voltage converter for UP123 actuator
A96UPA	Tie bar for Integra with UPA123 steering systems
CANbus wires	Can bus power wires

NOTE: For more details, see the previous section, “Integra JS,” regarding the UIH, UJS, UGW, X82, UID, and BCM components.

Technical specifications

- Operating voltage: 12VDC
- Temperature range: -25°C/+77°C
- Outboard engine installations: single, dual, triple, quad
- Autopilot direct interface:
  - **Garmin®** Corepack Reactor 40 SBW
  - **Raymarine®** pack EV-2 SBW
  - **Furuno®** Navpilot 300
  - **Simrad®** Ap44 and Ap48 with NAC-D
- Customizable driving mode: Autocruise and Autosport
- Customizable wheel effort
- Compliance with rules: ISO 25197, ISO 10592, ABYC P21, P24, P27
- Ignition Protected SAE J1171

Caution: This catalog is for informational purposes only. For proper installation, refer to the manuals for the individual components.

Integra™ equipped with UPA123
Outboard electronic power steering systems

Integra EPS and Integra JS with UPA123 key benefits

- **Redundant electronic steering system**, a reliable way to reduce steering effort, tuning your driving and enhancing steering experience.
- P**lug & play system**
- **Absence of hydraulic hoses onboard . - no purging operations required**
- Virtually **maintenance free**
- **Integra JS** with **UPA123 is ready for use,** once installed
- **Reduced size wire**: can be easily connected and disconnected to/from the actuator, thanks its the specific connector
- **Integra JS** adds to Integra EPS functionalities a new level of manoeuvrability, thanks to the **Joystick technology**
- **Integra JS** is a more **intuitive way of driving.** Designed for **low speed manoeuvring**, the Joystick grants precision and driving comfort and **facilitates docking and trailer procedures** as the boat can move sideways, diagonally or spin on its own axis
- **Integra JS Joystick** includes several functions: **Boost** function used to momentarily increase engine rpm if you need instant thrust, **Heading** function, which gives the possibility to keep the direction of the bow set, **Anchor** function, to maintain boat position via GPS connection, **MainStay** the combination of the previous functions (**Heading** and **Anchor**). The **Heading** , **Anchor** and **MainStay** functions require the **Nav Sensor Veratron®** - 3C0020201Z, **GPS24XD NMEA 2000 Garmin®** o **Hempisphere Vector V200 GNSS Smart.**
- **Powerful output, great efficiency and quickest response** in any situation, thanks to the brushless motor of the pump unit and to the electronic management
- **Extremely silent**
- **Low amperage system**
- Veratron® **colour display**
- **Customizable driving mode:** the user can choose between Autocruise and Autosport driving mode
- **Autopilot direct interface: Garmin®** Reactor™ 40 Steer-by-wire, **Raymarine®** EV-2 SBW**, Furuno®** Navipilot 300**, Simrad®** Ap44 and Ap48 with NAC-D
- **Easy installation**, thanks to the simplified configuration and the CAN bus connectionn system.
- **Customizable wheel effort.**
- Wheel effort is programmed to change with engine RPM.
- **Tilt range of 48° and 5 locking positions,** thanks to the **X82** tilt mechanims
- **Easy boat handling:** adjustable speed sensitive turns lock to lock
- Designed for single, dual, triple or quad outboard engines
- Available for multiple steering stations applications



UPA123 - Electronic power actuator

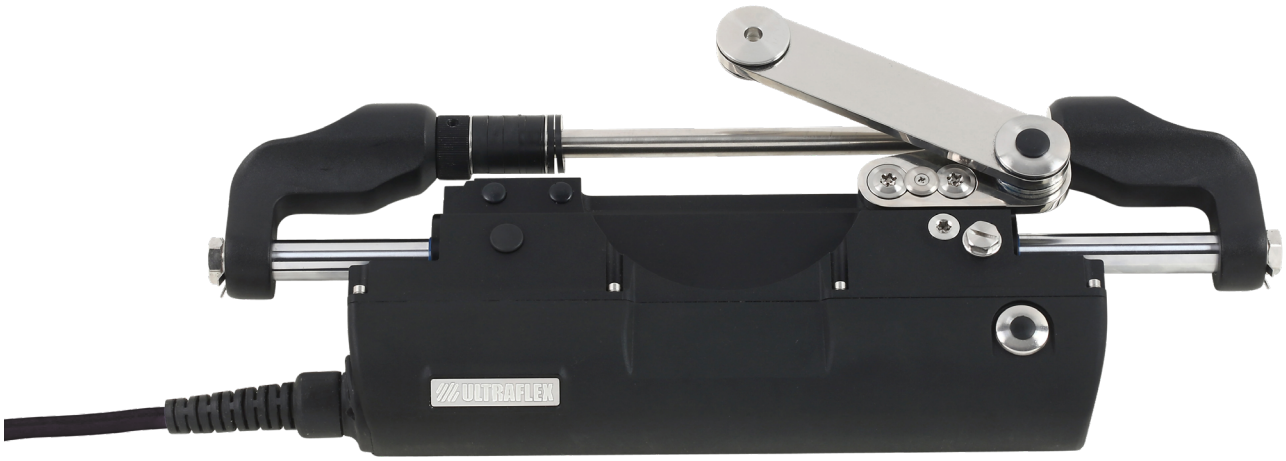

UPA123P

- **Plug & play system**
- **Absence of hydraulic hoses onboard . - no purging operations required**
- **Virtually maintenance free**
- **Integra JS** with **UPA123 is ready for use,** once installed
- **Reduced size wire**: it can be easily connected and disconnected to/from the actuator, thanks to its specific connector

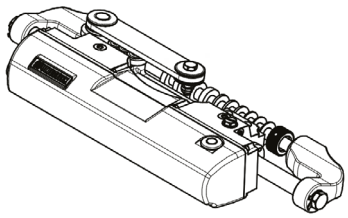

UPA123-OBF/1

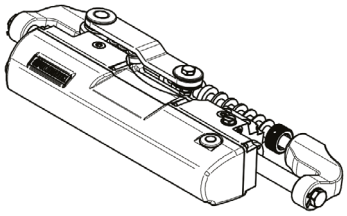

UPA123-OBF/2

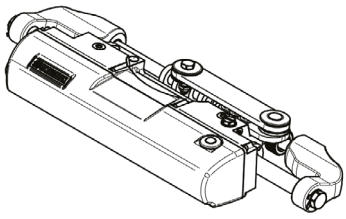

UPA123P-OBF/1

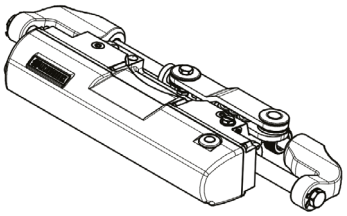

UPA123P-OBF/2

Model	Part n°	Description
UPA123-OBF/1	1A0044007N	Front mount electronic actuator, starboard version
UPA123-OBF/2	1A0044009T	Front mount electronic actuator, starboard version
UPA123P-OBF/1	1A0043851W	Front mount electronic actuator, port version
UPA123P-OBF/2	1A0044008R	Front mount electronic actuator, port version

Max load	700 kg (1555 lbs)
Stroke	184 mm (7.24”)
Nominal voltage with DCDC converter	12VDC
MAX tension	55A

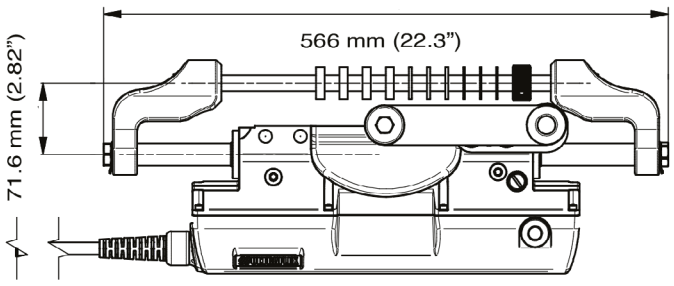

UPA123 - DIMENSIONS

Integra™ equipped with UPA123
Outboard electronic power steering systems

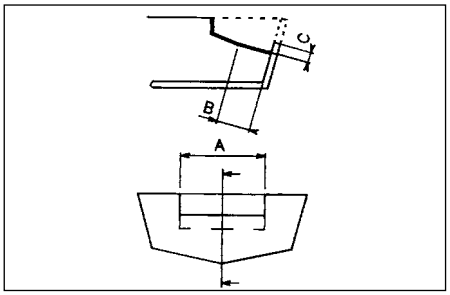

SPLASHWELL DIMENSION REQUIREMENTS			
Engine No.	A	B	C
1	560 mm - 22.05”	152 mm - 5.98”	152 mm - 5.98”
2	1110 mm - 43.70”	152 mm - 5.98”	152 mm - 5.98”

UPA123 electronic actuator applications

ENGINE	MODEL	YEAR	ACTUATOR STARBOARD	P. No.	ACTUATOR PORT	P. No.
Mercury® Mariner®	115-125-150 EFI 2S 225-250 EFI 2S 135-150-175 OPTIMAX 200-225-250 OPTIMAX RACING 300 OPTIMAX 250 SALTWATER EFI 4S 135-150-175-200 VERADO L4 FOURSTROKE 175-200 V6 FOURSTROKE 225-300 V8	1990-2007 2000-2007 1999-2018 1999-2018 1999-2011 2007-2011 2004-2012 2018-to date 2018-to date	UPA123-OBF/1 UPA123-OBF/1 UPA123-OBF/1 UPA123-OBF/1 UPA123-OBF/1 UPA123-OBF/1 UPA123-OBF/1 UPA123-OBF/1 UPA123-OBF/1	1A0044007N 1A0044007N 1A0044007N 1A0044007N 1A0044007N 1A0044007N 1A0044007N 1A0044007N 1A0044007N	UPA123P-OBF/1 UPA123P-OBF/1 UPA123P-OBF/1 UPA123P-OBF/1 UPA123P-OBF/1 UPA123P-OBF/1 UPA123P-OBF/1 UPA123P-OBF/1 UPA123P-OBF/1	1A0043851W 1A0043851W 1A0043851W 1A0043851W 1A0043851W 1A0043851W 1A0043851W 1A0043851W 1A0043851W
Yamaha®	150F-200F-250G 2S 150 HPDI VMAX 2S 175-200-225-250-300 HPDI VMAX 2S F115-F150 EFI 4S F200-F225-F250 4S F115-F150-F175-F200 L4 F200-F225-F250-F300 V6 4S F350 4S V8	1990-2008 1996-2007 2000-2008 2000-2008 1999-2007 2002-2007 2004-to date 2006-to date	UPA123-OBF/2 UPA123-OBF/2 UPA123-OBF/2 UPA123-OBF/1 UPA123-OBF/2 UPA123-OBF/1 UPA123-OBF/2 UPA123-OBF/1	1A0044009T 1A0044009T 1A0044009T 1A0044007N 1A0044009T 1A0044007N 1A0044009T 1A0044007N	UPA123P-OBF/2 UPA123P-OBF/2 UPA123P-OBF/2 UPA123P-OBF/1 UPA123P-OBF/2 UPA123P-OBF/1 UPA123P-OBF/2 UPA123P-OBF/1	1A0044008R 1A0044008R 1A0044008R 1A0043851W 1A0044008R 1A0043851W 1A0044008R 1A0043851W
Honda®	BF135-BF150 4S BF150 V-TEC 4S BF175-BF200-BF225- BF250 4S	2005-to date 2008-to date 2001-to date	UPA123-OBF/1 UPA123-OBF/1 UPA123-OBF/1	1A0044007N 1A0044007N 1A0044007N	UPA123P-OBF/1 UPA123P-OBF/1 UPA123-OBF/1	1A0043851W 1A0043851W 1A0043851W
Suzuki®	DF100-115-140 4S DF150-175-DF200 L4 4S DF200-DF225-DF250-DF300-DF350 V6 4S	2008-to date 2006-to date 2004-to date	UPA123-OBF/1 UPA123-OBF/1 UPA123-OBF/2	1A0044007N 1A0044007N 1A0044009T	UPA123P-OBF/1 UPA123P-OBF/1 UPA123P-OBF/2	1A0043851W 1A0043851W 1A0043851W
Tohatsu®	115-120-140 2S 70-90-115 TLDI 4S BFT 115-150-200-225-250 4S BFT60-75-90	2004-to date 2004-to date 2014-to date 2015-to date	UPA123-OBF/2 UPA123-OBF/1 UPA123-OBF/1 UPA123-OBF/1	1A0044009T 1A0044007N 1A0044007N 1A0044007N	UPA123P-OBF/2 UPA123P-OBF/1 UPA123P-OBF/1 UPA123P-OBF/1	1A0044008R 1A0043851W 1A0043851W 1A0043851W
Selva®	80 PORTOFINO/TIGERSHARK 2S 150 WHITE SHARK 2S 100EFI MARLIN -115 EFI NARWHAL 225 BEAKED WHALE 4S 150EFI KILLER WHALE 4S - 200 SEI WHALE 4S	1995-2008 2001-2007 2000-to date 2019-to date 2000-to date	UPA123-OBF/1 UPA123-OBF/2 UPA123-OBF/1 UPA123-OBF/2 UPA123-OBF/1	1A0044007N 1A0044009T 1A0044007N 1A0044009T 1A0044007N	UPA123P-OBF/1 UPA123P-OBF/2 UPA123P-OBF/1 UPA123P-OBF/2 UPA123P-OBF/1	1A0043851W 1A0043433B 1A0043851W 1A0043433B 1A0043851W
Parsun®	D150 - D175 - D200 F115 EFI F300		UPA123-OBF/2 UPA123-OBF/1 UPA123-OBF/2	1A0044009T 1A0044007N 1A0044009T	UPA123P-OBF/2 UPA123P-OBF/1 UPA123P-OBF/2	1A00440008R 1A0043851W 1A0044008R
OXE®	125-150-175-200HP DIESEL 300 HP DIESEL	2018-to date 2020-to date	UPA123-OBF/1 UPA123-OBF/1	1A0044007N 1A0044007N	UPA123P-OBF/1 UPA123P-OBF/1	1A0043851W 1A0043851W
COX®	300 HP	2020-to date	UPA123-OBF/2	1A0044009T	UPA123P-OBF/2	1A0044008R

DCDC converter



DCDC converter

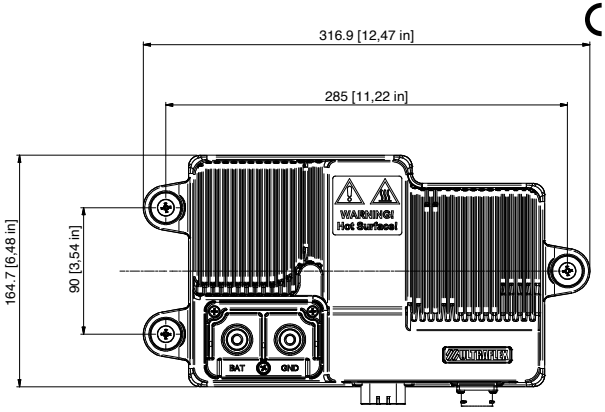

DCDC converter dimensions

DCDC converter - 1A0043993T

DCDC converter is a component of **Integra™ with UPA123** elecronic power system Every electronic actuator needs to be connected to a dedicated DCDC converter

A96-UPA - Tie bar for twin outboard engine/single UPA123 electronic actuator

Tie bars suitable with Integra™ equipped with UPA123 electronic power steering system only



A96-UPA M/Y



A96-UPA S/H

Two different lengths available:
From 26” to 29”engine center
From 29” to 34.5” engine center

A96-UPA M/Y-29	1A0044036W	From 26” to 29” engine center - For Mercury®, Yamaha® and Selva® engines
A96-UPA M/Y-34.5	1A0044035U	From 29” to 34.5” engine center - For Mercury®, Yamaha® and Selva® engines
A96-UPA S/H-29	1A0044038A	From 26” to 29” engine center- For Suzuki®, Honda® and Tohatsu® engines
A96-UPA S/H-34.5	1A0044037Y	From 29” to 34.5” engine center - For Suzuki®, Honda® and Tohatsu® engines

Integra™ EPS equipped with UPA123
Applications

Single engine, single actuator

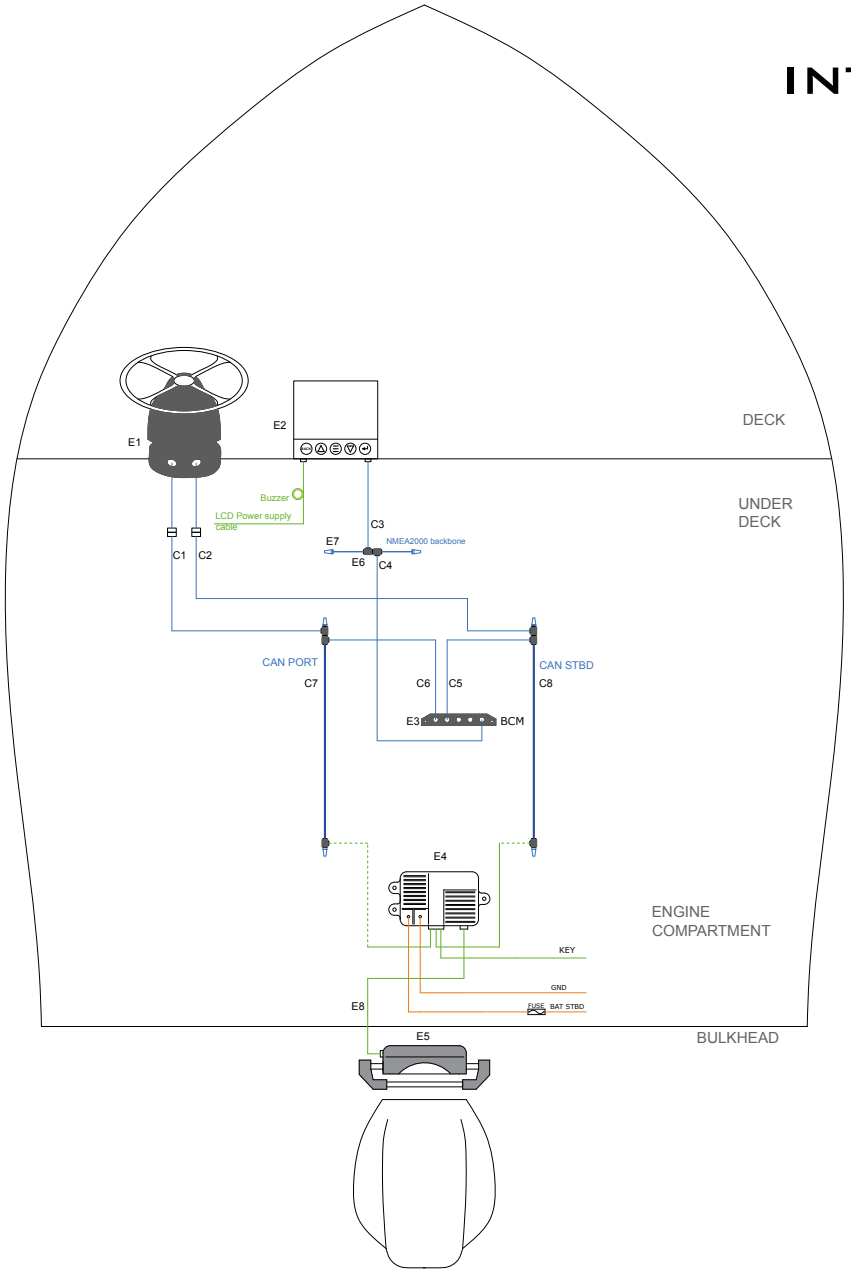

Main components

Name	Description	Quantity
E1	UIH1 Electronic helm - 1A0043536M	1
E1	X82 Tilt mechanism - 1A0043187N	1
E2	UID-5 - Veratron display - 1A0044276T	1
E3	BCM - Body control module - 1A0043540C	1
E4	UPA Driver - DC/DC converter - 1A0043993T	1
E5	UPA123 (or UPA123P) Electronic actuator	1
E6	CAN bus - Tee connection - 1A0043578E	8
E7	CAN bus - Terminator pair - 1A0043576A	3
C1-C6	CAN-bus Drop cables - length on request	6
C7-C8	CAN-bus Trunk cables - length on request	2
E8	Cable UPA123 - CAN-bus	1

NOTE: This configuration is intended for illustrative purposes only. For specific references regarding installations with your own engines, please refer to the component installation manuals.

Dual engine, dual actuator

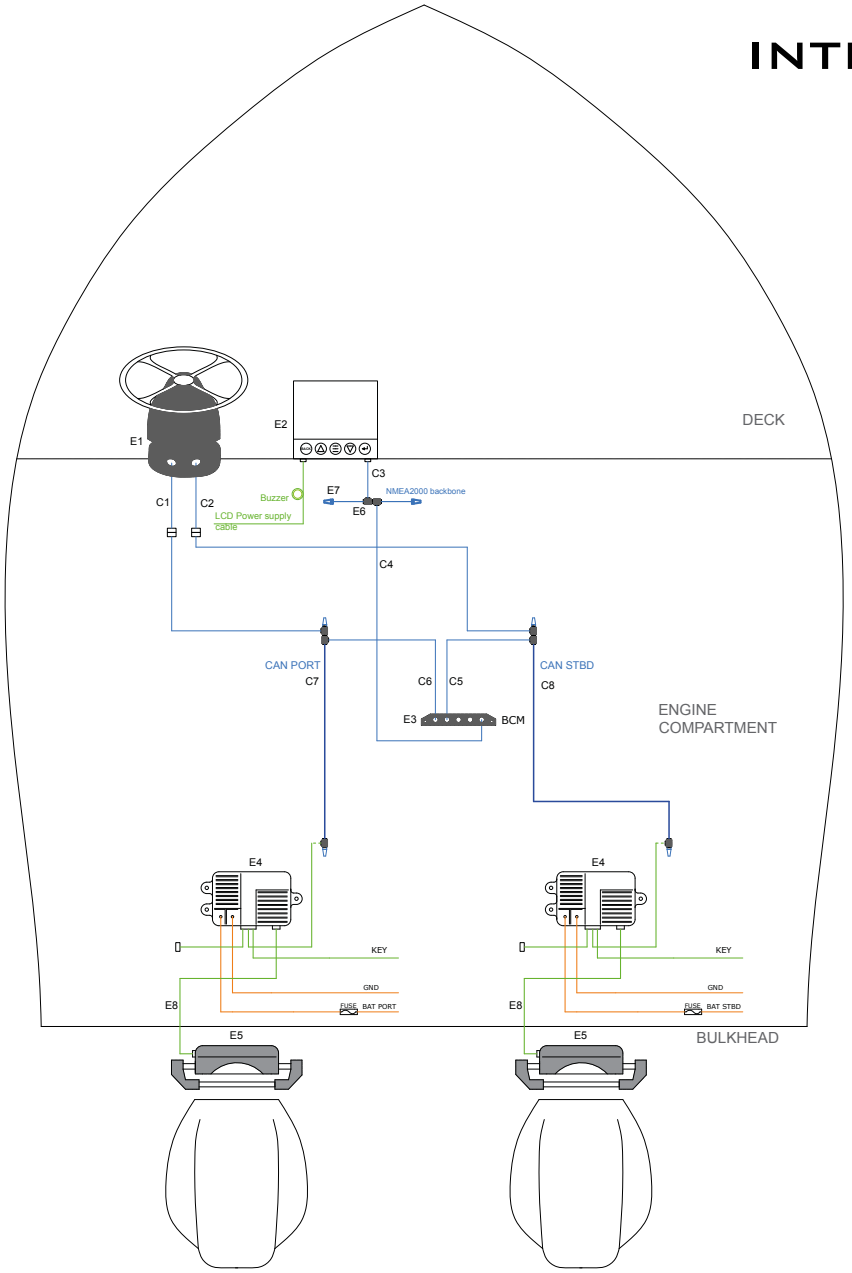

Main components

Name	Description	Quantity
E1	UIH1 Electronic helm - 1A0043536M	1
E1	X82 Tilt mechanism - 1A0043187N	1
E2	UID-5 - Veratron display - 1A0044276T	1
E3	BCM - Body control module - 1A0043540C	1
E4	UPA Driver - DC/DC converter - 1A0043993T	1
E5	UPA123 (or UPA123P) Electronic actuator	1
E6	CAN bus - Tee connection - 1A0043578E	8
E7	CAN bus - Terminator pair - 1A0043576A	3
C1-C6	CAN-bus Drop cables - length on request	6
C7-C8	CAN-bus Trunk cables - length on request	2
E8	Cable UPA123 - CAN-bus	2

NOTE: This configuration is intended for illustrative purposes only. For specific references regarding installations with your own engines, please refer to the component installation manuals.

Integra™ JS equipped with UPA123
Applications

Single engine, single actuator, with bow thruster

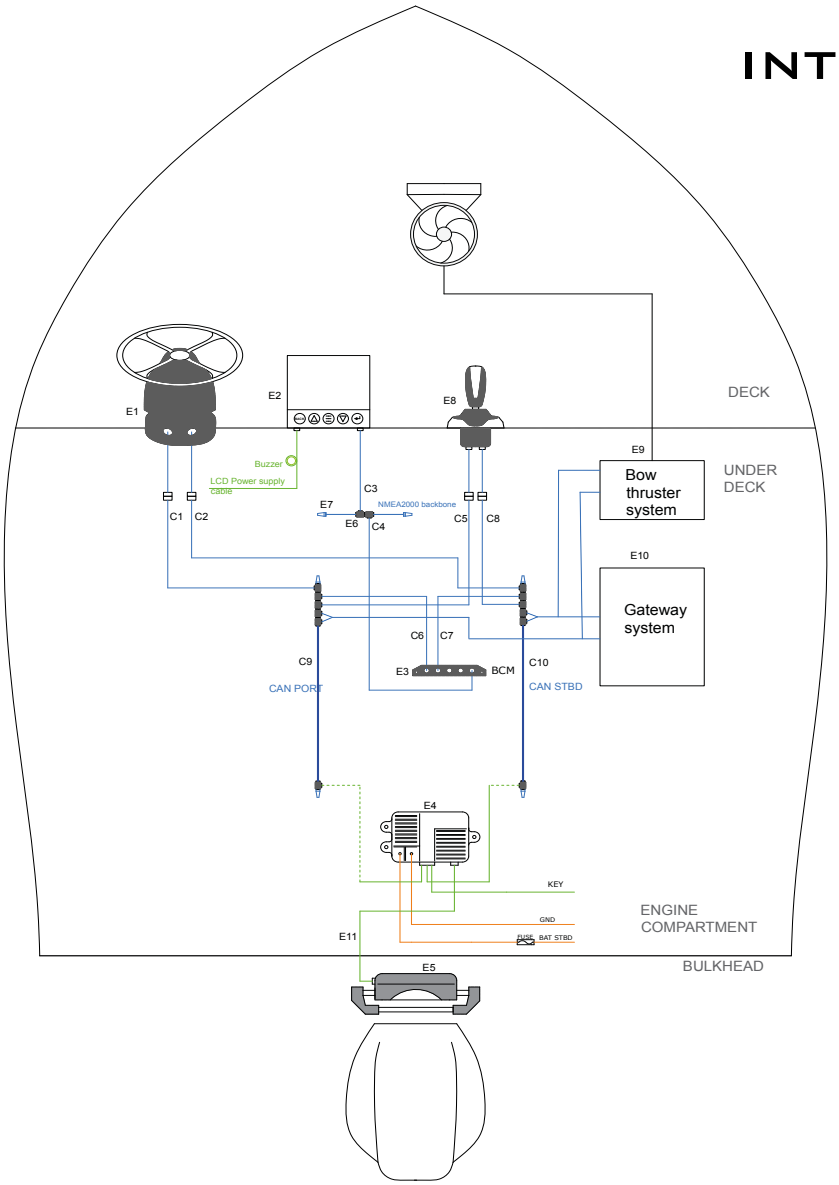

Main components

Name	Description	Quantity
E1	UIH1 Electronic helm - 1A0043536M	**1**
E1	X82 Tilt mechanism - 1A0043187N	**1**
E2	UID-5 - Veratron display - 1A0044276T	**1**
E3	BCM - Body control module - 1A0043540C	**1**
E4	UPA Driver - DC/DC converter - 1A0043993T	**1**
E5	UPA123 (or UPA123P) Electronic actuator	**1**
E6	CAN bus - Tee connection - 1A0043578E	**10**
E7	CAN bus - Terminator pair - 1A0043576A	**3**
E8	UJS-B joystick	**1**
E9	Bow thruster system	**-**
E10	Gateway system	**-**
E11	Cable UPA123 - CAN-bus	**1**
C1-C8	CAN-bus Drop cables - length on request	**8**
C9-C10	CAN-bus Trunk cables - length on request	**2**

NOTE: This configuration is intended for illustrative purposes only. For specific references regarding installations with your own engines, please refer to the component installation manuals.

Dual engine, dual actuator

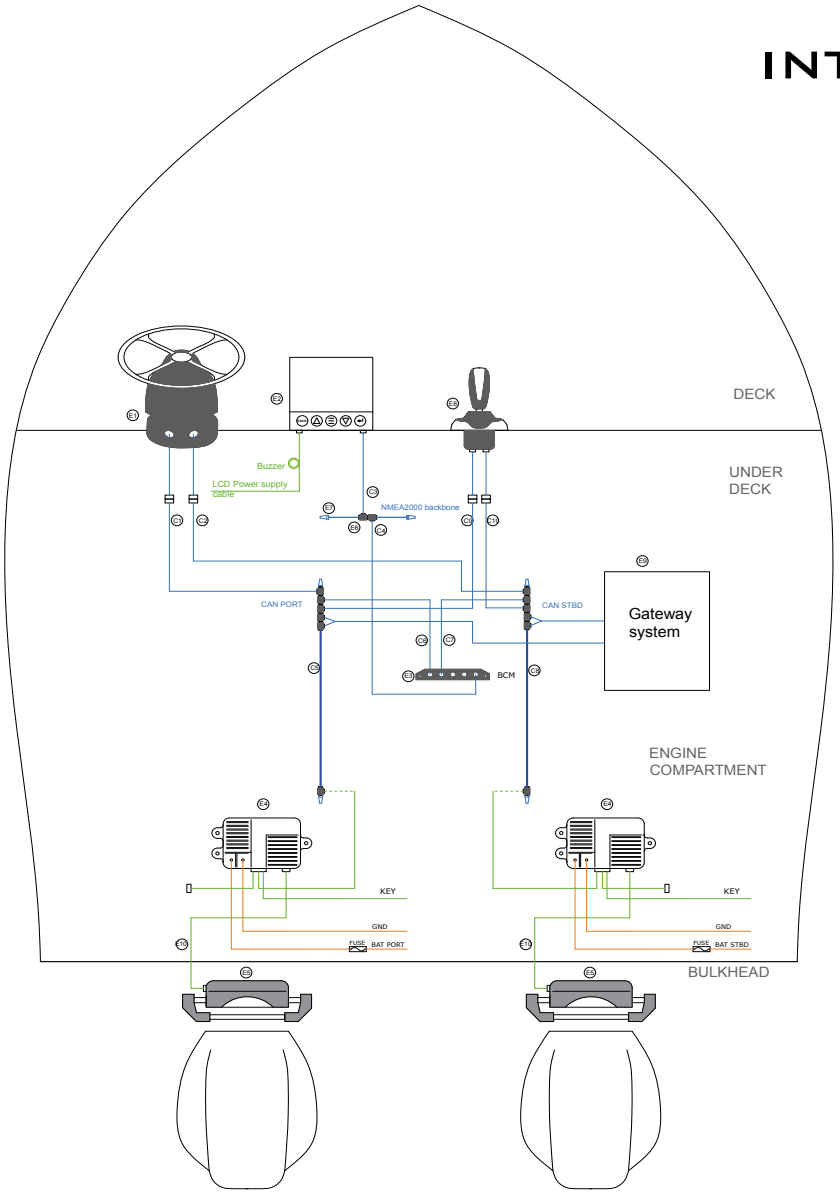

Main components

Name	Description	Quantity
E1	UIH1 Electronic helm - 1A0043536M	1
E1	X82 Tilt mechanism - 1A0043187N	1
E2	UID-5 - Veratron display - 1A0044276T	1
E3	BCM - Body control module - 1A0043540C	1
E4	UPA Driver - DC/DC converter - 1A0043993T	2
E5	UPA123 (or UPA123P) Electronic actuator	2
E6	CAN bus - Tee connection - 1A0043578E	10
E7	CAN bus - Terminator pair - 1A0043576A	3
E8	UJS-B joystick	1
E9	Gateway system	-
E10	Cable UPA123 - CAN-bus	2
C1-C8	CAN-bus Drop cables - length on request	8
C9-C10	CAN-bus Trunk cables - length on request	2

NOTE: This configuration is intended for illustrative purposes only. For specific references regarding installations with your own engines, please refer to the component installation manuals.

Integra™ JS equipped with UPA123
Applications

Dual engine, dual actuator, with bow thruster

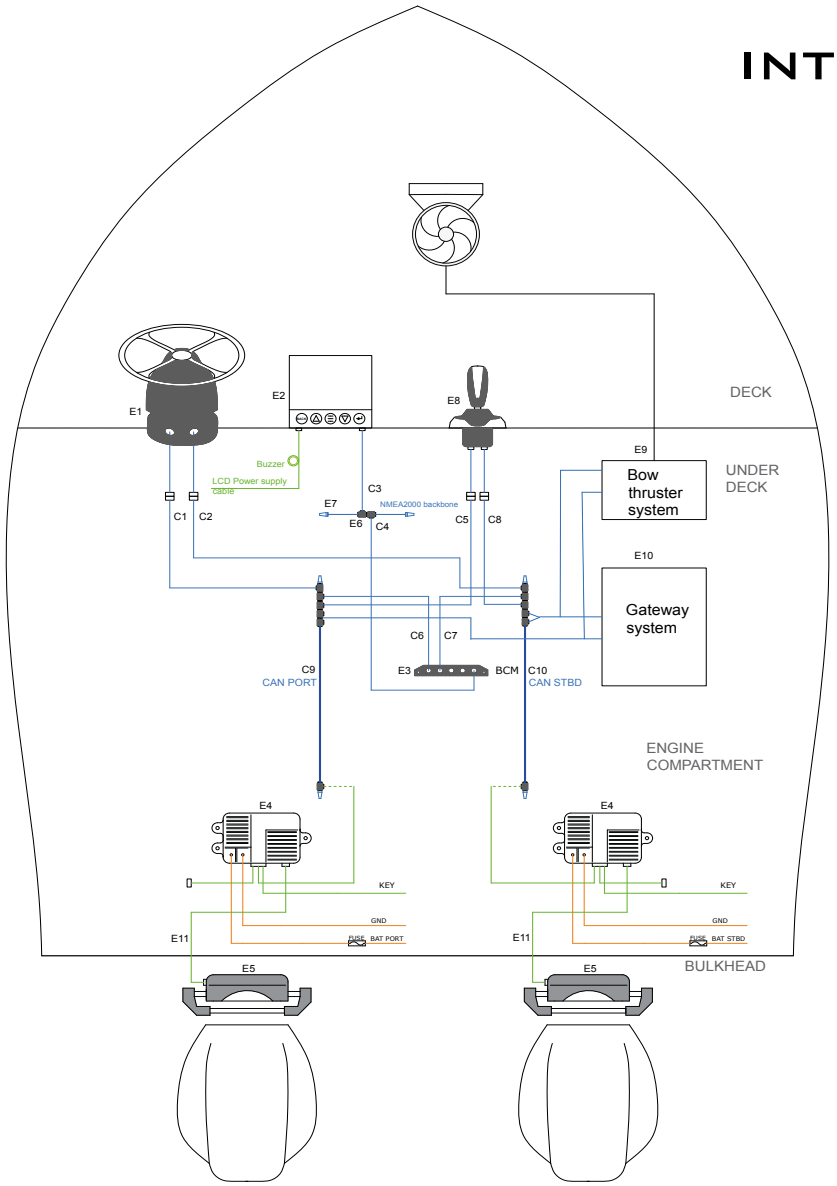

Main components

Name	Description	Quantity
E1	UIH1 Electronic helm - 1A0043536M	**1**
E1	X82 Tilt mechanism - 1A0043187N	**1**
E2	UID-5 - Veratron display - 1A0044276T	**1**
E3	BCM - Body control module - 1A0043540C	**1**
E4	UPA Driver - DC/DC converter - 1A0043993T	**1**
E5	UPA123 (or UPA123P) Electronic actuator	**1**
E6	CAN bus - Tee connection - 1A0043578E	**10**
E7	CAN bus - Terminator pair - 1A0043576A	**3**
E8	UJS-B joystick	**1**
E9	Bow thruster system	**1**
E10	Gateway system	**-**
E11	Cable UPA123 - CAN-bus	**-**
C1-C8	CAN-bus Drop cables - length on request	**8**
C9-C10	CAN-bus Trunk cables - length on request	**2**

NOTE: This configuration is intended for illustrative purposes only. For specific references regarding installations with your own engines, please refer to the component installation manuals.

Triple engine, dual actuator

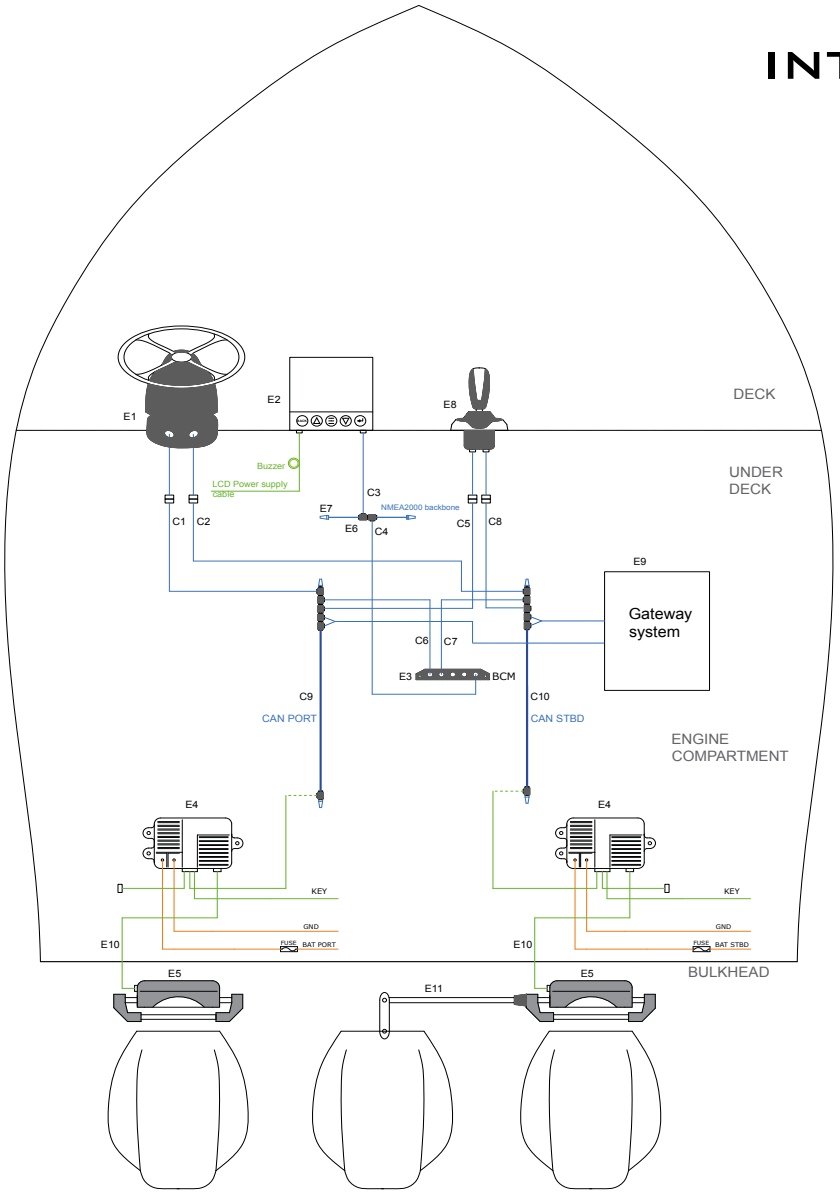

Main components

Name	Description	Quantity
E1	UIH1 Electronic helm - 1A0043536M	1
E1	X82 Tilt mechanism - 1A0043187N	1
E2	UID-5 - Veratron display - 1A0044276T	1
E3	BCM - Body control module - 1A0043540C	1
E4	UPA Driver - DC/DC converter - 1A0043993T	2
E5	UPA123 (or UPA123P) Electronic actuator	2
E6	CAN bus - Tee connection - 1A0043578E	12
E7	CAN bus - Terminator pair - 1A0043576A	3
E8	UJS-B joystick	1
E9	Gateway system	1
E10	Cable UPA123 - CAN-bus	-
E11	A98-120 tie bar for UPA123	-
C1-C8	CAN-bus Drop cables - length on request	8
C9-C10	CAN-bus Trunk cables - length on request	2

NOTE: This configuration is intended for illustrative purposes only. For specific references regarding installations with your own engines, please refer to the component installation manuals.

Integra™ JS equipped with UPA123
Applications

Quad engine, dual actuator

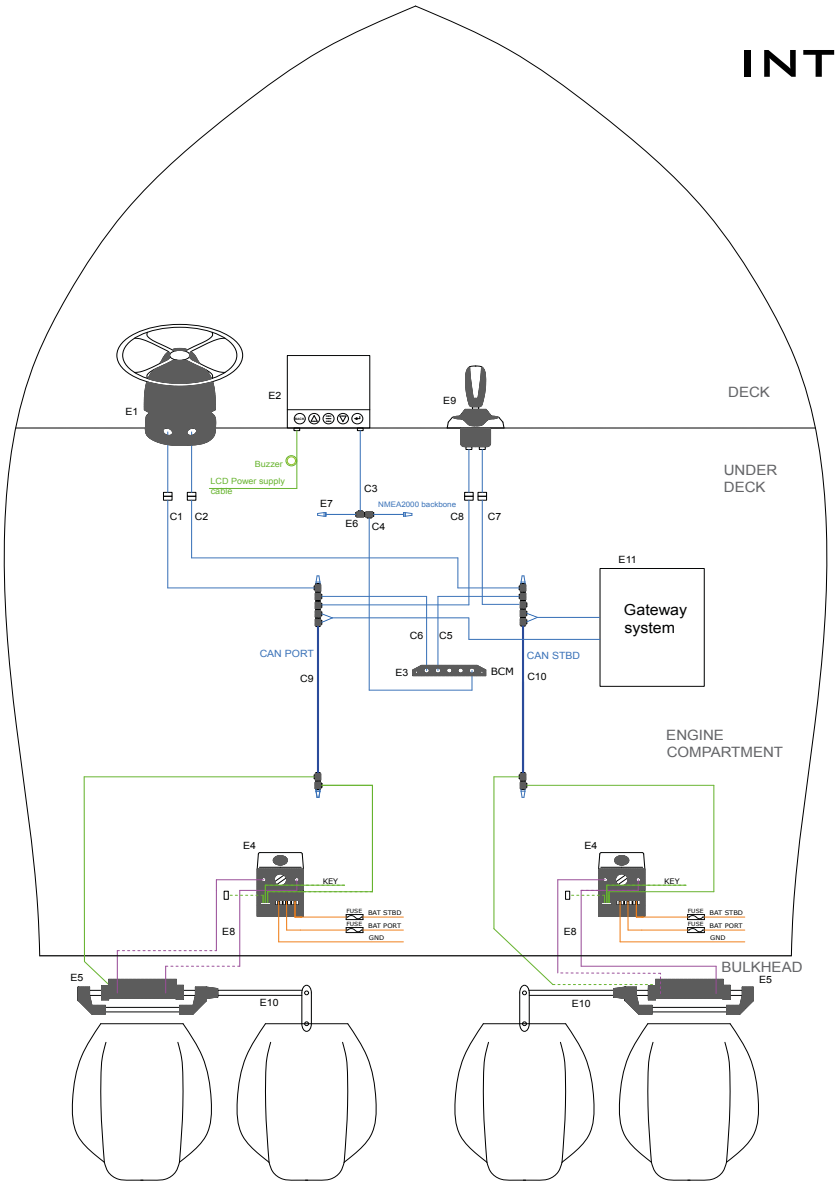

Main components

Name	Description	Quantity
E1	UIH1 Electronic helm - 1A0043536M	1
E1	X82 Tilt mechanism - 1A0043187N	1
E2	UID-5 - Veratron display - 1A0044276T	1
E3	BCM - Body control module - 1A0043540C	1
E4	UPA Driver - DC/DC converter - 1A0043993T	2
E5	UPA123 (or UPA123P) Electronic actuator	2
E6	CAN bus - Tee connection - 1A0043578E	10
E7	CAN bus - Terminator pair - 1A0043576A	3
E8	UJS-B joystick	-
E9	Gateway system	-
E10	Cable UPA123 - CAN-bus	2
E11	A98-120 tie bar	2
C1-C8	CAN-bus Trunk cables - length on request	8
C9-C10	CAN-bus Drop cables - length on request	2

NOTE: This configuration is intended for illustrative purposes only. For specific references regarding installations with your own engines, please refer to the component installation manuals.


ULTRAFLEX S.p.A.
Hydraulic cylinder UC293-I
ULTRAFLEX
UP Series Helm
Hydraulic pump UP28F
0412478 - 0120

Inboard steering systems

Single steering station installation diagram

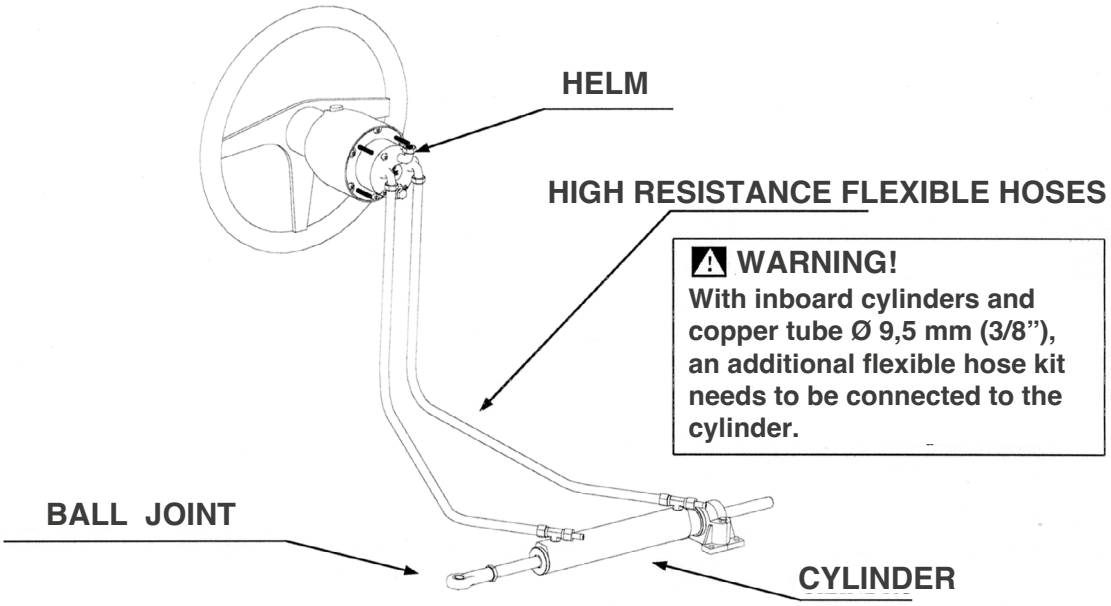

Dual steering station installation diagram

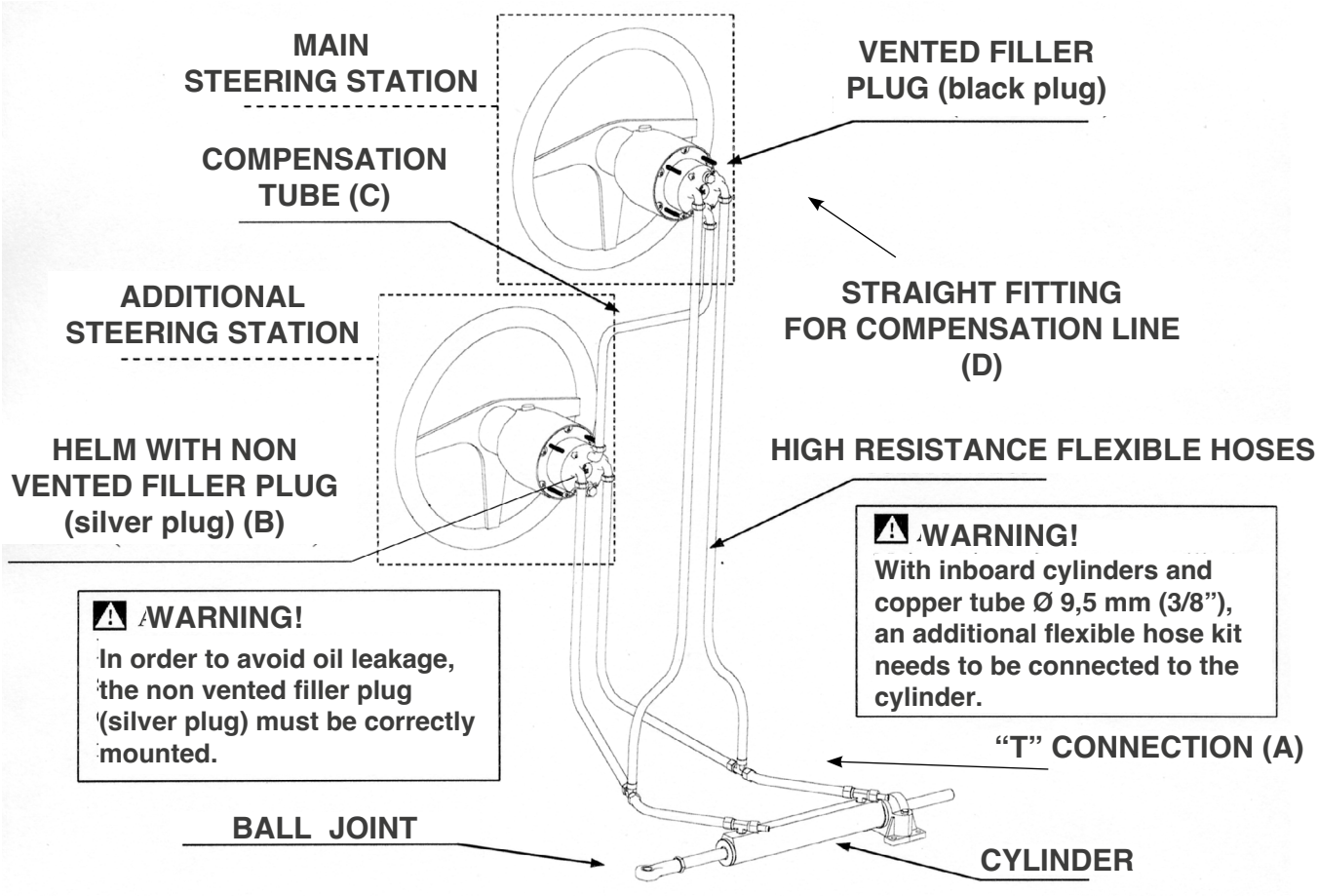

A) 3/8” T fitting	39502 V
B) non vented filler plug	40802 R
C) TU95 - 3/8” nylon tube (1m)	70701 D
D) SF38 - 3/8” straight fitting	39471 L

Kit OB-2S - 39518 L includes 2xA+B+2xD
Kit OB-2S - 43073 X
includes 2xA+B+8mxC+2xD

BOAT LENGTH	UP to 10 m (33')	UP to 10 m (33')	UP to 10 m (33')	10 ÷ 12 m (33' ÷ 40')	10 ÷ 12 m (33' ÷ 40')	12 ÷ 14 m (40' ÷ 46')	14 ÷ 16 m (46' ÷ 53')	16 ÷ 18 m (53' ÷ 59')	18 ÷ 20 m (59' ÷ 66')
CYLINDER / HELM PUMP	UC69-I	UC116-I	UC168-I	UC215-I	UC293-I	UC339-I	UC378-I	UC442-I	UC530-I
UP18	3,8 N - 3/8"								
UP20	3,5 N - 3/8"								
UP25		4,6 N - 3/8"	6,72 L - 3/8"	8,6 L - 3/8"					
UP28		4,1 M - 3/8"	6 N - 3/8"	7,6 L - 3/8"					
UP33		3,5 H - 3/8"	5,1 M - 3/8"	6,5 N - 3/8"	8,8 L - 3/8"				
UP39			4,3 H - 3/8"	5,5 M - 3/8"	7,5 N - 3/8"	N/A			
UP39-I R				N/A	N/A	8,6 N - R7	9,6 L - R7		
UP45					6,5 M - 3/8"	N/A	N/A		
UP45-I R						7,5 M - R7	8,4 N - R7	9,8 N - R7	11,5 L - R7
UP56						6,0 H - R7	6,7 M - R7	7,9 N - R7	9,5 N - R7
UP68							5,5 P - R7	6,5 M - R7	7,8 N - R7

STEERING WHEEL TURNS LOCK TO LOCK	STEERING WHEEL FEELING	HOSE TYPE
	L=LIGHT	3/8"= 5/16 HOSE AND FITTINGS OR KIT-OB/M
	N=NORMAL	
	M=MEDIUM	R7 = TUR7 FLEXIBLE HOSE AND FR7 FITTINGS
	H=HEAVY	



Photo courtesy of Fluid Motion

WARNING: These recommendations should be used as a general reference only. Final selection should be made with the assistance of a qualified installation technician. For any further information please contact our Technical Service

UP20F - UP25F - UP28F - UP33F - UP39F - UP45F
Front mount helms



UP20F

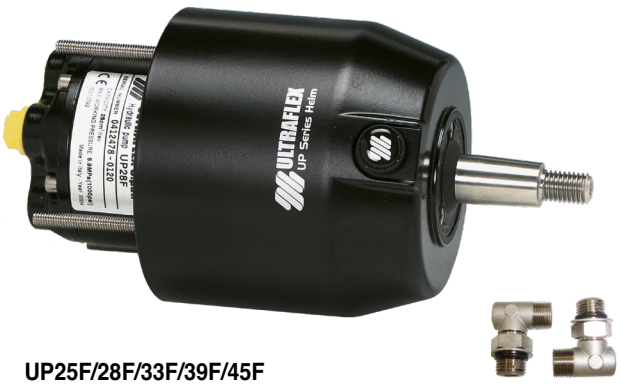

UP25F/28F/33F/39F/45F

- Available in six different displacement sizes
- Compact design
- Ball bearing piston race
- Built-in lock valve for positive rudder lock
- Integrated relief valve for over-pressure protection
- 3/4” tapered stainless steel shaft
- Easily accessible lock valve and shaft seal for replacement
- Includes 90° **adjustable** fittings for 3/8” tube
- **X74** - 1A0043048Y square flange for UP20
- **X64** - 1A0040198C square flange (for all models except UP20) or **X57** - 1A0039464P round flange (for all models except UP20) permit to install the pumps in an intermediate dashboard position.



UP20F + X74

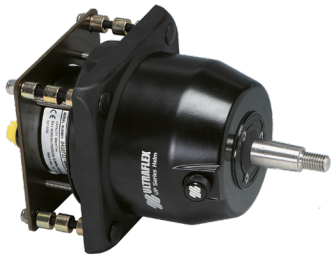

UP25F/28F/33F/39F/45F + X64



UP25F/28F/33F/39F/45F + X57

MODEL	PART No.	MOUNTING	DISPLACEMENT/ REVOLUTION	No. OF PISTONS	RELIEF VALVE SETTING	MAXIMUM WHEEL DIA.	WEIGHT
UP20F	1A0043180Y	Front mount	20 cc - 1.2 cu.in	5	70 Bar - 1000 PSI	508 mm - 20”	3,6 kg - 8 lbs
UP25F	1A0042462D	Front mount	25 cc - 1.5 cu.in	5	70 Bar - 1000 PSI	710 mm - 28”	5 kg - 11 lbs
UP28F	1A0042459R	Front mount	28 cc - 1.7 cu.in	5	70 Bar - 1000 PSI	710 mm - 28”	5 kg - 11 lbs
UP33F	1A0042456J	Front mount	33 cc - 2.0 cu.in	7	70 Bar - 1000 PSI	710 mm - 28”	5 kg - 11 lbs
UP39F	1A0042453C	Front mount	39 cc - 2.4 cu.in	7	70 Bar - 1000 PSI	710 mm - 28”	5 kg - 11 lbs
UP45F	1A0042465K	Front mount	45 cc - 2.7 cu.in	7	70 Bar - 1000 PSI	710 mm - 28”	5 kg - 11 lbs

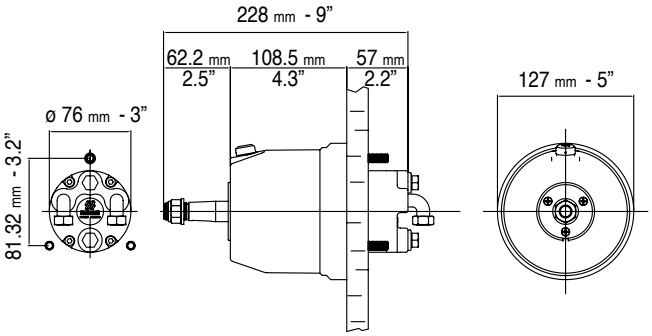

UP25F, UP28F, UP33F, UP39F, UP45F DIMENSIONS

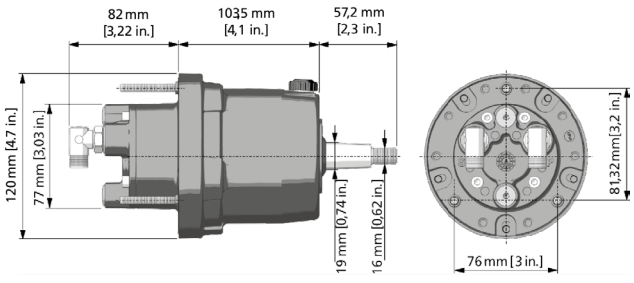

UP20F DIMENSIONS

UP28R - UP33R - UP39R - UP39-IR - UP45R - UP45-IR
Rear mount helms



X68



KIT F



- Available in four different displacement sizes
- Compact design
- Ball bearing piston race
- Built-in lock valve for positive rudder lock
- Integrated relief valve for over-pressure protection
- 3/4” tapered stainless steel shaft
- Easily accessible shaft seal for replacement
- Cast iron cylinder rotor for greater durability and longer life
- White bezel included
- Complete with 90° **adjustable** fittings for 3/8” tube, except UP39-I R and UP45-I R pumps (straight fittings for 12 mm hose)
- **X68** (optional) - 1A0040894Z Chrome plated bezel
- **KIT F** (optional) - 1A0039664Y Remote fill adapter

MODEL	PART No.	MOUNTING	DISPLACEMENT/ REVOLUTION	No. OF PISTONS	RELIEF VALVE SETTING	MAXIMUM WHEEL DIA.	WEIGHT
UP28R	1A0042460Z	Rear mount	28 cc - 1.7 cu.in	5	70 Bar - 1000 PSI	710 mm - 28”	5 kg - 11 lbs
UP33R	1A0042457L	Rear mount	33 cc - 2.0 cu.in	7	70 Bar - 1000 PSI	710 mm - 28”	5 kg - 11 lbs
UP39R	1A0042454E	Rear mount	39 cc - 2.4 cu.in	7	70 Bar - 1000 PSI	710 mm - 28”	5 kg - 11 lbs
UP39-IR	1A0042557R	Rear mount	39 cc - 2.4 cu.in	7	70 Bar - 1000 PSI	710 mm - 28”	5 kg - 11 lbs
UP45R	1A0042466M	Rear mount	45 cc - 2.7 cu.in	7	70 Bar - 1000 PSI	710 mm - 28”	5 kg - 11 lbs
UP45-IR	1A0041279H	Rear mount	45 cc - 2.7 cu.in	7	70 Bar - 1000 PSI	710 mm - 28”	5 kg - 11 lbs

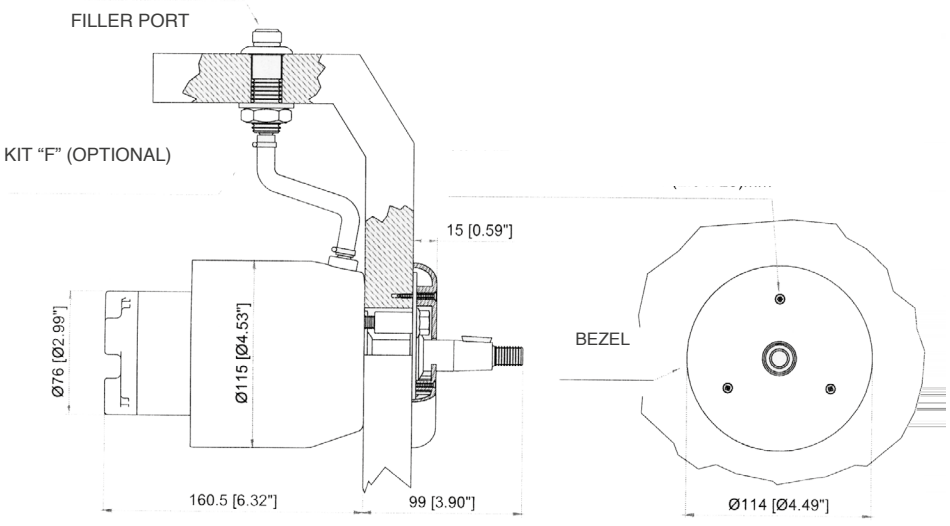

UP28R, UP33R, UP39R, UP39-IR, UP45R, UP45-IR DIMENSIONS

UP56 - UP68
Rear or intermediate mount helms





KIT F56



KR56

- Rear or intermediate mounting configuration
- Ball bearing piston race
- Built-in lock valve for positive rudder lock
- 3/4” tapered shaft
- Easily accessible shaft seal for replacement
- Brass rotor for greater durability and longer life
- 3/8” BSPP fitting for 12 mm tube
- Complete with fittings
- **KR56** (optional) - 1A0042558T permits to install the UP56 and UP68 pumps in a rear mount position. Includes chrome plated cover ring.
- **KIM56** (optional) - 1A0042559V hardware kit: permits to install the UP56 and UP68 pumps in an intermediate mount position

  NOTE: UP56 or UP68 installation needs either kit KR56 or KIM56

- **KIT F56** (optional) - 1A0040813W Remote fill adapter

MODEL	P. No.	MOUNTING	DISPLACEMENT/ REVOLUTION	No. OF PISTONS	RELIEF VALVE SETTING	MAXIMUM WHEEL DIA.	WEIGHT
UP56	1A0040808D	Rear (KR56) - Intermediate (KIM56)	56 cc - 3.4 cu.in	7	70 Bar - 1000 PSI	710 mm - 28”	7,5 kg - 16,5 lbs
UP68	1A0042561F	Rear (KR56) - Intermediate (KIM56)	68 cc - 4.15 cu.in	7	70 Bar - 1000 PSI	710 mm - 28”	7,5 kg - 16,5 lbs

RV70 - 1A0042560D **- Relief valve 70 bar**

WARNING: Applications with UP56 or UP68 pumps require the RV70 relief valve added to the system for over-pressure protection.

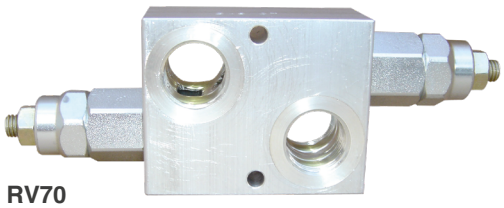

RV70

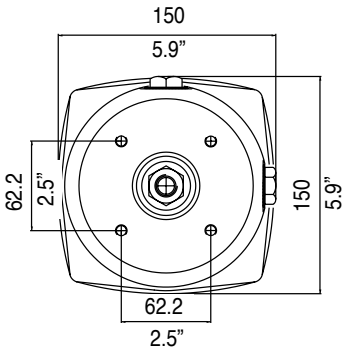

UP56, UP68

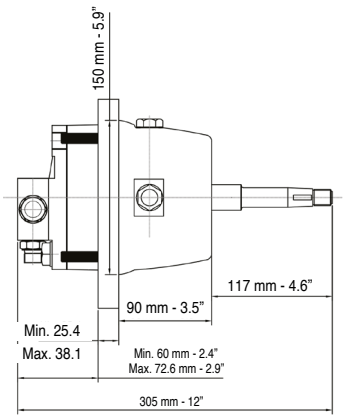

UP56, UP68 INTERMEDIATE MOUNT

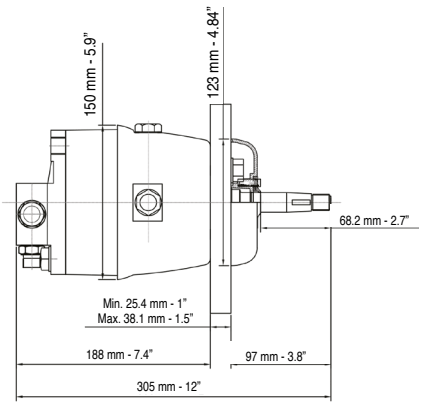

UP56, UP68 REAR MOUNT



UC69-I - Balanced: the number of turns lock-to-lock is equal port to starboard or vice-versa.



UC116-I; UC168-I; UC215-I
All balanced cylinders: the number of turns lock-to-lock is equal port to starboard and vice-versa

SPECIFICATIONS	UC69-I - 1A0039782E	UC116-I - 1A0039431Y	UC168-I - 1A0039432A	UC215-I - 1A0039433C
Volume	69 cc - 4.2 cu. in	116 cc - 7 cu. in	168 cc - 10.25 cu.in	215 cc - 13.12 cu. in
Torque	32 kgm - 2783 lbs. in	58 kgm - 5043 lbs. in	87 kgm - 7565 lbs. in	111 kgm - 9652 lbs. in
Output force	168 kg - 371 lbs	464 kg - 1023 lbs	673 kg - 1483 lbs	673 kg - 1483 lbs
Internal diameter	25 mm - 0.98”	32 mm - 1.25”	40 mm - 1.57”	40 mm - 1.57”
Stroke	150 mm - 5.9”	178 mm - 7”	178 mm - 7”	228 mm - 9”
3/8” (9,5 mm) Fittings	For high pressure flex hose	For high pressure flex hose	For high pressure flex hose	For high pressure flex hose

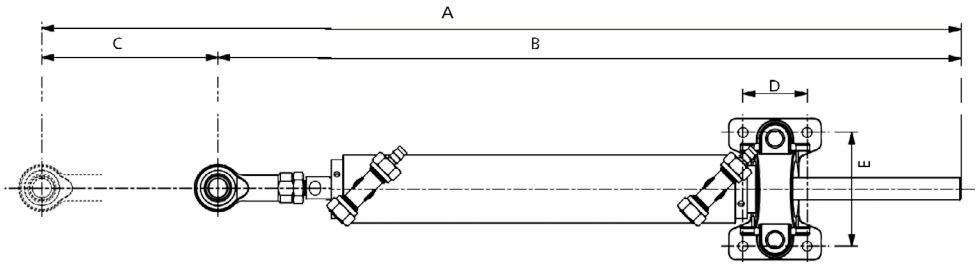

	UC69-I	UC116-I	UC168-I	UC215-I
A	644 mm - 25.33”	741 mm - 29.17”	792 mm - 31.18”	941 mm - 37.05”
B	494 mm - 19.43”	563 mm - 22.17”	614 mm - 24.17”	713 mm - 28.07”
C (stroke)	150 mm - 5.9”	178 mm - 7”	178 mm - 7”	228 mm - 8.98”
D	40 mm - 1.57”	40 mm - 1.57”	40 mm - 1.57”	40 mm - 1.57”
E	73 mm - 2.87”	73 mm - 2.87”	105 mm - 4.13”	105 mm - 4.13”
Rod Ø	14 mm - 0.55”	14 mm - 0.55”	20 mm - 0.79”	20 mm - 0.79”

UC293-I - UC378-I
Inboard cylinders



UC293-I; UC378-I
Balanced: the number of turns lock-to-lock is equal port to starboard or vice-versa.

SPECIFICATIONS	**UC293-I -** 1A0040246L **Brass**	**UC378-I -** 1A0040810P **Brass**
Volume	293 cc - 17.8 cu. in	376 cc - 22.94 cu. in
Torque	146,5 kgm - 12816 lbs. in	187,6 kgm - 16347 lbs. in
Output force	1155 kg - 2545 lbs	1155 kg - 2545 lbs
Internal diameter	50 mm - 1.97”	50 mm - 1.97”
Stroke	178 mm - 7”	228 mm - 9”
Fittings	3/8” (9,5 mm) for high pressure flex hose	for (12 mm) copper tube (flexible connection hoses not included) or TUR7 high pressure flex hose

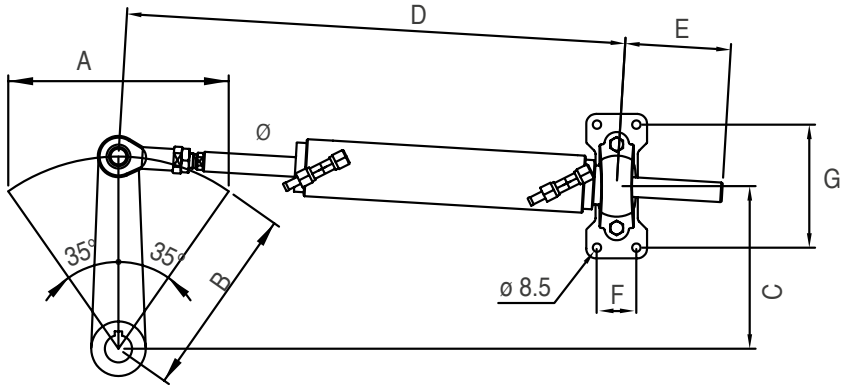

	UC293-I	UC378-I
A	178 mm - 7”	228 mm - 9”
B	163 mm - 6.4”	199 mm - 7.8”
C	134 mm - 5.2”	163 mm - 6.4”
D	506 mm - 19.9”	592 mm - 23.3”
E	107 mm - 4.2”	132,5 mm - 5.2”
F	40 mm - 1.6”	40 mm - 1.6”
G	125 mm - 4.9”	125 mm - 4.9”
Rod Ø	20 mm - 0.8”	20 mm - 0.8”



UC339-I; UC442-I
Balanced: the number of turns lock-to-lock is equal port to starboard or vice-versa.



UC530-I
Balanced: the number of turns lock-to-lock is equal port to starboard or vice-versa.

SPECIFICATIONS	UC339-I - 1A0042562H	UC442-I - 1A0042563K	UC530-I - 1A0042564M
Volume	339 cc – 20.7 cu.in	442 cc – 26.9 cu.in	530 cc – 32.3 cu.in
Torque	172 kgm – 14957.7 lbs.in	223 kgm – 19335.6 lbs.in	270 kgm – 23443.4 lbs.in
Output force	1051 kg – 2316.6 lbs	1051 kg – 2316.6 lbs	1513 kg – 3335.9 lbs
Inside diameter	50 mm – 1.97”	50 mm – 1.97”	60 mm – 2.36“
Stroke	230 mm – 9”	300 mm – 12”	250 mm – 10”
Fittings	For 12 mm copper tube or TUR7 high pressure flex hose	For 12 mm copper tube or TUR7 high pressure flex hose	For 12 mm copper tube or TUR7 high pressure flex hose

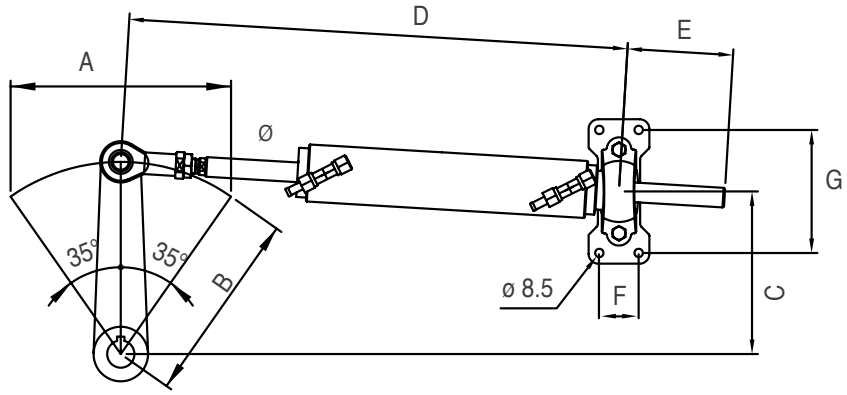

	UC339-I	UC442-I	UC530-I
A	230 mm – 9“	300 mm – 12“	250 mm – 10“
B	200 mm – 7.9“	260 mm – 10.2“	218 mm – 8.6“
C	164 mm – 6.5“	212 mm – 8.3“	178 mm – 7.0“
D	637 mm – 25.1“	749 mm – 29.5“	723 mm – 28.5“
E	147 mm – 5.8“	183 mm – 7.2“	168 mm – 6.6“
F	70 mm – 2.8“	70 mm – 2.8“	120 mm – 4.7“
G	110 mm – 4.3“	110 mm – 4.3“	104 mm – 4.1“
Rod Ø	25 mm – 0.98“	25 mm – 0.98“	30 mm – 1.18“

Hoses - accessories for inboard steering systems

KIT OB/M - Hose kit with preassembled fittings at one end for single station installation

Two high pressure flexible hoses with fittings featuring turning nuts preassembled at one end only. It is supplied with two spare fittings and two bend restrictors. Available in three standard lengths that can be cut to fit the required application.

KIT OB/M	LENGTH	P. No.
KIT OB/M-60	6,00 m - 19.7 ft	1A0041708 E
KIT OB/M-90	9,00 m - 29.5 ft	1A0041709 G
KIT OB/M-150	15,00 m - 49,2 ft	1A0042565 P



KIT OB/M

TU5/16 - 1A0041305F 5/16” nylon tubing for OB-F5/16 fittings. Available per metre (1A0041305F), 50 m (164 ft) coils (1A0042574R) and 150 m (492 ft) coils (1A0041389R).

OB-F5/16 - 1A0042670L Two reusable fittings featuring turning nut for use with 5/16” hydraulic hose and connection for 3/8” end fitting

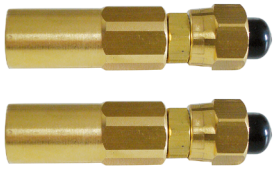

OB-F5/16

TUR7 - 1A0042568W High pressure hydraulic hose for FR7 12mm end fittings. Available per metre and 50 m (164 ft) coils (1A0042567U).

FR7 - 1A0042569Y 1 reusable fitting for use with 3/8” hydraulic hose and connection with 12 mm helm and cylinder fittings.

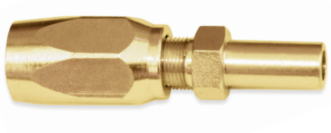

FR7

RV70 - 1A0042560D Relief valve required for use in inboard applications with UP56 and UP68 pumps.



RV70

KIT OB-2S - 1A0043183E Fitting kit for a second steering station or for an autopilot installation. It includes all necessary fittings for 3/8” flexible hose and 8 m (ft 26.3) of 3/8” dia. nylon tube for the conpensating line.

KIT 95 – 1A0039516G 3/8” copper tube fitting kit. It includes one 1,0 m (3.2’) nylon tube and all necessary fittings for a single station application.

KIT 120-I - 1A0042765Y 12 mm copper tube fitting kit. It includes one 1,0 m (3.2’) nylon tube and all necessary fittings for a single station application.

KIT 95-2S – 1A0043184G Fitting kit for a second steering station or for an autopilot installation. It includes all necessary fittings for 3/8” flexible hose or copper tube.

KIT 120U-2S - 1A0041625A Fitting kit for a second steering station or for an autopilot installation. It includes all necessary fittings for 12 mm flexible hose or copper tube in UP33-I R or UP45-I R applications.



KIT OB-2S

KIT 120-2S - 1A0040821V Fitting kit for a second steering station or for an autopilot installation for UP56 and UP68 pumps

BP 95 - 1A0042829Y By-pass for 3/8” flexible hose

BP 56 - 1A0042566S By-pass for 12 mm hose. For use with UC339-I, UC442-I and UC530-I cylinders in installation with copper tube. Connection flex hoses included.



KIT 95 - KIT120-I

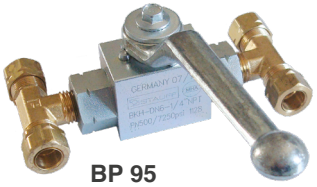

BP 95

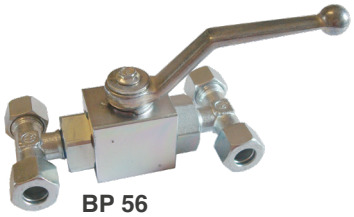

BP 56



KIT 95-2S - KIT 120U-2S

Hoses - accessories for inboard steering systems

OL 150 - 1A0042398X:
Hydraulic oil sold in 1 litre (0.26 gallons) bottle
- Hydraulic oil: 150 VG 15
- Solidification point: < -30°C
- Contamination according to NAS1638≤ 8

KIT F - 1A0039664Y:
remote fill adapter for rear mount UP28, UP33, UP39, UP45 pumps.

KIT F56 - 1A0040813W:
remote fill adapter for rear mount UP56 and UP68 pumps.



OL 150


KIT F - KIT F56 (adapter included)

Order guide

PUMP model	CYLINDER model	Whell turns Lock-to-lock	Max rudder torque	Flex hose or copper tube	Kit for a dual station installation
UP20 F	UC69	3,5	32 kgm 2780 lbs.in.	TU5/16 flex hose or 3/8" copper tube	KIT-OB-2S 1A0043183E or Kit 95-2S 1A0039518L
UP25 F	UC116-I	4,6	58 kgm 5043 lbs.in.	TU5/16 flex hose or 3/8" copper tube	KIT-OB-2S 1A0043183E or Kit 95-2S 1A0039518L
UP28 F or UP28 R	UC116-I	4,1	58 kgm 5043 lbs.in.	TU5/16 flex hose or 3/8" copper tube	KIT-OB-2S 1A0043183E or Kit 95-2S 1A0039518L
UP28 F or UP28 R	UC168-I	6,0	87 kgm 7565 lbs.in.	TU5/16 flex hose or 3/8" copper tube	KIT-OB-2S 1A0043183E or Kit 95-2S 1A0039518L
UP33 F or UP33 R	UC168-I	5,1	87 kgm 7565 lbs.in.	TU5/16 flex hose or 3/8" copper tube	KIT-OB-2S 1A0043183E or Kit 95-2S 1A0039518L
UP33 F or UP33 R	UC215-I	6,5	111 kgm 9642 lbs.in.	TU5/16 flex hose or 3/8" copper tube	KIT-OB-2S 1A0043183E or Kit 95-2S 1A0039518L
UP39 F or UP39 R	UC215-I	5,5	111 kgm 9642 lbs.in.	TU5/16 flex hose or 3/8" copper tube	KIT-OB-2S 1A0043183E or Kit 95-2S 1A0039518L
UP39 F or UP39 R	UC293-I	7,5	146,5 kgm 12816 lbs.in.	TU5/16 flex hose or 3/8" copper tube	KIT-OB-2S 1A0043183E or Kit 95-2S 1A0039518L
UP45 F or UP45 R	UC293-I	6,5	146,5 kgm 12816 lbs.in.	TU5/16 flex hose or 3/8" copper tube	KIT-OB-2S 1A0043183E or Kit 95-2S 1A0039518L
UP39-I R	UC339-I	8,6	172 kgm 14958 lbs.in	12mm copper tube or TUR7 flex hose	KIT120U-2S 1A0041625A
UP56* with KR56 or KIM56	UC339-I	6,0	172 kgm 14958 lbs.in	12mm copper tube or TUR7 flex hose	KIT120-2S 1A0040821V
UP45-I R	UC378-I	8,4	187,6 kgm 16347 lbs.in.	12mm copper tube or TUR7 flex hose	KIT120U-2S 1A0041625A
UP56* with KR56 or KIM56	UC378-I	6,7	187,6 kgm 16347 lbs.in.	12mm copper tube or TUR7 flex hose	KIT120-2S 1A0040821V
UP56* with KR56 or KIM56	UC442-I	7,9	223 kgm 19336 lbs.in	12mm copper tube or TUR7 flex hose	KIT120-2S 1A0040821V
UP68* with KR56 or KIM56	UC442-I	6,5	223 kgm 19336 lbs.in	12mm copper tube or TUR7 flex hose	KIT120-2S 1A0040821V
UP68* with KR56 or KIM56	UC530-I	7,8	270 kgm 23443 lbs.in	12mm copper tube or TUR7 flex hose	KIT120-2S 1A0040821V

* **WARNING:** Applications with UP56 or UP68 pumps require the RV70 - 1A0042560D relief valve added to the system for over-pressure protection.

Packaged inboard steering systems

GOTECH-I

GOTECH-I package kit contains:

UP18	Intermediate helm pump
UC69-I	Inboard cylinder
OL 150	Hydraulic oil - 2 litres
KIT OB-GT/M-60	Hose kit dia. 1/4” 6 m (19.7”) length with fittings preassembled at one end only.

The wheel is not included

GOTECH-I	1A0042824M	Wheel turns 3,8



GOTECH-I

HYCO-I

HYCO-I package kit contains:

UP20 F	Front mount helm pump.
UC69-I	Inboard cylinder.
OL 150	Hydraulic oil - 2 litres.
KIT OB-60	Hose kit with preassembled fittings. Length: 6 m (19.7’)

HYCO-I not including flexible hoses or with Kit OB/M-60 or Kit OB/M-90 is available on request. The wheel is not included.

WARNING: HYCO-I steering system is suitable for inboard boats up to approx. 10 m (32.8’) length and 25 mph max speed.

HYCO-I	1A0040224A	Wheel turns 3,5



HYCO-I

Fittings

61BCA - 6A0071004K
3/8” (9,5 mm) nut and sleeve assembly, brass

AF45 - 1A0041284A
45° adjustable fitting, helm and tube.

AF90 -6A0074144U
90° adjustable fitting, nickel plated brass

SF38 - 1A0039471L
3/8” (9,5 mm) connector fitting, helm and tube

SF12 - 1A0041306H
straight fitting, helm and tube Ø 12 mm

VF38 - 1A0039503X
3/8” (9,5 mm) bleed T for cylinders, brass

QCFN - 1A0041307K
Quick connect bleed T for cylinder, nickel plated

VFN916 - 6A0076988L
9/16 (14.3 mm) x 24 for dual station, nickel plated



61BCA



AF45



AF90

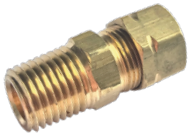

SF38



SF12

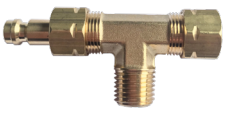

VF38



QCFN



VFN916



MD – Packaged kit for single station



MD2 – Packaged kit for dual station

System features

- Eliminates torque at the steering wheel
- Three different selectable levels of power give the boater the desired feeling on the wheel (PATENTED).
- Automatically reverts to manual mode in case of power loss.
- High efficiency, low Amp draw
- The system always running permits immediate control in any sea conditions
- Equipped with safety switch ON/OFF (SMART BUTTON)
- Can be used on dual station installations
- Suitable for use with autopilot
- Low noise
- Voltage: 12VDC
- CE marked in conformity with ABYC P21, ISO 10592 safety standards
- Ignition protected (SAE J-1171 and UNI EN 28846)

System components

- 1 single packaged **KIT MD** for single station containing:
  - 1 **UH** Front or tilt mount Main Helm
  - 1 **UPMD** Power Unit, 15' (4,5 m) wiring harness included
  - 1 **UCMD** User Interface
  - 4 **OL 150** bottles of hydraulic oil (single bottle part no. 1A0042398X)
- 1 inboard cylinder (suggested model: see "order guide" next page)
- 1 **KIT MD2** for dual station
- Flexible hydraulic hoses.
- 1 Tilt mechanism **X88** - 1A0044006L suitable for Tilt Mount Helm. Tilt range of 48° and five locking positions
- 1 Steering wheel: see selection
- 1 Instruction manual

Note

The MasterDrive™ Helms (both the UH main and the UHD secondary for a dual station), the UPMD Power Unit and the UCMD User Interface are the same products shown on the outboard MasterDrive™ systems.
For more details please refer to the outboard MasterDrive™ section.

Masterdrive™
Power assisted inboard steering system

Order guide

SINGLE CYLINDER APPLICATION					
Kit MasterDrive™	**Cylinder**	**Wheel turns**	**Max Rudder torque**	**Connection flex hoses**	**Steering wheel**
MD32-F - 1A0042098J	**UC116** - 1A0039431Y	3,6	52 kgm 5043 lbs. in	1 kit OB-SVS (length selection) 1 kit OB (selez. lunghezza)	1 steering wheel
MD32-F - 1A0042098J	**UC168** - 1A0039432A	5,2	87 kgm 7565 lbs. in		
MD32-F - 1A0042098J	**UC215** - 1A0039433C	6,7	111 kgm 9642 lbs. in		
MD40-F - 1A0042102W	**UC215** - 1A0039433C	5,3	111 kgm 9642 lbs. in		
MD40-F - 1A0042102W	**UC293** - 1A0040246L	7,3	146,5 kgm 12816 lbs. in		

DUAL CYLINDER APPLICATION					
MD32-F - 1A0042098J	2 **UC116** - 1A0039431Y	7,2	52 kgm 5043 lbs. in	1 kit OB-SVS (length selection) 1 kit OB (selez. lunghezza) 1 kit OB-2C130-SVS (length selection)	1 steering wheel
MD40-F - 1A0042102W	2 **UC168** - 1A0039432A	8,4	87 kgm 7565 lbs. in		

NOTE: On tilt applications, replace MD32-F or MD40-F MasterDrive™ kit with MD32-T or MD40-T kit + tilt mechanism X88 - 1A0044006L (optional).
Wheel selection: please refer to the appropriate section.

For a second station add:
1 Kit MD (select kit required by the needed installation)
3 Kit OB-SVS (select length required)

NOTE:
On request, Power Unit wiring harness can be cut to length required.
7 m (23 ft) panel extension cable also available - 1A0042636L


Veratron
kPa 356
10:08 PM
104 °C
LOAD 44 %
F 4460
18 kph
BACK
HEADING ANCHOR
THRUSTER
PORT
STBD
IoT
LINK NMEA
NMEA 2000
ULTRAFLEX

Integra™ EPS
Inboard electronic power steering systems

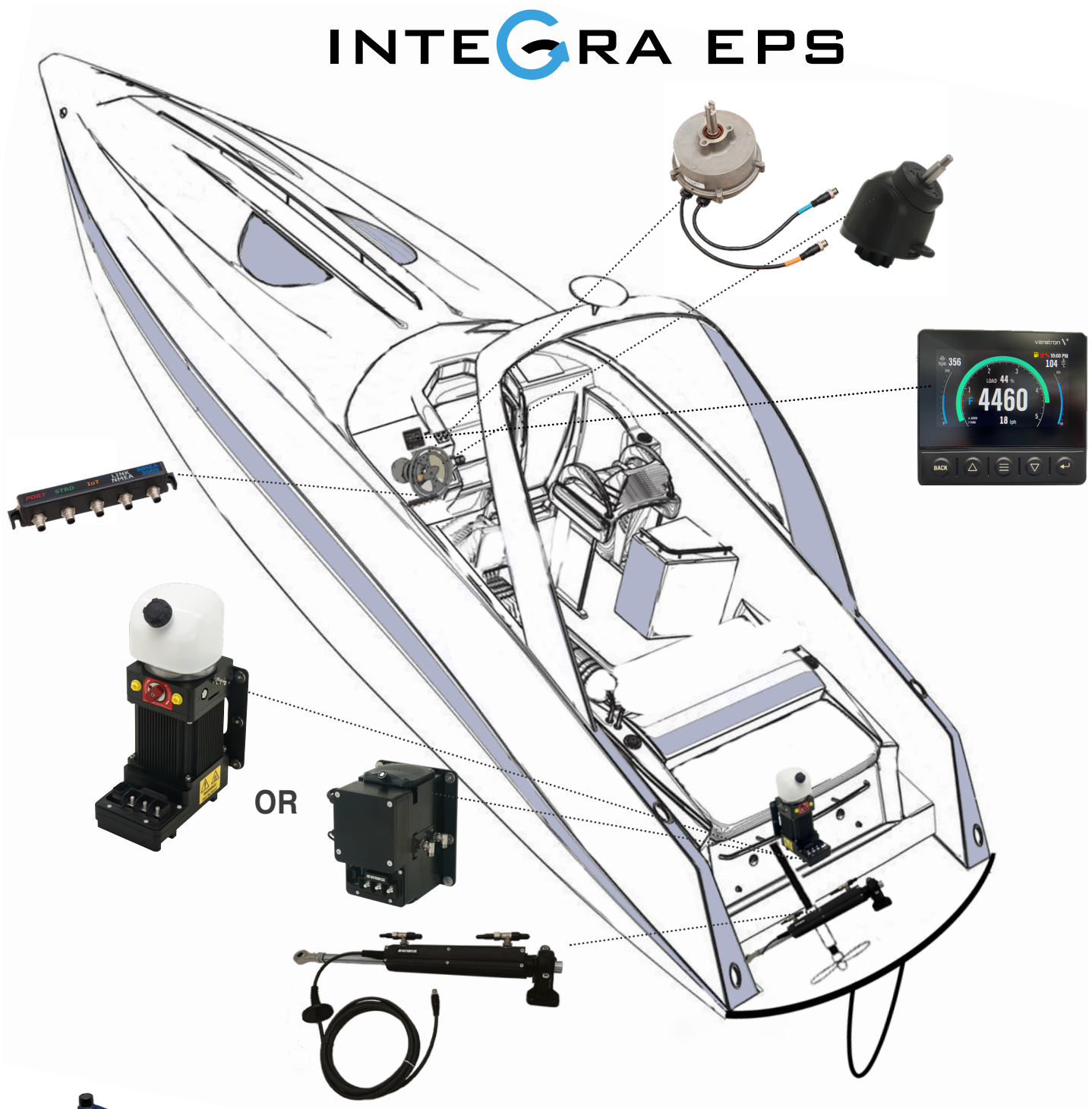







- Great efficiency and quickest response
- Extremely silent
- Redundant waterproof Can bus connection system - Garmin® and Raymarine® Autopilot direct interface
- Very low amperage draw at idle
- Customizable driving mode: Autocruise and Autosport
- Veratron® color display
- Easy installation (simplified configuration)

INTEGRA JS

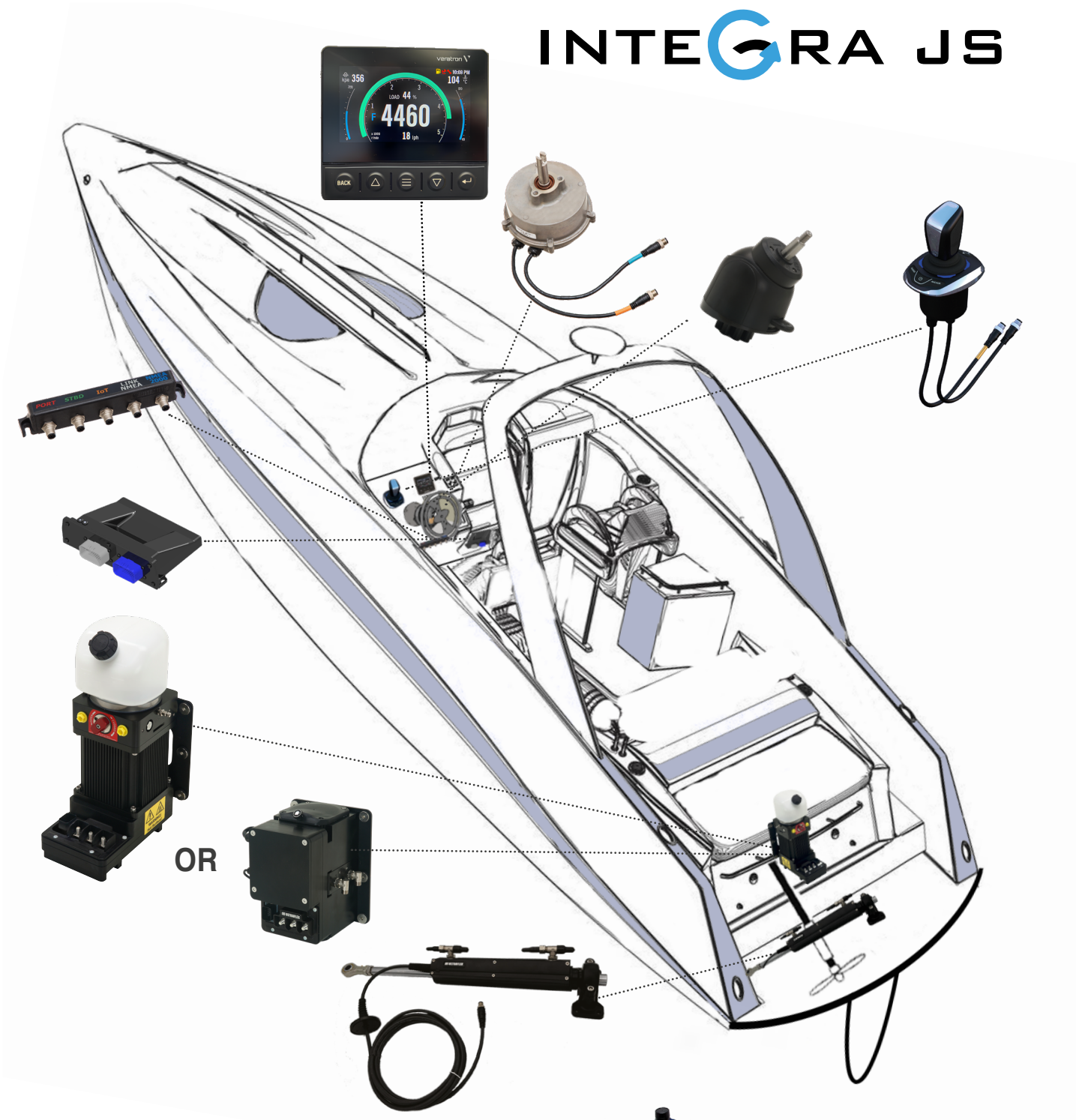

- Integra JS adds to Integra EPS functionalities a new level of manoeuvrability, thanks to the Joystick technology.
- JS suitable also for single-engine applications.
- Integra JS is a more intuitive way of driving. Designed for low speed manoeuvring the joystick grants precision and driving comfort and facilitates docking and trailer procedures as the boat can move sideways, diagonally or spin on its own axis
- Includes Boost, Heading, Anchor, Mainstay and Trim function
- Compatible with Sleipner® and Vetus® bow thrusters.



Integra™
Inboard electronic power steering systems

Model	UIP	UIPC
Operating voltage	10,8 V - 14,4 V	
Average current draw	5 A	2 A
Temperature range	-25°C / +77°C	
Nominal voltage	12 VDC	
Max flow	4,8 l/min @ 60 bar (cw & ccw)	4,0 l/min @ 50 bar
Relief valve	120 bar - 1740 PSI	105 bar - 1500 PSI
Pump unit motor	12 VDC Brushless	
Outboard engine installations	Single, dual, triple or quad	
N. of engines per motor pump unit	up to 4	up to 2
Autopilot direct interface	Garmin® Raymarine® Furuno® Simrad®	
Customizable Driving mode	Autocruise and Autosport	
Customizable wheel effort	Yes	
Exceeds Safaty Standards	ISO 25197, ISO 10592, ABYC P21, P24, P27	
Ignition Protected SAE J1171	Yes	

System components	Integra EPS™	Integra JS™
UIH - Tilt mount electronic helm	✓	✓
UJS-B Integra JS joystick	-	✓
UGW-D - Digital Integra JS Gateway	-	✓
UGW-A - Analogic Integra JS Gateway	-	✓
X82 - Adjustable steering wheel tilt mechanism	✓	✓
UID-5 - Veratron display	✓	✓
BCM - Body Control Module – CAN Bus network module	✓	✓
UIP - High Power electro-hydraulic power unit	✓	✓
UIPC - Compact electro-hydraulic power unit	✓	✓
UC120E-I - Heavy duty starboard cylinder with integrated sensor	✓	✓
Tie bar - Please refer to Integra tie bar section	✓	✓
KIT OB-SVS - High pressure Hydraulic hoses with pre crimped fittings	✓	✓
CAN Bus wires - Can Bus power wires	✓	✓
KBD3 - Purging kit with twin spiralled hoses and connectors (optional)	✓	✓
OL460 - 3 one litre hydraulic oil bottles (single bottle - 1A00436467V)	✓	✓

Integra EPS and Integra JS key benefits

- **Redundant electronic steering system**, a reliable way to reduce steering effort, tuning your driving and enhancing steering experience.
- **Powerful output, great efficiency and quickest response** in any situation, thanks to the brushless motor of the pump unit and to the electronic management
- **Extremely silent**
- **Low amperage system**
- Veratron® **colour display**
- **Customizable driving mode:** the user can choose between Autocruise and Autosport driving mode
- **Autopilot direct interface: Garmin®** Reactor™ 40 Steer-by-wire, **Raymarine®** EV-2 SBW**, Furuno®** Navipilot 300**, Simrad®** AP44 e Ap48 con NAC-D
- **Easy installation**, thanks to the simplified configuration and the CAN bus connectionn system.
- **Customizable wheel effort.**
- Wheel effort is programmed to change with engine RPM.
- **Tilt range of 48° and 5 locking positions,** thanks to the **X82** tilt mechanims
- **Easy boat handling,** thanks to the adjustable speed sensitive turns lock to lock
- **The pump unit** is available in **2 versions** to choose from, based on the selected application: **UIP** (High Power electro-hydraulic power unit) and **UIPC** (Compact electro-hydraulic power unit) and **can be positioned anywhere** on the boat
- It's possible to have a no tie-bar configuration, using two motor pump units
- **Automatic Power Selector** to ensure optimal voltage
- Designed for single, dual, triple or quad outboard engines
- Available for multiple steering stations applications
- It can handle up to 4 engines with a single power unit
- Heavy duty steering cylinder with embedded CAN bus position sensor

Integra JS additional functionalities

- **Integra JS** adds to Integra EPS functionalities a new level of manoeuvrability, thanks to the **Joystick technology**
- **Integra JS** is a more **intuitive way of driving.** Designed for **low speed maneuvering**, the Joystick guarantees precision and driving comfort.
- **Integra JS Joystick** includes several functions: **Boost** function used to momentarily increase engine rpm if you need instant thrust, **Heading** function, that gives the ability to maintain the set course, **Anchor** function, to maintain boat position via GPS connection and **MainStay** the combination of the previous functions (**Heading** and **Anchor**). **Anchor, Heading and MainStay** functions needs the presence of **Nav Sensor Veratron®** - 3C0020201Z, **GPS24XD NMEA 2000 Garmin®** o **Hempisphere Vector V200 GNSS Smart**

Caution: This catalog is for informational purposes only. For proper installation, refer to the manuals for the individual components.

Integra™
Inboard electronic power steering systems

UIH1 - Electronic helm

- Electronic steering helm tilt mount**X82** -1A0043817N
- Easy to install, no oil or hydraulic hoses

UIH1 - 1A0043536M - first station electronic helm.
UIH2 - 1A0043537P - second station electronic helm
UIH3 - 1A0043538S - third station electronic helm

- Resistant to harsh marine conditions
- Steering wheel turns can be set by the user.
- Variable steering wheel resistance according to boat speed
- Instant responsiveness
- Redundant architecture with 2 CAN bus channels

UIH1





X82

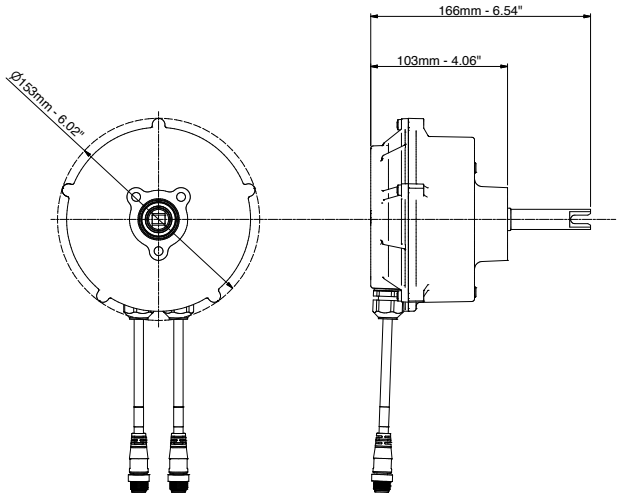

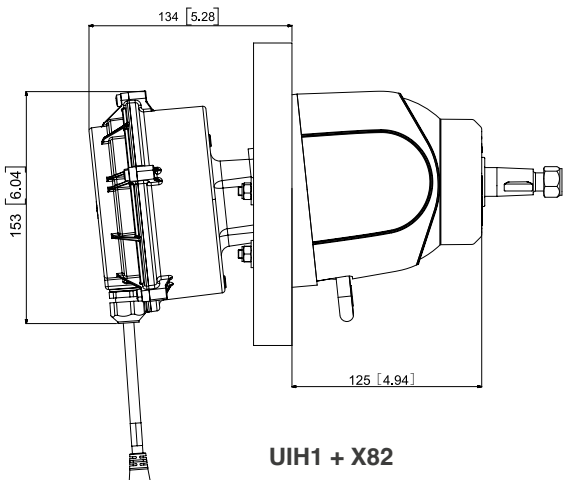

UIH1 + X82

UJS - B Integra JS joystick with Bow Thruster

- Power: turning on the station
- BOOST switch on the handle: momentarily increases engine rpm if you need instant thrust, it is active as long as the switch is pressed
- Signal lights: indicate if the joystick is in Neutral or the set direction
- **Thruster only**: operate bow thruster only
- **Heading**: ability to maintain the set course
- UP and Down trim keys: to be connected to the boat's trims
- **Anchor** function allows boat position to be maintained via GPS connection
- **MainStay** function is activated by pressing the **Heading** and **Anchor** keys
  Anchor, Heading and MainStay function requires Veratron® Nav Sensor - part number 3C0020201Z
- CAN Bus communication via 2 DeviceNet® connectors.

UJS-B1	1A0044162B	Integra JS joystick first station with Bow Thruster
UJS-B2	1A0044163D	Integra JS joystick second station with Bow Thruster



UJS-B

BCM (Body Control Module) - Can Bus Network Module

- Waterproof CAN bus connection system
- Direct interface with Garmin®, Raymarine®, Simrad® and Furuno® autopilot
- Very compact dimensions

BCM	1A0043540C	Can Bus network module



BCM

Integra™
Inboard electronic power steering systems

UGW- Gateway

Device to control throttle and inverter in Honda, Suzuki and Selva outboard engines. It allows management of the trims directly from the joystick.

UGW- D Digital Gateway

UGW-D	1A0043934A	Digital Gateway
UGW-D-U	1A0044083F	Harness for UGW-D digital gateway



UGW-D

UGW- A Analogic Gateway

UGW-A	1A0043985U	Analog Gateway
UGWA	1A0044057E	Harness analog gateway



UGW-A

UID-5 - Veratron® color display

- Veratron® color Display - user adjustable brightness
- Customizable driving mode: the user can choose between
- Autocruise and Autosport driving mode
- Customizable wheel effort.
- Automatic wheel effort setting with engine RPM
- Multiple steering station applications
- Electronic anchor response level setting

UID-5	1A0044276T	Display Veratron®

Display visual information:

- Engine parameters: 1 to 4 engines
- Navigation parameters
- Electronic anchor parameters
- Bow thruster parameters
- Electronic compass
- Tiller angle
- Engines trim angle display
- Tank level
- Battery voltage



UID-5

UIP and UIPC - Power units

- 12 VDC brushless motor
- High power: very short lead times for maximum reactivity
- Embedded automatic power selector to manage the power supply from 2 batteries
- Can be installed anywhere on the boat
- 90° swiveling fittings for easy hose connection
- Tank: 1 litre (0.26 gal) UIP power unit; 0,3 litres (0.08 gal) UIPC power unit
- Vented cap
- Marine anodized aluminum body
- Include the main connector with 1m communication cables
- Ignition Protected SAE J1171



UIP



UIPC

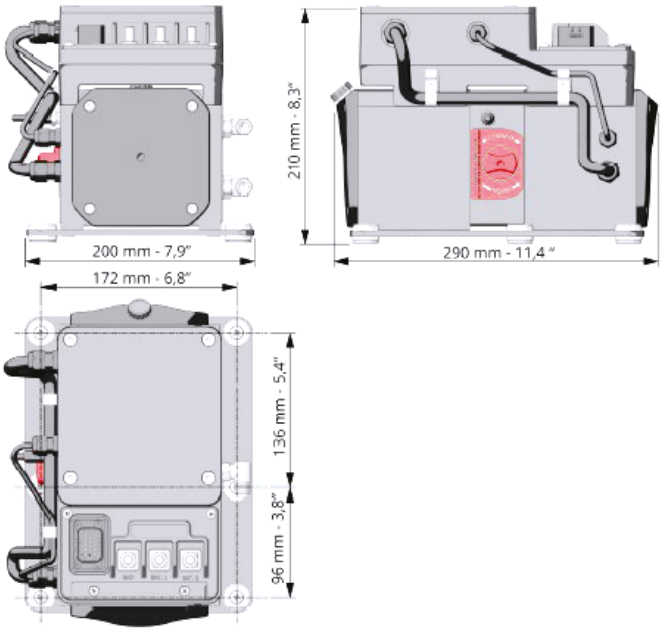

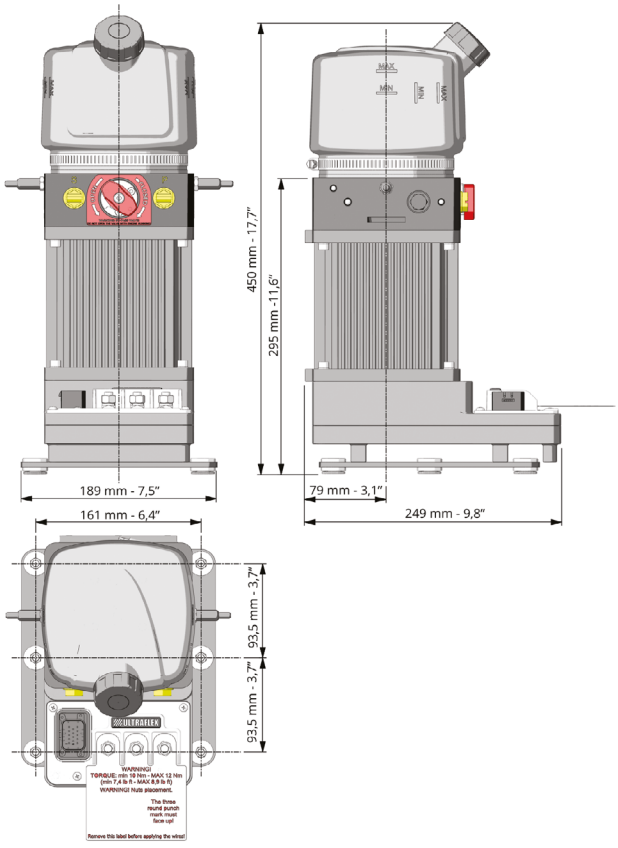

UIP	1A0043541E	High Power Power unit
UIPC	1A0043859N	Compact power unit

UC120E-I Cylinder with integrated sensor

CE



UC120E-I - 1A0044034S

• **UC120E-I:** Heavy-duty cylinder with integrated sensor
Part number - 1A0044034S

Volume	120 cc - 7.5 cu. in
Output force	800 kg - 1764 lbs
Internal diameter	36.5 mm - 1.44”
Stroke	184 mm - 7.24”
Oil	OL460

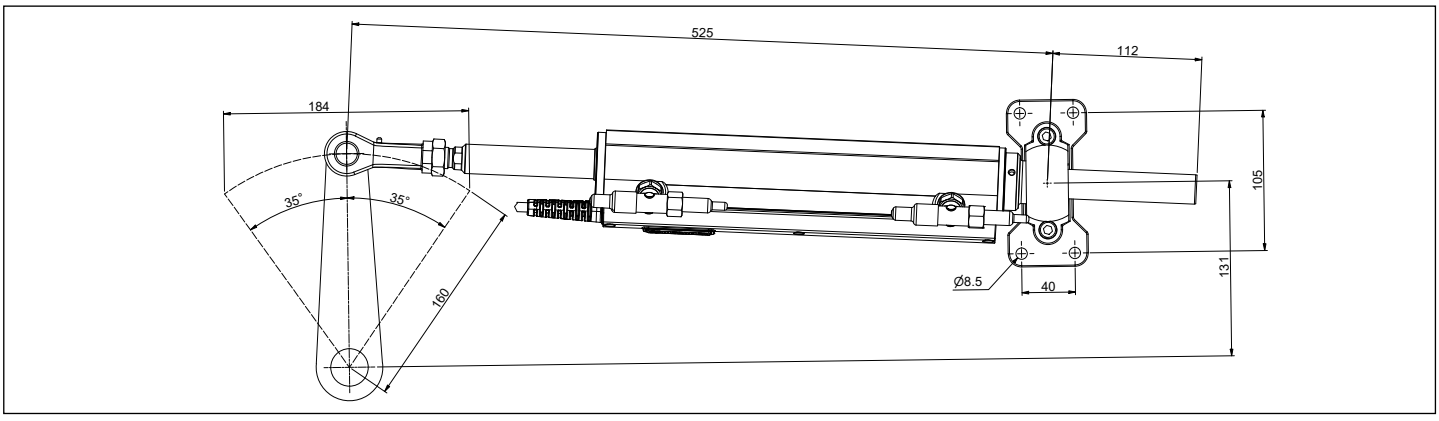

UC120E-I DIMENSIONS

Single engine, single cylinder, single power unit

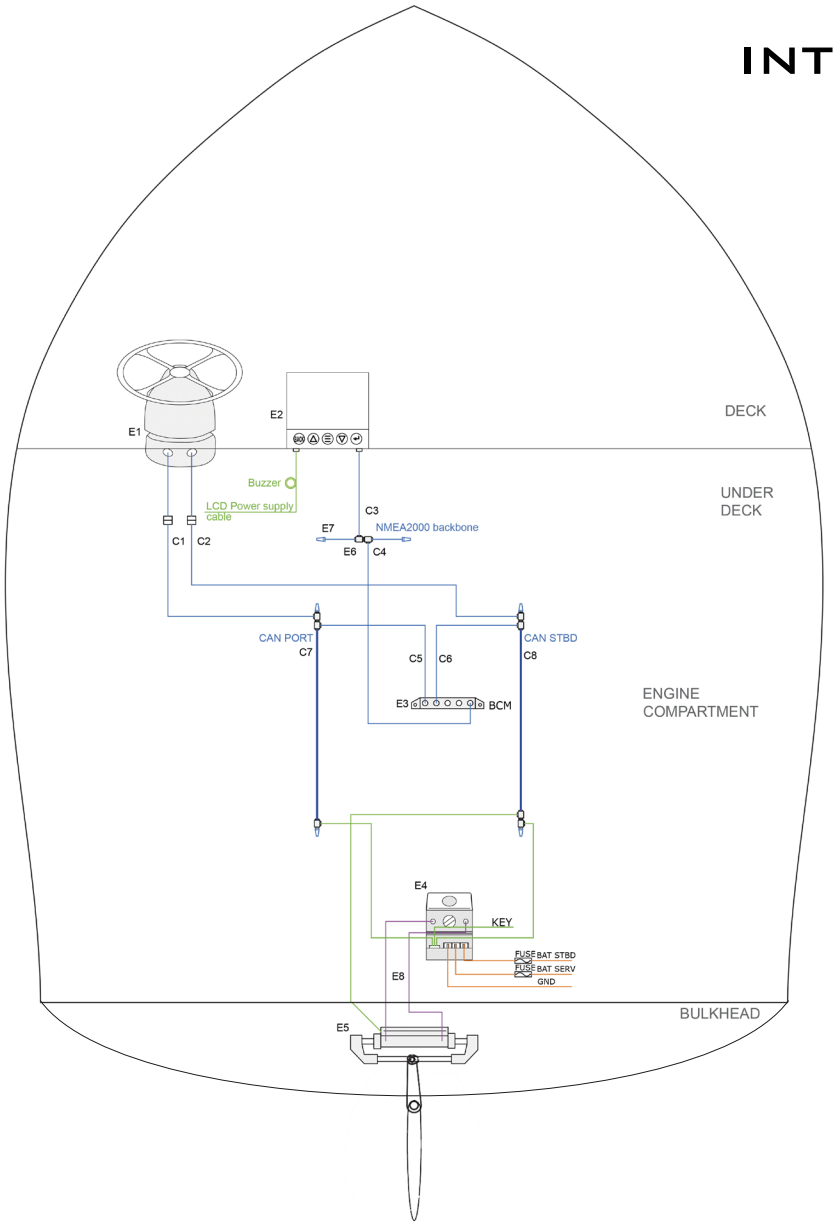

Main components

Name	Description	Quantity
E1	UIH1 Electronic helm - 1A0043536M	**1**
E1	X82 Tilt mechanism - 1A0043187N	**1**
E2	UID-5 - Veratron display - 1A0044276T	**1**
E3	BCM - Body control module - 1A0043540C	**1**
E4	UIPC compact power unit - 1A0043859N	**1**
E5	UC120E-I Cylinder with sensor included - 1A0044034S	**1**
E6	CAN bus - Tee connection - 1A0043578E	**9**
E7	CAN bus - Terminator pair - 1A0043576A	**3**
C1-C6	CAN-bus Drop cables - length on request	**6**
C7-C8	CAN-bus Trunk cables - length on request	**2**
KIT OB-SVS	Hydraulic hoses kit - length on request	**1**

NOTE: This configuration is intended for illustrative purposes only. For specific references regarding installations with your own engines, please refer to the component installation manuals.

Integra™ JS for inboard
Applications

Single engine, single cylinder, single control unit, with bow thruster

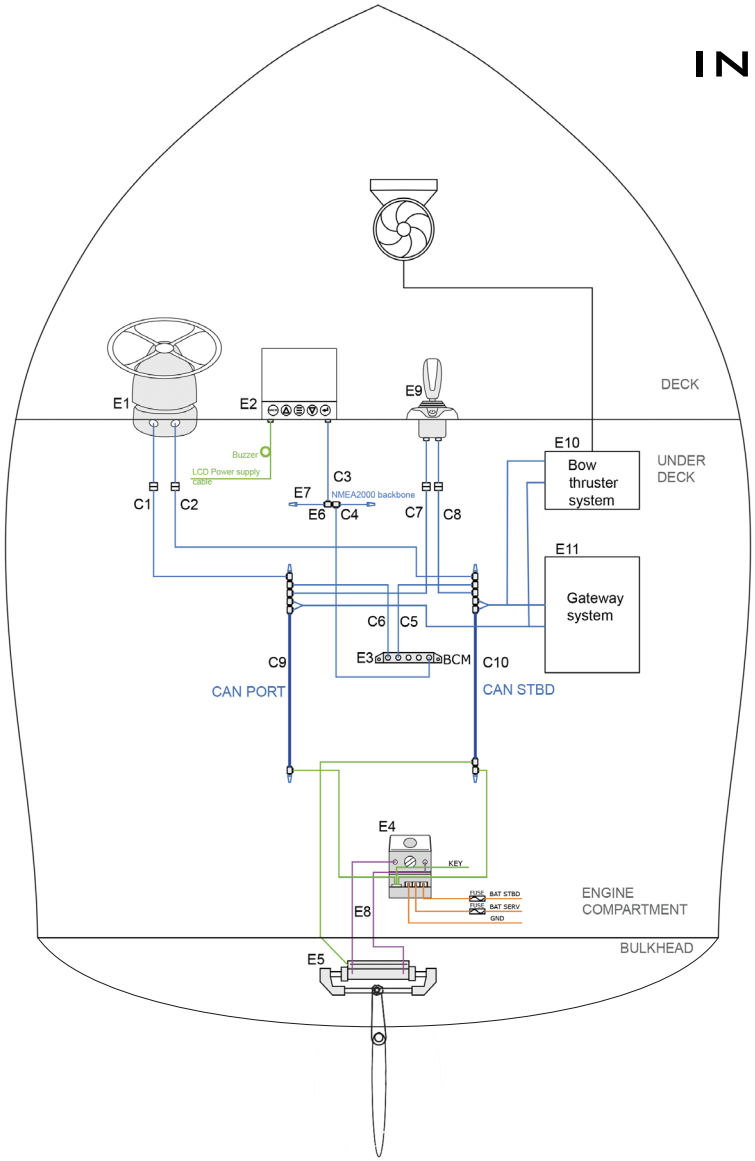

Main components

Name	Description	Quantity
E1	UIH1 Electronic helm - 1A0043536M	**1**
E1	X82 Tilt mechanism - 1A0043187N	**1**
E2	UID-5 - Veratron display - 1A0044276T	**1**
E3	UJS-B joystick - 1A0044162B	**1**
E4	Gateway	**1**
E5	BCM - Body control module - 1A0043540C	**1**
E6	UIPC compact power unit - 1A0043859N	**1**
E7	UC120E-I Cylinder with sensor included - 1A0044034S	**1**
E9	CAN bus - Tee connection - 1A0043578E	**12**
E10	CAN bus - Terminator pair - 1A0043576A	**3**
C1-C8	CAN-bus Drop cables - length on request	**8**
C9-C10	CAN-bus Trunk cables - length on request	**2**
KIT OB-SVS	Hydraulic hoses kit - length on request	**1**

NOTE: This configuration is intended for illustrative purposes only. For specific references regarding installations with your own engines, please refer to the component installation manuals.



V32 - V33 -V45
Composite steering wheels



V32B - Ø 335 mm (13.2”)



V32W - Ø 335 mm (13.2”)



V33B - Ø 342 mm (13.4”)



V45B - Ø 280 mm (11”)



V45W - Ø 280 mm (11”)



V45G - Ø 280 mm (11”)

Model	V32	V33B	V45
Depth	92 mm (3.62”)	105 mm (4.1”)	82 mm (3.2”)
Grip material	Thermoplastic antishock material		
Grip color	Black, white	Black	Black, white, grey
Spokes	Thermoplastic antishock material		
Floating cap	n.a.		
Standard 3/4” hub	Included		
QDH hub	n.a.		
Certifications & standards	CE, UKCA, NMMA; ISO 23411 & ABYC P22		

Model	Part No.	Description
V32B	1A0035458X	Black thermoplastic antishock grip and spokes
V32W	1A0035509R	White t thermoplastic antishock grip and spokes
V33B	1A0035819L	Black thermoplastic antishock grip and spokes
V45B	1A0037920H	Black thermoplastic antishock material grip and spokes
V45W	1A0038049P	White thermoplastic antishock material grip and spokes
V45G	1A0039291J	Grey thermoplastic antishock material grip and spokes



V38B - Ø 350 mm (13.8”)



V60B - Ø 350 mm (13.8”)



V19 B/B - Ø 350 mm (13.8”)



V19 B/PB - Ø 350 mm (13.8”)

Model	V38B	V60B	V19
Depth	85 mm (3.3”)		93 mm (3.66”)
Grip material	Thermoplastic antishock material		
Grip color	Black		
Spokes	Thermoplastic antishock material		
Floating cap	n.a.		
Standard 3/4” hub	Included		
QDH hub	n.a.		
Certifications & standards	CE, UKCA, NMMA; ISO 23411 & ABYC P22		

Model	Part No.	Description
V38B	1A0036517Q	Black thermoplastic antishock grip and spokes
V60B	1A0039189U	Black thermoplastic antishock material grip and spokes
V19 B/B	1A0044264K	Black soft touch grip, embossed black inserts
V19 B/PB	1A0044115S	Black soft touch grip, polished black inserts

V19
Soft touch grip steering wheels

new



V19 B/PG - Ø 350 mm (13.8”)



V19 B/MB - Ø 350 mm (13.8”)



V19 B/MT - Ø 350 mm (13.8”)



V19 B/VE- Ø 350 mm (13.8”)

Model	V19
Depth	93 mm (3.66”)
Grip material	Plastic
Grip color	Black
Spokes	Thermoplastic anti-shock material with inserts
Floating cap	Available upon request
Standard 3/4” hub	Included
QDH hub	n.a.
Certifications & standards	CE, UKCA, NMMA; ISO 23411 & ABYC P22

Model	Part No.	Description
V19 B/PG	1A00000176	Black soft touch grip, polished grey inserts
V19 B/MB	1A0044156G	Black soft touch grip, matte black inserts
V19 B/MT	1A0044157J	Black soft touch grip, matte titanium inserts
V19 B/VE	1A0044158L	Black soft touch grip, silver painted inserts

V16
Soft touch grip steering wheels



V16 B/B - Ø 350 mm (13.8”)



V16 B/G - Ø 350 mm (13.8”)



V16 G/B - Ø 350 mm (13.8”)



V16 W/W - Ø 350 mm (13.8”)

Model	V16
Depth	90 mm (3.54”)
Grip material	Plastic
Grip color	Black
Spokes	Thermoplastic anti-shock material
Floating cap	Available upon request
Standard 3/4” hub	Included
QDH hub	n.a.
Certifications & standards	CE, UKCA, NMMA; ISO 23411 & ABYC P22

Model	Part No.	Description
V16 B/B	1A0044272J	Black soft touch grip, black spokes
V16 B/G	1A0044273L	Black soft touch grip, gray spokes
V16 G/B	1A0044274N	Gray soft touch grip, black spokes
V16 W/W	1A0044275R	White soft touch grip, white spokes

V99 - Portofino
Soft touch grip steering wheels



V99 B/B/CH - Ø 350 mm (13.8”)



V99 B/CH/CH - Ø 350 mm (13.8”)



V99 B/CB/CB - Ø 350 mm (13.8”)



Model	Portofino
Depth	78 mm (3”)
Grip material	Thermoplastic antishock material
Grip color	Black
Spokes	Thermoplastic antishock material with inserts
Floating cap	n.a.
Standard 3/4” hub	Included
QDH hub	n.a.
Certifications & standards	CE, UKCA, NMMA; ISO 23411 & ABYC P22

Model	Part No.	Description
V99 B/B/CH	1A0043015G	Black soft touch grip, chrome plated inserts and black cover
V99 B/CB/CB	1A0043405W	Black soft touch grip, carbon look inserts and cover
V99 B/CH/CH	1A0043016J	Black soft touch grip, chrome plated inserts and cover

Corsica
Soft touch grip steering wheels



Corsica B/S - Ø 350 mm (13.8”)



Corsica B/B - Ø 350 mm (13.8”)



Corsica W/S - Ø 350 mm (13.8”)

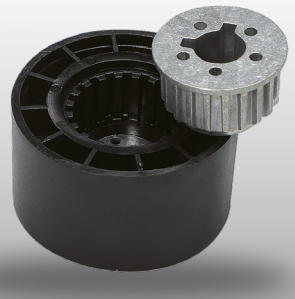

X63

Model	Corsica
Depth	88 mm (3.46”)
Grip material	Soft touch
Grip color	Black, white
Spokes	Silver or black anodized aluminum
Floating cap	n.a.
Standard 3/4” hub	**X63 -** 1A0040119D - not included
QDH hub	Available upon request
Certifications & standards	CE, UKCA, NMMA; ISO 23411 & ABYC P22

Model	Part No.	Description
Corsica B/S	1A0038333O	Black soft touch grip, silver aluminum spokes
Corsica B/B	1A0038332N	Black soft touch grip, black aluminum spokes
Corsica W/S	1A0038334P	White soft touch grip, silver aluminum spokes
X63	1A0040119D	Standard hub

Nisida - Palmaria - Capraia
Polyurethane grip steering wheels



Nisida B/S - Ø 350 mm (13.8”)



Nisida B/B - Ø 350 mm (13.8”)



Palmaria B/B - Ø 350 mm (13.8”)



Capraia B/S - Ø 350 mm (13.8”)

Model	Nisida	Palmaria	Capraia
Depth	85 mm (3.35”)	88 mm (3.46”)	84 mm (3.3”)
Grip material	Leather look polyurethane		
Grip color	Black		
Spokes	Silver or black anodized aluminum		
Floating cap	n.a.		
Standard 3/4” hub	**X63** - 1A0040119D not included		
QDH hub	Available upon request		
Certifications & standards	CE, UKCA, NMMA; ISO 23411 & ABYC P22		

Model	Part No.	Description
Nisida B/S	1T0061813P	Black polyurethane grip, silver aluminum spokes
Nisida B/B	1T0061812M	Black polyurethane grip, black aluminum spokes
Palmaria B/B	1T0063727H	Black polyurethane grip, black aluminum spokes
Capraia B/S	1T0022958X	Black polyurethane grip, silver aluminum spokes

Tavolara - Domino - Pianosa
Polyurethane grip steering wheels



Tavolara B/S/CH - Ø 350 mm (13.8”)



Domino B/S - Ø 350 mm (13.8”)



Pianosa B/S - Ø 350 mm (13.8”)



Pianosa B/B - Ø 350 mm (13.8”)

Model	Tavolara	Domino	Pianosa
Depth	89 mm (3.5”)	88 mm (3.46”)	88 mm (3.46)
Grip material	Leather look polyurethane		
Grip color	Black		
Spokes	Silver or black anodized aluminum		
Floating cap	n.a.		
Standard 3/4” hub	**X63** - 1A0040119D not included		
QDH hub	Available upon request		
Certifications & standards	CE, UKCA, NMMA; ISO 23411 & ABYC P22		

Model	Part No.	Description
Tavolara B/S/CH	1T0065277N	Black polyurethane grip, silver aluminum spokes, chrome plated cover
Domino B/S	1T0023895E	Black polyurethane grip, silver aluminum spokes and ring
Pianosa B/S	1T0022322Y	Black polyurethane grip, silver aluminum spokes, polished aluminum ring
Pianosa B/B	1T0022960H	Black polyurethane grip, black aluminum spokes, black aluminum ring

Manna
Polyurethane grip steering wheels



Meloria B/S - Ø 350 mm (13.8”)



Meloria B/B/CH - Ø 350 mm (13.8”)



Manna B/B/B - Ø 350 mm (13.8”)



Manna B/B/CB - Ø 350 mm (13.8”)

Model	Meloria	Manna
Depth	90 mm (3.54”)	98 mm (3.85”)
Grip material	Polyurethane	
Grip color	Black	
Spokes	Black anodized aluminum	Black anodized stainless steel
Floating cap	n.a.	
Standard 3/4” hub	**X63 -** 1A0040119D not included	Included
QDH hub	Available upon request	
Certifications & standards	CE, UKCA, NMMA; ISO 23411 & ABYC P22	

Model	Part No.	Description
Meloria B/S	1T0026268S	Black polyurethane grip, silver aluminum spokes
Meloria B/B/CH	1T0026269U	Black polyurethane grip, black aluminuml spokes, chrome cover
Manna B/B/B	1T0025896T	Black polyurethane grip, black stainless steel spokes
Manna B/B/CB	1T0026097R	Black polyurethane grip, black stainless steel spokes, carbon look cover

Giglio
Polyurethane grip steering wheels

CHRISTIANGRANDE DesignWorks



Giglio B/S/PB - Ø 350 mm (13.8”)



Giglio B/SS/PB - Ø 350 mm (13.8”)

CHRISTIANGRANDE DesignWorks



Giglio B/B/VE - Ø 350 mm (13.8”)



Giglio B/B/PB - Ø 350 mm (13.8”)

Model	Giglio
Depth	88 mm (3.46”)
Grip material	Leather look polyurethane
Grip color	Black
Spokes	Chrome or black aluminum or stainless steel
Floating cap	n.a.
Standard 3/4” hub	Included
QDH hub	Available upon request
Certifications & standards	CE, UKCA, NMMA; ISO 23411 & ABYC P22

Model	Part No.	Description
Giglio B/S/PB	1T0025897V	Black polyurethane grip with polished black inserts, silver aluminum spokes, polished black cover
Giglio B/SS/PB	1T0025898X	Black polyurethane grip with polished black inserts, stainless steel spokes, polished black cover
Giglio B/B/VE	1T0025911K	Black polyurethane grip with silver painted inserts, black aluminum spokes, silver painted cover
Giglio B/B/PB	1T0025943Z	Black polyurethane grip with black painted inserts, black aluminum spokes, black painted cover

Asinara
Polyurethane grip steering wheels



Asinara PU B/S/B - Ø 350 mm (13.8”)



Asinara PU B/B/B - Ø 350 mm (13.8”)



Asinara V B/SS/L - Ø 350 mm (13.8”)

Model	Asinara
Depth	89 mm (3.5”)
Grip material	Leather look polyurethane
Grip color	Black
Spokes	Silver or black anodized aluminum or SS
Floating cap	Available upon request
Standard 3/4” hub	**X63 -** 1A0040119D not included
QDH hub	Available upon request
Certifications & standards	CE, UKCA, NMMA; ISO 23411 & ABYC P22

Model	Part No.	Description
Asinara PU B/S/B	1T0024730A	Black polyurethane grip, silver aluminum spokes, stainless steel cover
Asinara PU B/B/B	1T0024731C	Black polyurethane grip, black aluminum spokes, stainless steel cover
Asinara V B/SS/L	1T0024732E	Black vinyl grip, stainless steel spokes, stainless steel cover

Montecristo
Polyurethane grip steering wheels



Montecristo B/SS/CH - Ø 350 mm (13.8”)



Montecristo B/S/S - Ø 350 mm (13.8”)



Montecristo B/B/CH - Ø 350 mm (13.8”)



Montecristo B/B/P/CH - Ø 350 mm (13.8”)

Model	Montecristo
Depth	SS spokes 96 mm (3.78”) aluminum spokes 98 mm (3.86”)
Grip material	Leather look polyurethane
Grip color	Black
Spokes	Polished 304 stainless steel or silver or black anodized aluminum
Center cap	Chrome plated, or silver, or black painted
Floating cap	Available upon request
Standard 3/4” hub	**X63** - 1A0040119D - not included
QDH hub	Available upon request
Certifications & standards	CE, UKCA, NMMA; ISO 23411 & ABYC P22

Model	Part No.	Description
Montecristo B/SS/CH	1T0020470D	Black polyurethane grip, stainless steel spokes, black cover
Montecristo B/S/S	1T0020350T	Black polyurethane grip, silver aluminum spokes, black cover
Montecristo B/B/CH	1T0020351V	Black polyurethane grip, black aluminum spokes, black cover
Montecristo B/B/P/CH	1T0023590F	Black polyurethane grip, black aluminum spokes with chrome plated inserts

Ustica - Levanzo
Polyurethane grip steering wheels



Ustica B/S/B - Ø 330 mm (13”)



Ustica B/B/B - Ø 330 mm (13”)



Levanzo B/S/CH - Ø 330 mm (13”)



KNOB UST

Model	Ustica	Levanzo
Depth	90 mm (3.54”)	90 mm (3.54”)
Grip material	Leather look PUR	Leather look PUR with chrome plated inserts
Grip color	Black	
Spokes	Silver or black anodized aluminum	Silver anodized aluminum
Floating cap	n.a.	n.a.
Standard 3/4” hub	**X63 -** 1A0040119D not included	
QDH hub	Available upon request	
Certifications & standards	CE, UKCA, NMMA; ISO 23411 & ABYC P22	

Model	Part No.	Description
Ustica B/S/B	1T0020926X	Black polyurethane grip, silver aluminum spokes, black cover
Ustica B/B/B	1T0021622F	Black polyurethane grip, black aluminum spokes, black cover
Levanzo B/S/CH	1T0020927Z	Black polyurethane grip with chrome plated inserts, silver aluminum spokes, chrome plated cover
KNOB UST	1T0021721H	Knob for Ustica and Levanzo steering wheels



Pantelleria B/S - Ø 320 mm (12.6”)



Pantelleria B/B - Ø 320 mm (12.6”)



Giannutri PU B/SS - Ø 280 mm (11”)



Giannutri PU W/SS - Ø 280 mm (11”)

Model	Pantelleria	Giannutri
Depth	90 mm (3.58”)	69 mm (2.7”)
Grip material	Leather look polyurethane	Leather look polyurethane
Grip color	Black	Black, white
Spokes	Silver or black anodized aluminum	Polished stainless steel
Floating cap	n.a.	
Standard 3/4” hub	**X63 -** 1A0040119D not included	
QDH hub	Available upon request	
Certifications & standards	CE, UKCA, NMMA; ISO 23411 & ABYC P22	

Model	Part No.	Description
Pantelleria B/S	1T0022232X	Black polyurethane grip, silver aluminum spokes
Pantelleria B/B	1T0025102Z	Black polyurethane grip, black aluminum spokes
Giannutri PU B/SS	1T0023477P	Black polyurethane grip, stainless steel spokes, polished alluminum ring
Giannutri PU W/SS	1T0023476H	White polyurethane grip, stainless steel spokes, polished alluminum ring

Gallinara
Vinyl or polyurethane grip steering wheels



Gallinara V B/SS - Ø 320 mm (13.8”)



Gallinara V W/SS - Ø 320 mm (13.8”)



Gallinara PU B/SS - Ø 320 mm (13.8”)

Model	Gallinara
Depth	88 mm (3.46”)
Grip material	Leather look polyurethane
Grip color	Black
Spokes	Chrome stainless steel
Floating cap	n.a.
Standard 3/4” hub	Included
QDH hub	Available upon request
Certifications & standards	CE, UKCA, NMMA; ISO 23411 & ABYC P22

Model	Part No.	Description
Gallinara V B/SS	1T0025899Z	Black vinyl grip, stainless steel spokes, black cover
Gallinara V W/SS	1T0025922R	White vinyl grip, stainless steel spokes, white cover
Gallinara PU B/SS	1T0025881D	Black polyurethane grip, stainless steel spokes, black cover





Razzoli M/SS/BR - Ø 350 mm (13.8”)





Capri - Ø 320 mm (12.6”)

Model	Razzoli	Capri
Depth	85,5 mm (3.37”)	87 mm (3.43”)
Grip material	Mahogany wood	
Grip color	Mahogany wood	
Spokes	Stainless steel	Silver anodized aluminum
Floating cap	Available Upon request	n.a.
Standard 3/4” hub	Included	**X63 -** 1A0040119D not included
QDH hub	Available upon request	
Certifications & standards	CE, UKCA, NMMA; ISO 23411 & ABYC P22	

Model	Part No.	Description
Razzoli M/SS/BR	1T0023612N	Mahogany grip, stainless steel spokes, burl cover
Capri	1T0062465Y	Mahogany grip, silver aluminum spokes

V76
Polyurethane grip equidistant spoke steering wheels - hub included



V76 B/VE - Ø 320 mm (12.6”)



V76 B/PB - Ø 320 mm (12.6”)



V76 B/CH - Ø 320 mm (12.6”)



V76 B/VE

Model	V76
Depth	92 mm (3.62”)
Grip material	Leather look polyurethane
Grip color	Black
Spokes	Coated metal body
Floating cap	n.a.
Standard 3/4” hub	Included
QDH hub	n.a.
Certifications & standards	CE, UKCA, NMMA; ISO 23411 & ABYC P22

Model	Part No.	Description
V76 B/VE	1T0025915U	Black polyurethane grip, silver spokes, black cover
V76 B/PB	1T0025916W	Black polyurethane grip, polished black spokes, black cover
V76 B/CH	1T0025977T	Black polyurethane grip, chrome painted spokes, black cover

V76
Polyurethane grip equidistant spoke steering wheels - hub included

new



V76 B/MB - Ø 320 mm (12.6”)

new



V76 B/CB - Ø 320 mm (12.6”)



V76 W/VE - Ø 320 mm (12.6”)



V76 B/CB

Model	V76
Depth	92 mm (3.62”)
Grip material	Leather look polyurethane
Grip color	Black
Spokes	Coated metal body
Floating cap	n.a.
Standard 3/4” hub	Included
QDH hub	n.a.
Certifications & standards	CE, UKCA, NMMA; ISO 23411 & ABYC P22

Model	Part No.	Description
V76 B/MB	1T0026017P	Black polyurethane grip, matte black spokes, black cover
V76 B/CB	1T0026042N	Black polyurethane grip, carbon look spokes, black cover
V76 W/VE	1T0025927B	White polyurethane grip, silver spokes, white cover

V52 - V28 - V31
Polyurethane grip equidistant spoke steering wheels - hub included



V52B - Ø 320 mm (12.6”)



V52W - Ø 320 mm (12.6”)



V52G - Ø 320 mm (12.6”)



V31B - Ø 320 mm (12.6”)



V28B - Ø 280 mm (11”)

Model	V52	V28	V31
Depth	70 mm (2.76”)	65 mm (2.26”)	75 mm (2.95)
Grip material	Polyurethane		
Grip color	Black, white, grey	Black	
Spokes	Stainless steel		
Floating cap	n.a.		
Standard 3/4” hub	Included		
QDH hub	n.a.		
Certifications & standards	CE, UKCA, NMMA; ISO 23411 & ABYC P22		

Model	Part No.	Description
V52B	3A0040631P	Black polyurethane grip, SS spokes
V52W	3A0040633U	White polyurethane grip, SS spokes
V52G	3A0040632S	Grey polyurethane grip, SS spokes
V31B	3A0043006F	Black polyurethane grip, SS spokes
V28B	3A0042502N	Black polyurethane grip, SS spokes

V70
Polyurethane grip, equidistant spoke steering wheels - hub included



V70B - Ø 350 mm (13.8”)



V70W - Ø 350 mm (13.8”)



V70G - Ø 350 mm (13.8”)

Model	V70
Depth	93 mm (3.66”)
Grip material	Polyurethane
Grip color	Black, white, grey
Spokes	Stainless steel
Floating cap	n.a.
Standard 3/4” hub	Included
QDH hub	n.a
Certifications & standards	CE, UKCA, NMMA; ISO 23411 & ABYC P22

Model	Part No.	Description
V70B	1T0039442D	Black polyurethane grip, stainless steel spokes
V70W	1T0039929J	White polyurethane grip, stainless steel spokes
V70G	1T0039441B	Gray polyurethane grip, stainless steel spokes

V75
Polyurethane grip equidistant spoke steering wheels - hub included



V75 B/VE - Ø 350 mm (12.6”)



V75 B/PB - Ø 350 mm (12.6”)



V75 W/VE - Ø 350 mm (12.6”)



V75 W/VE

Model	V75
Depth	98 mm (3.85”)
Grip material	Leather look polyurethane
Grip color	Black or White
Spokes	Coated metal body
Floating cap	n.a.
Standard 3/4” hub	Included
QDH hub	n.a.
Certifications & standards	CE, UKCA, NMMA; ISO 23411 & ABYC P22

Model	Part No.	Description
V75 B/VE	1T0025917Y	Black polyurethane grip, silver spokes, black cover
V75 B/PB	1T0025918A	Black polyurethane grip, polished black spokes, black cover
V75 W/VE	1T0025928D	White polyurethane grip, silver spokes, white cover

V75
Polyurethane grip equidistant spoke steering wheels - hub included

new



V75 B/CH - Ø 350 mm (12.6”)



V75 B/MB - Ø 350 mm (12.6”)

new



V75 B/CB - Ø 350 mm (12.6”)



V75 B/CB

Model	**V75**
Depth	98 mm (3.85”)
Grip material	Leather look polyurethane
Grip color	Black
Spokes	Coated metal body
Floating cap	n.a.
Standard 3/4” hub	Included
QDH hub	n.a.
Certifications & standards	CE, UKCA, NMMA; ISO 23411 & ABYC P22

Model	Part No.	Description
V75 B/CH	1T0025976R	Black polyurethane grip, chrome spokes, black cover
V75 B/MB	1T0026015K	Black polyurethane grip, matte black spokes, black cover
V75 B/CB	1T0026041L	Black polyurethane grip, carbon look spokes, black cover

V56
Polyurethane grip, equidistant spoke steering wheels - hub included

new



V56 B/CH - Ø 350 mm (13.8”)



V56 B/PB - Ø 350 mm (13.8”)



V56 W/CH - Ø 350 mm (13.8”)



V56 G/CH - Ø 350 mm (13.8”)



KNOB/V56

Model	V56
Depth	95 mm (3.74”)
Grip material	Polyurethane
Grip color	Black, white, grey, soft blue
Spokes	Polyurethane with inserts
Floating cap	n.a.
Standard 3/4” hub	Included
QDH hub	n.a.
Certifications & standards	CE, UKCA, NMMA; ISO 23411 & ABYC P22

Model	Part No.	Description
V56 B/CH	1T0021351A	Black polyurethane grip and spokes with chrome plated inserts
V56 B/PB	1T00000115	Black polyurethane grip and spokes with polish black inserts
V56 W/CH	1T0021406Z	White polyurethane grip and spokes with chrome plated inserts
V56 G/CH	1T0021407B	Gray polyurethane grip and spokes with chrome plated inserts
Knob/V56	1T0023600F	Knob for V56 steering wheels ordered as retrofit

V57
Polyurethane grip equidistant spoke steering wheels - hub included



V57B - Ø 350 mm (13.8”)

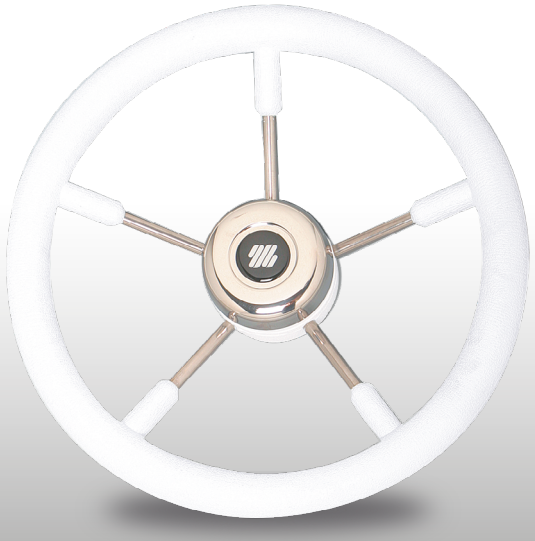

V57W - Ø 350 mm (13.8”)

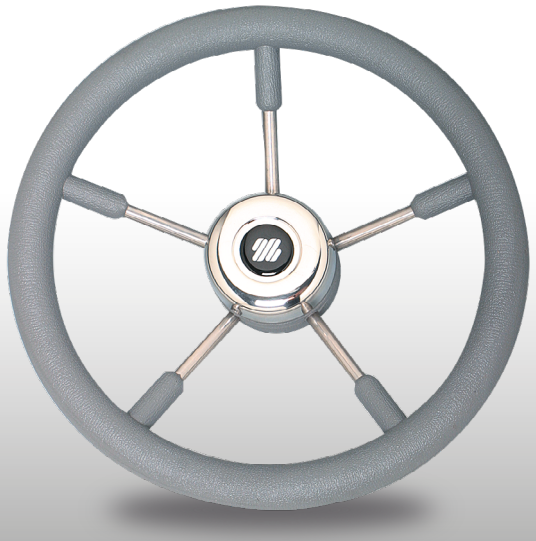

V57G - Ø 350 mm (13.8”)

Model	V57
Depth	76 mm (2.99”)
Grip material	Polyurethane
Grip color	Black, white, grey
Spokes	Stainless steel
Floating cap	n.a.
Standard 3/4” hub	Included
QDH hub	n.a.
Certifications & standards	CE, UKCA, NMMA; ISO 23411 & ABYC P22

Model	Part No.	Description
V57B	3A0038155O	Black polyurethane grip, stainless steel spokes
V57W	3A0038157Q	White polyurethane grip, stainless steel spokes
V57G	3A0038156P	Grey polyurethane grip, stainless steel spokes

V78
Polyurethane grip equidistant spoke steering wheels - hub included



V78 B/PB - Ø 350 mm (12.6”)



V78 B/MB - Ø 350 mm (12.6”)



V78 B/VE - Ø 350 mm (12.6”)

Model	**V78**
Depth	98 mm (3.85”)
Grip material	Leather look polyurethane
Grip color	Black or White
Spokes	Coated metal body
Floating cap	Available upon request
Standard 3/4” hub	Included
QDH hub	n.a.
Certifications & standards	CE, UKCA, NMMA; ISO 23411 & ABYC P22

Model	Part No.	Description
V78 B/PB	1T0026258N	Black polyurethane grip, polished black spokes, black cover
V78 B/MB	1T0026259R	Black polyurethane grip, matt black spokes, black cover
V78 B/VE	1T0026260Z	Black polyurethane grip, silver spokes, black cover

V78
Polyurethane grip equidistant spoke steering wheels - hub included



V78 B/CH - Ø 350 mm (12.6”)



V78 B/CB - Ø 350 mm (12.6”)



V78 W/VE - Ø 350 mm (12.6”)

Model	V78
Depth	98 mm (3.85”)
Grip material	Leather look polyurethane
Grip color	Black or White
Spokes	Coated metal body
Floating cap	Available upon request
Standard 3/4” hub	Included
QDH hub	n.a.
Certifications & standards	CE, UKCA, NMMA; ISO 23411 & ABYC P22

Model	Part No.	Description
V78 B/CH	1T0026261B	Black polyurethane grip, chromed spokes, black cover
V78 B/CB	1T0026262D	Black polyurethane grip, carbon look spokes, black cover
V78 W/VE	1T0026263F	White polyurethane grip, silver spokes, white cover

V21 - V01
Polyurethane or stainless steel grip, equidistant spoke steering wheels



V21B - Ø 350 mm (13.8”)



V21W - Ø 350 mm (13.8”)



V01B - Ø 350 mm (13.8”)



V01W - Ø 350 mm (13.8”)



V01SS - Ø 350 mm (13.8”)

Model	V21	V01
Depth	64 mm (2.52”)	67 mm (2.64”)
Grip material	Polyurethane	Polyurethane, stainless steel
Grip color	Black, white	Black, white, stainless steel
Spokes	Stainless steel	
Floating cap	n.a.	
Standard 3/4” hub	Included	
QDH hub	n.a.	
Certifications & standards	CE, UKCA, NMMA; ISO 23411 & ABYC P22	

Model	Part No.	Description
V21B	3A0042328Z	Black polyurethane grip, stainless steel spokes
V21W	3A0042324R	White polyurethane grip, stainless steel spokes
V01B	3A0041687Z	Black polyurethane grip, stainless steel spokes
V01W	3A0041688B	White polyurethane grip, stainless steel spokes
V01SS	3A0041692S	Stainless steel grip and spokes

V25
Polyurethane, mahogany or stainless steel grip, equidistant spoke steering wheels



V25B - Ø 350 mm (13.8”)



V25W - Ø 350 mm (13.8”)



V25SS - Ø 350 mm (13.8”)



V25M - Ø 350 mm (13.8”)

Model	V25
Depth	57 mm (2.24”)
Grip material	Polyurethane, stainless steel, mahogany
Grip color	Black, white, grey, stainless steel, teak
Spokes	Stainless steel
Floating cap	n.a.
Standard 3/4” hub	Included
QDH hub	n.a.
Certifications & standards	CE, UKCA, NMMA; ISO 23411 & ABYC P22

Model	Part No.	Description
V25B	3A0040640R	Black polyurethane grip, stainless steel spokes
V25W	3A0040642V	White polyurethane grip, stainless steel spokes
V25SS	3A0040643X	Stainless steel grip and spokes
V25M	3A0040644Z	Mahogany grip, stainless steel spokes

V10 - V35 - V23 - V65
Stainless steel grip, equidistant spoke steering wheels - hub included



V10SS - Ø 350 mm (13.8”)



V35 - Ø 345 mm (13.6”)



V23 - Ø 400 mm (15.7”)



V65 - Ø 370 mm (14.6”)

Model	V10	V35	V23	V65
Depth	67 mm (2.64”)	100 mm (3.94”)	110 mm (4.33”)	73 mm (2.85”)
Grip material	Stainless steel			
Grip color	Stainless steel			
Spokes	Stainless steel			
Floating cap	n.a.			
Standard 3/4” hub	Included			
QDH hub	n.a.			
Certifications & standards	CE, UKCA, NMMA; ISO 23411 & ABYC P22			

Model	Part No.	Description
V10SS	3A0041699G	Stainless steel grip and spokes
V35	3A0031602H	Stainless steel grip and spokes
V23	3A0032397D	Stainless steel grip and spokes
V65	3A0036436J	Stainless steel grip and spokes

V58 - V53 - V62 - V66
Polyurethane or wood grip, equidistant spoke steering wheels - hub included



V58G - Ø 400 mm (15.7”)



V53B - Ø 450 mm (17.7”)



V62 - Ø 350 mm (13.8”)



V66 - Ø 350 mm (13.8”)

Model	V58	V53	V62	V66
Depth	78 mm (3.07”)	88 mm (3.46”)	104 mm (4.09”)	80 mm (3.15”)
Grip material	Polyurethane		Mahogany	
Grip color	Grey	Black	Mahogany	
Spokes	Stainless steel			
Floating cap	n.a.			
Standard 3/4” hub	Included			
QDH hub	n.a.			
Certifications & standards	CE, UKCA, NMMA; ISO 23411 & ABYC P22			

Model	Part No.	Description
V58G	3A0038650F	Grey polyurethane grip, stainless steel spokes
V53B	3A0040634W	Black polyurethane grip, stainless steel spokes
V62	3A0039263D	Mahogany grip, stainless steel spokes
V66	3A0039424B	Mahogany grip, stainless steel spokes

V67 - V74/40 - V63 - V85
Wood grip equidistant spoke steering wheels



V67 - Ø 400 mm (15.7”)



V74/40- Ø 400 mm (15.7”)



V63 - Ø 450 mm (17.7”)



V85 - Ø 500 mm (19.7”)

Model	V67	V74	V63	V85
Depth	100 mm (3.94”)	63 mm (2.48”)	108 mm (4.25”)	69 mm (2.72”)
Grip material	Mahogany	Mahogany	Mahogany	Teak
Grip color	Mahogany	Mahogany	Mahogany	Teak
Spokes	Stainless steel			
Floating cap	n.a.			
Standard 3/4” hub	Included			
QDH hub	n.a.			
Certifications & standards	CE, UKCA, NMMA; ISO 23411 & ABYC P22			

Model	Part No.	Description
V67	3A0039425D	Mahogany grip, stainless steel spokes
V74/40	3A0041115A	Mahogany grip, stainless steel spokes
V63	3A0039264F	Mahogany grip, stainless steel spokes
V85	3A0042416W	Teak grip, stainless steel spokes

VERO VOLANTE ITALIANO



Boccanegra
Vero Volante Italiano



3-spoke steering wheel.
316L stainless steel polished spokes.
Hand-stitching leather grip.
Leather wrapped, chrome plated or painted cover.
Leather wrapped or painted center cap.

Hub included - standard 3/4” taper

Ø = 350 mm (13.8”)

Depth = 89 mm (3.5”)



Boccanegra L B/L



Boccanegra L W/L



Boccanegra L B/CH



Boccanegra V B/P

Diameter	350 mm (13.8”)
Grip material	Leather and Vynil
Grip color	Black, white
Spokes	Polished 316L stainless steel
Center cap	Leather or painted
Floating cap	n.a.
Standard 3/4” hub	Included
QDH hub	n.a.
Certifications & standards	CE, UKCA, NMMA; ISO 23411 & ABYC P22

Model	Part No.	Description
Boccanegra L B/L	1T0067460P	Black leather grip, stainless steel spokes, black leather cover
Boccanegra L W/L	1T0067295B	White leather grip, stainless steel spokes, white leather cover
Boccanegra L B/CH	1T0020944Z	Black leather grip, stainless steel spokes, chrome plated cover
Boccanegra V B/P	1T0068714A	Black vynil grip, stainless steel spokes, black painted cover

Oderico
Vero Volante Italiano



3-Spoke steering wheel
316L stainless steel spokes with a double treatment: polished and black sandblasted.
Grip is available in black hand-stitching leather or vynil

Hub included - standard 3/4” taper.

Ø = 350 mm (13.8”)

Depth = 75 mm (2.95”)



Oderico L B/SS/CH



Oderico V B/SS/CH



Diameter	350 mm (13.8”)
Grip material	Leather or vinyl
Grip color	Black
Spokes	Polished and black sandblasted 316L SS
Center cap	Chrome plated
Floating cap	Available upon request
Standard 3/4” hub	Included
QDH hub	n.a.
Certifications & standards	CE, UKCA, NMMA; ISO 23411 & ABYC P22

Model	Part No.	Description
Oderico L B/SS/CH	1T0026135W	Black leather grip, stainless steel spokes, black painted cover
Oderico V B/SS/CH	1T0026136Y	Black vinyl grip, stainless steel spokes, black painted cover

Vendramin
Vero Volante Italiano



3 spokes 316L polished stainless steel wheel with metachrilate inserts.
Grip available in:
- Hand-stitched leather
- Hand-stitched vinyl
- Leather look polyurethane

Stainless steel cover, leather or vinyl or pad-printed center cap

Hub included - standard 3/4” taper

Ø = 350 mm (13.8”)

Depth = 97 mm (3.8”)



Vendramin L B/SS/RG



Vendramin V B/SS/PB



Vendramin PU B/SS/RG



Vendramin PU B/SS/PB

Diameter	350 mm (13.8")
Grip material	Leather or vinyl or leather look polyurethane
Grip color	Black
Spokes	Polished 316L SS and inserts
Center cap	Leather or vinyl or pad-printed
Floating cap	Available upon request
Standard 3/4" hub	Included
QDH hub	n.a.
Certifications & standards	CE, UKCA, NMMA; ISO 23411 & ABYC P22

Model	Part No.	Description
Vendramin L B/SS/RG	1T0025894N	Black leather grip, stainless steel spokes, stainless steel cover, rose gold colored inserts
Vendramin V B/SS/PB	1T0025913P	Black vinyl grip, stainless steel spokes, stainless steel cover, polished black inserts
Vendramin PU B/SS/RG	1T0025893L	Black PU grip, stainless steel spokes, stainless steel cover, rose gold colored inserts
Vendramin PU B/SS/PB	1T0025912M	Black PU grip, stainless steel spokes, stainless steel cover, polished black inserts

Vendramin
Vero Volante Italiano



Vendramin L B/MB/PB

3 spokes 316L polished stainless steel wheel with metachrilate inserts.
Grip available in:
- Hand-stitched leather
- Hand-stitched vinyl
- Leather look polyurethane

Stainless steel cover, leather or vinyl or pad-printed center cap

Hub included - standard 3/4” taper

Ø = 350 mm (13.8”)

Depth = 97 mm (3.8”)



Vendramin L B/MB/PB



Vendramin V B/MB/VE



Vendramin PU B/MB/PB



Vendramin PU B/MB/VE

Diameter	350 mm (13.8”)
Grip material	Leather or vinyl or leather look polyurethane
Grip color	Black
Spokes	Polished 316L SS and inserts
Center cap	Leather or vinyl or pad-printed
Floating cap	Available upon request
Standard 3/4” hub	Included
QDH hub	n.a.
Certifications & standards	CE, UKCA, NMMA; ISO 23411 & ABYC P22

Model	Part No.	Description
Vendramin L B/MB/PB	1T0026137A	Black leather grip, stainless steel spokes, stainless steel cover, polished black inserts
Vendramin V B/MB/VE	1T0026138C	Black vinyl grip, stainless steel spokes, stainless steel cover, silver inserts
Vendramin PU B/MB/PB	1T0026139E	Black PU grip, stainless steel spokes, stainless steel cover, polished black inserts
Vendramin PU B/MB/VE	1T0026140N	Black PU grip, sstainless steel spokes, stainless steel cover, silver inserts

Soranzo
Vero Volante Italiano



3-spoke steering wheel.
Polished 316L stainless steel spokes.
Grip is available in hand-stitching leather or vinyl.
Leather wrapped or painted cover, leather or vinyl center cap.

Hub included - standard 3/4” taper

Ø = 350 mm (13.8”)

Depth = 97 mm (3.8”)

Soranzo
Vero Volante Italiano



Soranzo L B/L/L



Soranzo L L/L/L



Soranzo L BL/L/L



Soranzo V B/B/L

Diameter	350 mm (13.8”)
Grip material	Leather or vinyl
Grip color	Black, tan leather, blue
Spokes	Polished 316L stainless steel
Center cap	Leather or vinyl
Floating cap	Available upon request
Standard 3/4” hub	Included
QDH hub	n.a.
Certifications & standards	CE, UKCA, NMMA; ISO 23411 & ABYC P22

Model	Part No.	Description
Soranzo L B/L/L	1T0024725H	Black leather grip, grey stitches, stainless steel spokes, black leather cover
Soranzo L L/L/L	1T0024727M	Tan leather grip, cream stitches, stainless steel spokes, tan leather painted cover
Soranzo L BL/L/L	1T0024726K	Blue leather grip, light blue stitches, stainless steel spokes, blue leather cover
Soranzo V B/B/L	1T0024728P	Black vinyl grip, grey stitches, stainless steel spokes, black painted cover

Barbarigo
Vero Volante Italiano



Barbarigo L B/SS/B

3-spoke steering wheel.
Polished 316L stainless steel spokes.
Grip is available in hand-stitching leather or vinyl.
Polished 316L stainless steel cover, leather or vinyl center cap.

Hub included - standard 3/4” taper

Ø = 350 mm (13.8”)

Depth = 97 mm (3.8”)



Barbarigo L B/SS/B



Barbarigo V B/SS/B



Barbarigo V C/SS/C

Diameter	350 mm (13.8”)
Grip material	Leather or vinyl
Grip color	Black or cream
Spokes	Polished 316L stainless steel
Center cap	Leather or vinyl
Floating cap	Available upon request
Standard 3/4” hub	Included
QDH hub	n.a.
Certifications & standards	CE, UKCA, NMMA; ISO 23411 & ABYC P22

Model	Part No.	Description
Barbarigo L B/SS/B	1T0025895R	Black leather grip, stainless steel spokes, stainless steel cover
Barbarigo V B/SS/B	1T0025932U	Black vinyl grip, stainless steel spokes, stainless steel cover
Barbarigo V C/SS/C	1T0025914S	Cream vinyl grip, stainless steel spokes, stainless steel cover

Fregoso
Vero Volante Italiano



3-spoke steering wheel.
Polished 304 stainless steel spokes.
Grip is available in leather or vinyl in two colours.
Leather wrapped or painted cover, vinyl or painted center cap.

Hub included - standard 3/4” taper

Ø = 350 mm (13.8”)

Depth = 81 mm (3.2”)



Fregoso LV BC/B/C



Fregoso LL BG/B/G



Fregoso LL AW/A/A

Diameter	350 mm (13.8”)
Grip material	Leather, vinyl
Grip color	Black and sand, black and grey, reddish purple and white
Spokes	Polished 304 stainless steel
Center cap	Sand color vinyl or reddish purple painted or grey leather
Floating cap	n.a.
Standard 3/4” hub	Included
QDH hub	Available upon request*
Certifications & standards	CE, UKCA, NMMA; ISO 23411 & ABYC P22

Model	Part No.	Description
Fregoso LV BC/B/C	1T0024739V	Black leather external grip, sand vinyl internal grip, stainless steel spokes, black painted cover
Fregoso LL BG/B/G	1T0025929F	Black leather external grip, gray leather internal grip, stainless steel spokes, black-painted cover
Fregoso LL AW/A/A	1T0024741F	Amaranth leather external grip, white leather internal grip, stainless steel spokes, reddish purple cover

* To be specified when ordering the wheel

Guarco
Vero Volante Italiano



3-spoke steering wheel.
Polished 316L stainless steel spokes.
Hand-stitching leather grip, chrome plated or matt black painted cover.

Hub included - standard 3/4” taper

Ø = 350 mm (13.8”)

Depth = 96 mm (3.8”)



Guarco L B/SS/CH



Guarco L B/SS/B



Guarco L B/SS/B

Diameter	350 mm (13.8”)
Grip material	Leather
Grip color	Black
Spokes	Polished 316L stainless steel
Center cap	Black polished with pad printed logo
Floating cap	Available upon request.
Standard 3/4” hub	Included
QDH hub	n.a.
Certifications & standards	CE, UKCA, NMMA; ISO 23411 & ABYC P22

Model	Part No.	Description
Guarco L B/SS/CH	1T0024737R	Black leather grip, grey stitches, stainless steel spokes, chrome plated cover
Guarco L B/SS/B	1T0024736N	Black leather grip, black stitches, stainless steel spokes, matt black painted cover

Spinola
Vero Volante Italiano



3-spoke steering wheel.
316L stainless steel polished or brushed or black spokes.

Hand-stitching leather or vinyl grip.
Stainless steel cover, leather or vinyl center cap.

Hub included - standard 3/4” taper

Ø = 350 mm (13.8”)

Depth = 82 mm (3.22”)

new



Spinola L B/PB
Spinola V B/PB



Spinola L B/BRU
Spinola V B/BRU



Spinola L B/P
Spinola V B/P

Diameter	350 mm (13.8”)
Grip material	Leather or vinyl
Grip color	Black
Spokes	Polished or brushed or black 316L stainless steel
Center cap	Leather or vinyl
Floating cap	Available upon request
Standard 3/4” hub	Included
QDH hub	n.a.
Certifications & standards	CE, UKCA, NMMA; ISO 23411 & ABYC P22

Model	Part No.	Description
Spinola L B/PB	1T00000051	Black leather grip, polished black spokes and cover
Spinola V B/PB	1T00000052	Black vinyl grip, polished black spokes and cover
Spinola L B/BRU	1T0023900U	Black leather grip, brushed stailess steel spokes and cover
Spinola V B/BRU	1T0023899N	Black vinyl grip, brushed stainless steel spokes and cover
Spinola L B/P	1T0023902Y	Black leather grip, polished stailess steel spokes and cover
Spinola V B/P	1T0023901W	Black vinyl grip, polished stailess steel spokes and cover

Tron
Vero Volante Italiano



Tron L B/SS/PU
Tron V B/SS/PU
Tron PU B/SS/PU

3-spoke steering wheel.
Polished 316L stainless steel spokes.
Hand-stitching leather or vinyl or leather look polyurethane grip.
Black polyurethane cover, chrome plated center cap.

Hub included - standard 3/4” taper

Ø = 350 mm (13.8”)

Depth = 98 mm (3.85”)



Tron L B/SS/PU



Tron V B/SS/PU



Tron PU B/SS/PU

Diameter	350 mm (13.8”)
Grip material	Leather or vinyl or leather look polyurethane
Grip color	Black
Spokes	Polished 316L stainless steel
Center cap	Chrome plated
Floating cap	Available upon request
Standard 3/4” hub	Included
QDH hub	n.a.
Certifications & standards	CE, UKCA, NMMA; ISO 23411 & ABYC P22

Model	Part No.	Description
Tron L B/SS/PU	1T0022125W	Black leather grip, stainless steel spokes, black polyurethane cover
Tron V B/SS/PU	1T0022321W	Black vinyl grip, stainless steel spokes, black polyurethane cover
Tron PU B/SS/PU	1T0022124U	Black polyurethane grip, stainless steel spokes, black polyurethane cover

Dolfin
Vero Volante Italiano



316L stainless steel 3-spoke steering wheel with inserts.
Spokes available in:
- Matt black painted stainless steel and polished black inserts
- Matt black painted stainless steel and pewter effect inserts
- Polished stainless steel and polished black inserts

Hand-stitched leather or vinyl grip.
Black painted cover, polished black or pewter effect ring, matte black lens.

Hub included - standard 3/4” taper

Ø = 350 mm (13.8”)

Depth = 93 mm (3.66”)



Dolfin L B/B/B



Dolfin L B/B/Pw



Dolfin L B/SS/B



Dolfin V B/SS/B

Diameter	350 mm (13.8”)
Grip material	Leather or vinyl
Grip color	Black
Spokes	316L SS polished or black
Center cap	Black
Floating cap	Available upon request
Standard 3/4” hub	Included
QDH hub	n.a.
Certifications & standards	CE, UKCA, NMMA; ISO 23411 & ABYC P22

Model	Part No.	Description
Dolfin L B/B/B	1T0023023T	Black leather grip, SS black spokes with black inserts, black cover
Dolfin L B/B/Pw	1T0023591H	Black leather grip, SS black spokes with pewter look painted inserts, pewter look cover
Dolfin L B/SS/B	1T0069562J	Black leather grip, SS polished spokes with black inserts, black cover
Dolfin V B/SS/B	1T0069561G	Black vinyl grip, SS polished spokes with black inserts, black cover

Morosini
Vero Volante Italiano



Morosini L B/CH/L

3-spoke steering wheel.
Polished 304 stainless steel spokes.
Available grip:
• Hand-stitching leather
• Hand-stitching vinyl
• Mahogany
• Leather look polyurethane.
Chrome plated or painted cover, leather or vinyl or painted or burl wood center cap.

Hub included - standard 3/4” taper

Ø = 350 mm (13.8”)

Depth = 81 mm (3.19”)



Morosini L B/CH/L



Morosini V B/CH/V



Morosini PU B/CH/V

Diameter	350 mm (13.8”)
Grip material	Leather or vinyl or mahogany or leather look polyurethane
Grip color	Black, grey, white, cream, mahogany
Spokes	Polished 304 stainless steel
Center cap	Leather or vinyl or painted or burl wood
Floating cap	n.a.
Standard 3/4” hub	Included
QDH hub	Available upon request*
Certifications & standards	CE, UKCA, NMMA; ISO 23411 & ABYC P22

* To be specified when ordering the wheel

Model	Part No.	Description
Morosini L B/CH/L	1T0067297F	Black leather grip, stainless steel spokes, chrome plated cover
Morosini V B/CH/V	1T0068000H	Black vinyl grip, stainless steel spokes, chrome plated cover
Morosini PU B/CH/V	1T0067461S	Black polyurethane grip, stainless steel spokes, chrome plated cover

Morosini
Vero Volante Italiano



3-spoke steering wheel.
Polished 304 stainless steel spokes.
Available grip:
• Hand-stitching leather
• Hand-stitching vinyl
• Mahogany
• Leather look polyurethane.
Chrome plated or painted cover, leather or vinyl or painted or burl wood center cap.

Hub included - standard 3/4” taper

Ø = 350 mm (13.8”)

Depth = 81 mm (3.19”)



Morosini M/CH/BR



Morosini L W/P/P
Morosini V W/P/P



Morosini L G/CH/L

Diameter	350 mm (13.8”)
Grip material	Leather or vinyl or mahogany or leather look polyurethane
Grip color	Black, grey, white, mahogany
Spokes	Polished 304 stainless steel
Center cap	Leather or vinyl or painted or burl wood
Floating cap	n.a.
Standard 3/4” hub	Included
QDH hub	Available upon request*
Certifications & standards	CE, UKCA, NMMA; ISO 23411 & ABYC P22

* To be specified when ordering the wheel

Model	Part No.	Description
Morosini M/CH/BR	1T0068378L	Mahogany grip, SS spokes, chrome plated cover
Morosini L W/P/P	1T0067298H	White leather grip, SS spokes, white painted cover
Morosini V W/P/P	1T0068831E	White vinyl grip, SS spokes, white painted cover
Morosini L G/CH/L	1T0067300R	Grey leather grip, SS spokes, chrome plated cover

Gritti
Vero Volante Italiano

new



Gritti V B/S

3-spoke steering wheel.
Polished 304 stainless steel spokes.
Perforated and plain leather, hand-stitched grip.
Stainless steel ring, leather lens.

Hub included - standard 3/4” taper

Ø = 350 mm (13.8”)

Depth = 86 mm (3.4”)

new



Gritti L B/SS

new



Gritti V B/S



new



Gritti V B/B

Diameter	350 mm (13.8”)
Grip material	Leather and alutec or leather and carbon
Grip color	Black
Spokes	Polished 304 stainless steel
Center cap	Leather
Floating cap	Available upon request.
Standard 3/4” hub	Included
QDH hub	n.a.
Certifications & standards	CE, UKCA, NMMA; ISO 23411 & ABYC P22

Model	Part No.	Description
Gritti L B/SS	1T00000153	Black perforated and plain leather grip, polished stainless steel spokes, polished stainless steel ring
Gritti V B/S	1T00000154	Black perforated and plain vinyl grip, brushed aluminum spokes, brushed stainless steel ring
Gritti V B/B	1T00000155	Black perforated and plain vinyl grip, black aluminum spokes, polished black stainless steel ring

Foscari
Vero Volante Italiano



3-spoke steering wheel.
Polished 304 stainless steel spokes.
Hand-stitching vinyl or leather look polyurethane grip.
Stainless steel cover, stainless steel center cap.

Hub included - standard 3/4” taper

Ø = 350 mm (13.8”)

Depth = 81 mm (3.19”)



Foscari V B/R



Foscari PU B



Foscari PU W

Diameter	350 mm (13.8”)
Grip material	Vinyl or leather look polyurethane
Grip color	Black, white, cream
Spokes	Polished 304 stainless steel
Center cap	Stainless steel
Floating cap	n.a.
Standard 3/4” hub	Included
QDH hub	Available upon request*
Certifications & standards	CE, UKCA, NMMA; ISO 23411 & ABYC P22

* To be specified when ordering the wheel

Model	Part No.	Description
Foscari V B/R	1T0021552L	Black vinyl grip, red stitches, stainless steel spokes, stainless steel cover
Foscari PU B	1T0067303X	Black polyurethane grip, stainless steel spokes, stainless steel cover
Foscari PU W	1T0067302V	White polyurethane grip, stainless steel spokes, stainless steel cover

Imperiale
Vero Volante Italiano



Imperiale V B/SS/P

3-spoke steering wheel.
Available spokes:
• Brushed 316L stainless steel with polished edges
• Brushed silver anodized aluminum with polished edges
Hand-stitching vinyl or leather look polyurethane grip.
Black painted cover, chrome plated center cap.

Hub included - standard 3/4” taper

Ø = 350 mm (13.8”)

Depth = 68 mm (2.68”)

Imperiale
Vero Volante Italiano



Imperiale V B/SS/P



Imperiale PU B/S/P



Diameter	350 mm (13.8”)
Grip material	Vinyl or leather look polyurethane
Grip color	Black
Spokes	Brushed 316L SS or brushed silver aluminum
Center cap	Chrome plated
Floating cap	n.a.
Standard 3/4” hub	Included
QDH hub	n.a.
Certifications & standards	CE, UKCA, NMMA; ISO 23411 & ABYC P22

Model	Part No.	Description
Imperiale V B/SS/P	1T0021299B	Black vinyl grip, brushed SS spokes with polished edges, black painted cover
Imperiale PU B/S/P	1T0021300G	Black polyurethane grip, brushed aluminum spokes with polished edges, black painted cover

Manin
Vero Volante Italiano



3-spoke steering wheel.
Polished 304 stainless steel or silver or black anodized aluminum spokes.
Leather look polyurethane grip.
Chrome plated cover and center cap.

Hub included - standard 3/4” taper

Ø = 350 mm (13.8”)

Depth = 90 mm (3.54”)



Manin PU B/SS/CH



Manin PU B/S/CH



Manin PU B/B/VE



Manin PU B/SS/VE

Diameter	350 mm (13.8”)
Grip material	Leather look polyurethane
Grip color	Black
Spokes	Polished 304 SS or silver or black aluminum
Center cap	Chrome plated or black and silver painted
Floating cap	Available upon request
Standard 3/4” hub	Included
QDH hub	Available upon request*
Certifications & standards	CE, UKCA, NMMA; ISO 23411 & ABYC P22

* To be specified when ordering the wheel

Model	Part No.	Description
Manin PU B/SS/CH	1T0068204A	Black polyurethane grip, stainless steel spokes, chrome plated cover
Manin PU B/S/CH	1T0068205C	Black polyurethane grip, silver aluminum spokes, chrome plated cover
Manin PU B/B/VE	1T0025934Y	Black polyurethane grip, black aluminum spokes, black and silver cover
Manin PU B/SS/VE	1T0025933W	Black polyurethane grip, stainless steel polished spokes, black and silver cover

Grimani
Vero Volante Italiano



Grimani PU B/S/VE

3-spoke steering wheel.
Polished 304 stainless steel or silver or black anodized aluminum spokes.
Leather look polyurethane grip with silver, chrome plated or matte black inserts.
Black painted and chrome plated, silver and chrome plated or black and matte black cover and black painted center cap.

Hub included - standard 3/4” taper

Ø = 350 mm (13.8”)

Depth: 90 mm (3.54”)



Grimani PU B/SS/CH



Grimani PU B/S/VE



Grimani PU B/B/CH



Grimani PU B/B/PB

Diameter	350 mm (13.8”)
Grip material	Leather look polyurethane with inserts
Grip color	Black with silver or chrome plated or matte black inserts
Spokes	Polished 304 SS or silver or black aluminum
Center cap	Black painted
Floating cap	Available upon request
Standard 3/4” hub	Included
QDH hub	Available upon request
Certifications & standards	CE, UKCA, NMMA; ISO 23411 & ABYC P22

Model	Part No.	Description
Grimani PU B/SS/CH	1T0069198P	Black polyurethane grip with chrome plated inserts, stainless steel spokes, chrome plated cover
Grimani PU B/S/VE	1T0069297S	Black polyurethane grip with silver inserts, silver aluminum spokes, silver painted cover
Grimani PU B/B/CH	1T0069298U	Black polyurethane grip with chrome plated inserts, black aluminum spokes, chrome plated cover
Grimani PU B/B/PB	1T0025936C	Black polyurethane grip with matte black inserts, black aluminum spokes, polished black cover

Grimani
Vero Volante Italiano



Grimani PU B/S/R

3-spoke steering wheel.
Silver anodized aluminum spokes.
Leather look polyurethane grip with color painted inserts.
Black and color painted cover and black painted center cap.

Hub included - standard 3/4” taper

Ø = 350 mm (13.8”)

Depth = 91,5 mm (3.6”)



Grimani PU B/S/BL



Grimani PU B/S/R



Grimani PU B/S/KG



Grimani PU B/S/Y

Diameter	350 mm (13.8”)
Grip material	Leather look polyurethane with inserts
Grip color	Black with color painted inserts
Spokes	Silver anodized aluminum
Center cap	Black painted
Floating cap	Available upon request
Standard 3/4” hub	Included
QDH hub	Available upon request
Certifications & standards	CE, UKCA, NMMA; ISO 23411 & ABYC P22

Model	Part No.	Description
Grimani PU B/S/BL	1T0069480G	Black polyurethane grip with blue inserts, silver aluminum spokes, black and blue cover
Grimani PU B/S/R	1T0069481J	Black polyurethane grip with red inserts, silver aluminum spokes, black and red cover
Grimani PU B/S/KG	1T0020836W	Black polyurethane grip with green inserts, silver aluminum spokes, black and green cover
Grimani PU B/S/Y	1T0069482L	Black polyurethane grip with yellow inserts, silver aluminum spokes, black and yellow cover

Loredan
Vero Volante Italiano



Loredan PU B/SS/CH

3-spoke steering wheel.
Polished 304 stainless steel or silver or black anodized aluminum spokes.
Leather look polyurethane grip with chrome plated inserts.
Black painted and chrome plated cover and black painted center cap.

Hub included - standard 3/4” taper

Ø = 350 mm (13.8”)

Depth = 92,5 mm (3.64”)



Loredan PU B/SS/CH



Loredan PU B/S/CH



Loredan PU B/B/CH



Loredan PU B/B/PB

Diameter	350 mm (13.8”)
Grip material	Leather look polyurethane with inserts
Grip color	Black with chrome plated inserts
Spokes	Polished 304 SS or silver or black aluminum
Center cap	Black painted
Floating cap	Available upon request
Standard 3/4” hub	Included
QDH hub	Available upon request
Certifications & standards	CE, UKCA, NMMA; ISO 23411 & ABYC P22

Model	Part No.	Description
Loredan PU B/SS/CH	1T0069557S	Black polyurethane grip with chrome plated inserts, stainless steel spokes, chrome plated cover
Loredan PU B/S/CH	1T0069558U	Black polyurethane grip with chrome plated inserts, silver aluminum spokes, chrome plated cover
Loredan PU B/B/CH	1T0069559W	Black polyurethane grip with chrome plated inserts, black aluminum spokes, chrome plated cover
Loredan PU B/B/PB	1T0025937E	Black polyurethane grip with polished inserts, black aluminum spokes, black polished cover

Falier
Vero Volante Italiano

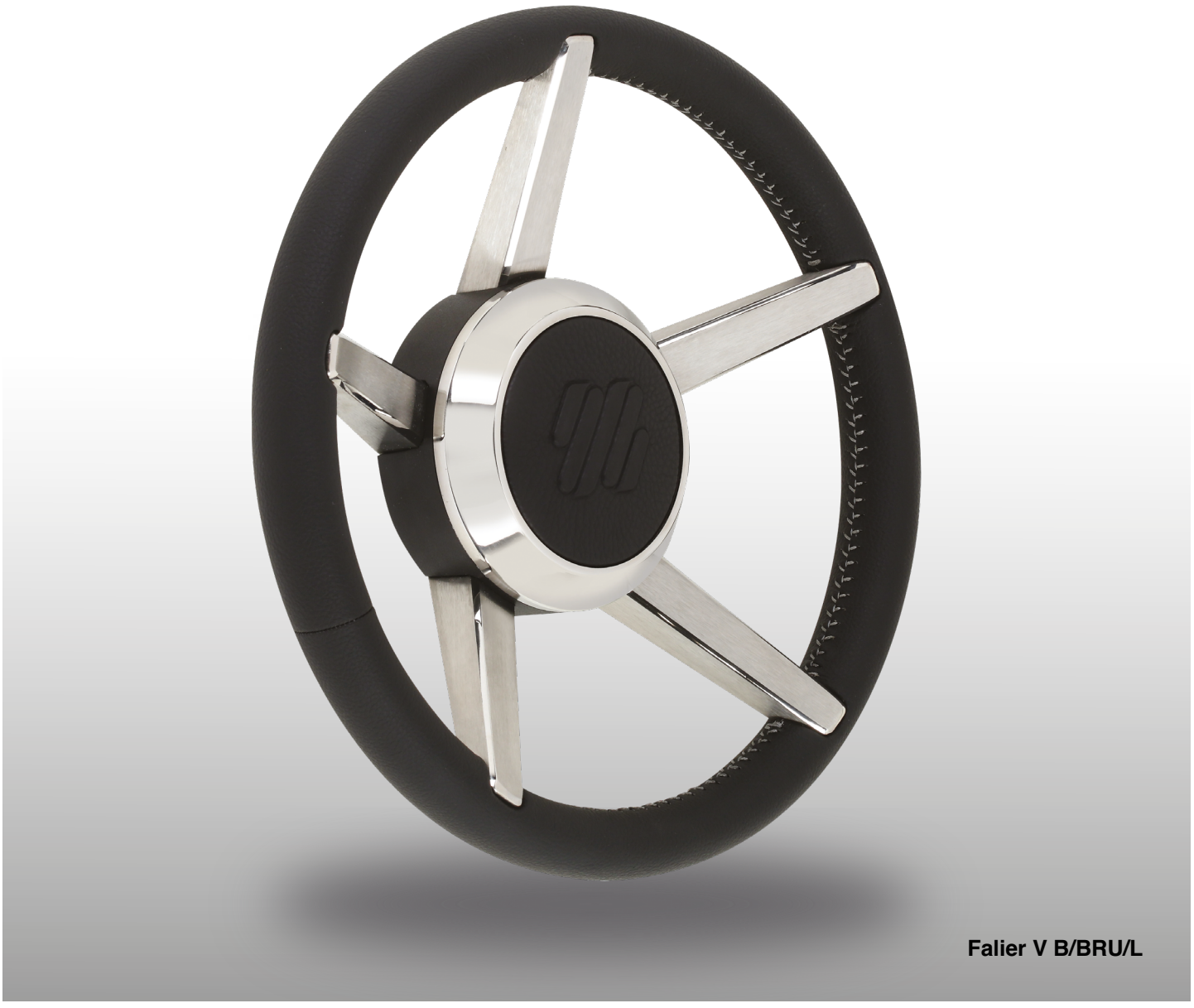

Falier V B/BRU/L

5-spoke steering wheel.
Brushed 316L stainless steel spokes.
Vinyl or leather look polyurethane grip
polished stainless steel cover, leather or painted center cap.

Hub included - standard 3/4” taper

Ø = 350 mm (13.8”)

Depth = 84 mm (3.3”)



Falier V B/BRU/L



Falier PU B/BRU/B

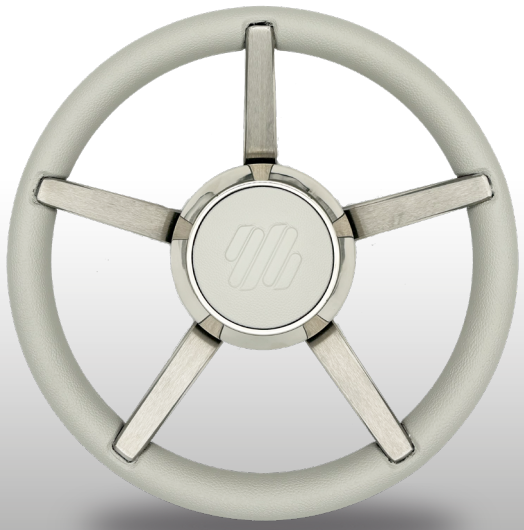

Falier PU G/BRU/G

Diameter	350 mm (13.8”)
Grip material	Vinyl or leather look polyurethane
Grip color	Black, grey
Spokes	Brushed 316L stainless steel
Center cap	Leather
Floating cap	Available upon request.
Standard 3/4” hub	Included
QDH hub	n.a.
Certifications & standards	CE, UKCA, NMMA; ISO 23411 & ABYC P22

Model	Part No.	Description
FALIER V B/BRU/L	1T0024733G	Black vinyl grip with grey stitches, stainless steel brushed spokes, stainless steel polished cover
FALIER PU B/BRU/B	1T0024734J	Black polyurethane grip, stinless steel brushed spokes, stainless steel polished cover
FALIER PU G/BRU/G	1T0024735L	Grey polyurethane grip, stainless steel brushed spokes, stainless steel polished cover

Adorno
Vero Volante Italiano



Diameter	350 mm (13.8”)
Grip material	Leather or leather look polyurethane
Grip color	Black
Spokes	Polished 304 stainless steel
Center cap	Polished SS
Floating cap	Available upon request
Standard 3/4” hub	Included
QDH hub	Available upon request*
Certifications & standards	CE, UKCA, NMMA; ISO 23411 & ABYC P22

* To be specified when ordering the wheel

Ø = 350 mm (13.8”)

Depth = 81 mm (3.19”)

Model	Part No.	Description
Adorno L B/SS/CH	1T0069169G	Black leather grip, polished stainless steel spokes, stainless steel cover



Doria PU B/S/R



Doria PU B/S/B

Diameter	350 mm (13.8”)
Grip material	Leather look polyurethane with inserts
Grip color	Black with color painted or chrome plated inserts
Spokes	Silver or chrome plated
Center cap	Painted
Floating cap	n.a.
Standard 3/4” hub	Included
QDH hub	n.a.
Certifications & standards	CE, UKCA, NMMA; ISO 23411 & ABYC P22

Ø = 350 mm (13.8”)

Depth = 74 mm (2.91”)

Model	Part No.	Description
Doria PU B/S/R	1T0067309K	Black polyurethane grip with red inserts, silver spokes
Doria PU B/S/B	1T0067465A	Black polyurethane grip with black inserts, silver spokes

Captiva HU/B - Heated steering wheel
Vero Volante Italiano



- Power switch embedded in the spoke
- Two available heating modes: COMFORT and HIGH
- Sliding contacts power supply
- LED dimmer (day/night)
- Low voltage monitoring and disconnection
- 12V DC and 24V DC power supply (50 W draw)
- Fits all front mount Ultraflex and Seastar™ hydraulic helms.
- Fits Ulltraflex electronic tilt helms
- Fits all Ultraflex tilt mechanisms, featuring internal routing of the wire
- IP65 rated.
- Captiva HU/BK with Knob included
- Compatible with knob SK-25458S
- Patented
- Hub included - standard 3/4” taper
- Center nut available as spare part

Ø = 350 mm (13.8”)

Depth = 85 mm (3.34”)

Captiva HU/B - Heated steering wheel
Vero Volante Italiano



Captiva HU/B



Captiva HU/BK



Diameter	350 mm (13.8”)
Frame	Front: polished 316L stainless steel; Rear: black TPU
Spokes	Polished 316L stainless steel and TPU with black inserts
Center Nut	Polished stainless steel
Standard 3/4” hub	Included
QDH hub	n.a.
Certifications & standards	CE, UKCA, NMMA; ISO 23411 & ABYC P22

Model	Part No.	Description
Captiva HU/B	1T0024995P	Heated steering wheel, SS front grip and TPU rear grip, stainless steel and TPU spokes with black inserts,
Captiva HU/BK	1T0026143V	Heated steering wheel, SS front grip and TPU rear grip, stainless steel and TPU spokes with black inserts, Knob included

Captiva BK - Captiva B
Vero Volante Italiano



3-spoke steering wheel, available with incorporated knob or without knob.
Polished 316L stainless steel and black TPU spokes with black inserts.
Polished 316L stainless steel front grip, black TPU rear grip.
Polished stainless steel center nut (available as spare part).
Captiva B is compatible with **Knob SK** 1T0025458S as retrofit.

Hub included - standard 3/4” taper

Ø = 350 mm (13.8”)

Depth = 85 mm (3.34”)



Captiva BK



Captiva B



Captiva B + Knob SK



Diameter	350 mm (13.8”)
Frame	Front: polished 316L stainless steel; Rear: Black TPU
Spokes	Polished 316L stainless steel and TPU with black methacrylate inserts
Center Nut	Polished stainless steel
Standard 3/4” hub	Included
QDH hub	n.a.
Certifications & standards	CE, UKCA, NMMA; ISO 23411 & ABYC P22

Model	Part No.	Description
Captiva BK	1T0025883H	SS and TPU grip, stainless steel and TPU spokes with black inserts, incorporated knob
Captiva B	1T0025884K	SS and TPU grip, stainless steel and TPU spokes with black inserts
Knob SK	1T0025458S	Speed knob for Captiva B steering wheel

Captiva GK - Captiva G - Captiva SFK - Captiva SF
Vero Volante Italiano

VERO VOLANTE ITALIANO



Captiva G

3-spoke steering wheel, available with incorporated knob or without knob.
Polished 316L stainless steel and black TPU spokes with grey or color seafoam inserts.
Polished 316L stainless steel front grip, black TPU rear grip.
Polished stainless steel center nut (available as spare part).

Hub included - standard 3/4” taper

Ø = 350 mm (13.8”)

Depth = 85 mm (3.34”)



Captiva GK



Captiva G



Captiva SFK



Captiva SF

Diameter	350 mm (13.8")
Frame	Front: polished 316L stainless steel; Rear: black TPU
Spokes	Polished 316L stainless steel and TPU with inserts
Center Nut	Polished stainless steel
Standard 3/4" hub	Included
QDH hub	n.a.
Certifications & standards	CE, UKCA, NMMA; ISO 23411 & ABYC P22

Model	Part No.	Description
Captiva GK	1T0025851U	Stainless steel and TPU grip, stainless steel and TPU spokes with grey painted ABS inserts incorporated knob
Captiva G	1T0025853Y	Stainless steel and TPU grip, stainless steel and TPU spokes with grey painted ABS inserts
Captiva SFK	1T0025850S	Stainless steel and TPU grip, stainless steel and TPU spokes with color seafoam inserts, incorporated knob
Captiva SF	1T0025852W	Stainless steel and TPU grip, stainless steel and TPU spokes with color seafoam inserts.

Contarini
Vero Volante Italiano



Contarini TPU/SS

3-spoke steering wheel.
Polished 316L stainless steel spokes.
Polished 316L stainless steel and TPU grip.
Stainless steel cover, black painted center cap.

Hub included - standard 3/4” taper

Ø = 350 mm (13.8”)

Depth = 79,5 mm (3.13”)



Contarini TPU/SS



Contarini TPU/SS with KNOB SK



Diameter	350 mm (13.8”)
Grip material	Black TPU and polished 316L stainless steel
Spokes	Polished 316L stainless steel
Center cap	Black painted
Floating cap	n.a.
Standard 3/4” hub	Included
QDH hub	n.a.
Certifications & standards	CE, UKCA, NMMA; ISO 23411 & ABYC P22

Model	Part No.	Description
Contarini TPU/SS	1T0069199S	Black TPU and SS grip, SS spokes, SS cover
Knob SK	1T0025458S	Speed knob for Contarini steering wheel (available as spare part)

Siestakey
Vero Volante Italiano



Siestakey B

2-spoke steering wheel.
Polished 316L stainless steel and TPU spokes.
Polished 316L stainless steel and black TPU grip.
Black cover.

Hub included - standard 3/4” taper

Ø = 368 mm (14.5”)

Depth = 90 mm (3.54”)

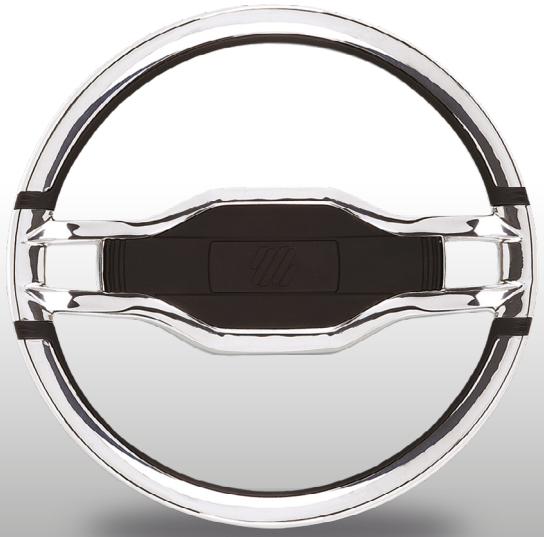

Siestakey B



Siestakey B with KNOB SK



Diameter	368 mm (14.5”)
Grip material	Polished 316L stainless steel and TPU
Grip color	Polished stainless steel and black TPU
Spokes	Polished 316L stainless steel
Cover	Black
Floating cap	n.a.
Standard 3/4” hub	Included
QDH hub	n.a.
Certifications & standards	CE, UKCA, NMMA; ISO 23411 & ABYC P22

Model	Part No.	Description
Siestakey B	1T0068188F	Stainless steel and black TPU grip, stainless steel spokes, black cover
Knob SK	1T0025458S	Speed knob for Siestakey steering wheel

Keywest
Vero Volante Italiano



Carbon fiber 3-spoke wheel.
Available with incorporated knob or without knob.
Black TPU rear grip.

Hub included - standard da 3/4” taper.

Ø = 350 mm (13.8”)

Depth = 96 mm (3.77”)



Keywest BLCK



Keywest PCK



Keywest BLC



Keywest PC

Diameter	350 mm (13.8”)
Frame	Carbon fiber
Grip material	Polished blue and polished carbon fiber and TPU.
Spokes	Carbon fiber and TPU
Floating cap	n.a.
Standard 3/4” hub	Included
QDH hub	n.a.
Certifications & standards	CE, UKCA, NMMA; ISO 23411 & ABYC P22

Model	Part No.	Description
Keywest BLCK	1T0025481L	Polished blue carbon fiber and TPU grip and spokes. Knob included
Keywest PCK	1T0025479A	Polished carbon fiber and TPU grip and spokes. Knob included
Keywest BLC	1T0025484T	Polished blue carbon fiber and TPU grip and spokes.
Keywest PC	1T0025482N	Polished carbon fiber and TPU grip and spokes.

Keywest
Vero Volante Italiano



Carbon fiber 3-spoke wheel.
Available with incorporated knob or without knob.
Black TPU rear grip.

Hub included - standard da 3/4” taper.

Ø = 350 mm (13.8”)

Depth = 96 mm (3.77”)



Keywest GRCK



Keywest PCBCK



Keywest MCK

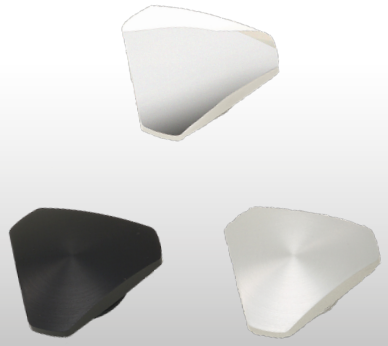

Keywest nut

Diameter	350 mm (13.8”)
Frame	Carbon fiber
Grip material	Polished green and polished or matt carbon fiber.
Spokes	Carbon fiber and TPU
Floating cap	n.a.
Standard 3/4” hub	Included
QDH hub	n.a.
Certifications & standards	CE, UKCA, NMMA; ISO 23411 & ABYC P22

Model	Part No.	Description
Keywest GRCK	1T0025887S	Polished green carbon fiber and TPU grip and spokes. Knob included
Keywest PCBCK	1T0025888U	Polished forged carbon fiber and TPU grip and spokes. Knob included
Keywest MCK	1T0025480J	Matte carbon fiber and TPU grip and spokes. Knob included
Center Nut Matte Black	1T0025945D	Available as optional
Center Nut Silver	1T0025944B	Available as optional
Center Nut Silver Polished	1T0025946F	Available as optional

QDH - Quick Disconnect Hub
Steering wheels accessories

QDH	1T0023013D	**Quick disconnect hub for standard 3/4” taper**

QDH - Quick Disconnect Hub allows for easy removal of the steering wheel from the cockpit.

Suitable with Ultraflex®steering wheels: please refer to steering wheel application chart



QDH







X63 - 1T0040119D **- Standard Hub**



Please refer to steering wheel application chart

Protection cover (Ultraflex Logo) 1T0022824Z



Also available with customized logo (minimum order quantity: 20 pieces)



KNOB UST



KNOB21



KNOB V56



KNOB SK



KNOB67

Model	Part No.	Knob suitable for the following steering wheels:
KNOB UST	1T0021721H	Asinara PU, Domino, Falier PU, Giannutri, Imperiale PU, Levanzo, Montecristo, Ustica
KNOB21	1T0042371A	V01SS, V10SS, V23, V25SS, V35, V65
KNOB V56	1T0023600F	Adorno PU, Foscari PU, Morosini PU, V56
KNOB SK	1T0025458S	Captiva, Contarini, Siestakey
KNOB67	1T0040677R	V67, V63, V66, V62, V74/40, V85

Steering wheel accessories
Application chart

X63	KNOB UST	KNOB21	KNOB67	KNOB V56	KNOB SK	
ASINARA, CAPRAIA, CAPRI, CORSICA, DOMINO, GIANNUTRI, LEVANZO MELORIA, MONTECRISTO, NISIDA, PALMARIA, PANTELLERIA, PIANOSA, RAZZOLI, TAVOLARA, USTICA	ASINARA PU, DOMINO, FALIER PU, GIANNUTRI, IMPERIALE PU, LEVANZO, MONTECRISTO, USTICA	V01SS, V10SS, V23, V25SS, V35, V65	V62, V63, V66, V67, V74/40, V85	ADORNO PU, FOSCARI PU, MOROSINI PU, V56	CAPTIVA, CONTARINI, SIESTAKEY	

	FLOATING CAP	QDH - QUICK DISCONNECT HUB	PADDLE TRIM WITH TILT	PADDLE TRIM WITH FRONT MOUNT HELM	FABRIC COVER
	ASINARA, BARBARIGO, CONTARINI, DOLFIN, FALIER, GRIMANI, GRITTI, GUARCO, IMPERIALE, LOREDAN, MANIN, MONTECRISTO, ODERICO, RAZZOLI, SORANZO, SPINOLA, TRON, VENDRAMIN, V16, V19, V78	ADORNO, ASINARA, CAPRAIA, CAPRI, CORSICA, DOMINO, FOSCARI, FREGOSO, GALLINARA, GIANNUTRI, GIGLIO, GRIMANI, GRITTI, LEVANZO, LOREDAN, MANIN, MANNA, MELORIA, MONTECRISTO, MOROSINI, NISIDA, PALMARIA, PANTELLERIA, PIANOSA, RAZZOLI, TAVOLARA, USTICA	ADORNO, ASINARA, CAPRAIA, CAPRI, CAPTIVA, CORSICA, CONTARINI, DOLFIN, DOMINO, DORIA, FALIER, FREGOSO, FOSCARI, GALLINARA, GIANNUTRI, GIGLIO, GRITTI, GRIMANI, GUARCO, IMPERIALE, KEYWEST, LEVANZO, LOREDAN, MANIN, MELORIA, MONTECRISTO, MOROSINI, NISIDA, ODERICO, PALMARIA, PANTELLERIA, PIANOSA, RAZZOLI, SIESTAKEY, SPINOLA, TAVOLARA, USTICA, V01, V10, V16, V19, V21, V35, V56, V57, V62, V66, V70, V75, V76, V78	ADORNO, ASINARA, CAPTIVA, CAPRAIA, CONTARINI, CORSICA, DOLFIN, DOMINO, DORIA, FALIER, FOSCARI, FREGOSO, GRIMANI, GRITTI, GUARCO, IMPERIALE, LEVANZO, LOREDAN, MANIN, MELORIA, MONTECRISTO, MOROSINI, NISIDA, ODERICO, PALMARIA, PANTELLERIA, PIANOSA, RAZZOLI, SIESTAKEY, SORANZO, TAVOLARA, USTICA, V01, V10, V21, V25, V35, V56, V57, V62, V66, V70	ADORNO, ASINARA, BARBARIGO, BOCCANEGRA, CAPRAIA, CAPTIVA, CORSICA, CONTARINI, DOLFIN, DOMINO, DORIA, FALIER, FOSCARI, FREGOSO, GIGLIO, GRITTI, GRIMANI, GUARCO, IMPERIALE, KEYWEST, LOREDAN, MANNA, MELORIA, MONTECRISTO, MOROSINI, NISIDA, ODERICO, PIANOSA, RAZZOLI, SORANZO, SPINOLA, TAVOLARA, TRON, VENDRAMIN, V01, V10, V16, V19, V21, V25, V38, V56, V57, V60, V62, V66, V70, V75, V78

Paddle Trim





For complete control of engine trim and tilt, trim tabs, jackplates, PowerPole(R) and other on board systems, the innovative Paddle Trim system is the answer.

Adaptable to existing front mount hydraulic and tilt helms, the Paddle Trim is ergonomically designed to allow the driver to make precise adjustments to the attitude of the boat or other systems without removing his hand from the steering wheel.

PTS-1 - 1T0043051L - Single paddle kit including one paddle and the brackets to attach to a tilt or to a front mount helm

PTS-2 - 1T0043052N - Two paddles and the brackets to attach it to a tilt or to a front mount helm



Single or dual



Adjustable positioning



Tilt or front mount

Features

- Available both in single and dual versions (for either two equal or two different outputs).
- Both single or dual paddle can be positioned at various angles for the most confortable choice.
- Equipped with one water proof “MOM.ON-OFF-MOM.ON” switch (2 switches on dual version).
- Max load 2 Amp @ 12VDC.
- Suitable for any kind of steering wheel dish. Max wheel dia. 400 mm (15.7”).
- Easy to install on the following Ultraflex® steering systems:
  - front and tilt mount hydraulic helms
  - tilt mount mechanical helms
- Wiring harness, labels and mounting hardware kit are included. The mounting plate, which differs between front and tilt mount installation, is to be ordered separately.

KTR kit

- Kit relay **KTR** - 1T0042860S:
  - It allows a Paddle Trim pair to control electrical loads up to 10 Amp (e.g. Trim Tabs Uflex®).
  - Easy to use and to install, through connectors with pre-crimped contacts.



KTR kit

Paddle Trim labels

	ENGINE TRIM & TILT	JACKPLATE	TRIM TABS	HORN
UP				
DOWN				

Order guide

DESCRIPTION	P. No	SINGLE QTY	DUAL QTY
- Single function control device	1T0042857D	1	2
- Mounting plate for tilt mount helms (mech or hydraulic)	1T0042858F	1	1
or:			
- Mounting plate for front mount hydraulic helms	1T0042859H	1	1
- **KTR** kit relay for loads exceeding 5 Amp	1T0042860S	1	2

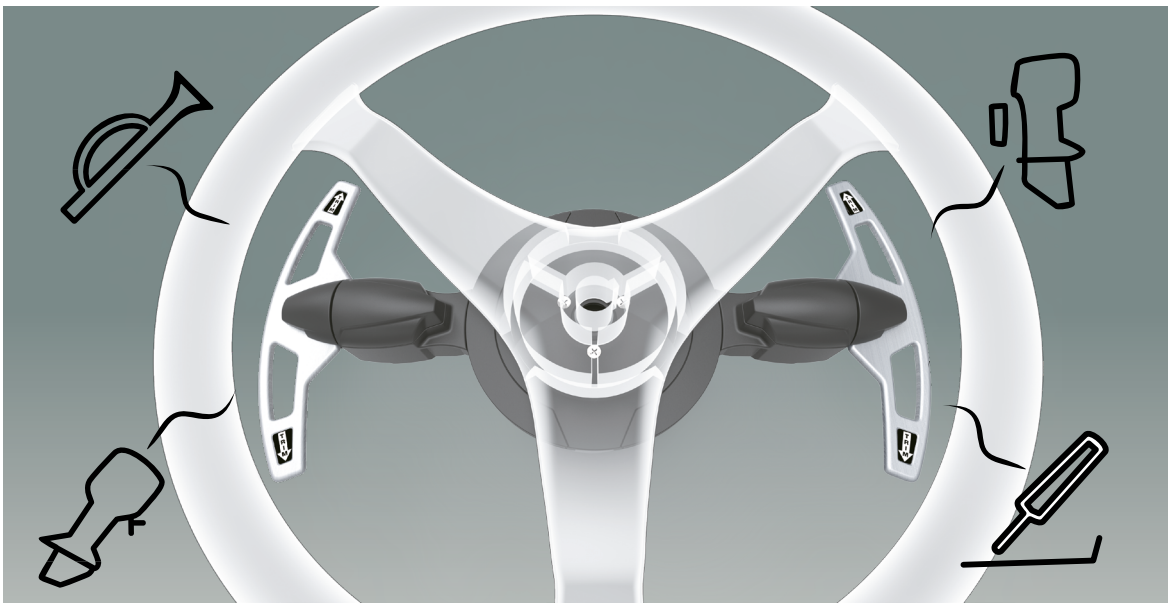

HANDLES

ISO15085

Handles with stainless steel grip.

H01	Stainless steel and PU handle
H02	Stainless steel handle and PU with insert

Available in different sizes upon request



H01



H02

Handles with polish carbon or matt carbon grip.

H03	Polished carbon handle and PU
H04	Matt carbon handle and PU

Available in different sizes upon request



H03



H04

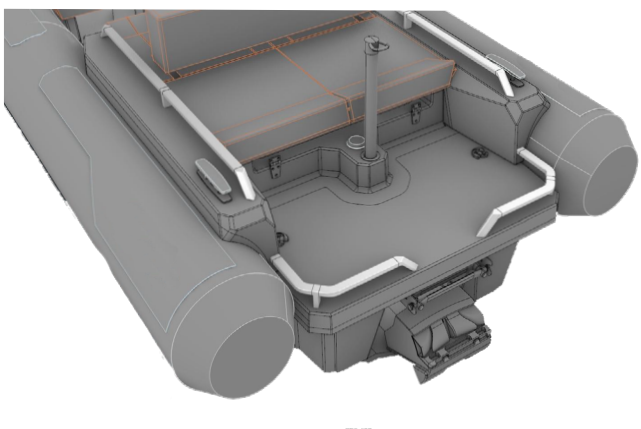

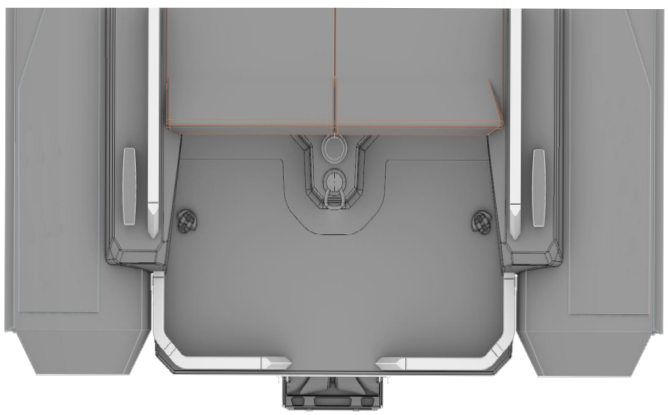

ISO15085

Handles with stainless steel grip.

H05	Stainless steel handle
H06	Stainless steel handle and leather

Available in different sizes upon request



H05



H06

Handles with stainless steel grip.

H07	Stainless steel and leather
H08	Stainless steel handle

Available in different sizes upon request



H07



H08

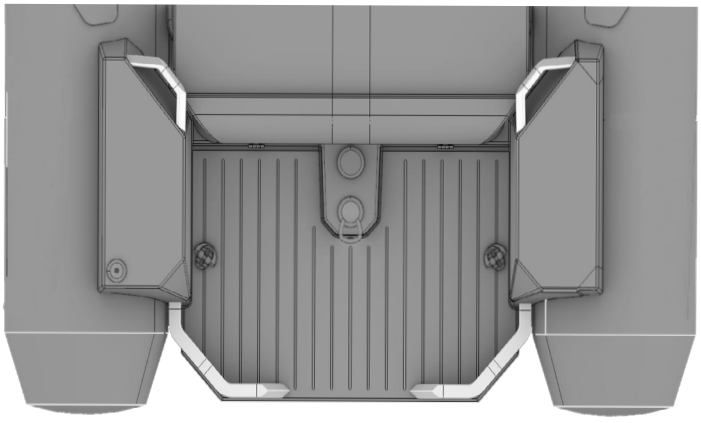

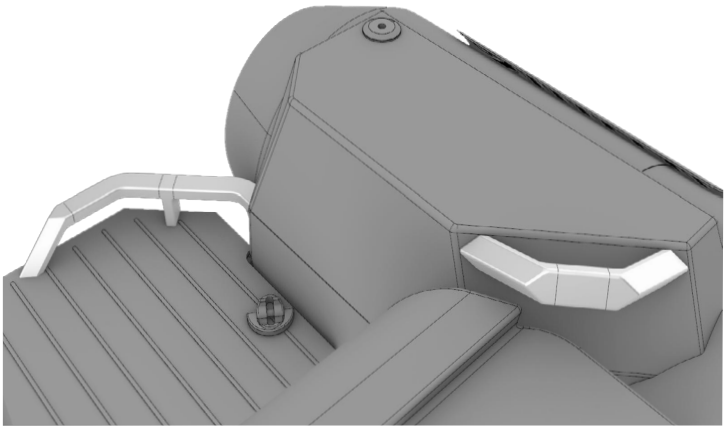

Vero Volante Italiano
The brand

“VERO VOLANTE ITALIANO” is the registered trademark which distinguishes the steering wheels for pleasure boats produced by Ultraflex.

They are conceived by Italian designers, engineered and manufactured in Italy by employing genuine Italian components and technologies according to Ultraflex quality management system.

All ULTRAFLEX steering wheels meet the directive 2013/53/EU requirements about pleasure boats.

All steering wheels are CE marked in conformity with the EN 28848 – EN 29775 and ABYC P22 safety standards

VERO VOLANTE ITALIANO

Vero Volante Italiano
Maintenance

- Periodically clean the steering wheel to remove any salt deposit: rinse with fresh water and dry with a clean cloth
- Do not use any aggressive soap or alcohol based cleaner or solvent that may damage the steering wheel
- Use specific cleaning products on leather finished steering wheels; automotive leather equipment cleaners and cloths are the most indicated
- Always protect the steering wheel with its own canvas cover during non-use periods


CTRL
WARM
HIGH
IDLE
SYNC

Power A Mark II™
Electronic control system

Power A Mark II™

- **Private protocol CAN-bus for data transmission**
- **Suitable for mechanical shift and throttle as well as electronic Throttle and shift**
- **Connection of multiple stations up to 4 controls**
- **Modular system**
- **Direct communication with electronic engines (SAE J 1939 or NMEA 2000)**
- **Plug'n play connectivity**
- **Automatic engine syncronization**
- **Dock assist**
- **Fully programmable shift delays**
- **Personalized label upon request**
- **Available installation also for 3 or 4 engines***

*Please, contact our Technical Department for 3 or 4 engine installations.

Easy to install PowerA Mark II™ control system provides fingertip operation of throttle and shift levers.

Using reliable and precise digital data transmission, this single or dual function control system is specifically designed to work on mechanically controlled as well as electronic and electro-hydraulic gas and diesel inboards, sterndrives and outboards.

The PowerA Mark II™ comes with many features including Dock Assist, which offers the operator the opportunity to reduce the sensitivity of the throttle function for easier dockside handling.
Other standard features include RPM Synchronization, which reduces engine vibration and improves fuel economy, a High Idle feature to increase RPM where higher idle is necessary for cold engine operations, and provided our Technical Assistance, a programmable Trolling Valve Control and neutral Warm Up.
The stylish and ergonomically designed control makes the PowerA Mark II™ suitable for many types of applications ranging from sport boats, yachts and commercial applications.
Available with and without trim, the control has audible and visual interfaces which alert the operator to the current status of the control system.
With the ability to control up to 4 outboard engines from up to 4 different stations, the PowerA Mark II™ is a modular and flexible system with simple to install components.
The unique Control Unit Display of the PowerA Mark II™ provides simple touch pad programming with descriptive information regarding the set up, tuning and diagnostics of the system.

Power A Mark II is a system that can replace mechanical controls either on fully mechanical engines, or on fully electronical engins, or on engines with the combination of both characteristics.

SAFETY DEVICES
- Start in-gear PROTECTION(start inhibition with shifted gear)
- Audible and visual diagnostic failure alarm (READABLE MESSAGES ON THE CONTROL UNIT DISPLAY)
- Proportional shift delays
- Programmable working parameters
- Meets CEI EN 60945 standards

Compatibility with all mechanical throttle engines

Compatibility with all electronic throttle engines
- Cummins, Detroit Diesel, Scania, Iveco, FPT, Lombardini, VM Motori, FNM, Yanmar, CMD-Volkswagen, Hyundai etc.

Power A Mark II™ electronic system actuators cannot be installed in those rooms where ignition-proof devices are required.

Power A Mark II™
Electronic control system

Control stations	up to 4
Control stations IP Protection	IP66
Power supply	min. 9V / Max 32V
Working temperature	-25°C to +75°C
Electronic throttle output voltage	double output 0 - 5V and or - 2,5V
Electronic throttle output PWM	0-100%, frequency from 200HZ to 1 KHZ
Electronic throttle output current	4 - 10MA
Digital throttle output	SAEJ 1939, NMEA 2000®
Trolling valve output voltage	0 - 5V
Trolling valve output PWM	0-100%, frequency from 100HZ to 1 KHZ
Trolling valve output current	4 - 20MA
Electric shift control	2 or 3 ON/OFF or proportional solenoids
Certifications	CEI EN60945 UNI-EN ISO 11547

The "**Power A Mark II™ - Installation and User Manual**" describes activities, operations, technical specifications which must be followed during the installation and/or usage of the product, in order to keep a valid warranty and obtain the better performance. Description and drawings in that manual are suitable to allow an easy installation and safe use of the product by skilled personnel. In case of doubt and/or for any information, please contact our Technical Service.

PLEASE REFER TO LIMITED WARRANTY CONDITIONS REPORTED IN THIS CATALOGUE.

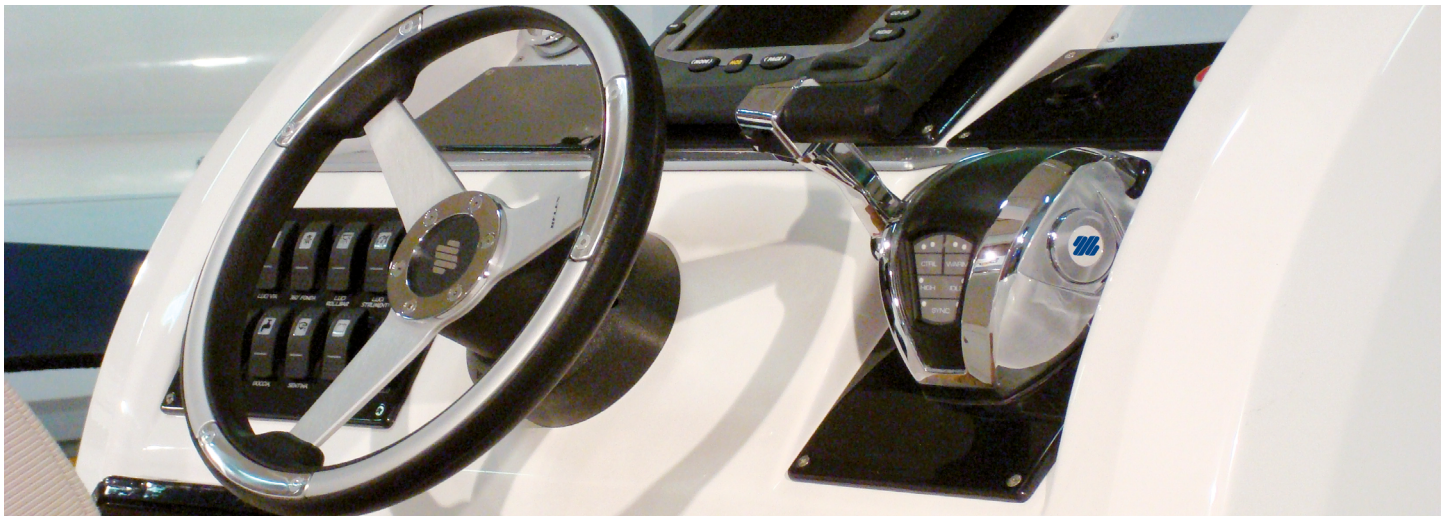

Power A Mark II™
Electronic control system

Power A Mark II™

STANDARD CONTROL STATIONS:

IP protection: IP66
Control without trim:

Model	Part n.	Description
PA2-B1	1A0042009G	Chrome single-engine control station without trim
PA2-BB1	1A0042426Z	Black single-engine control station without trim
PA2-B2	1A0042011T	Chrome twin-engine control station without trim
PA2-BB2	1A0042425X	Black twin-engine control station without trim





STANDARD CONTROL STATIONS:

IP protection: IP66
Control with trim:

Model	Part n.	Description
PA2-B1T	1A0042010R	Chrome single-engine control station with trim
PA2-BB1T	1A0042427B	Black single-engine control station with trim
PA2-B2T	1A0042012V	Chrome twin-engine control station with trim
PA2-BB2T	1A0042428D	Black twin-engine control station with trim





COMPACT CONTROL STATIONS:

IP protection: IP66
Control without trim:

Model	Part n.	Description
PA2-B1-C	1A0043923V	Chrome single-engine compact control station without trim
PA2-B2-C	1A0043924X	Chrome twin-engine compact control station without trim





COMPACT CONTROL STATIONS WITH SAIL FUNCTION:

Including **SAIL** function in order to stop the rotation of the shafting making the use of folding blade propellers more effective when sailing by reducing dragging and shaft sealing overstress”
The **SAIL** function can be activated only when the panel is turned off, commanding the actuator to shift into reverse.

IP protection: IP66
Control without trim:

Model	Part n.	Description
PA2-B1-CS	1A0044072A	Chrome single-engine compact control station without trim and with sail function
PA2-B2-CS	1A0044074E	Chrome twin-engine compact control station without trim and with sail function





Power A Mark II™
Modular components

Control Unit



PA2-CU - 1A0042017F
PA2-CU 4 engines Control Unit - 1A0043157 D
Control Unit: user interface for the configuration, settings and diagnostic of all the modules in a system.
IP protection: IP65
Dim.: 215 x 120 mm (8.5” x 4.7”)

V-Throttle
I-Throttle



PA2-VT - 1A0042018H - for 0-5V interfaces (voltage)
PA2-IT - 1A0042019K - for 4-20 mA interfaces (current)
They supply the throttle electronic signal. Required for use with direct connection to electronic throttle on the engine.
IP protection: IP65
Dim.: 205 x 110 mm (8” x 4.3”)

SAEJ-Throttle



PA2-SAEJT - Customized
It supplies the digital signals to CAN SAEJ 1939 or NMEA 2000 interfaces
IP protection: IP65
Dim.: 205 x 110 mm (8” x 4.3”)

PWM-Throttle



PA2-PWMT - 1A0042020U
It supplies the electrical signals to PWM interfaces
IP protection: IP65
Dim.: 205 x 110 mm (8” x 4.3”)

Shift Unit



PA2-SU - 1A0042023A
It controls up to 2 shifts with solenoids. Required for use with direct connection to the electrical shift unit on the transmission.
IP protection: IP65
Dim.: 210 x 120 mm (8.3” x 4.7”)

E-Troll
Electronic or electric



Control Unit for Trolling Valve both electronic (0-5V; 4-20mA) and electric (PWM) interface, designed according to customer’s specifications. For controls with Trolling Valve please contact our Technical Service for custom configuration.

Power Unit



PA2-PU - 1A0042026G
Provides power for up to 4 modules with the input combination of up to 2 batteries, 12 and 24V. Required for all PowerA Mark II installations.
IP protection: IP65
Dim.: 205 x 110 mm (8” x 4.3”)

M-Actuator



PA2-MA - 1A0044134W
The electromechanical actuators can control any mechanical interface (throttle shift or custom made trolling valve) through MACHZero and C8 mechanical cables.
Compatible with the new Sail compact control units
IP protection: IP66
Length: 320 mm (12.6”)

CHART A - E-Throttle Unit

MODEL	P. No.	DESCRIPTION	FEATURES	No. OF ENGINES	ENGINE TYPE
V-Throttle	1A0042018H	Throttle with analog voltage interface	Redundant voltage input, IVS.	1 - 2	FPT, Yanmar, Mercruiser, Lombardini.
V-Throttle	1A0042437E	Throttle with analog voltage interface	Redundant voltage input, IVS.	1 - 2	Volkswagen
I-Throttle	1A0042019K	Throttle with current analog interface	Current outputs.	1 - 2	4 - 20 mA throttle engines
PWM-Throttle	1A0042020U	Throttle with PWM interface	PWM outputs	1 - 2	Perkins, Caterpillar
SAEJ -Throttle	Personalized	Throttle with SAEJ 1939 interface	CAN DeviceNet SAEJ 1939 outputs	1 - 2	SAEJ 1939 engines
NMEA -Throttle	Personalized	Throttle with NMEA 2000 interface	CAN DeviceNet NMEA 2000 outputs	1 - 2	NMEA 2000 engines

CHART B - Throttle cables

MODEL	APPLICATION	LENGTH (m)	P. No.	CONNECTORS
Universal V-Throttle cable	Not redundant 5V cable/1 engine	2 4	1A0042029N 1A0042030X	None
FPT V-Throttle cable	FPT engines 0 – 5 V cable (J-INV connector)	2 4	1A0042350S 1A0042351U	FPT, all engines with J-INV connector
FPT V-Throttle cable	FPT engines 0 – 5 V cable (J-D connector)	2 4	1A0042348F 1A0042349H	FPT, all engines with J-D connector
VW V-Throttle cable (4-5-6 cylinder)	VW engines 0 – 5 V cable	2 4	1A0042033D 1A0042034F	VW, 4, 5 and 6 cylinder
Mercruiser 4.2 Black V-Throttle cable	Mercruiser engines 0 – 5 V cable	2 4	1A0042035H 1A0042036K	Mercruiser 4.2 black engines
Mercruiser QSD V-Throttle cable	Mercruiser engines 0 – 5 V cable	2 4	1A0042037M 1A0042038P	Mercruiser QSD engines
Lombardini V-Throttle cable	Lombardini engines 0 – 5 V cable	2 4	1A0042039S 1A0042040A	180 and 240 HP Lombardini engines.
Yanmar V-Throttle cable	Yanmar engines 0 – 5 V cable	2 4	1A0042041C 1A0042042E	Yanmar BY engines
Universal I/ PWM-Throttle cable	PWM throttle cable with no connector	2 4	1A0042043G 1A0042044J	Compatible with CAT electronic engines C30/C32
Universal SAEJ1939-Throttle cable	SAEJ1939 cable with no connector	2 4	1A0042045L 1A0042046N	None
NMEA2000 Throttle cable	NMEA2000 cable	1 3 7	1A0042047R 1A0042048T 1A0042049V	DeviceNet cable Drop type for NMEA2000 connection
Hyundai V-Throttle cable	Hyundai engines 0 – 5 V cable	2 4	1A0042288P 1A0042289S	Hyundai engines
Perkins PWM-Throttle cable	Perkins engine PWM Throttle cable	2 4	1A0042374G 1A0042373E	Perkins engines

CHART C - Main system cables

DESCRIPTION	APPLICATION	LENGTH (m)	P. No.	CONNECTORS
Main power supply cable	Main power supply of the system	1 3 7 10	1A0042052H 1A0042053K 1A0042054M 1A0042055P	One each battery
Power cable extension	Power extension cable for modules connection	1 3 7 10	1A0042056S 1A0042057U 1A0042058W 1A0042059Y	One each mechanical actuator or shift unit
Shift cable	Solenoid connection cable	1 3 7 10	1A0042060G 1A0042061J 1A0042062L 1A0042063N	One each solenoid shift
3 solenoid Shift cable (neutral solenoid)	3 solenoid connection cable	1 3 7 10	1A0042072P 1A0042073S 1A0042074U 1A0042075W	One each 3 solenoid shift
CAN cable	Network connection cable	1 3 7 10 15 20	1A0073639T 1A0073680P 1A0073681S 1A0071021K 1A0071031N 1A0071032R	CAN cable

Note:
Should the engine inverter need the neutral solenoid, the proper shift cable must be used.
Custom wiring can be done, upon request

CHART D - Troll cables

DESCRIPTION	APPLICATION	LENGTH (m)	P. No.	CONNECTORS
Universal V-Troll cable	0-5 V cable with no redundancy	2 4	1A0042068Z 1A0042069B	None
Universal I-Troll cable	0.20 mA output cable, no connectors included	2 4	1A0042070K 1A0042071M	None

Spare parts

MODEL	DESCRIPTION	P. No.	Q.TY
Cable connection kit	Kit to connect the mechanical cable to the actuator	1A0041898N	1 for each actuator
Conduit clamp kit	Conduit clamp kit for mechanical cable	1A0041897L	1 for each actuator

Power A Mark II™
Order guide

ENGINE	NO. OF ENGINES	COMPONENTS	P. No.	Q.TY
PwA II-EE **Electronic throttle** **Electric shift**	**Single Engine**	Single control with trim (or no trim)	Select control	1
		Control Unit	1A0042017F	1
		E-Throttle unit	Chart A	1
		E-Shift unit	1A0042023A	1
		Throttle cable	Chart B	1
		Shift cable	Chart C	1
		Power supply cable (general)	Chart C	1
		CAN cable	Chart C	3
		Network terminators	1A0042028L	1
		Power Unit (optional for second battery)	1A0042026G	1
		Power cable extension (optional for second battery)	Chart C	1
		Power supply cable (optional for second battery)	Chart C	1
	Two Engines	Dual control with trim (or no trim)	Select control	1
		Control Unit	1A0042017F	1
		E-Throttle unit	Chart A	1
		E-Shift unit	1A0042023A	1
		Throttle cable	Chart B	2
		Shift cable	Chart C	2
		Power supply cable (general)	Chart C	1
		CAN cable	Chart C	3
		Network terminators	1A0042028L	1
		Power Unit (optional for second battery)	1A0042026G	1
		Power cable extension (optional for second battery)	Chart C	1
		Power supply cable (optional for second battery)	Chart C	1
PwA II-EM **Electronic throttle** **Mechanical shift**	**Single Engine**	Single control with trim (or no trim)	Select control	1
		Control Unit	1A0042017F	1
		E-Throttle unit	Chart A	1
		Mechanical actuator	1A0042027J	1
		Throttle cable	Chart B	1
		CAN cable	Chart C	3
		Power supply cable (general)	Chart C	1
		Network terminators	1A0042028L	1
		Power Unit (optional for second battery)	1A0042026G	1
		Power cable extension (optional for second battery)	Chart C	1
		Power supply cable (optional for second battery)	Chart C	1
	Two Engines	Dual control with trim (or no trim)	Select control	1
		Control Unit	1A0042017F	1
		E-Throttle unit	Chart A	1
		Mechanical actuator	1A0042027J	2
		Throttle cable	Chart B	2
		CAN cable	Chart C	4
		Power supply cable (general)	Chart C	1
		Network terminators	1A0042028L	1
		Power Unit	1A0042026G	1
		Power extension cable	Chart C	2
		Power supply cable (optional for second battery)	Chart C	1
For each additional station add:				
Single Engine:		Single lever control station with trim (or no trim)	Select control	1
		CAN cable	Chart C	1
Two Engines:		Dual lever control station with trim (or no trim)	Select control	1
		CAN cable	Chart C	1

ENGINE	NO. OF ENGINES	COMPONENTS	P. No.	Q.TY
PwA II-ME Mechanical throttle Electronic shift	Single Engine	Single control with trim (or no trim)	Select control	1
		Control Unit	1A0042017F	1
		E-Throttle unit	1A0042023A	1
		Mechanical actuator	1A0042027J	1
		Throttle cable	Chart C	1
		CAN cable	Chart C	3
		Power supply cable (general)	Chart C	1
		Network terminators	1A0042028L	1
		Power Unit (optional for second battery)	1A0042026G	1
		Power cable extension (optional for second battery)	Chart C	2
		Power supply cable (optional for second battery)	Chart C	1
	Two Engines	Dual control with trim (or no trim)	Select control	1
		Control Unit	1A0042017F	1
		E-Throttle unit	1A0042023A	1
		Mechanical actuator	1A0042027J	2
		Throttle cable	Chart C	2
		CAN cable	Chart C	4
		Power supply cable (general)	Chart C	1
		Network terminators	42028L	1
		Power Unit	42026G	1
		Power extension cable	Chart C	3
		Power supply cable (optional for second battery)	Chart C	1
PwA II-MM Mechanical throttle Mechanical shift	Single Engine	Single control with trim (or no trim)	Select control	1
		Control Unit	1A0042017F	1
		Mechanical actuator	1A0042027J	2
		CAN cable	Chart C	3
		Power supply cable (general)	Chart C	1
		Network terminators	1A0042028L	1
		Power Unit	1A0042026G	1
		Power extension cable	Chart C	2
		Power supply cable (optional for second battery)	Chart C	1
	Two Engines	Dual control with trim (or no trim)	Select control	1
		Control Unit	1A0042017F	1
		Mechanical actuator	1A0042027J	4
		CAN cable	Chart C	5
		Power supply cable (general)	Chart C	1
		Network terminators	1A0042028L	1
		Power Unit	1A0042026G	1
		Power extension cable	Chart C	4
		Power supply cable (optional for second battery)	Chart C	1
	Three Engines	Dual control with trim (or no trim)	Select control	1
		Control Unit	1A0042017F	1
		Control Unit 3/4 engines	1A0043157D	1
		Mechanical actuator	1A0042027J	6
		CAN cable	Chart C	8
		Power supply cable (general)	Chart C	2
		Network terminators	1A0042028L	1
		Power Unit	1A0042026G	2
		Power extension cable	Chart C	6
		Power supply cable (optional for second battery)	Chart C	2
	Four Engines	Dual control with trim (or no trim)	Select control	1
		Control Unit	1A0042017F	1
		Control Unit 3/4 engines	1A0043157D	1
		Mechanical actuator	1A0042027J	8
		CAN cable	Chart C	10
		Power supply cable (general)	Chart C	2
		Network terminators	1A0042028L	1
		Power Unit	1A0042026G	2
		Power extension cable	Chart C	8
		Power supply cable (optional for second battery)	Chart C	2
For each additional station add:				
Single Engine:		Single lever control station with trim (or no trim)	Select control	1
		CAN cable	Chart C	1
Two Engines:		Dual lever control station with trim (or no trim)	Select control	1
		CAN cable	Chart C	1

CHART E - Components for Trolling Valve systems*

ENGINE	NO. OF ENGINES	COMPONENTS	P. No.	Q.TY
Mechanical trolling valve	Single Engine	Mechanical actuator (Troll) CAN cable Power cable extension	1A0042027J Chart C Chart C	1 1 1
	Twin Engines	Mechanical actuator Power Unit CAN cable Power supply cable (general) Power cable extension	1A0042027J 1A0042026G Chart C Chart C Chart C	2 0 (*) 2 0 (*) 2
	(*) When there are no more free sockets in the existing power unit, add one Power Unit with one or two power supply cables according to battery number. Refer to the diagram on installation manual.			
Electric troll (proportional solenoid)	Single Engine	Shift Unit CAN cable Power cable extension Cavo Shift con Troll	1A0042023A Chart C Chart C Chart C	1(**) 1(**) 1(**) 1
	Twin Engines	Shift Unit CAN cable Power cable extension Power Unit Power supply cable (general) Shift cable with Troll	1A0042023A Chart C Chart C 1A0042026G Chart C Chart C	1(**) 1(**) 1(**) 0 (*) 0 (*) 2
	(*) When there are no more free sockets in the existing power unit, add one Power Unit with one or two power supply cables according to battery number. Refer to the diagram on installation manual.			
	(**) When a shift unit is already present in the system, it can control the electric troll by using the proper cable. When a shift box is not present, add one to the system with the shift and CAN cables.			
Electronic Troll (0-5V, 4-20mA)	Single Engine	E-Troll Unit CAN cable Troll cable	Custom made Chart C Chart D	1 1 1
	Twin Engines	E-Troll Unit CAN cable Troll cable	Custom made Chart C Chart D	1 1 2

*Before ordering, please contact our Technical Deparment



Ultraflex control boxes





All Ultraflex control boxes are made specifically for the marine environment, using materials and working processes which offer long life and safety for the most extreme conditions

How control boxes work

A boat's steering system consists of many components, all of which are essential to ensure proper operation and safety in case of emergency manoeuvres.
Among the components used to control the throttle and the boat's direction there are the Ultraflex control boxes.
These are designed to have a correct and personal feeling between the user and the boat.



Recommendations when choosing a control box

A correct selection of the control box depends on various factors such as:

- **Communication with engine:** Ultraflex control boxes can be mechanical (when both throttle and shift cable is in use), electronic (when both throttle and shift cable are controlled by a position sensor) and hybrid (when using the throttle position sensor and the inverter cable).
- **Spaces on board:** the control boxes are usually “Top Mount” and “Side Mount”. The “Top Mount” models are installed on the dashboard, the “Side Mount” models on one side of the boat. Attention must be paid to the space around the controls as the rotation of the lever must not be prevented; moreover, in case of mechanical control boxes, it is necessary to ensure the correct routing of the control cables.
- **Design:** Ultraflex control boxes are designed with the aim to follow as much as possible the style of the boat on which they will be installed.

Warnings

All the control boxes, as they are steering elements, must be kept in perfect condition at all times to ensure their operation. Furthermore, in case of installation with mechanical and hybrid control boxes, the cables and their smoothness inside the conduit must be regularly checked. For a correct maintenance, please refer to the user and maintenance manuals supplied with Ultraflex products.

It is recommended to use in combine with Ultraflex controls a “Emergency Safety Switch”: a safety device to switch the engine off in case of accidental step away of the driver from the driving position.

Universal Emergency Safety Switch



Emergency Safety Switch - 5A0076691L

- Suitable with most outboard, inboard and sterndrive engines.
- Swivel carabiner eliminates lanyard tangling
- Corrosion resistant
- IP67

B400
Single lever side mount controls

Lever	Single lever
Lever control	Dual action control
Assembly	Side mount
Installation	Horizontally or vertically
Applications	Sailing boats, inboard
Version	Fully mechanical
Adjustable friction	Yes
Engine Warm up button	Yes
X41 Neutral safety switch	Not included - to be ordered separately
EN ISO 11547	Yes, when X41safety switch is installed
Control cables	C2, C8, MachZero

B400	1A0042076Y	B400 Control Box - Fully mechanical version



B400

Featuring AISI 316 stainless steel lever and bezel, the B400 has a sleek and modern design which is ideal for sailboats.
The B400 has an universal control mechanism that allows for both “push” or “pull” for throttle and shift, push button warm up, and will accept 33C style cables without any adapters.

- 316 stainless steel lever and flange for a better resistance in the marine environment
- Enables easy and safe shifting by preventing accidental gear engagement unless engine is idling
- Can be installed horizontally or vertically, on the starboard or port side of the boat
- Provided with a throttle friction system easily adjustable
- Push-in button for throttle operation in Neutral (ENGINE WARM UP).
- Neutral safety switch **X41** – 1A0038130F (optional) prevents in-gear starting
- Exceeds EN ISO 11547 standards when X41 safety switch is installed

Control cables
- Accept Ultraflex C2, C8, MACHZero control cables (no kit required)

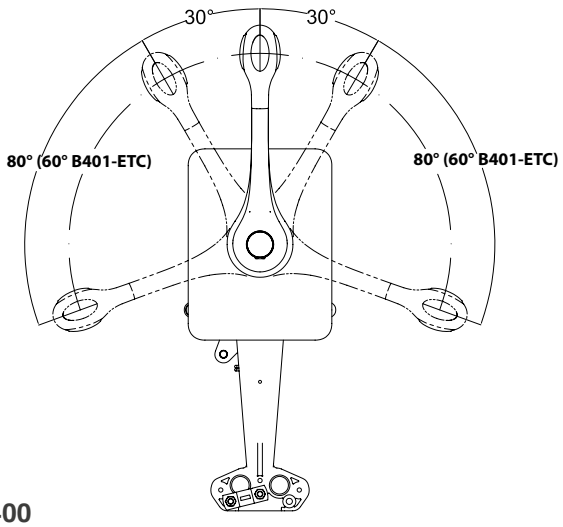

B400

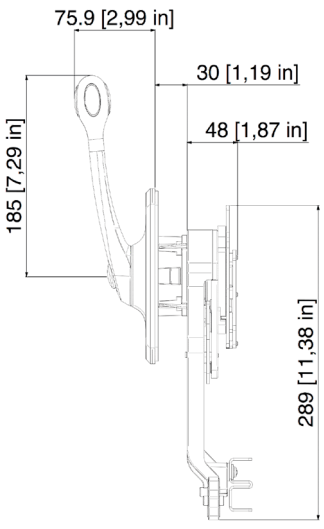

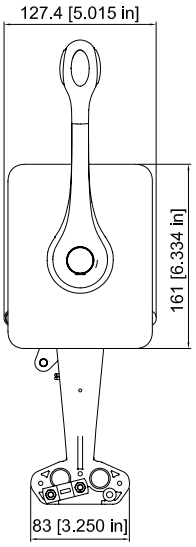

B401-ETC (Electronic Throttle Control)
Hybrid single lever side mount control

Lever	Single lever
Lever control	Dual action control
Assembly	Side mount
Installation	Horizontally or vertically
Applications	Sailing boats, inboard
Version	Hybrid mechanical shift electric throttle
Output voltage range	Chosen by the customer between 0 & 5V
Power supply	5V +/-10%, linearity +/-1%
Adjustable friction	Yes
Engine Warm up button	Yes
X41 Neutral safety switch	Included
EN ISO 11547	Yes, when X41safety switch is installed
Control cables	C2, C8, MachZero

B401-ETC	1A0042077A	Control Box - Hybrid version (mechanical shift, electronic throttle)



B401-ETC

B401-ETC (Electronic Throttle Control) version is available on request. The sensor has an analog output signal which can be single or redundant. The output voltage range is chosen by the customer between 0 and 5V. Power supply 5V +/-10%, linearity +/-1%.

Featuring AISI 316 stainless steel lever and bezel, the B401-ETC has a sleek and modern design which is ideal for sailboats.

B401-ETC has a universal control mechanism that allows for both “push” or “pull” for throttle and shift, push button warm up, and will accept 33C style cables without any adapters.

- 316 stainless steel lever and flange for a better resistance in the marine environment
- Enables easy and safe shifting by preventing accidental gear engagement unless engine is idling
- Can be installed horizontally or vertically, on the starboard or port side of the boat
- Provided with a throttle friction system easily adjustable
- Push-in button for throttle operation in Neutral (ENGINE WARM UP).
- Neutral safety switch **X41** – 1A0038130F included prevents in-gear starting
- Exceeds EN ISO 11547 standards when X41 safety switch is installed
- Angular lever stroke as in the B400

Control cables
- Accept Ultraflex C2, C8, MACHZero control cables (no kit required)

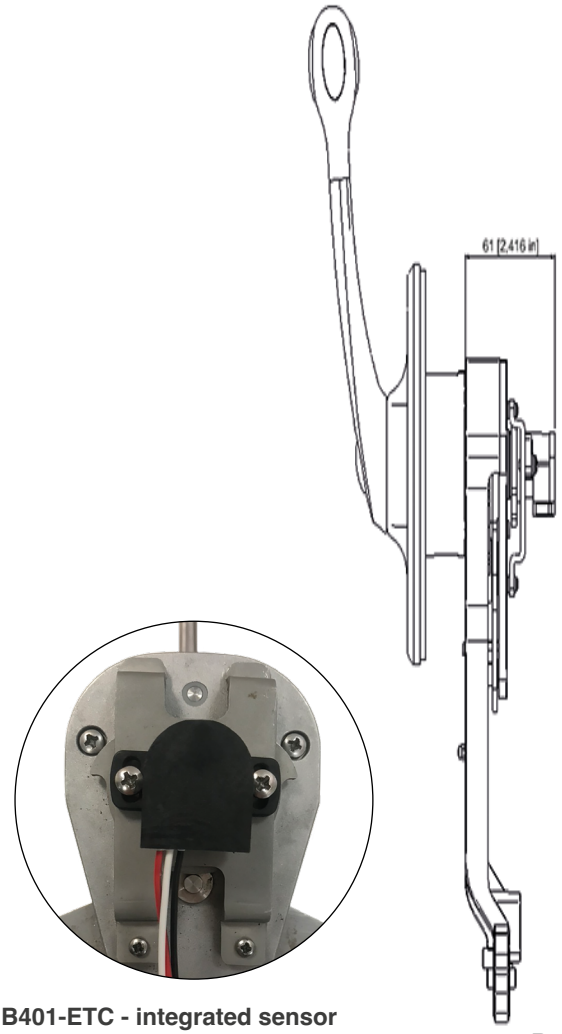

B401-ETC - integrated sensor

B401-ETC

B310 and B310-ETC series
Mechanical and hybrid single lever side mount controls


B310CH


B310B


B310BR

Lever	Single lever
Lever control	Dual action control
Assembly	Side mount
Installation	Horizontally or vertically
Applications	Inboard, outboard, sterndrives
Version	Fully mechanical or hybrid (mecha-nical shift, electronic throttle)
Adjustable friction	Yes
Warm up mode	Yes
X41 Neutral safety switch	Not included mechanical controls only
EN ISO 11547	Yes, when X41 safety switch is installed
Control cables	C2, C8, C14, MachZero, Mach14
Control cables that require a connection kit	C5, C16, Mach5 (K35); C22 (KB1)

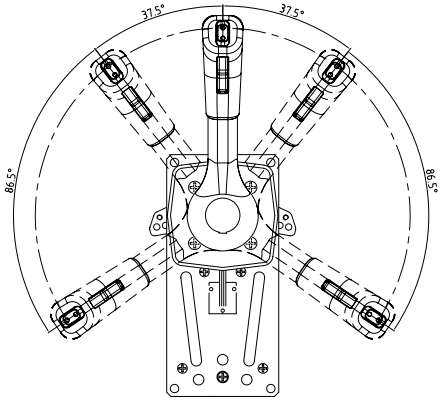

The B310 controls combine elegance, functionality and versatility.
Available with chrome plated, burl or soft touch control levers, the B310 series can be used on outboards, sterndrives and inboard applications.
The universal control design allows for the connection of 33C Universal style cable and OMC (Johnson/Evinrude) cables with adapters included.

Mercury Gen I cables can be easily connected with the addition of the K35 connection kit

- Enables easy and safe shifting by preventing accidental gear engagement unless engine is idling
- Can be installed horizontally or vertically, on the starboard or port side of the boat
- Provided with a throttle friction system adjustable from outside
- Pull-out handle disengages shift for warm-up
- Neutral safety switch **X41** – 1A0038130F (optional) prevents in-gear starting. **X41** switch is included in the hybrid controls.
- Exceeds EN ISO 11547 standards when X41 safety switch is installed
- All models are provided with positive lock-in neutral to prevent accidental gear engagement
- All models are provided with a power trim switch conveniently located in the handle grip that enables an easy tilting of the engine

Control cables
For use with:
– All Ultraflex control cables except C36 and MACH36
– Ultraflex C5, C16, MACH5 and Mercury® cables require K35 – 1A0034730U connection kit
– Ultraflex C22 cables require KB1 – 1A0039964L connection kit



B310B-ETC



B310B-NT No Trim

B310B-ETC (Electronic Throttle Control) version is available on request. The sensor has an analog output signal which can be single or redundant.

The output voltage range is chosen by the customer between 0 and 5V. Power supply 5V +/-10%, linearity +/-1%.

B310CH	1A0041789H	Chrome plated version, provided with a positive lock-in neutral and trim switch
B310BR	1A0041788F	Burl version, provided with a positive lock-in neutral and trim switch
B310B	1A0041790S	Black version, provided with a positive lock-in neutral and trim switch
B310B-NT	1A0042628M	Black version, Provided with a positive lock-in neutral and without trim switch
B310B-ETC	1A0044041N	Hybrid version (mechanical shift, electronic throttle)

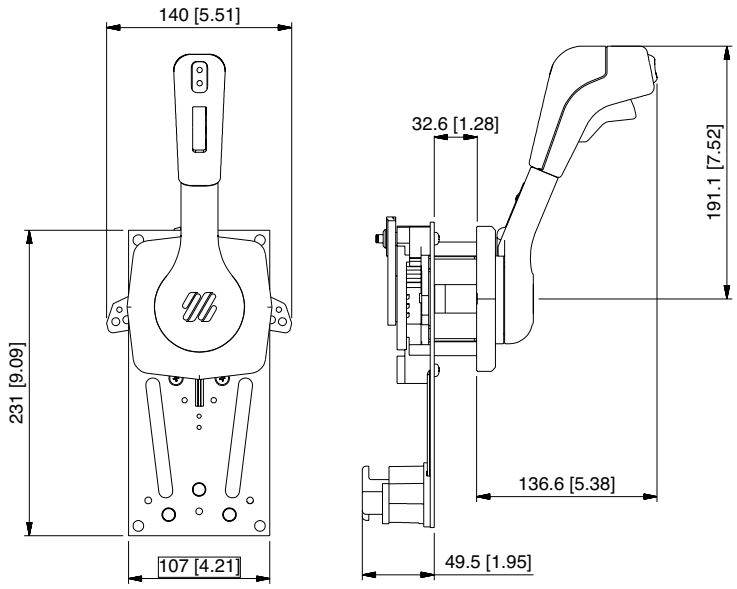

B310CH - B310BR - B310B - B310B-ETC

B183 - B184 - B85 - B183-ETC - B184-ETC - B85-ETC
Mechanical or hybrid single lever side mount controls



B183
B183-ETC



B184 - wth Trim
B184-ETC

Mechanical or hybrid single lever / dual action control to operate both throttle and shift.
Suitable for any type of boat with outboard and inboard (no trim version) engine

- Enables easy and safe shifting by preventing accidental gear engagement unless engine is idling
- Can be installed horizontally or vertically, on the starboard or port side of the boat
- Provided with a throttle friction system adjustable from outside
- Pull-out handle disengages shift for warm-up
- Neutral safety switch **X41** – 1A0038130F (optional) prevents in-gear starting. **X41** switch is included in the hybrid controls.
- Exceeds EN ISO 11547 standards when X41 safety switch is installed
- Provided with positive lock-in neutral to prevent accidental gear engagement

B184 model is provided with a **power trim switch** conveniently located in the handle grip that enables an easy tilting of the engine
B85 model has a smooth design for use on sailboats.

	B183	B184	B85
Lever	Single lever	Single lever	Single lever
Lever control	Dual action control	Dual action control	Dual action control
Assembly	Side mount	Side mount	Side mount
Installation	Horizontally or vertically	Horizontally or vertically	Horizontally or vertically
Applications	Inboard	Inboard, outboard, sterndrives	Inboard, sailboats
Version	Fully mechanical or hybrid	Fully mechanical or hybrid	Fully mechanical or hybrid
Adjustable friction	Yes	Yes	Yes
Warm-up mode	Yes	Yes	Yes
Positive lock-in neutral	Yes	Yes	Yes
Power trim switch	No	Yes	No
X41 Neutral Safety Switch	Not included mechanical controls only	Not included mechanical controls only	Not included mechanical controls only
EN ISO 11547	Yes, when X41 safety switch is installed	Yes, when X41 safety switch is installed	Yes, when X41 safety switch is installed
Control cables	C2, C8, MachZero, Mach14	C2, C8, MachZero, Mach14	C2, C8, MachZero, Mach14
Control cables that require a connection kit	C5, C16, Mach5 (K35)	C5, C16, Mach5 (K35)	C5, C16, Mach5 (K35)

B183 - B184 - B85 - B183-ETC - B184-ETC - B85-ETC
Mechanical or hybrid single lever side mount controls



B85

B85-ETC

B183	1A0038945B	Provided with a positive lock-in neutral
B184	1A0038946D	Provided with a positive lock-in neutral and trim switch
B85	1A0035682I	Provided with a positive lock-in neutral

B183, B184, B85 are available also in the hybrid version (mechanical shift and electronic throttle)

B183-ETC	1A0044020E	Provided with a positive lock-in neutral
B184-ETC	1A0043983P	Provided with a positive lock-in neutral and trim switch
B85-ETC	1A0044040L	Provided with a positive lock-in neutral

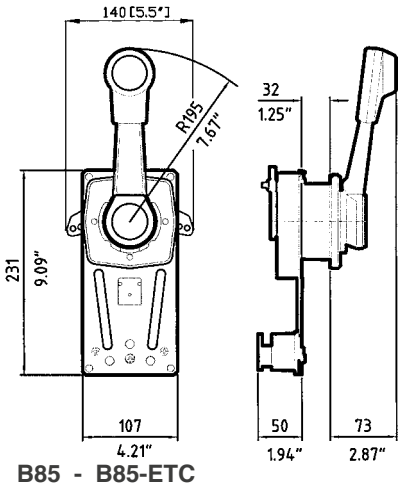

B85 - B85-ETC

B183-ETC - B184-ETC - B85-ETC (Electronic Throttle Control) version are available on request.
The sensor has an analog output signal which can be single or redundant.
The output voltage range is chose by the customer between 0 and 5V.
Power supply 5V +/-10%, linearity +/-1%.

Control cables:
- For use with all Ultraflex engine control cables except C22, C36 and MACH36.
- Ultraflex C5, C16 and MACH5 cables require K35 – 1A0034730U connection kit
- Ultraflex C22 cable requires KB1 – 1A0039964L connection kit

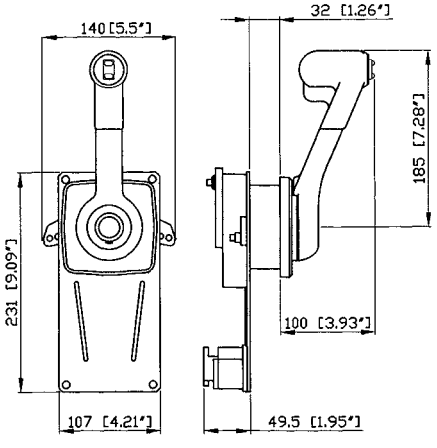

B183 - B183-ETC B184 - B184-ETC

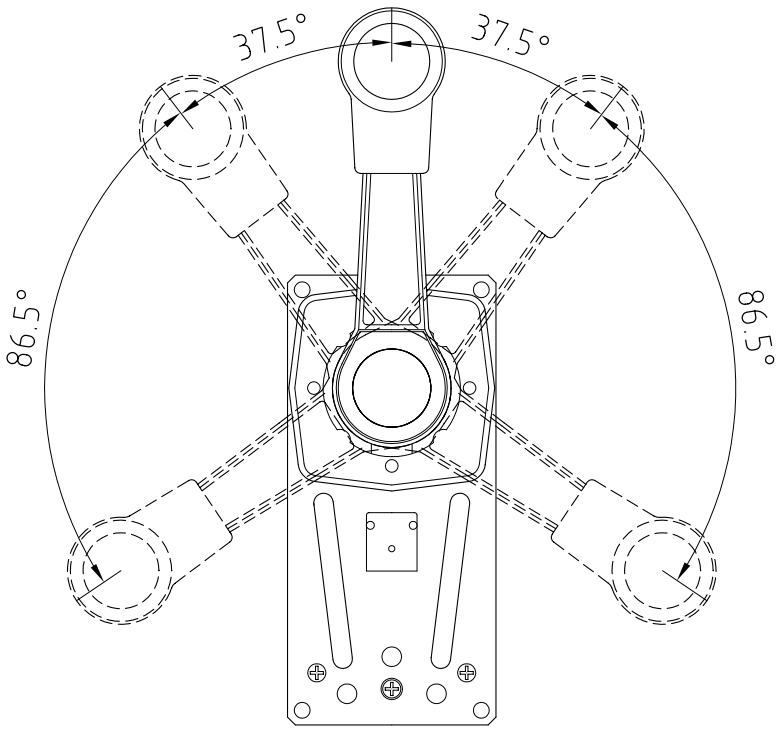

B186
Mechanical single lever side mount controls





B186B

Mechanical or hybrid single lever / dual action control to operate both throttle and shift.
Suitable for any type of boat inboard (no trim version) engine.

- Enables easy and safe shifting by preventing accidental gear engagement unless engine is idling
- can be mounted on the right or left bulkhead, horizontally or vertically, or in a cockpit
- Provided with a throttle friction system adjustable from outside
- Pull-out handle disengages shift for warm-up
- Neutral safety switch **X41** – 1A0038130F (optional) prevents in-gear starting.
- Exceeds EN ISO 11547 standards when X41 safety switch is installed

B186 model has a smooth design for use on sailboats.

	B186B	B186W
Lever	Single lever	
Lever control	Dual action control	
Assembly	Side mount	
Installation	Horizontally or vertically	
Applications	Inboard	
Version	Fully mechanical or hybrid	
Adjustable friction	Yes	
Warm-up mode	Yes	
Positive lock-in neutral	No	
Power trim switch	No	
X41 Neutral Safety Switch	Not included mechanical controls only	
EN ISO 11547	Yes, when X41 safety switch is installed	
Control cables	C2, C8, MachZero, Mach14	
Control cables that require a connection kit	C5, C16, Mach5 (K35)	

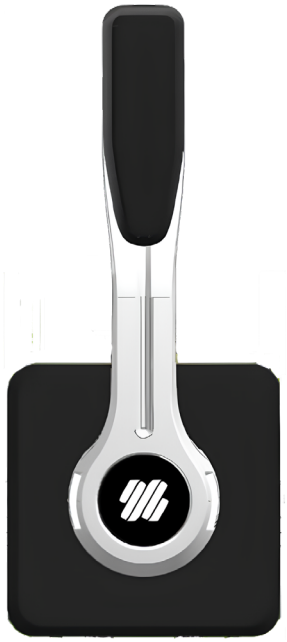



B186W

B186B	1A0044173G	Black single lever bulkhead mount
B186W	1A0044279Z	White single lever bulkhead mount

Control cables:
- For use with all Ultraflex engine control cables except C22, C36 and MACH36.
- Ultraflex C5, C16 and MACH5 cables require K35 – 1A0034730U connection kit
- Ultraflex C22 cable requires KB1 – 1A0039964L connection kit

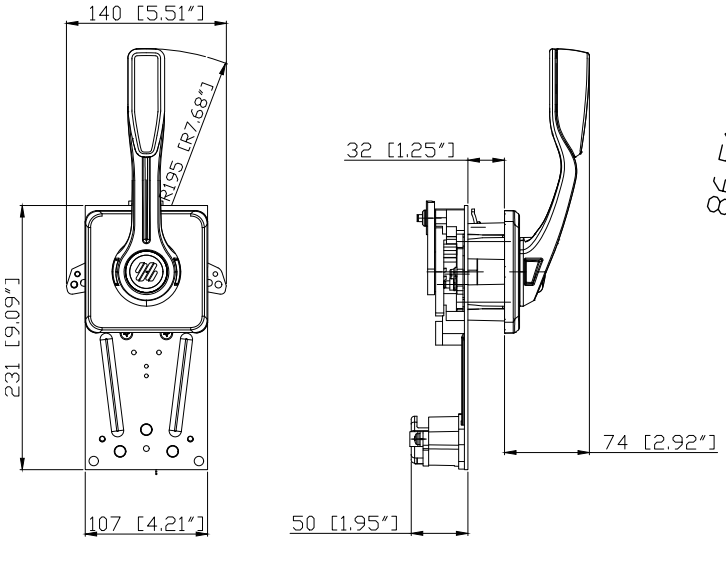

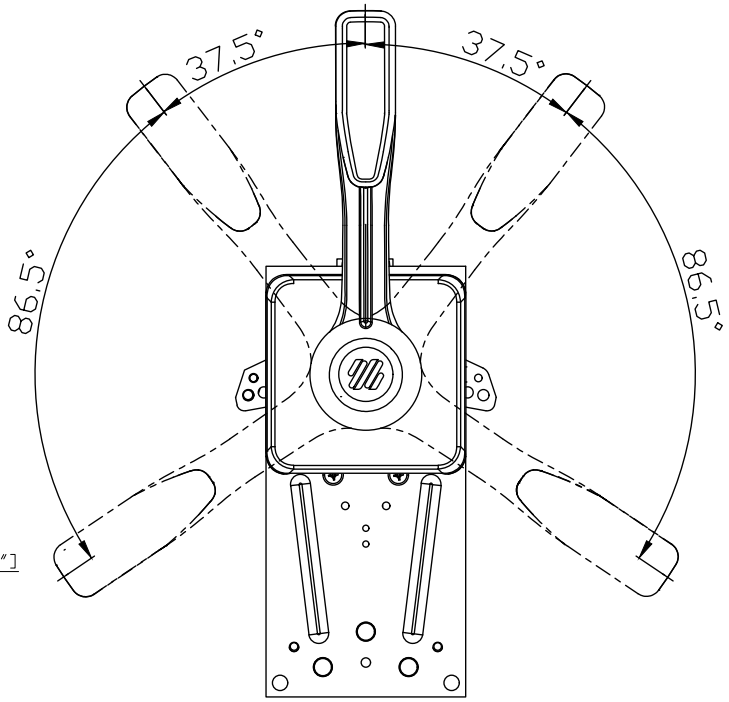

B186

B120 - B120-NT - B120/KS - B120/KS-NT
Single lever side mount controls



B120B



B120W



B120B-NT
B120W-NT

Single lever / dual action control to operate both throttle and shift.
Suitable for any type of boat with outboard or sterndrive engines.

- Enables easy and safe shifting by preventing accidental gear engagement unless engine is idling
- Provided with a throttle friction system adjustable from outside
- Push-in button for throttle operation in neutral (engine warm-up)
- Provided with positive lock-in neutral to prevent accidental gear engagement
- X41 (with IP67 Protection) and X48 optional neutral safety switches available to prevent in-gear starting
- Exceeds EN ISO 11547 standards when X41 and X48 safety switch is installed

B120B	1A0044121L	Black, with trim, with no emergency safety switch
B120W	1A0044123R	White, with trim, with no emergency safety switch
B120B-NT	1A0044140R	Black, with no trim, with no emergency safety switch
B120W-NT	1A0044138E	White, with no trim, with no emergency safety switch
B120B/KS-NT	1A0044141T	Black, with no trim, with emergency safety switch
B120W/KS-NT	1A0044139G	White, with no trim, with emergency safety switch
B120B/KS	1A0044122N	Black, with trim, with emergency safety switch
B120W/KS	1A0044124T	White, with trim, with emergency safety switch

Lever	Single lever
Lever control	Dual action control
Assembly	Side mount
Applications	Outboard, sterndrives
Version	Fully mechanical
Adjustable friction	Yes
Engine warm up mode	Yes
Positive lock in neutral	Yes
Power trim switch	Yes
Emergency Safety Switch	Provided on the KS version
Lever Stroke	+/- 110°
X41 Neutral Safety Switch - with IP67 Protection	Not included - to be ordered separately
X48 Neutral Safety Switch	Not included - to be ordered separately
EN ISO 11547	Yes, when X41 or X48 safety switch are installed
Control cables	C2, C8, MachZero
Control cables that require a connection kit	C5, Mach5 (K74); C36, Mach36 (K75); C14, Mach14 (K76);)



B120B/KS



B120W/KS



B120B/KS-NT
B120W/KS-NT

Control cables

- For use with Ultraflex C2, C8 and MachZero control cables
- Ultraflex C5 and Mach5 cables require the K74 - 1A0044170A connection kit
- Ultraflex C36 and Mach36 cables require the K75 - 1A0044171C connection kit
- Ultraflex C14 and Mach14 cables require the K76 - 1A0044172E connection kit

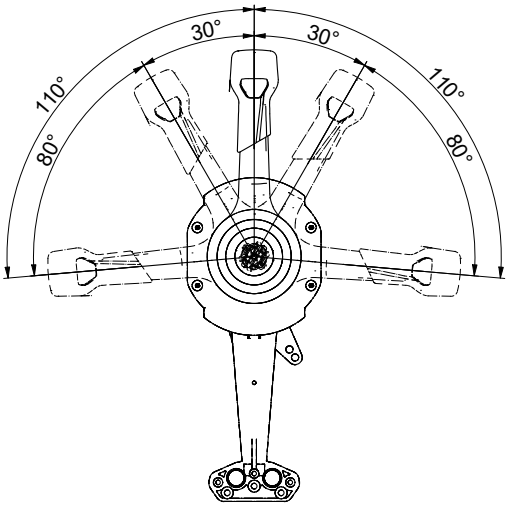

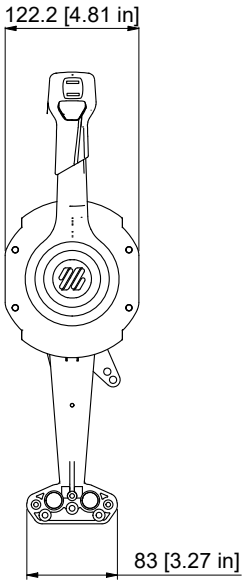

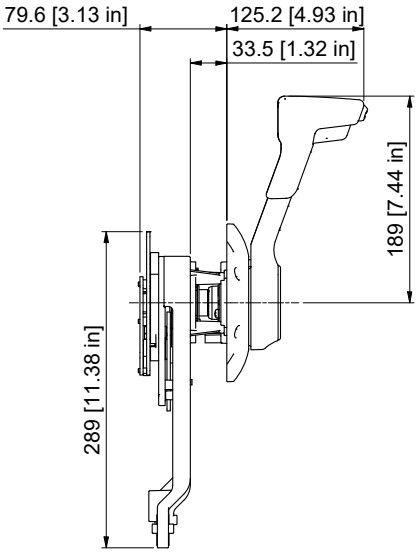

B120

B110 - B110/KS
Single lever console mount controls



B110B



B110W



Single lever / dual action control to operate both throttle and shift.
Suitable for any type of boat with outboard engine or sterndrive units.

- Enables easy and safe shifting by preventing accidental gear engagement unless engine is idling
- Provided with an easy adjustable brake tension release system
- Push-in button for throttle operation in neutral (engine warm-up)
- Provided with positive lock-in neutral to prevent accidental ingaging
- X41 (with IP67 Protection) and X48 optional neutral safety switches available to prevent in-gear starting
- Exceeds EN ISO 11547 standards when X41 and X48 safety switch is installed
- Center console trim switch thumb operated

B110B	1A0039367S	Black, with trim, with no emergency safety switch
B110W	1A0043521Y	White, with trim, with no emergency safety switch
B110B/KS	1A0043522A	Black, with trim, with emergency safety switch
B110W/KS	1A0043523C	White, with trim, with emergency safety switch

Lever	Single lever
Lever control	Dual action control
Assembly	Side mount
Applications	Outboard, sterndrives
Version	Fully mechanical
Adjustable friction	Yes
Engine warm up mode	Yes
Positive lock in neutral	Yes
Power trim switch	Yes
Emergency Safety Switch	Provided on the KS version
Lever Stroke	+/- 110°
X41 Neutral Safety Switch - with IP67 Protection	Not included - to be ordered separately
X48 Neutral Safety Switch	Not included - to be ordered separately
EN ISO 11547	Yes, when X41 or X48 safety switch are installed
Control cables	C2, C8, MachZero
Control cables that require a connection kit	C5, Mach5 (K74); C36, Mach36 (K75); C14, Mach14 (K76);)



B110B/KS



B110W/KS

Control cables

- For use with Ultraflex C2, C8 and MachZero control cables
- Ultraflex C5 and Mach5 cables require the K74 - 1A00044170A connection kit
- Ultraflex C36 and Mach36 cables require the K75 - 1A00044171C connection kit
- Ultraflex C14 and Mach14 cables require the K76 - 1A00044172E connection kit

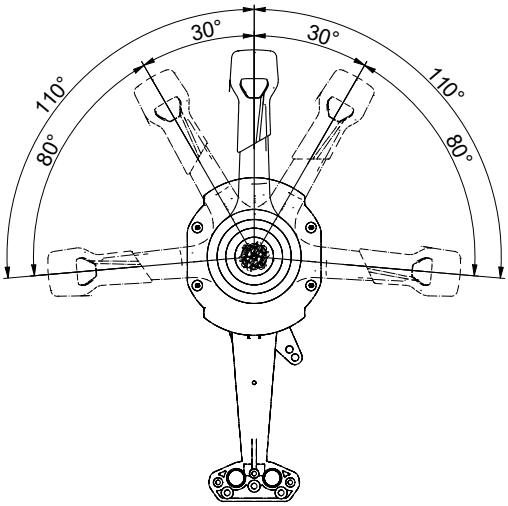

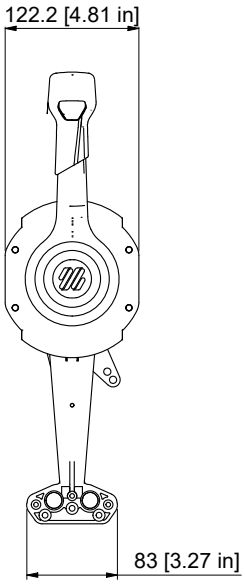

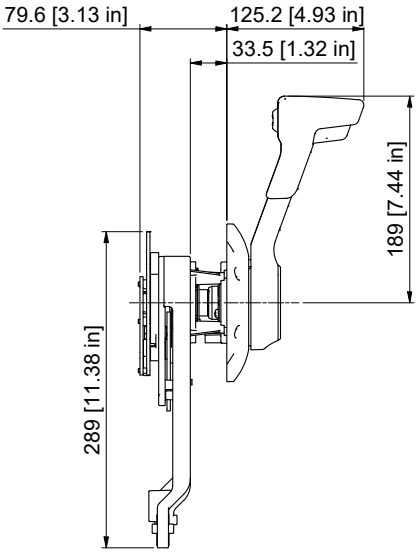

B110

B110-ETC (Electronic Throttle Control)
Hybrid single lever console mount controls



B110B-ETC



B110W-ETC



B110 ETC (Electronic Throttle Control) is a Single lever / dual action control to operate both throttle and shift and is a version of the B110 Control box Available on request.
The sensor has an analog output signal which can be single or redundant.
The output voltage range is chosen by the customer between 0 and 5V. Power supply 5V +/-10%, linearity +/-1%.
For ETC controls please contact our technical Service for Custom Configuration.

Lever	Single lever
Lever control	Dual action control
Assembly	Side mount
Applications	Outboard, sterndrives
Version	Hybrid - mechanical shift, electric throttle
Electronic Throttle Control	Yes
Output voltage range	Chosen by the customer between 0 & 5V
Power supply	5V +/-10%, linearity +/-1%
Adjustable friction	Yes
Engine warm up mode	Yes
Positive lock in neutral	Yes
Power trim switch	Yes
Emergency Safety Switch	Provided on the KS version
Lever Stroke	+/- 110°
X41 Neutral Safety Switch - with IP67 Protection	Included
X48 Neutral Safety Switch	Not included - to be ordered separately
EN ISO 11547	Yes, when X41 or X48 safety switch are installed
Control cables	C2, C8, MachZero
Control cables that require a connection kit	C5, Mach5 (K74); C36, Mach36 (K75); C14, Mach14 (K76);)

B110B-ETC	1A0043751S	Black, with trim, with no kill switch
B110W-ETC	1A0043750P	White with trim, with no kill switch
B110B/KS-ETC	1A0043749F	Black, with trim, with kill switch
B110W/KS-ETC	1A0043748D	White, with trim, with kill switch



B110B/KS-ETC



B110W/KS-ETC

B110B-ETC
B110W-ETC

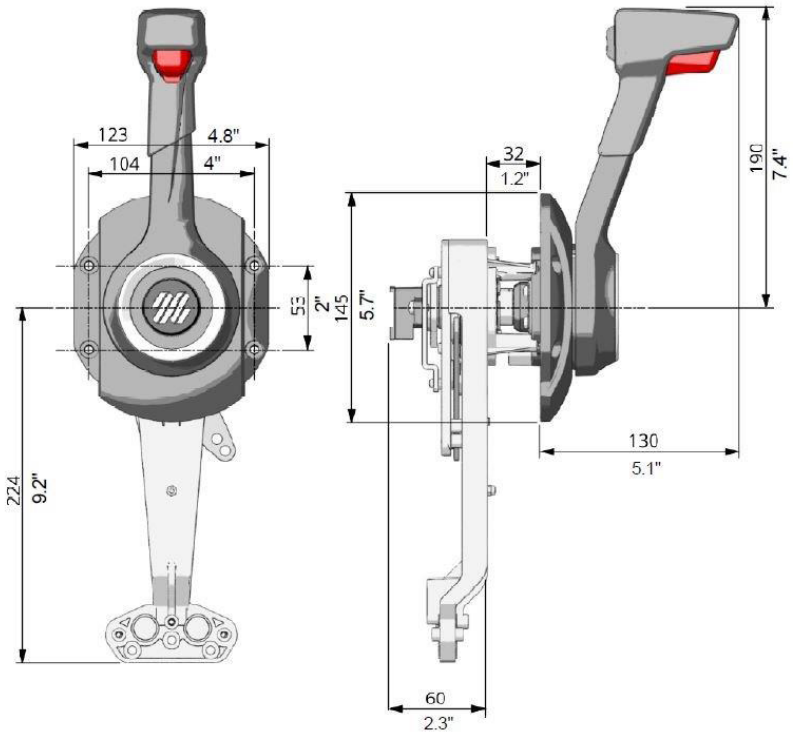

Suitable for any type of boat with outboard engine or sterndrive units.

- Enables easy and safe shifting by preventing accidental gear engagement unless engine is idling
- Provided with a throttle friction system adjustable from outside.
- Push-in button for throttle operation in neutral (engine warm-up)
- Positive lock-in neutral to prevent accidental ingaging
- X41(IP67 protection) 1A0038130F and X48 - 1A0043527L (optional) safety switches available to prevent in-gear starting
- Exceeds EN ISO 11547 standards when X41 or X48 safety switch is installed
- Center console trim switch thumb operated

Control cables

- For use with Ultraflex C2, C8 and MachZero control cables
- Ultraflex C5 and Mach5 cables require the K74 – 1A0044170A connection kit
- Ultraflex C36 and Mach36 cables require the K75 - 1A0044171C connection kit
- Ultraflex C14 and Mach14 cables require the K76 - 1A0044172E connection kit

NOTE: Customizable configuration for the ETC hybrid controls is available contacting our Technical Service

B110B/KS-ETC
B110W/KS-ETC

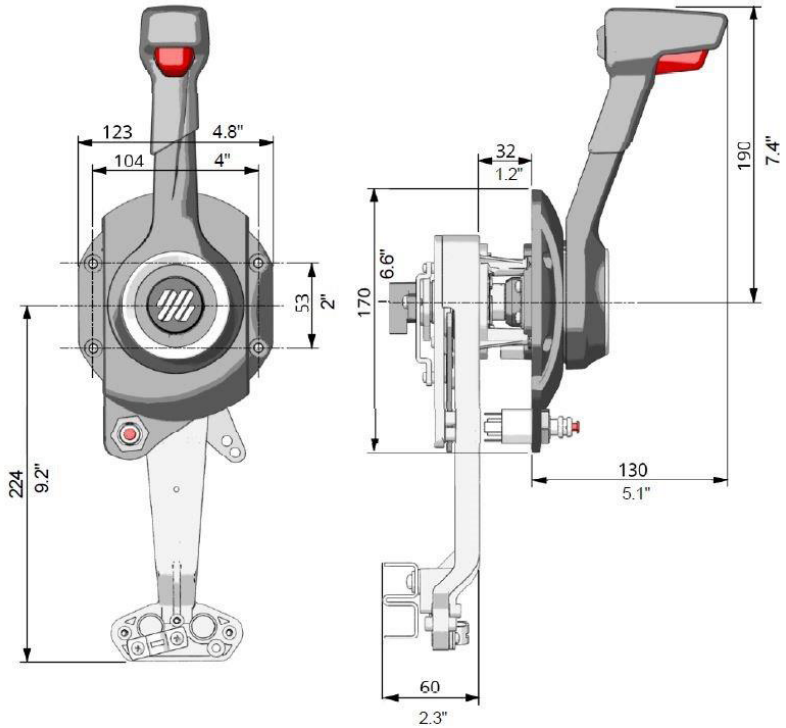

B89 -B90
Single lever side mount controls



B90



B89

Single lever / dual action control to operate both throttle and shift.
Suitable for any type of boats with outboard, inboard or I/O power plants.

- Enables easy and safe shifting by preventing accidental gear engagement unless engine is idling
- Can be installed horizontally or vertically, on the starboard or port side of the boat
- Made of painted marine aluminum
- Pull-out handle disengages shift for warm-up
- Neutral safety switch X12 – 1A0034543Q (optional) prevents in-gear starting
- Exceeds EN ISO 11547 standards when X12 safety switch is installed
- Provided with a positive lock-in neutral to prevent accidental gear engagement

Control cables
- For use with all Ultraflex engine control cables except C22, C36 and MACH36.
- Ultraflex C5, C16 and MACH5 cables require K35 – 1A0034730U connection kit.
- To connect C14 and MACH14 cables to engine, use K51 – 1A0032526N connection kit.

Lever	Single lever
Lever control	Dual action control
Assembly	Side mount
Applications	Inboard
Material	Painted marine aluminum
Version	Fully mechanical
Adjustable friction	No
Warm-up mode	Yes
Positive lock-in neutral	Yes
Power trim switch	No
Lever Stroke	+/- 95°
X12 Neutral Safety Switch	Not included - to be ordered separately
EN ISO 11547	Yes, when X12 safety switch is installed
Control cables	C2, C8, MachZero
Control cables that require a connection kit	C5, C16, Mach5 (K35); C14, Mach14 (K51);

B89	1A0036151G	Ivory finish with positive lock-in neutral.
B90	1A0036152H	Black finish with positive lock-in neutral.

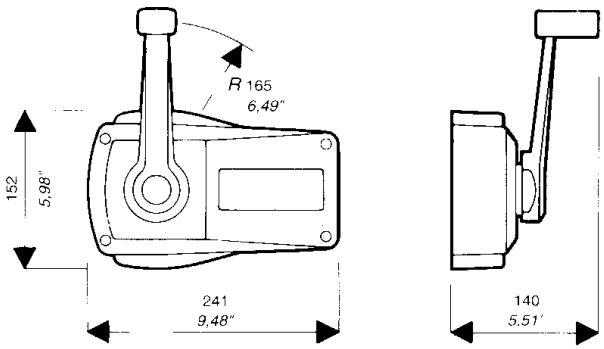


Lock-in neutral



B501BC



B501BCT/L



B502BC



B502BCT/L

Single-lever dual-action control units for throttle and inverter control. Available with and without lock in neutral and with and without trim.
• They make control safer by preventing the inverter from engaging if the throttle is not idling
• Available with chrome lever and matte black body, with various functions
• Pressing a button disengages the inverter during engine warm-up operation
• By means of safety switch X12 - 1A0034543Q (optional), engine starting is achieved only with the inverter in neutral position
• The trim located on the lever operates the 2 engines simultaneously, while the switch trims located on the binnacle allow independent adjustment of the engines
• Compliant with EN ISO 11547 with X12 neutral safety switch

Control cables
For use with all Ultraflex control cables
• C14 and MACH14 cables require no kit
• For C2, C8 and MACHZero cables the connection kit K59 – 1A0040144C is included
• C5, C16 and MACH5 cables require K60 Kit – 1A0040145E
• C36 and MACH36 cables require K62 Kit – 1A0040147J
• C22 cable requires K61 Kit – 1A0040146G

B501 - B502 series
Top mount controls

Top mount controls:

B501BC	1A0044148H	Single engine, with black base and chrome lever
B502BC	1A0044150U	Double engine, with black base and chrome lever

Top mount controls with trim

B501BCT	1A0044149K	Single engine, with black base, chrome lever and trim
B502BCT	1A0044151W	Double engine, with black base, chrome lever and trim

Top mount controls with trim and lock in neutral

B501BCT/L	1A0044146D	Single engine, with black base, chrome lever, trim and lock in neutral
B502BCT/L	1A0044147F	Double engine, with black base, chrome lever, trim and lock in neutral

Top mount controls with trim, lock in neutral and trolling valve

B501BCTT/L	1A0044280H	Single engine, with black base, chrome lever, trim, lock in neutral and trolling valve
B502BCTT/L	1A0044281K	Double engine, with black base, chrome lever, trim, lock in neutral and trolling valve



	B501BC-B502BC	B501-B502 with trim	B501-B502 with trim and lock in neutral	B501-B502 with trim, neutral lock, and trolling valve
Lever	Single lever/Twin lever for 2 engines			
Level control	Dual action control			
Assembly	Top mount			
Housing Material	High resistance ABS			
Applications	Inboard	Inboard, outboard & sterndrive	Inboard, outboard & sterndrive	Inboard, outboard & sterndrive
Version	Fully mechanical			
Adjustable friction	Yes			
Warm-up mode	Yes			
Positive lock-in neutral	No	No	Yes	Yes
Power trim switch	No	Yes	Yes	Yes
Trolling valve switch	No	No	No	Yes
X12 Neutral Safety Switch	Not included - to be ordered separately			
EN ISO 11547	Yes, when X12 safety switch is installed			
Control cables	C14, Mach14			
Control cables that require a connection kit	C2, C8, MachZero (K59 incluso); C5, C16, Mach5 (K60); C36, Mach36 (K62); C22 (K61)			

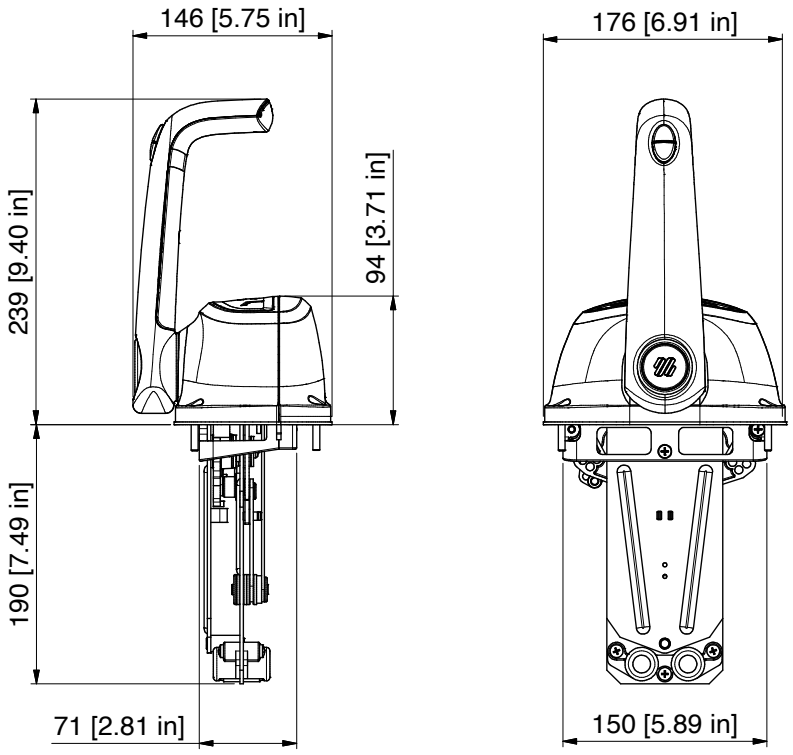

B501 Dimensions

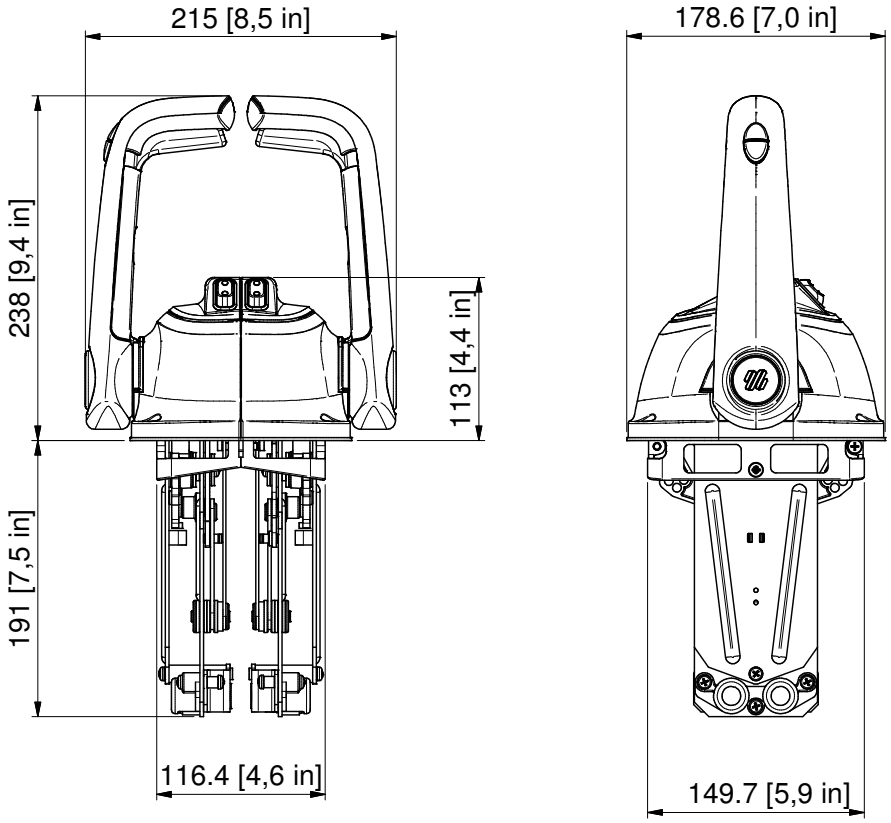

B502Dimensions

B65 - B76 - B73 - B77
Single lever top mount controls

B65
B76 with trim

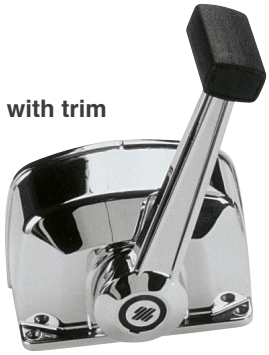

B73
B77 with trim



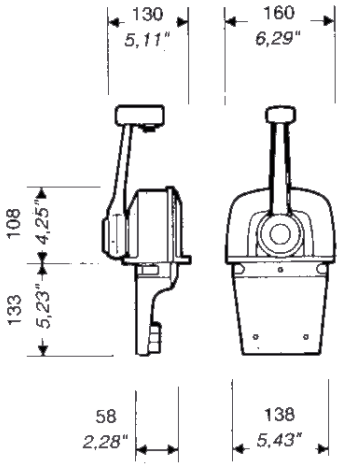

Single lever / dual action control to operate both throttle and shift.
Suitable for any type of boats with inboard (B65 e B73) outboard or I/O power plants (B76 e B77, Trim version)

- Enables easy and safe shifting by preventing accidental gear engagement unless engine is idling
- Made of marine aluminum, chrome plated or with a black powder coat finish
- Pull-out handle disengages shift for engine warm-up
- Neutral safety switch X12 – 1A0034543Q (optional) prevents in-gear starting
- Exceeds EN ISO 11547 standards when X12 safety switch is installed

- **B76 and B77** models have a power Trim switch conveniently located in the handle grip that enables for easy tilting of the engine.

Control cables
- For use with all Ultraflex engine control cables except C22, C36 and MACH36.
- Ultraflex C5, C16 and MACH5 cables require K35 kit – 1A0034730U

Lever	Single lever
Lever control	Dual action
Assembly	Top mount
Applications	Inboard (B65, B73), outboard & sterndrive (B76, B77)
Version	Fully mechanical
Material	Marine aluminum
Adjustable friction	No
Warm-up mode	Yes
Positive lock-in neutral	No
Power trim switch	Provided on the B76, B77 versions
X12 Neutral Safety Switch	Not included - to be ordered separately
EN ISO 11547	Yes, when X12 safety switch is installed
Control cables	C2, C8, MachZero, C14, Mach14
Control cables that require a connection kit	C5, C16, Mach5 (K35)

B65	1A0034731V	Chromed Single lever control for one engine.
B76	1A0035312E	Chromed Single lever control for one engine, with trim.
B73	1A0035007U	Single lever control for one engine, Black Powder coat finish
B77	1A0035313F	Single lever control for one engine, Black Powder coat finish, with trim



Handle with trim

B66 - B78 - B74 - B79
Single lever top mount controls

B66
B78 with trim



B74
B79 with trim



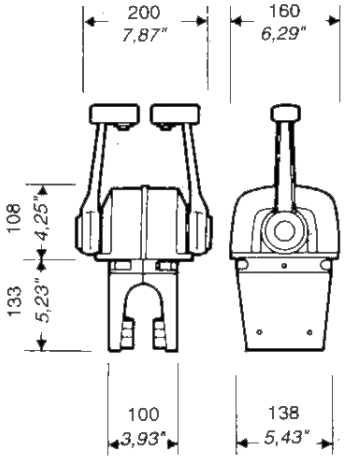

Twin lever control for 2 engines
Dual action control to operate both throttle and shift.
Suitable for any type of boats with inboard (B66 e B74) outboard or I/O power plants (B78 e B79, Trim version)

- Enables easy and safe shifting by preventing accidental gear engagement unless engine is idling
- Made of marine aluminum, chrome plated or with a black powder coat finish
- Pull-out handle disengages shift for engine warm-up
- Neutral safety switch X12 – 1A0034543Q (optional) prevents in-gear starting
- Exceeds EN ISO 11547 standards when X12 safety switch is installed

- **B78 and B79** models have a power Trim switch conveniently located in the handle grip that enables for easy tilting of the engine.

Control cables
- For use with all Ultraflex engine control cables except C22, C36 and MACH36.
- Ultraflex C5, C16 and MACH5 cables require K35 kit – 1A0034730U

Lever	Twin lever for 2 engines
Level control	Dual action control
Assembly	Top mount
Applications	Inboard (B66, B74), outboard & sterndrive (B78, B79)
Version	Fully mechanical
Materials	Marine aluminum
Adjustable friction	No
Warm-up mode	Yes
Positive lock-in neutral	No
Power trim switch	Provided on the B78, B79 versions
X12 Neutral Safety Switch	Not included - to be ordered separately
EN ISO 11547	Yes, when X12 safety switch is installed
Control cables	C2, C8, MachZero, C14, Mach14
Control cables that require a connection kit	C5, C16, Mach5 (K35)

B66	1A0034732W	Chromed twin lever control for two engines.
B78	1A0035314G	Chromed twin lever control for two engines, with trim
B74	1A0035008B	Twin lever control for two engines, Black Powder coat finish
B79	1A0035315H	Twin lever control for two engines, Black Powder coat finish, with Trim



Handle with trim

B301 - B302
“Low profile” single lever top mount controls

Compact single lever controls offering a unique low profile style compared to other controls available on the market
Single lever / dual action control to operate both throttle and shift.
Suitable for any type of boat with inboard engine

- Enables easy and safe shifting by preventing accidental gear engagement unless engine is idling
- Made of marine aluminum, chrome plated
- Push in button disengages shift for engine warm-up
- Neutral safety switch X12 – 1A0034543Q (optional) prevents in-gear starting
- Exceeds EN ISO 11547 standards when X12 safety switch is installed

Control cables
- For use with all Ultraflex control cables
– C14 and MACH14 cables require no kit
– for C2, C8 and MACHZero cables the connection kit K59 – 1A0040144C is included
– C5, C16 and MACH5 cables require K60 Kit – 1A0040145E
– C36 and MACH36 cables require K62 Kit – 1A0040157J
– C22 cable requires K61 Kit – 1A0040146G



B301CR



B302CR



2 X75 Optional



B302CR + 2 X75

B301CR	1A0040140U	Single lever for one engine
B302CR	1A0040141W	Twin lever for two engines
X75	1A0040662B	Silver knob optional

Lever	Single lever
Lever control	Dual action control
Assembly	Top mount
Applications	Inboard
Version	Fully mechanical
Material	Chromed marine aluminum
Adjustable friction	Yes
Wam-up button	Yes
Positive lock-in neutral	No
Power trim switch	No
X12 Neutral Safety Switch	Not included - to be ordered separately
EN ISO 11547	Yes, when X12 safety switch is installed
Control cables	C14, Mach14
Control cables that require a connection kit	C2, C8, MachZero (K59 incluso); C5, C16, Mach5 (K60); C36, Mach36 (K62); C22 (K61);

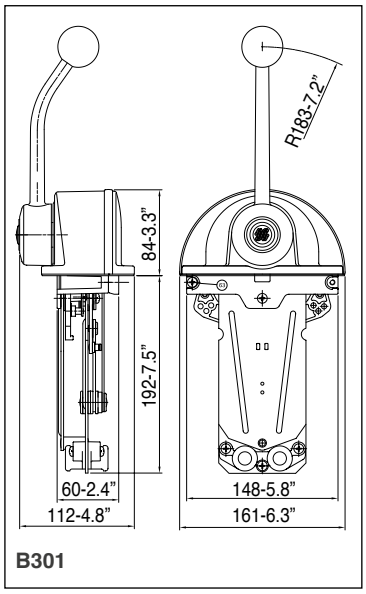

B301

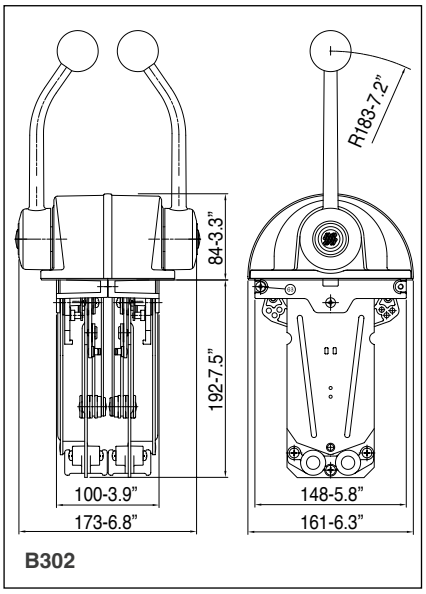

B302

B301 - B302
“Low profile” single lever top mount controls

Compact single lever controls offering a unique low profile style compared to other controls available on the market
Single lever / dual action control to operate both throttle and shift.
Suitable for any type of boat with inboard engine

- Enables easy and safe shifting by preventing accidental gear engagement unless engine is idling
- Made of marine aluminum, with black powder coat finish
- Push in button disengages shift for engine warm-up
- Neutral safety switch X12 – 1A0034543Q (optional) prevents in-gear starting
- Exceeds EN ISO 11547 standards when X12 safety switch is installed

Control cables
- For use with all Ultraflex control cables
– C14 and MACH14 cables require no kit
– for C2, C8 and MACHZero cables the connection kit K59 – 1A0040144C is included
– C5, C16 and MACH5 cables require K60 Kit – 1A0040145E
– C36 and MACH36 cables require K62 Kit – 1A0040157J
– C22 cable requires K61 Kit – 1A0040146G



B301B



B302B



2 X75 Optional



B302B + 2 X75

B301B	1A0040142Y	Single lever for one engine
B302B	1A0040143A	Twin lever for two engines
X75	1A0040662B	Silver knob optional

Lever	Single lever
Lever control	Dual action control
Assembly	Top mount
Applications	Inboard
Version	Fully mechanical
Material	Black marine aluminum
Adjustable friction	Yes
Warm-up button	Yes
Positive lock-in neutral	No
Power trim switch	No
X12 Neutral Safety Switch	Not included - to be ordered separately
EN ISO 11547	Yes, when X12 safety switch is installed
Control cables	C14, Mach14
Control cables that require a connection kit	C2, C8, MachZero (K59 incluso); C5, C16, Mach5 (K60); C36, Mach36 (K62); C22 (K61);

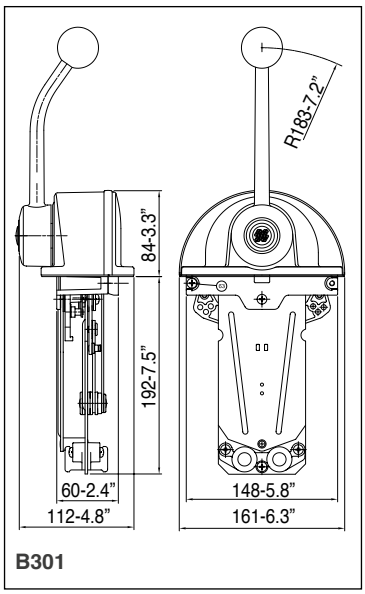

B301

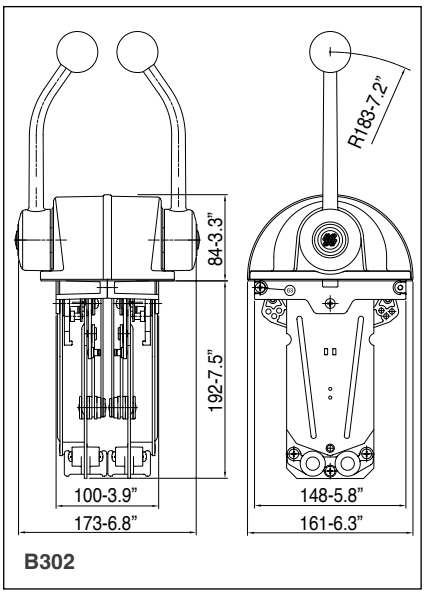

B302

B103 - B104
Single lever top mount controls

Single lever / dual action control to operate both throttle and shift.
Suitable for any type of boat with inboard engine

- Enables easy and safe shifting by preventing accidental gear engagement unless engine is idling
- Made of chrome plated marine aluminum
- Pull-out handle disengages shift for warm-up
- Neutral safety switch X43 – 1A0038160L (optional) prevents in-gear starting
- Exceeds EN ISO 11547 standards when X43 safety switch is installed

Control cables

- For use with C2, C8 and MACHZero Ultraflex engine control cables
- Only for B103, To connect C22 cable use **K33** – 1A0038378D connection kit



B103



B104



B104+ 2 X55

B103	1A0037923K	Single lever control for one engine
B104	1A0037924L	Twin lever control for two engines
X55	1A0039421V	Silver knob Optional

Lever	Single lever
Lever control	Dual action control
Assemby	Top mount
Applications	Inboard
Version	Fully mechanical
Material	Marine aluminum
Pull-out handle for warm-up	Yes
Positive lock-in neutral	No
Power trim switch	No
X43 Neutral Safety Switch	Not included - to be ordered separately
EN ISO 11547	Yes, when X43 safety switch is installed
Control cables	C2, C8, MachZero
Control cables that require a connection kit	B103 - C22 (K33)

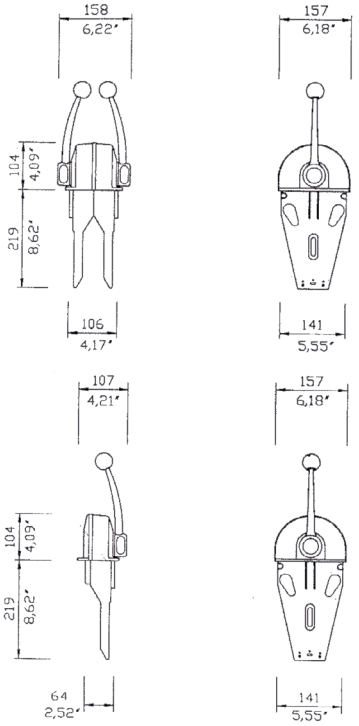

B505-ESTC (Electronic Shift Throttle Control)
Electric single lever top mount control

Ergonomic and compact single lever control, designed to control outboards and sterndrive electric engines.
B505-ESTC is **customizable**:
- Sensor output
- Lever switch (Trim - standard - or lock-in trigger)
- Switches



B505L-ESTC



B505-ESTC



- Compact single lever controls offering a unique low profile style compared to other controls available on the market
- Equipped with adjustable clutch to set the throttle hardness.
- Fully electronic lever; the installed position sensor output can be customized
- Sensor output is redundant and can be chosen by the customer between 0 and 5V
- Equipped with 3 customizable switches - Standard version has High idle, warm, dock functions
- Provided with an easy adjustable brake tension release system
- Positive lock-in neutral to prevent accidental ingaging
- Equipped with a trim switch (standard version), but it's possible to request the version with the lock-in trigger, instead of the trim function.
- Thermoplastic material with a soft touch grip.

For the sensor configuration of B505-ESTC control, please contact our Technical Service Department.



Customizable switches

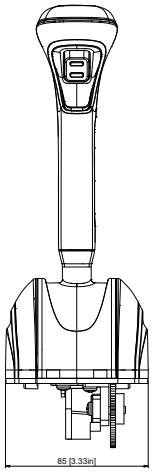

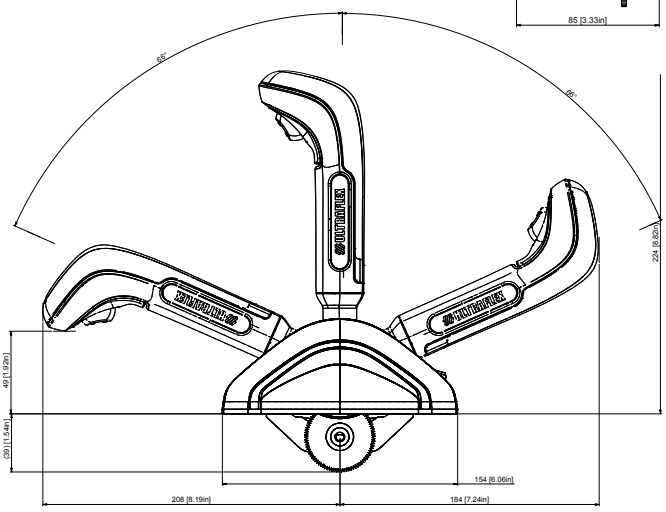

Lever	Single lever
Lever control	Dual action control
Assembly	Top mount
Applications	Inboard, outboard, sterndrives, jet
Version	Electronic
Electronic Throttle Control	Yes
Output voltage range	Chosen by the customer between 0 & 5V
Power supply	5V +/-10%, linearity +/-1%
Adjustable friction	Yes
Engine warm up mode	Yes, if present on keypad
Positive lock-in neutral	Yes, in the locked version
Power trim switch	Yes, in the trim version
Emergency Safety Switch	No
Lever Stroke	+/- 66°

B505-ESTC	1A0043581T	Black, with trim, with no emergency safety switch
B505L-ESTC	1A0044145B	Black, with lock, with no emergency safety switch

B204 - B208
Twin lever top mount control - mechanical version

Two lever / single action control: each lever operates separately either the throttle or the shift
Suitable for any type of boat with inboard engine (with separate trim control) and jet.

- Flush mount suitable for exposed positions such as fly bridge
- Levers structure made of die cast zinc alloy provided with a soft thermoplastic ergonomical handgrip
- Adjustable friction to avoid throttle creep and positive detent for shift
- Provided with an interlock kit to prevent accidental gear engagement
- Adjustable ratchet for precise throttle operation obtained applying to the throttle lever the optional kit K52 – 1A0037382B
- Neutral safety switch **X12 –** 1A0034543Q (optional) prevents in-gear starting
- Raked throttle handle and straight gear handle for a better manoeuvering
- Exceeds EN ISO 11547 standards when **X12** safety switch is installed

Control Cables

- For use with Ultraflex C2, C8, MACHZero and all 33C style engine control cables
- Ultraflex C22 and all 43C style cables require K22 – 1A0034713Q connection kit



B204R with interlock



B208R with interlock

B204R	1A0037383C	Throttle and shift - black
B208R	1A0037654C	Throttle and shift - white

Lever	Single lever
Lever control	Single action control
Assembly	Top mount
Applications	Inboard, jet
Version	Fully mechanical
Adjustable friction	Yes
X12 safety switch	Not included - to be ordered separately
EN ISO 11547	Yes, when X12 safety switch is installed
Control cables	C2, C8, MachZero
Control cables that require a connection kit	C22 (K22)

B204R - B208R (ETC - ESC - ESTC)
Twin lever top mount control - hybrid version



Two lever / single action control: each lever operates separately either the throttle or the shift
Suitable for any type of boat with inboard engine (with separate trim control) and jet.

- Especially suitable for jet boats, throttle and/or shift control is provided by a 0-5V voltage signal.
- Flush mount suitable for exposed positions such as fly bridge
- Levers structure made of die cast zinc alloy provided with a soft thermoplastic ergonomical handgrip
- Adjustable friction to avoid throttle creep and positive detent for shift
- Provided with an interlock kit to prevent accidental gear engagement
- Adjustable ratchet for precise throttle operation obtained applying to the throttle lever the optional kit K52 – 1A0037382B
- Neutral safety switch **X12** – 1A0034543Q prevents in-gear starting
- Raked throttle handle and straight gear handle for a better manoeuvering
- Exceeds EN ISO 11547 standards when X12 safety switch is installed

Control cables

- For use with Ultraflex C2, C8, MACHZero and all 33C style engine control cables
- Ultraflex C22 and all 43C style cables require K22 – 1A0034713Q connection kit

Black finish

B204R-ETC	1A0042832L	Throttle controlled by an electric signal, shift by a mechanical cable
B204R-ESC	1A0042775B	Shift controlled by an electrical signal, throttle by a mechanical cable
B204R-ESTC	1A0042776D	Throttle and shift controlled by an electrical signal

White finish

B208R-ETC	1A0042835T	Throttle controlled by an electric signal, shift by a mechanical cable
B208R-ESC	1A0042833N	Shift controlled by an electrical signal, throttle by a mechanical cable
B208R-ESTC	1A0042834R	Throttle and shift controlled by an electrical signal

Lever	Two lever
Lever control	Single action control
Assembly	Top mount
Applications	Inboard, jet
Version	Hybrid
Adjustable friction	Yes
Output voltage range	Chosen by the customer between 0 & 5V
X12 safety switch	Included
EN ISO 11547	Yes, when X12 safety switch is installed
Control cables	C2, C8, MachZero
Control cables that require a connection kit	C22 (K22)

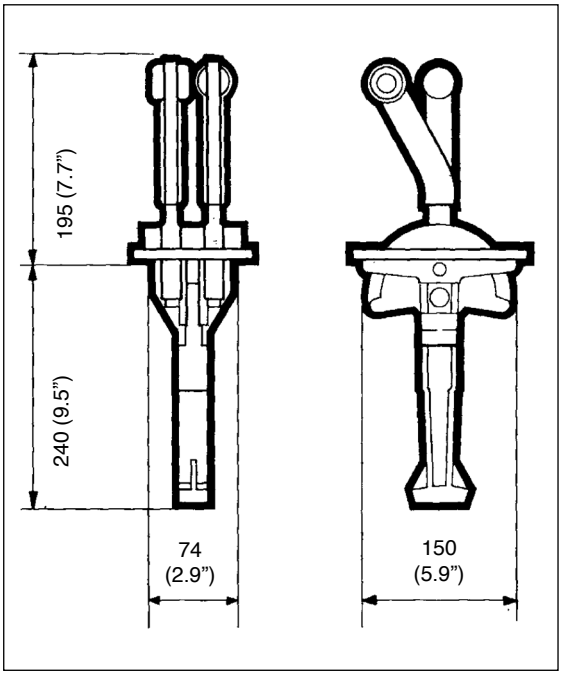

B46 - B58 - B50 - B59
Twin lever top mount controls

Two lever / single action control: each lever operates separately either the throttle or the shift.
Suitable for any type of boat with inboard engine.

- Flush mount suitable for exposed positions such as fly bridge
- Made of marine aluminum with chrome plated lever
- Adjustable friction to avoid throttle creep and positive detent for shift. Both can be adjusted from the outside
- Neutral safety switch X12 – 1A0034543Q (optional) prevents in-gear starting
- B58 model is provided with an interlock kit to prevent accidental gear engagement
- Exceeds EN ISO 11547 standards when X12 safety switch is installed

Control cables:
For use with Ultraflex C2, C8 and MACHZero engine control cables.
Ultraflex C22 cable requires K22 – 1A0034713Q connection kit



Bent levers
B46
B58 with interlock

Straight levers
B50
B59 with interlock

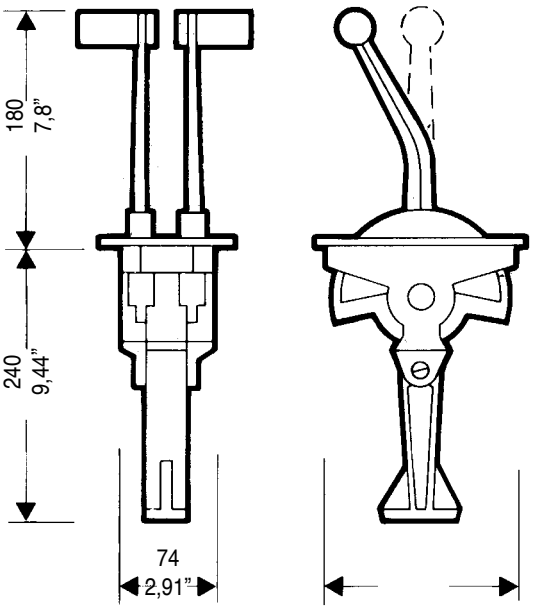

Lever	Two lever
Lever control	Single action control
Assembly	Top mount
Applications	Inboard
Version	Fully mechanical
Material	Marine aluminum
Adjustable friction	Yes
Lever Stroke	+/-95°
Positive lock in neutral	No
Power trim switch	No
X12 safety switch	Not included - to be ordered separately
EN ISO 11547	Yes, when X12 safety switch is installed
Control cables	C2, C8, MachZero
Control cables that require a connection kit	C22 (K22)

Bent levers

B46	1A0034461P	Throttle and shift
B46T	1A0034462Q	Throttle only
B46S	1A0034463R	Shift only
B58R	1A0034570W	Throttle and shift with interlock. Right hand installation
B58L	1A0034716T	Throttle and shift with interlock. Left hand installation

Straight levers

B50	1A0034464S	Throttle and shift
B50T	1A0034465T	Throttle only
B50S	1A0034466U	Shift only
B59R	1A0034571X	Throttle and shift with interlock. Right hand installation
B59L	1A0034717U	Throttle and shift with interlock. Left hand installation

B322
Twin lever top mount control

Two lever / single action control: each lever operates separately either the throttle or the shift.
Suitable for any type of boat with inboard engine

- Made of aluminum, chrome plated finish
- Throttle lever is provided with adjustable friction system and shift lever with forward, reverse and neutral detents
- Neutral safety switch X12 – 1A0034543Q (optional) prevents in-gear starting
- In dual station applications the L23 – 1A0031649B selector unit has to be used
- Exceeds EN ISO 11547 standards when X12 safety switch is installed

Control cables
- Use with all Ultraflex control cables

– C14 and MACH14 cables require no kit
– For C2, C8 and MACHZero cables the connection kit K67 – 1A0040705T is included
– C5, C16 and MACH5 cables require K63 kit – 1A0040757N
– C22 cable requires K64 kit – 1A0040758R
– C36 and MACH36 cables require K65 kit – 1A0040759T



B322

B322	1A0040669S	Throttle and shift
B322T	1A0040670A	Throttle only
B322S	1A0040673G	Shift only

Lever	Two lever
Lever control	Single action control
Assembly	Top mount
Applications	Inboard
Version	Fully mechanical
Material	Aluminum
Adjustable friction	Yes
X12 safety switch	Not included - to be ordered separately
EN ISO 11547	Yes, when X12 safety switch is installed
Control cables	C14, Mach14
Control cables that require a connection kit	C2, C8, MachZero (K59 incluso); C5, C16, Mach5 (K60); C36, Mach36 (K62); C22 (K64);

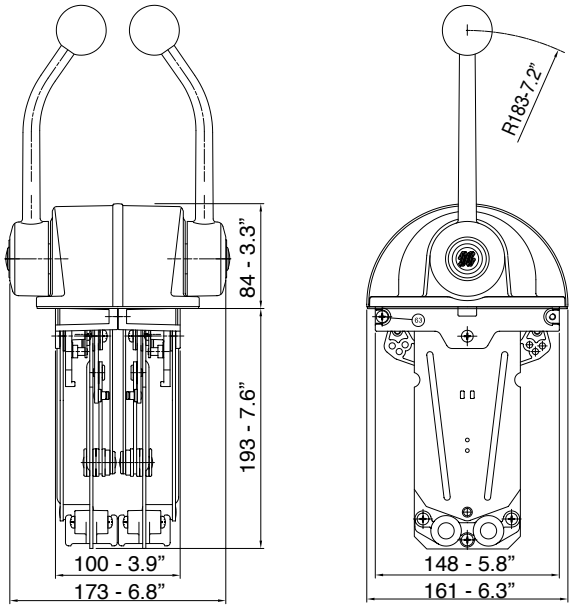

B322

B99 - B102
Twin lever top mount controls

Two lever / single action control: each lever operates separately either the throttle or the shift
Suitable for any type of boat with inboard engine

- Both versions are provided with the shift lever detents and with a friction system adjustable from the outside of the throttle lever
- Neutral safety switch X12 – 1A0034543Q (optional) prevents in-gear starting
- Exceeds EN ISO 11547 standards when X12 safety switch is installed
- Suitable for exposed positions such as fly bridge

Control cables
- For use with Ultraflex C2, C8 and MACHZero engine control cables
- Ultraflex C22 cable requires K32 – 1A0034662Z connection kit



B102



B99

B99	1A0036854N	Throttle and shift - Black painted with chrome levers
B102	1A0036899G	Throttle and shift - Black painted

Lever	Two lever
Lever control	Single action control
Assembly	Top mount
Applications	Inboard
Version	Fully mechanical
X12 safety switch	Not included - to be ordered separately
EN ISO 11547	Yes, when X12 safety switch is installed
Control cables	C2, C8 MachZero
Control cables that require a connection kit	C22 (K32);

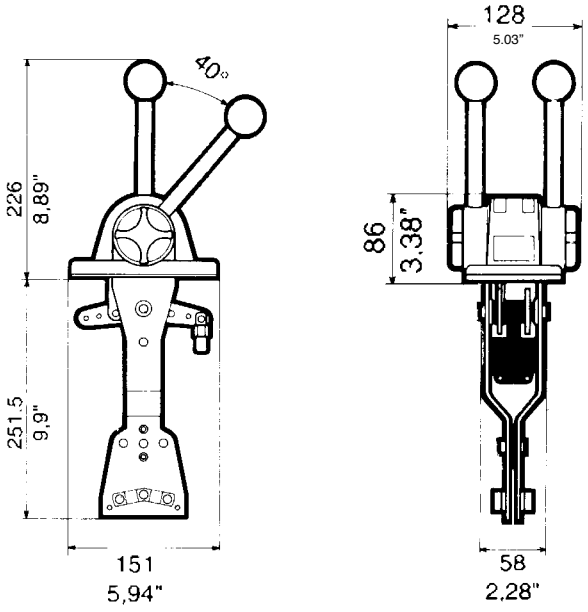

B47 - B49
Twin lever side mount controls

Suitable for small outboard engines.

• Made of nylon fiberglass with anodized aluminum levers
• Left or right side mount installation

Control cables
• For use with Ultraflex engine control cables:
– C14 and MACH14 with K23 – 1A0032773D connection kit
– C2, C8, and MACHZero with K25 – 1A0032775F connection kit
– C5 and MACH5 without connection kit



B49 B47

Lever	Two lever
Lever control	Single action control
Assembly	Side mount
Applications	Outboard
Version	Fully mechanical
X12 safety switch	Not included - to be ordered separately
EN ISO 11547	Yes, when X12 safety switch is installed
Control cables	C5, Mach5
Control cables that require a connection kit	C14, Mach14 (K23); C2, C8, MachZero (K25);

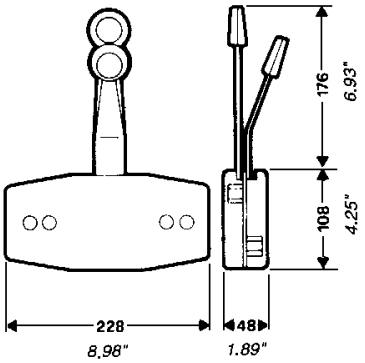

B47	1A0032770A	Light grey
B49	1A0033283S	Black

B35
Single action control box

• Lever and flange all stainless steel
• Flush side mount installation
• Particulary suitable for throttle control or hydraulic shift operation
• Provided with adjustable friction and detents

Control cables
– For use with Ultraflex C2, C8 and MACHZero engine control cables



B35

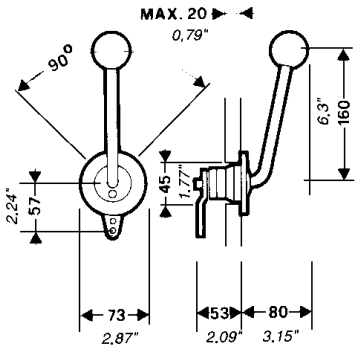

Lever control		Single action control
Assembly		Side mount
Version		Fully mechanical
Control cables		C2, C8, MachZero
B35	1A0032386A	Stainless steel

Accessories for control boxes

KB1 - 1A0039964L
Kit to connect C22 cable to B310, B183, B184 controls.

K22 - 1A0034713Q
Kit to connect C22 cable to top mount two lever control boxes, B46, B50, B58, B59, B204, B208, B322

K23 - 1A0032773D
Kit to connect C14 and MACH14 cables to B47 and B49 control boxes.

K25 - 1A0032775F
Kit to connect C2, C8 and MACHZero cables to B47 and B49 control boxes.

K32 - 1A0034662Z
Kit to connect C22 cable to top mount two lever control boxes B99 and B102.

K33 - 1A0038378D
Kit to connect C22 cable to B103 control box.

K35 - 1A0034730U
Kit to connect C5, C16 and MACH5 cables to single lever control boxes, except B301, B302, B103 and B104.

K51 - 1A0032526N
Kit to connect C14 and MACH14 cables to engine for use with B89 and B90 controls.

K59 - 1A0040144C
Kit to connect C2, C8 and MACHZero cables to B301 and B302 controls (supplied with the box).

K60 – 1A0040145E
Kit to connect C5, C16 and MACH5 cables to B301 and B302 control boxes.

K61 – 1A0040146G
Kit to connect C22 cable to B301 and B302 control boxes.

K62 – 1A0040147J
Kit to connect C36 and MACH36 cables to B301 and B302 control boxes.

K63 - 1A0040757N
Kit to connect C5, C16, MACH5 cables to B322 controls.

K64 - 1A0040758R
Kit to connect C22 cable to B322 controls.

K65 - 1A0040759T
Kit to connect C36 and MACH36 cables to B322 controls.

K67 - 1A0040705T
Kit to connect C2, C8 and MACHZero cables to B322 controls (supplied with the box)

K74 - 1A0044170A
Kit to connect C5 and MACH5 cables to B110 and B120controls

K75 - 1A0044171C
Kit to connect C36 and MACH36 cables to B110 and B120controls

K76 - 1A0044172E
Kit to connect C14 and MACH14 cables to B110 and B120 controls

K83 - 1A0042836V
Kit to connect C48 cable to B310, B183, B184 controls

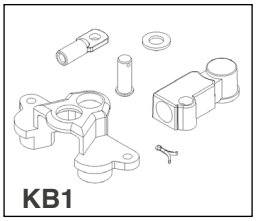
KB1

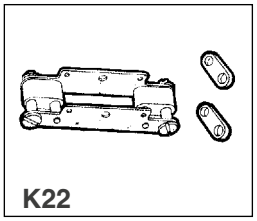
K22

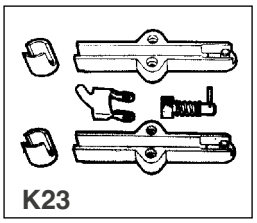
K23

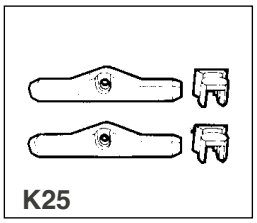
K25

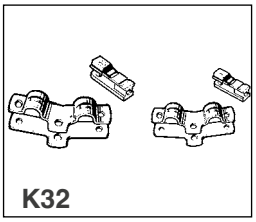
K32

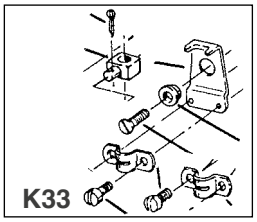
K33

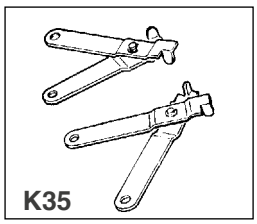
K35

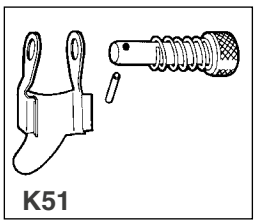
K51

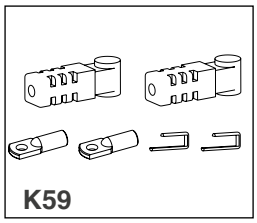
K59

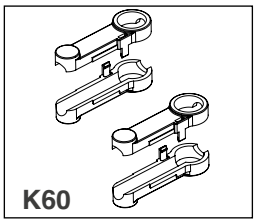
K60

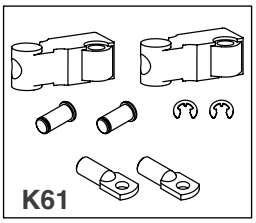
K61

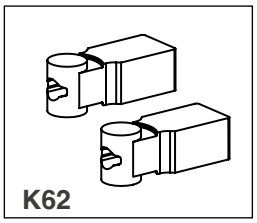
K62

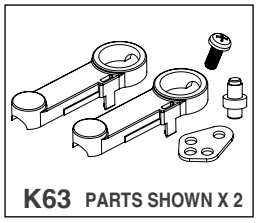
K63 PARTS SHOWN X 2

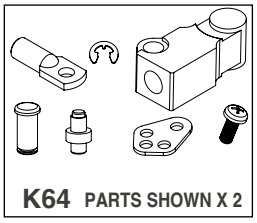
K64 PARTS SHOWN X 2

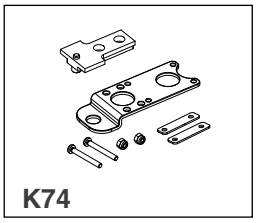
K74

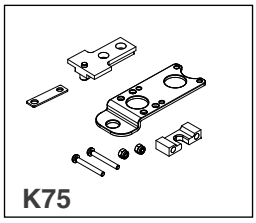
K75

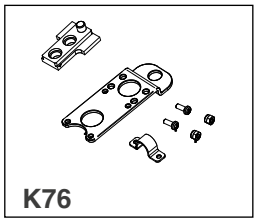
K76

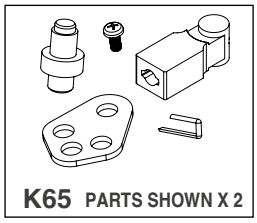
K65 PARTS SHOWN X 2

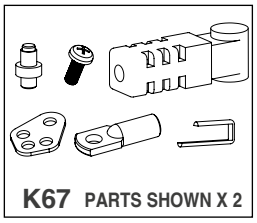
K67 PARTS SHOWN X 2

X12 - 1A0034543Q
Neutral safety switch to prevent in-gear starting.

X41 - 1A0038130F
Neutral safety switch to prevent in-gear starting, suitable for B400, B110, B120 and hybrid controls. IP67 protection.

X43 - 1A0038160L
Neutral safety switch to prevent in-gear starting, suitable for B103 and B104 controls.

X48 - 1A0043527L
Neutral safety switch to prevent in-gear starting, suitable for B110 and B120 controls. It allows to connect a double signal.IP67 protection.

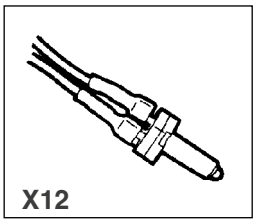
X12

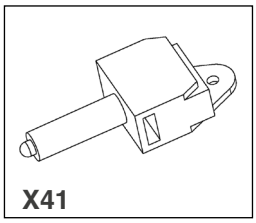
X41

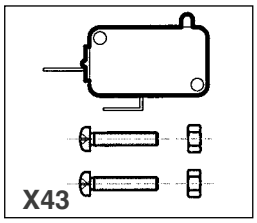
X43

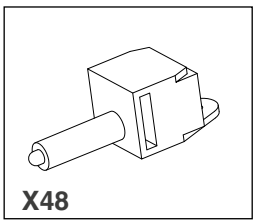
X48

Control box - control cable application matrix

Single lever controls

MODEL	B400	B183 - B184 - B186 - B85 B310 Series	B110 B120	B301 - B302 B501 Series	B103	B104	B73 - B74 B77 - B79	B89 - B90
C2	X	X	X	K59*	X	X	X	X
C8	X	X	X	K59*	X	X	X	X
C14	-	X	K76	X	-	-	X	X
C5	-	K35	K74	K60	-	-	K35	K35
C36	-	-	K75	K62	-	-	-	-
C16	-	K35	-	K60	-	-	K35	K35
C22	-	-	-	K61	K33	-	-	-
MACHZero	X	X	X	K59*	X	X	X	X
MACH5	-	K35	K74	K60	-	-	K35	K35
MACH36	-	-	K75	K62	-	-	-	-
MACH14	-	X	K76	X	-	-	X	X

***: Supplied with the control
X: No kit required
- : No connection

Twin lever controls

MODEL	B322	B46 - B50 - B58 B59 - B204R - B208R	B99 - B102	B47 - B49	B35
C2	K67*	X	X	K25	X
C8	K67*	X	X	K25	X
C14	X	-	-	K23	-
C5	K63	-	-	X	-
C36	K65	-	-	-	-
C16	K63	-	-	X	-
C22	K64	K22	K32	-	-
MACHZero	K67*	X	X	K25	X
MACH5	K63	-	-	X	-
MACH36	K65	-	-	-	-
MACH14	X	-	-	K23	-

***: Supplied with the control
X: No kit required
- : No connection

Engine control cables
How to measure



FOR NEW INSTALLATION, measure A + B distance from the control along an unobstructed cable routing to clutch and / or throttle connection.
Round this dimension off to the next whole foot: you will have your cable length.
We recommend that the cable bends have a minimum radius of about 8” (200 mm).
For outboard engine installations, it is necessary to add three feet to the obtained length, in order to allow the engine movement.
To determine the needed length of the REPLACEMENT CABLE, measure it from tip to tip.
When ordering, specify the cable length in feet, rounding the dimension off to the next whole value.
If any kit is required to complete the cable connection, consult the appropriate section in this catalogue.

OUTBOARD

A + B + 3’ (90 cm) = L

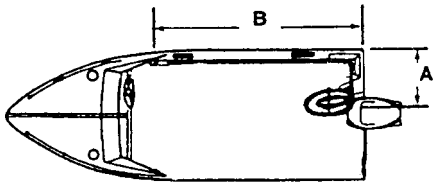

INBOARD/STERNDRIVE

A + B = L

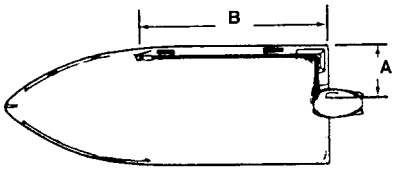

SELECTION OF ENGINE CONTROL CABLES		
ENGINE		**ULTRAFLEX ENGINE CONTROL CABLES**
OUTBOARD	Mercury® and Gen. II™ Controls	C36 - MACH36
	Mercury® Mariner® over 50 hp (37kW)	C5 - MACH5
	Mariner® up to 50 hp (37kW)	C16
	Force® Selva® Yamaha® Suzuki® Tohatsu® Honda® Nissan®	C2 - C8 - MACHZero
	Johnson® - Evinrude® - BRP®	After 1979 C14-MACH14
JET	Weber®	C40 - C48
	Rotax®	C40RT - C42RS
STERNDRIVE	Mercruiser® and Gen. II™ Controls	C36 - MACH36
	Mercruiser®	C5 - MACH5
	OMC® - BRP®	After 1979 C14-MACH14
	Volvo Penta® Yanmar® Volkswagen®	C2 - C8 MACHZero - C22
INBOARD		C2 - C8 - MACHZero - C22

MACH™ series control cables
High efficiency and flexibility

For the ultimate in efficiency and response, the Mach Series cables deliver unmatched results. They have been specifically designed to make even the most complex of cable installations result in smooth, easy and precise shift and throttle movement.

High Performance

The PATENTED “high performance” MACH™ Cables are the result of our decades of experience in producing high quality, long lasting, flexible cables.
The innovative core design maximizes efficiency and minimizes lost motion, while the exclusive design of the conduit provides extremely high level of flexibility.



Features & performance

- Available in the following configurations:
  - **MACHZero** - Universal style (like C2, C8)
  - **MACH5** - Mercury® style (like C5)
  - **MACH14** - Current OMC® - BRP® style (like C14)
  - **MACH36** - Gen II Mercury® style (like C36)
- Suitable for outboard – inboard and sterndrive engines
- High efficiency for smooth operation
- High flexibility for reduced bend radius. Ideal for long complex cable routings
- Maintenance free
- Stainless steel cables end fittings
- High resistance blue outer jacket against abrasion, UV and chemicals



MACHZero **MACH5** **MACH14** **MACH36**

Control cables for Jet engines

C48 Stroke: 84 mm (3.3”)
Shift and throttle cable for jet boats 40 Class. Suitable for Teleflex® controls. With K83 - 1A0042836V connection kit is suitable for use with Ultraflex B310, B183, B184 controls.

C40RT Throttle Cable for Rotax® jet engines

C42RS Shift Cable for Rotax® jet engines

C48



C40

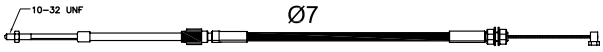

C48

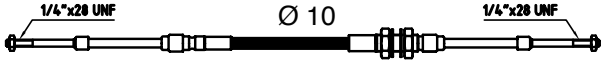

C40RT

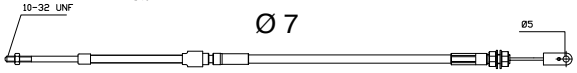

C42RS

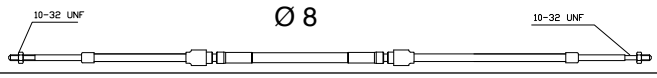

Engine control cables

C2 Stroke: 87 mm (3.4”)
For use with inboard, sterndrive and outboard engines with appropriate accessories.

C8 Stroke: 87 mm (3.4”)
For use with inboard, sterndrive and outboard engines, with appropriate accessories.

MACHZero 87 mm (3.4”)
For use with inboard, sterndrive and outboard engines.
Ideal for high performance applications, long cable runs and complex routings. Blue color jacket.

C14 Stroke: 75 mm (3”)
For BRP® - Evinrude® (OMC®) engines manufactured from 1979 to date.

MACH14 Stroke: 75 mm (3”).
For BRP® - Evinrude® (OMC®) engines manufactured from 1979 to date.
Blue color jacket
High performance applications

C36 Stroke: 87 mm (3.4”)
For Mercury® and Mercruiser® engines and Mercury® Generation II™ series controls.

MACH36 Stroke: 87 mm (3.4”).
For Mercury® and Mercruiser® engines and Mercury® Generation II™ series controls.
Blue color jacket
High performance applications

C5 Stroke: 95 mm (3.75”)
For Mercury® and Mercruiser® engines.

MACH5 Stroke: 95 mm (3.75”).
For Mercury® and Mercruiser® engines.
Blue color jacket
High performance applications

C16 Stroke: 80 mm (3.1”). For Mariner® engines up to 40 hp.

C22 Stroke: 80 mm (3.1”)
Stainless steel clamp fittings. Recommended for heavy duty applications.

B14 Stroke: 70 mm (2.8”)
Designed for throttle, fuel shut-off and other applications. Supplied with L13 and L14 clamp and shim.

C48 Stroke: 84 mm (3.3”)
Shift and throttle cable for jet boats 40 Class

C40RT Throttle Cable for Rotax® jet engines

C42RS Shift Cable for Rotax® jet engines

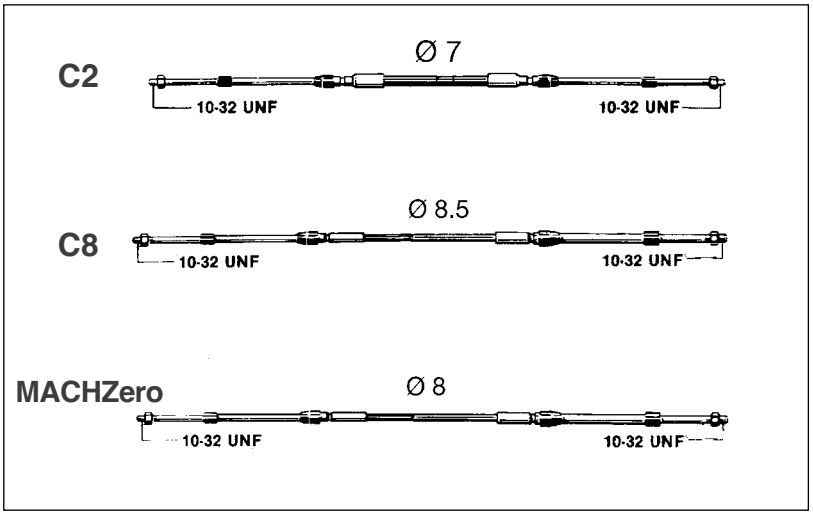

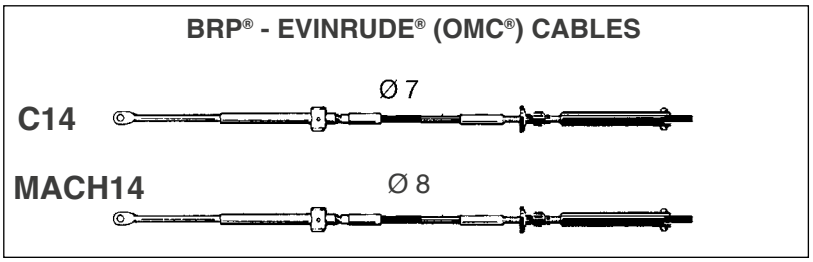

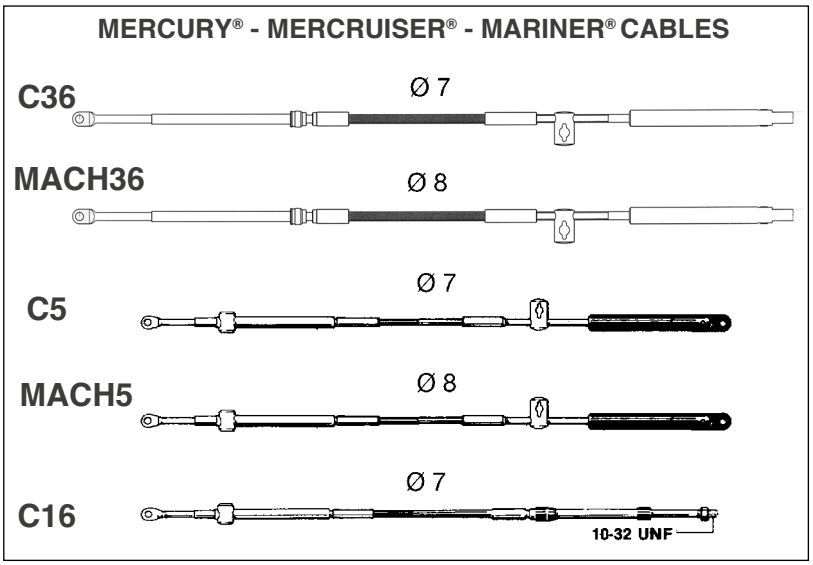

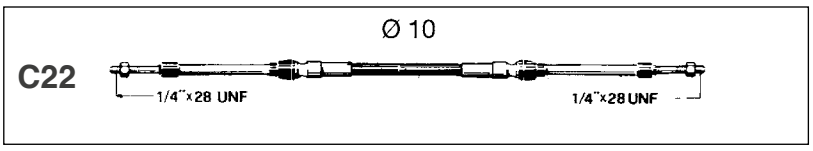

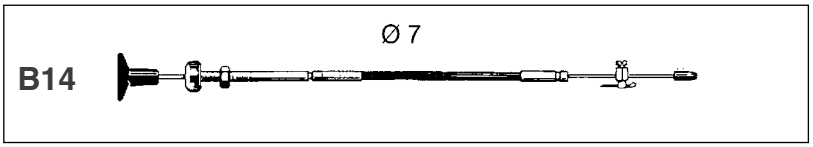

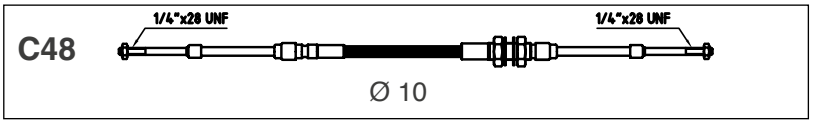

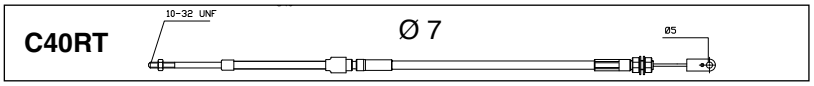

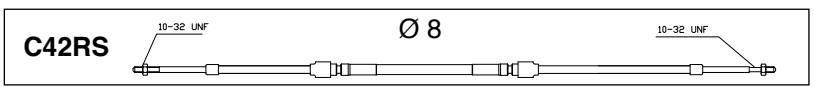

K68 - 1A0040895B
Recessed bulkhead support for B14 cable.


K68

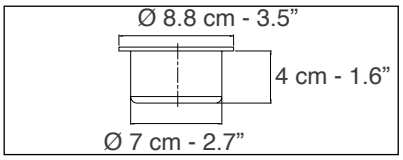

L2 - 1A0030324D
Cable clamp block

L3 - 1A0030325E
Shim and clamp block.
Fits C2, C8 and MACHCZero cables.

L7 - 1A0038078U
Ball joint 10-32 UNF.
Stainless steel, fits C2, C8 and MACHCZero cables.

L12 - 1A0030334F
Cable end fitting.
Fits C2, C8 and MACHCZero cables.

L13 - 1A0030335G
Stop collar. Fits B14 cables.

L14 - 1A0030336H
Cable clamp block.
Fits C2, C8 and MACHCZero cables.

L25 - 1A0031906D
Clevis 10-32 UNF.
Fits C2, C8 and MACHCZero cables.

L26 - 1A0033517N
Clevis 1/4” x 28 threaded.
Fits C22 cable.

L28 - 1A0043228A
0.3” cable terminal.
Fits C48 Jet boat cable.

K56 - 1A0039237C
Adapts C2, C8 and MACHCZero cables for use with Mercury engines.

K57 - 1A0039238E
Adapts C2, C8 and MACHCZero cables for use with BRP® - Evinrude engines.

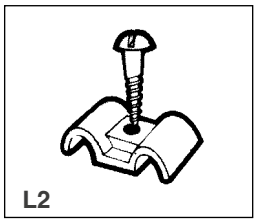
L2

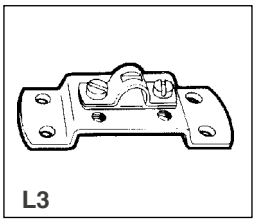
L3

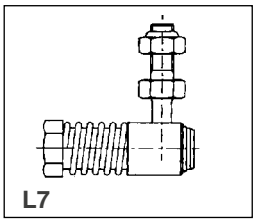
L7

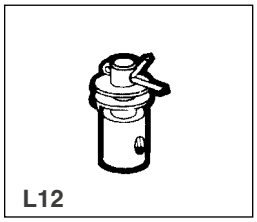
L12

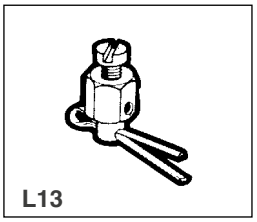
L13

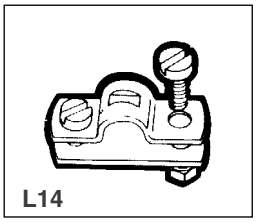
L14

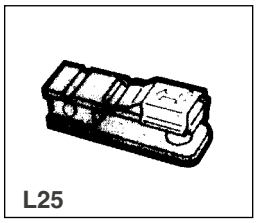
L25

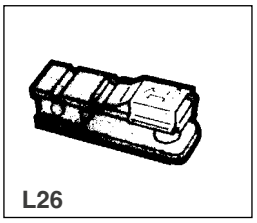
L26

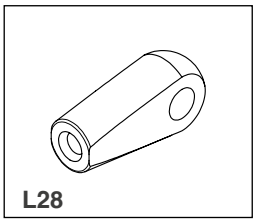
L28

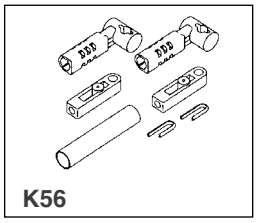
K56

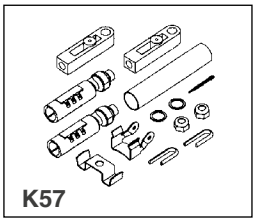
K57

Monofilament polyester braided sleevings for cables

Available in UFLEX

STANDARDS:

- Compliant with RoHS 2002/95/CE specifications
- NF EN 60684-1 (10-2003)
- NF EN 60684-2 (01-1998) modified by
  NF EN 60684-2/A1 (12-2003)
  NF EN 60684-2/A2 (05/2006)
- NF EN 60684-3 sheets 340 to 342 (4-2003)



NOMINAL INTERNAL DIAMETER	PART No. 1 m length	PART No. 10 m length	PART No. 20 m length	BULK PART No. 100 m length	ROLL WEIGHT Kg
10 mm (0.39”)	1C0023622S	1C0024853T	1C0024858D	1C0068180N	8,0
15 mm (0.59”)	1C0023623U	1C0024854V	1C0024859F	1C0020540Y	12,16
20 mm (0.78”)	1C0023624W	1C0024855X	1C0024863W	1C0020542C	17,8
25 mm (0.98”)	1C0023625Y	1C0024856Z	1C0024861S	1C0020543E	20,2
30 mm (1.18”)	1C0023626A	1C0024857B	1C0024862U	1C0020544G	27,0

Accessories for engine control cables

Throttle converter

The Throttle Converter allows to steer a tension controlled engine with a mechanical control box.

The system converts the mechanical input from a control cable into an electrical output to the engine.

Suitable either for new installations and refitting, it allows to use an existing mechanical control and connect it to the electrical input of the new engine's throttle.

Throttle Converters can be easily packed together for multiple engines.

- Equipped with 1 m (3.28 ft) mechanical cable with C2, C8 universal end fitting
- 76 mm (3") minimum stroke, 80 mm (3.15") maximum stroke.
- 30 cm (1 ft) electrical wire length

Throttle Converter is suitable for most of the voltage controlled engines. For further information, please contact our Technical Assistance Service

Mechanical side IP65
Sensor IP67

Throttle converter TC - 1A0043501S

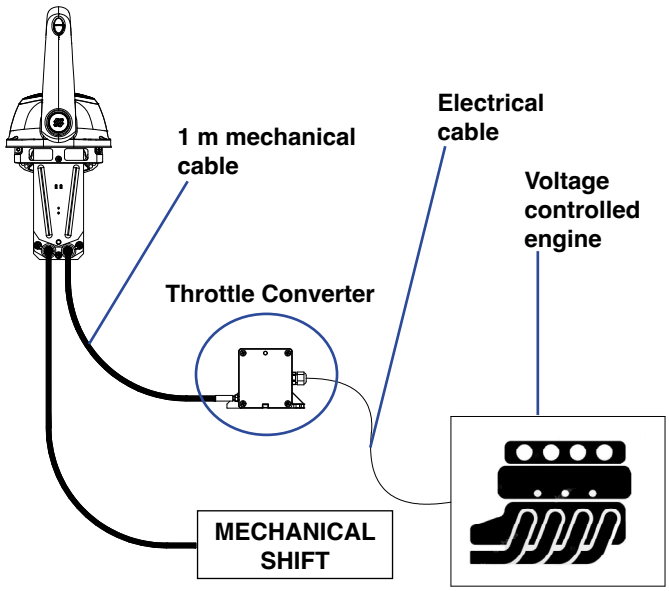

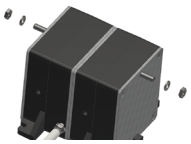

Multiple Throttle Converters assembly for dual engine installations or more

Selector unit for dual station applications

Selector unit for use with single lever controls in dual station applications. It enables indipendent control over throttle and shift from either the main station or the flying bridge station.

NOTE: before changing station, throttle must be on idling position and shift in neutral.

L23 - 1A0031649B - only for inboard and sterndrive engines

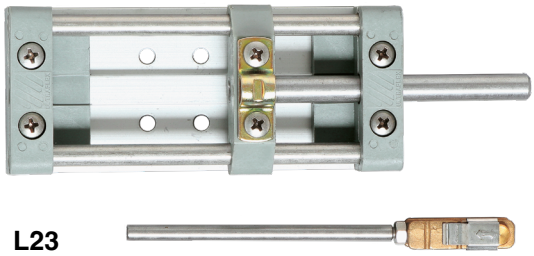

L23

YAMAHA engine kits 2T *

K8 - 1A0030321A for 25 hp engines

K14F - 1A0038098C for 10/15 hp engines

S-2674 - 1A0032654X Yamaha Throttle Connector

S-2675 - 1A0032655Y Yamaha Shift Connector

* Minimun order quantity:
10 pieces for part number



K8



K14F

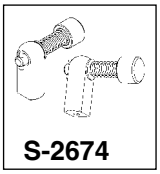

S-2674

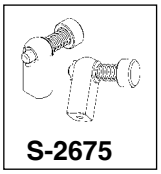

S-2675

Available spare parts

Mechanical products

T67	
Black bezel	6A0059336W
White bezel	6A0059601U
Zinc-chrome steel bushing	6A0056402K
Installation kit	6A0038070K
Shaft kit	6A0070550J
M58	
Lock nut engine side	1A0055170M
T85	
Black bezel	1A0059336W
White bezel	1A0059601U
Shaft kit	1A0070549A
Spent travel nylon tube	1A0059869F
Plastic ferrule for nylon tube	1A0059857Z
Cable lock-in screw	1A0059926R
Installation kit	1A0041165S
T71FC - T72FC - T73NRFC	
90° Black bezel	1A0058051L
90° White bezel	1A0071942H
20° Black bezel	1A0070068H
Shaft kit	1A0070549A
Cable lock-in screw	1A0070022G
Spent travel nylon tube	1A0059869F
Plastic ferrule for nylon tube	1A0059857Z
T91 - T93ZT	
90° Black bezel	1A0058051L
90° White bezel	1A0071942H
20° Black bezel	1A0070068H
Shaft kit	1A0070549A
Cable lock-in screw	1A0074871C
Spent travel nylon tube	1A0059869F
Plastic ferrule for nylon tube	1A0059857Z
X82 - X88 Tilt Mechanisms	
Upper cover	1A0044175L
Lower cover	1A0044176N
Docking clip	1A0044177R
TM87J - TM87O	
Screw kit	1A0077229U
Steering system cap kit	1A0043894R
Steering Wheels	
Stainless steel TS silver screws	1A0060697Q
Stainless steel TS black screws	1A0060698T
Stainless steel TB silver screws	1A0066734W
Black cap for V32	1A0058078Y
White cap for V32	1A0058079Z
Black cap for V33	1A0059763O
White cap for V33	1A0059764P
Black cap for V45	1A0059061O
White cap for V45	1A0059002D
Grey cap for V45	1A0071108Y
Black cap for V38	1A0059061O
White cap for V38	1A0059002D
Black cap for Antigua	1A0070161X
White cap for Antigua	1A0070162Z
Grey cap for Antigua	1A0070163B
Wood cap for V23 and V35	1A0056384G
B301CR - B302CR - B301B - B302B - B322	
Lever assembly with black knob	1A0040897F
Lever assembly with red knob B322	1A0040898H
Black knob	1A0072054G
Red knob	1A0072020N
Chrome rear cover B301CR	1A0071461R
Black painted rear cover B301B	1A0071501A
Gasket for B301CR - B301B	1A0071366X
Gasket for B302CR - B302B - B322	1A0071516P
Installation kit B301	1A0040170D
Installation kit B302	1A0040192P
Installation kit B322	1A0040703N

WARNING
In order to mantain the correct functionality of the product, the replacement with spare parts has to be made by qualified technicians only.

Available spare parts

Mechanical products

B400	
Screw kit	1A0043866K
B501 - B502	
B501 coponents kit	1A0043130G
B502 components kit	1A0043131J
B103 - B104	
Lever with handle	1A0060909N
Black knob	1A0034830001
X55 Silver knob B103/B104	1A0039421V
Gasket for B103	1A0061425E
Gasket for B104	1A0061426G
Rear cover for B103	1A0061738C
Installation kit B103	1A0060979B
Installation kit B104	1A0060804D
B65 - B66 - B73 - B74 - B76 - B77 - B78 - B79	
Lever assembly B66 – B65 – B73 – B74	1A0057076R
Lever assembly with trim B76-B77-B78-B79	1A0057459E
Chrome rear cover	1A0055529Z
Black rear cover	1A0055608X
Installation kit B65	1A0035147J
Installation kit B66	1A0030078K
Installation kit B73	1A0030049F
Installation kit B74	1A0035366S
Installation kit B76	1A0036134F
Installation kit B77	1A0030016Q
Installation kit B78	1A0036135G
Installation kit B79	1A0030017R
B310CH - B310BR - B310B	
Lever assembly B310CH	1A0073158A
Lever assembly B310BR	1A0072119J
Lever assembly B310B	1A0073177E
Screw cover flange B310CH - B310BR - B310B	1A0072110P
Chrome plated external flange B310CH - B310BR - B310B	1A0072108D
Black internal flange B310CH - B310BR - B310B	1A0072109F
Installation kit B310CH - B310BR - B310B	1A0072222B
B183 - B184 - B85	
Lever assembly B183	1A0070013F
Lever assembly B184	1A0070020C
Cover for B183 – B184 – B85	1A0056012A
Flange for B183 – B184 – B85	1A0056011V
Installation kit B183 - B184	1A0041932K
Installation kit B85	1A0036008C
B89 - B90	
Black lever with lock	1A0058245T
White lever with lock	1A0057899L
Installation kit B89 - B90	1A0036168R
B46 - B50 - B58 - B59	
Cover	1A0057960T
Black knob	1A0032394A
Red knob	1A0032472Q
Installation kit	1A0035365R
B99 - B102	
Red knob B99 – B102	1A0058266Y
Black knob B99 – B102	1A0053185V
Installation kit B99 – B102	1A0035391A
B14 Engine Stop Cable	
B14 Kit	1A0059976G
B110 - B120	
Switch with Logo	1A0043644R
Lever assemply B110	1A0043645T
Lever assemply B120	1A0044174J
Flange + seal kit	1A0043646V
Screw kit	1A0043647X
33C cables screw kit	1A0043648Z
B186	
Lever assembly black	1A0044282M
Lever assembly white	1A0044283P
Screw cover flange	1A0044284S
Flange	1A0044285U
Installation kit	1A0041932K

WARNING
In order to mantain the correct functionality of the product, the replacement with spare parts has to be made by qualified technicians only.

Available spare parts

Hydraulic products

B505

Seal kit	3A0043649B
Top and side cover kit	3A0043650K

HELM PUMPS

Vented filler plug kit with valve	3A0040801N
Non vented filler plug kit	3A0040800L
Shaft seal kit from UP25 to UP39	3A0040875V
Shaft seal kit from UP20	3A0042310D
Installation kit for UP20F	3A0042861U
Installation kit for UP20T	3A0042864A
Installation kit for:	
UP25 F/25 F/28 F/33 F/39 F/45 F and UP28-SVS	3A0042862W
Installation kit for UP25T/28T/33T/39T/45T	3A0042864A
Installation kit for UP28R/33R/39R/45R	3A0042863Y
Nylon round flange for X57	3A0070666E
Nylon square flange for X64	3A0042960W
Chrome plated cover ring X68	3A0040894Z
Pump filling kit	3A0042960W

UC81-OBF OUTBOARD CYLINDER

Bull horn mounting bracket	3A0042851R
Through tube stainless steel rod	3A0042852T
Spacer kit	3A0042853V
Tiller arm connecting for UC81	3A0042854X
Replaceable heads kit + Seal kit + Tool kit	3A0043473P

UC94-OBF OUTBOARD CYLINDER (DISCONTINUED)

Black bull horn mounting bracket	3A0042837X
Through tube stainless steel rod	3A0042666W
Spacer kit	3A0040878B
Tiller arm connecting	3A0042838Z
Seal kit for UC94-OBF P. No: 3A0040154F, 3A0040161C	3A0041919U
Tool kit for UC94-OBF P. No: 3A0040154F, 3A0040161C	3A0041920C
Seal kit for UC94-OBF P. No: 3A0042918X, 3A0042968N	3A0043174D
Tool kit for UC94-OBF P. No: 3A0042918X, 3A0042968N	3A0043175F

UC95-OBF OUTBOARD CYLINDER

Black bull horn mounting bracket	3A0042837X
Through tube stainless steel rod	3A0042666W
Spacer kit	3A0040878B
Tiller arm connecting UC95	3A0042838Z
Tool kit for UC95-OBF	3A0043446L
Replaceable heads kit for UC95-OBF	3A0043473P

UC128-OBF OUTBOARD CYLINDER

Black bull horn mounting bracket	3A0043248G
Through tube stainless steel rod	3A0039491T
Spacer kit	3A0041812Z
Plastic cap kit	3A0041810V
UC128 hardware kit (link arm)	3A0039979A
Tiller arm connecting kit (ultrabolt)	3A0040822X
Shaft screws kit	3A0043255D

Replaceable heads kit for UC128-OBF P.No: 3A0043231N, 3A0043232R, 3A0043233T, 3A0043234V, 3A0043235X, 3A0043350X

Tool kit for UC128-OBF P.No: 3A0043231N, 3A0043232R, 3A0043233T, 3A0043234V, 3A0043235X, 3A0043395W

128-SVS OUTBOARD CYLINDER

Tiller arm connecting kit (ultrabolt)	3A0042081R

Tool kit for UC128SVS P.No: 3A0043870A, 3A0043872E, 3A0043871C, 3A0043873G, 3A0043868P

Replaceable heads kit for UC128-SVS P.No: 3A0043870A, 3A0043872E, 3A0043871C, 3A0043873G, 3A0043869S

UC130-SVS OUTBOARD CYLINDER

Tiller arm connecting kit (ultrabolt)	3A0042081R

Replaceable heads kit for UC130-SVS P.No: 3A0043225U, 3A0043226W, 3A0043223P, 3A0043224S, 3A0043364J

Tool kit for UC130-SVS P.No: 3A0043225U, 3A0043226W, 3A0043227Y, 3A0043386V

WARNING
In order to mantain the correct functionality of the product, the replacement with spare parts has to be made by qualified technicians only.

Available spare parts

Hydraulic products

UC120 OUTBOARD CYLINDER	
Replaceable heads kit for UC120	3A0043572S
Tool kit for UC120	3A0043614F
UC68-OBS OUTBOARD CYLINDER	
Stainless steel tilt tube extension	3A0039495B
UC132-OBS OUTBOARD CYLINDER	
Stainless steel tilt tube extension	3A0039495B
Plug	3A0040917J
ZTF	
Replaceable heads kit for UC128-ZTF cylinder	1A0043350X
Tool kit for UC128-ZTF cylinder	1A0043395W
Tilt tube stainless steel rod	1A0042666W
Spacer kit	1A0041812Z
Plastic cap kit	1A0041810X
Engine rod bolt and screw kit	1A0041809L
KIT M2 (Mercury®) mechanical cables	1A0043642L
KIT Y (Yamaha®) mechanical cables	1A0043640G
KIT S2 (Suzuki®) mechanical cables	1A0043641J
KIT ND1-MM (Mercury®)	1A0043636S
KIT ND1-Y (Yamaha®)	1A0043639Y
KIT QU1-Y (Yamaha®)	1A0043638W
KIT QU1-S (Suzuki®)	1A0043637U
Nickel plate plug + o - ring kit	1A0043637U
INBOARD CYLINDERS	
Balljoint for UC69-I	1A0040883U
Balljoint for UC116-I	1A0039477Z
Balljoint for UC168-I and UC215-I	1A0039478B
Balljoint for UC293-I	1A0040178W
Balljoint for UC378-I	1A0041310Y
Balljoint and shim for UC69-I	1A0040884W
Balljoint and shim for UC116-I	1A0039479D
Balljoint and shim for UC168-I and UC215-I	1A0039480M
Balljoint and shim for UC293-I	1A0040180G
Balljoint and shim for UC 378-I	1A0041311A
STERNDRIVE CYLINDERS	
Extension rod connecting pin	1A0040917J
NUT AND SLEEVE	
Brass nut and sleeve	1A0071004K
Nickel plated brass nut and sleeve	1A0071013L

WARNING
In order to mantain the correct functionality of the product, the replacement with spare parts has to be made by qualified technicians only.

ULTRAFLEX S.p.a.

Via Milite Ignoto 8A
16012 Busalla (GE) - Italy
Ph +39 010 96201
uf.marine.sales@ultraflexgroup.it
www.ultraflex.it

ULTRAFLEX GROUP