HANDLES INC.



EXTENDED ROUND LEVER HANDLE

TECHNICAL DATA SHEET



EXTENDED ROUND

LEVER ON ROUND ROSE

Overview:
Sold as a pair with keyhole or cylinder escutcheons, spindle and all necessary fixings.

Base Material:
Stainless Steel

Dimensions:
Handle Length: 150mm / Rose Ø: 50mm

Finish:

SKU: HL048, HL048-BLK

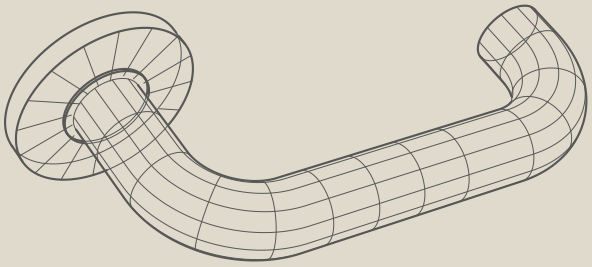

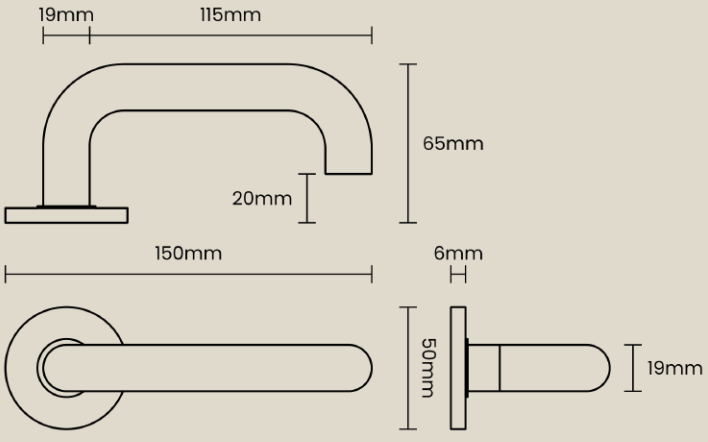

DIMENSIONS